SCOTTISH HOSPITALS INQUIRY

Hearing Commencing 26 February 2024 Bundle 2 - Documentation relating to the ventilation system in 2019

This document may contain Protected Material within the terms of Restriction Order 1 made by the Chair of the Scottish Hospitals Inquiry and dated 26 August 2021. Anyone in receipt of this document should familiarise themselves with the terms of that Restriction Order as regards the use that may be made of this material.

The terms of that Restriction Order are published on the Inquiry website.

Table of Contents

1.	A34225687	Environmental Matrix – 12 September 2017	Page 4
2.	A40165334	Disputed Works Schedule – 28 August 2018	Page 62
3.	A40979097	Email Jackie Sansbury - head virologist re theatre verification – 4 January 2019	Page 65
4.	A35230380	Reprovision Update - 04 February 2019	Page 67
5.	A41213193	IOM issues log – 25 June 2019	Page 68
6.	A35271154	IOM issues log with comments from MPX - 27 June 2019	Page 69
7.	A35054923	Email - single bed ventilation derogation – critical care – 4 July 2019	Page 70
8.	A41213185	Malcolm Thomas Report – 27 July 2019	Page 72
9.	A41213232	John Rayner Ventilation Consultant Report – 09 August 2019	Page 75
10.	A35384824	Arcadis snagging notice – 08 March 2019	Page 84
11.	A35270871	Re-Provision of RHSC and DCN at Little France Section 4.23 Specification – Building Services' dated July 2014	Page 145
12.	A38137161	1.5.21 RHC Edinburgh - Theatre Air Changes & Room Pressures - July 2019	Page 845

13.	A35632180	Mercury Commencement Notice – 18 December 2015	Page 857
14.	A32431743	Contract between HIS Lothian Limited and Brookfield Multiplex Construction Europe Limited – 2015	Page 858
15.	A39975868	General Ward - Ventilation Amendments Proposal – 27 July 2018	Page 1390
16.	A40979123	Email - FW: Theatre Validation -10 May 2019	Page 1394
17.	A40980996	Email chain - RE: Theatre Validation – 10 May 2019	Page 1396
18.	A40981038	Email chain - RE: Theatre Validation – 13 May 2019	Page 1398
19.	A40981181	Email chain - RE: Validation – 20 May 2019	Page 1401
20.	A40981478	Email chain - RE: Independent Validation – 31 May 2019	Page 1404
21.	A35230859	Email chain - RE RHCYP + DCN - Little France - AHU's– URGENT – 21 June 2019	Page 1407
22.	A41213193	PART B 5.1 IOM Issues Log (Initial) – 25 June 2019	Page 1434
23.	A35054886	Spreadsheet - IHS00001477 – 25 June 2019	Page 1435
24.	A35738205	Sch Part 4 Section 3 Reviewable Design Data – 02 February 2015	Page 1437
25.	A35738217	Sch Part 4 Section 4 Room Data Sheets - Environmental Matrix (V7PA) – 30 October 2014	Page 1552
26.	A43542997	TUV SUD Review of Ventilation Provisions for (B1) PICU and HDU Departments July 2019	Page 1577

Royal Hospital for Sick Children and Department for Clinical Neurosciences - Edinburgh

RHSC / DCN RDS Environmental Matrix

Updated to incorporate Board Comments Received 28/08/2017

WW-XX-XX-DC-XXX-001 Rev 10

12th September 2017

Dept Code	Index
~	Cover
~	Guidance Notes
~	Room Function Reference Sheet
~	Occupancy & Equipment Load Allowances
A1 - A4	Front Door - A&E / Assessment Ward
B1	Critical Care / HDU / Neonatal Surgery
C1- C5	RHSC In Patient Pathway / Ward Care
D1 - D10	RHSC Ambulatory Care
E1	Pod
F1	Child and Adolescent Mental Health
G2 - G3	Clinical Support
H1 - H3	Academic
I1 - I2	Facilities / Infrastructure Support Services
J1 - J2	Patient / Family Support
K1 - K2	Family Facilities
L1 - L2	DCN In Patient Pathway / Ward Care
M1- M4	DCN Support Space
N1	DCN Out Patient Departments
P1	Combined Theatres
Q1	Combined Radiology
R1 - R2	Office / Admin Support Services
S1 - S7	Combined Facilities / Infrastructure Support Services
T1	Plant
U1	Shelled Space

Rev 6. The following table indicates Board Comments, initial response together with the Environmental Matrix to reflect the following Board comments

	Item	Initial Response	Feed back	Reconciliation
1	Update the Environmental Matrix shall by updated by Project Co to reflect all the rooms and room types in the proposed Facility, this should be based on an updated Schedule of Accommodation that has been commented on separately by the Board. This also needs to reflect the names and room numbers in the GSU table.	Individual room numbering being applied.	OK	Agreed
2	Include the requirements contained in the Clinical Output Specification including but not limited to the requirement that theatre temperatures are to be able to be raised to 31°C for certain operations.'	We have made reference to the figure of 31°C in the Guidance Notes. 'Theatre temperatures are to be able to be raised to 31°C for certain operations.'	Temperature control in theatres is covered in the Operational Design Notes V5 14th Oct2014 for RHSC Theatres 1 & 2. Operating theatres 1-P1-032 and 1-P1-044 shall operate normally as detailed in the Environmental Matrix. These rooms shall be provided with a manual control to raise the temperature to 31°C within a period of 2 hours. This manual control function shall be logged in the BMS and the temperature requirements of the Environmental Matrix shall not apply for the duration of the elevated temperature operation. THIS HOWEVER IS NOT NOTED ANYWHERE	This statement is now incorporated within the guidance notes of the matrix
3	Measures shall be assessed, modelled and implemented to demonstrate that the internal air temperature of the following room types to reduce the temperature control from 28°C to 25°C- Treatment Rooms, Consulting Rooms; Laboratory; Physiotherapy Studio, Recovery. These room shall not exceed the maximum acceptable level of 25°C for more than 50 hours per annum	The Temp (max) column within the table has been updated to 25°C for the agreed rooms 3.1- 3.5 above.	OK	Agreed
4	Detailed proposal awaited on bedroom ventilation to achieve balanced/ negative pressure relative to corridor.,	The single bedrooms have had their ensuite extract increased to achieve a balance within the room, this has been noted within the matrix.	NOTE 26 AND VENTILATION TYPE HAVE NOT BEEN ALTERED.	Refer to Matrix
5	Colour rendering all stated as 80 where certain areas should be 90	Amended.	NEEDS TO BE CHECKED FOR ALL	Refer to Matrix
6	There also need to have a consistent approach e.g. guidance notes and ED body view room stated as 28 -8, bereavement suite body view room stated as 25 -8.	The figure of 25-8 is now reflected within the matrix.	OK	Matrix now amended. See item 7 below.
7	Further discussion is required on the minimum temperate requirement for the Body View Room.	Awaiting confirmation on this one from the client, however discussion at the meeting on the 11/11/14 was that rather than take the room temperature down to 8°C which would require specialist cooling they would look at providing a cold blanket for the body and room temperatures would be retained as a normal room.	NHSL confirm following discussion with users that the use of a cooling blanket or cooling cot for the body is appropriate and therefore there is no requirement to have the room at 8 degrees and 25°C is acceptable	Matrix amended to minimum temperature of 18°C in place of 8°C.

RHSC & DCN
Environmental Matrix Comments
Second Batch

Wallace Whittle

NHSL Reference	NHSL Comment	Response	Environmental Matrix Status	Drawing Implication	FC Comment	Post FC Comment
1	Technical Submittal MER-XX-SL-TS-015 appears to contradict environmental note 13 by way of radiant panel controls.	Note 13 has been deleted from the matrix and Mercury's technical submittal takes precedent.	Now updated.	✗	✗	✓
2	1-B1-010 medical gas cylinder store, SHTM 02-01 states internal cylinders stores may require mechanical ventilation, please confirm no ventilation provided.	Extract ventilation has been provided. Matrix updated and drawings where appropriate.	Now updated.	✓	✗	✓
3	IPS room max/min temperatures stated as “Manufacturer Dependant”, this is not acceptable, temperatures to be stated. Room has 3ac/h mechanical extract therefore heating type should be Adjacent space transfer air and temperatures accordingly.	Room temperatures have been added. Adjacent space transfer air added into heating type.	Now updated	✗	✗	✓
4A	Isolation cubicles and bedrooms are not shown with any extract ventilation.	Extract rate and note added	Now updated	✗	✗	✓
4B	Gowning lobby, supply stated as “in line with SHPN 04” and extract stated as “To match total bedroom air volume”, design development review required.	Note removed and extract rate added.	Now updated	✗	✗	✓
5	Technical Submittal MER-XX-SL-TS-015 shows room 1-B1-057 with a radiant panel which contradicts Environmental Matrix room 1-B1-057 warm air reheat battery.	The air is heated by a heater battery which is BMS controlled as per the matrix.	No action required	✗	✗	✓
6	Where ventilation rates 10l/s per person are stated, room occupancy to be detailed and ventilation rates calculated.	These particular areas have been designed based on occupancies; occupancy figures and ventilation rates have been added to these areas to provide clarity.	Now updated	✗	✗	✓
7	1-B1-063 Stated as supply air 4ac/h, extract via en-suite, this room does not have en-suite facilities.	Room extract rate added	Now updated	✗	✗	✓
8	1-B1-090 has an area of 8m2 which is not stated in the matrix. PCo to populate areas.	A review will be carried out and any blank GIFA rates will be noted - Updated schedule of accommodation required for this item.	Now updated	✗	✗	✓
9	3-C1.2-036 review ventilation type, only showing supply when 4ac/h supply and extract.	Ventilation type note amended to incorpoarte extract.	Now updated	✗	✗	✓

RHSC & DCN
Environmental Matrix Comments
Second Batch

Wallace Whittle

NHSL Reference	NHSL Comment	Response	Environmental Matrix Status	Drawing Implication	FC Comment	Post FC Comment
10	Room 1-G3-003/005/007 bathroom temperatures stated as 28 / 20 with adjacent space transfer air from area with temperatures of 28 / 18.	These bathrooms have their own radiant panel.	Now updated	✗	✗	✓
11	Similarly isolation bedroom 3-C1.4-040, temperatures stated as 28 / 21 with adjacent space transfer air from area with temperatures of 28 / 18, ventilation described as “balanced”.	The adjacent area; Lobby 3-C1.4-039 is heated via heater battery and will be at least 21°C. Matrix has been updated.	Now updated	✗	✗	✓
12	3-C1.7-003, 004, 005 supply and extract “to suit location” not acceptable.	Air change rates will be noted and the "to suit location" will be removed.	Now updated	✗	✗	✓
13	G-D2-006 supply and extract “to suit location”, statement “to suit location” is not acceptable.	Air change rates will be noted and the "to suit location" will be removed.	Now updated	✗	✗	✓
14	Theatre ventilation stated as “in line with SHTM 03-01”, correct, this is a BCR requirement. However dental surgeries are not mentioned in SHTM 03-01, I would suggest SHPN 36 part 2. The required ventilation to be designed and detailed.	In line with the SHTM 03-01 removed and air change rates added.	Now updated	✗	✗	✓
15	1-H2-021 is currently labelled a single bedroom but it is an isolation room, review ventilation.	This room function was RFI’d and has been designed as an isolation room (matrix has been updated).	Now updated	✗	✗	✓
16	1-P1-003 and 005 are bedrooms, not bathrooms.	Bathroom changed to bedroom.	Now updated	✗	✗	✓
17	Kitchen states DW172 dependant, actual design detail to be added.	Design details will be noted and "DW172" will be removed.	Now updated	✗	✗	✓
18	Complete Estates SOA areas.	A review will be carried out and any blank GIFA rates will be noted.	Now updated	✗	✗	✓
19	Room B-S3-002 and 005 stated in Environmental Matrix as Adjacent Space Transfer Air, however shown with radiant panel on drawing.	Matrix will be updated with radiant panel noted.	Now updated	✗	✗	✓

RHSC & DCN
Environmental Matrix Comments
Second Batch

Wallace Whittle

NHSL Reference	NHSL Comment	Response	Environmental Matrix Status	Drawing Implication	FC Comment	Post FC Comment
20	ADB code reference should be confirmed.	ADB code reference is an unnecessary column for the use of this matrix so the column will be deleted from the environmental matrix.	Now updated	✗	✗	✓
21	Last column not titled. What does it refer to?	This column to the IET grouping but this column has now been superseded by the categorisation document. Column will be deleted from the environmental matrix.	Now updated	✗	✗	✓
22	B-S3-002 & B-S4-001 can min temp be increased to 18?	Temperature will be altered to 18°C	Now updated	✗	✗	✓
23	Disposal hold – can min temp be reduced to 16.	Sensor could be set to 16°C rather than 18°C but the reduction to the maximum temperature from 28°C to 25°C is problematic though so if required, cooling will be need to be added - Confirmed at meeting that 28°C is to be retained.	Now updated	✗	✗	✓
24	During a recent PG it was made clear that due to the nature of the research being carried out in the Clinical Research Department in rooms H2-013, 014, 016 and 020 the temperature cannot at any time exceed 25°C.	Cooling has been provided in H2-014, H2-016 and H2-020. H2-013 requires cooling. Matrix has been updated to reflect this but drawing requires updating.	Environmental Matrix updated and drawing to be updated	✓	✗	✓
25	Further to the recent discussion regarding hepa filtration in the isolation rooms the matrix should have been updated to reflect this.	The matrix doesn't note HEPA filter requirements but all isolation rooms have the capability of HEPA filters being installed.	No action required	✗	✗	✓
26	G-F1 Bedrooms with 6ac/h where most bedrooms are taken as 4ac/h.	This is a CAHMS bedroom so 6 AC/H has been utilised, reference to natural ventilation will be removed.	Now updated	✗	✗	✓
27	B-S4-004, no supply air.	Supply air reference will be added.	Now updated	✗	✗	✓
28	G-S6-016, Cooling - Yes, Cooling Type – None.	Comfort cooled fresh air is now noted.	Now updated	✗	✗	✓
29	G-Q1-007, Cooling – No, Cooling Type - Comfort cooled fresh air.	Cooling note removed.	Now updated	✗	✗	✓

RHSC & DCN
Environmental Matrix Comments
Second Batch

Wallace Whittle

NHSL Reference	NHSL Comment	Response	Environmental Matrix Status	Drawing Implication	FC Comment	Post FC Comment
30	G-Q1-161, Heating type – Adjacent space transfer air, supply at 10 l/s/p positive pressure. Diagnostic rooms, “To suit location”	This room is part of corridor and shares heating and ventilation with corridor.	No action required	✗	✗	✓
31	G-A1-004, supply 4 ac/h extract 3 ac/h positive, different to other diagnostic rooms.	We have treated this room like an office.	No action required	✗	✗	✓
32	Confirm where natural ventilation, i.e. 1-B1-063/065/067.	Extent of ventilation clarified on schedule.	Now updated	✗	✗	✓
33	3-C1.3-018, supply 4 ac/h extract 3 ac/h positive , different to other offices.	Air change rates utilised are in line with cellular offices	No action required	✗	✗	✓
34	1-L1-005 Resus area 30m2 with extract at 3 ac/h.	This room has been updated on the matrix.	Now updated	✗	✗	✓
35	G-A1-028/029, Resus area with central general extract with supply at 10 ac/h extract at 6 ac/h.	Ventilation type for these rooms has been updated in line with design.	Now updated	✗	✗	✓
36	Consider absence detection to all offices, meeting rooms and node rooms.	The lighting control has generally been described in the matrix as either presence or switched. If this is causing confusion the reference to presence could be renamed automatic. As a a general note, automatic detection has been used in all suitable areas.	No action required	✗	✗	✓
37	1-D3-002 Circulation Equipment Storage Bays, all others are presence detection.	Automatic controls added.	Now updated	✗	✗	✓
38	Disposal hold, LG2 recommends 200 lux.	100 lux will be changed to 200 lux.	Now updated	✗	✗	✓
39	IPS rooms normal lux stated as n/a.	200 lux will be added to the matrix.	Now updated	✗	✗	✓

RHSC & DCN
Environmental Matrix Comments
Second Batch

Wallace Whittle

NHSL Reference	NHSL Comment	Response	Environmental Matrix Status	Drawing Implication	FC Comment	Post FC Comment
40	G-F1-028, 030, 053, 045 and 1-L1-028 are described as offices but have local lux of 1000.	Local lux figures to be removed.	Now updated	✗	✗	✓
41	Anaesthetic rooms, LG2 recommends local lux 1000 and Ra 80.	Ra 80 has been noted in the environmental matrix and 1000 lux is for local lighting but 500 lux is for general; all as noted in the environmental matrix.	No action required	✗	✗	✓
42	Theatre exit bays (transfers), LG2 recommends normal lux 300 local lux not required and Ra 80.	500 lux will be dropped to 300 lux, Ra 90 will be reduced to Ra 80 and local lux will be removed.	Environmental Matrix updated and drawings to be updated	✓	✗	✓
43	Preparation rooms and scrub up, LG2 does not require local lux 10,000 – 100,000, or Ra 90.	Ra 90 will be reduced to Ra 80 and local lux will be removed.	Environmental Matrix updated and drawings to be updated	✓	✗	✓
44	Theatre utility rooms, LG2 recommends local lux 100 – 150 and does not require local lux 10,000 – 100,000, or Ra 90.	500 lux will be dropped to 150 lux, RA 90 will be reduced to Ra 80 and local lux will be removed.	Environmental Matrix updated and drawings to be updated	✓	✗	✓
45	Recovery areas, LG2 does not require local lux 1000 but does recommend Ra90.	RA 80 will be increased to Ra 90 and local lux will be removed.	Environmental Matrix updated and drawings to be updated	✓	✗	✓
46	Nurse/touchdown bases not shown to have night lighting, confirm this achieved by dimming.	All night lighting is achieved by dimmable fittings.	No action required	✗	✗	✓
47	Resus trolley bay 1-D1-009 to be as other trolley bays, Ra 80 and presence detection.	1-D1-009 will be updated to reflect other trolley bays.	To be updated	✗	✗	✓
48	Review colour rendering, e.g. theatre suite, prep, anaesthetic, scrub utility, exit bay all Ra 80. Review consult/ examination rooms to have the higher colour rendering of Ra 90. All to be as CIBSE LG2.	RA 90 is currently shown in theatres, preparation rooms, scrub rooms, utility rooms and exit bay. Anaesthetic room will be changed to Ra90 from Ra80. We feel that the consultant room are general treatment rooms so should remain as Ra80; where Ra90 is required, it will be achieved via the examination luminaire.	Environmental Matrix updated and drawings to be updated	✓	✗	✓
49	No absence detection or daylight control detailed included from drawings.	The lighting control has generally been described in the matrix as either presence or switched. If this is causing confusion the reference to presence could be renamed automatic. As a a general note, automatic detection has been used in all suitable areas.	No action required	✗	✗	✓

RHSC & DCN
Environmental Matrix Comments
Second Batch

Wallace Whittle

NHSL Reference	NHSL Comment	Response	Environmental Matrix Status	Drawing Implication	FC Comment	Post FC Comment
50	Medical location column states “See Guidance Notes” for every entry and not mentioned in those guidance notes.	This has been superseded by the risk profile document which sets out the medical grouping and classification. Column has been removed.	Now updated	✗	✗	✓

Environmental Matrix - Guidance Notes

1 This workbook is prepared for the Financial Close Stage as an easier reference tool to replace ADB RDS M&E Sheets for the Environmental Criteria elements as described on these sheets.

2 The services matrices are produced from the Schedule of Accommodation Sheets.

3 The design of the HVAC systems to the theatres shall be in accordance with SHTM 03-01.

4 Where radiant panels are indicated in any room in these matrices, detailed design development may remove the need for these without detriment to environmental temperature. This design development is dependant on actual room layout - i.e. whether a room is located adjacent to an external wall, ground bearing floor, roof surface or is internal.

5 Ventilation air change rates and the use of natural ventilation in Patient Areas shall be reviewed throughout the detail design process to ensure a maximum internal temperature of 25°C (dry bulb) is not exceeded during normal occupancy. This criteria shall also apply to cellular and open plan office spaces.

6 Maximum internal temperatures listed relate to normal occupancy and Summer Design Conditions ; External Summer Conditions for Cooling Plant Selection as per SHTM2025,Enthalpy 54kJ/kgda.26deg°Cdb,19deg°C wb. External Winter Conditions as per CIBSE Guide A Table A 2.2 for locality = - 6°C for Heat Losses, and as SHTM 2025 for locality = -10°C for AHU Ventilation Plant design.

7 Examination lamp notes where listed are provisional. Detailed requirements (fixed, mobile, illumination) will be detailed on C sheets as agreed from signed off 1:50 RDS, which shall take precedence over this schedule.

8 All lighting levels are derived from CIBSE Lighting Guide LG2.

9 Colour rendering refers to CIBSE Lighting Design Guide and will be applied throughout.

"80" : Normal
"90" - Enhanced to provide close as possible match to natural light for clinical purposes

10 Thermostatic Mixing Devices - SHTM 04-01 Guidance shall be employed for specific TRV Type versus listed Area/Activity.

11 Standby Lighting to be Grade A throughout .

12 The internal temperature in naturally or mechanically ventilated rooms shall not exceed the maximum temperature as listed on these Environmental Matrices provided external summer design criteria is not exceeded .

13 Note Deleted

14 Local Control BMS Temperature Sensors for ducted reheat zones and chilled water cassettes for hotspots shall be provided with local range adjustment to +/- 2°C of BMS Set Point. BMS set point shall be adjustable via operator/user dialogue through formal FM

15 **Typical bedroom** - Design Criteria - SHTM 03-01 Clause 2.11 - internal temperatures in patient areas should not exceed 28°C db for more than 50 hrs per year. Appendix 1 SHTM 03-01 gives 18°C to 28°C float range. NHSL however require that the maximum internal design temperature should not exceed 25°C for more than 50 hrs per year.

HDU bed areas - Design Criteria - HBN 57 gives specific guidance as well as SHTM 03-01 - Appendix 1 for air change rates - 10ac/hr Supply, 18°C to 25°C control range. (Capability shall be provided but not at the summer and winter external ambient design extremes against the internal maximum and minimum range conditions).

The department will be comfort cooled and controlled on a zonal basis.

Central AHU to be provided with blank section for future provision of humidification.

Post theatre recovery areas - Design Criteria - SHTM 03-01 - Appendix 1 for air change rates - 15ac/hr S&E , 18°C to 25°C control range.(Capability shall be provided but not at the summer and winter external ambient design extremes against the maximum and minimum range conditions).

Critical Care areas - Design Criteria - SHTM 03-01 - Appendix 1 for air change rates - 10ac/hr Supply for isolation cubicles , 18°C to 25°C control range.(Capability shall be provided but not at the summer and winter external ambient design extremes against the maximum and minimum range conditions). NHSL may require specific rooms to have a control range up to 28°C.

Central AHU to be provided with blank section for future provision of humidification.

16 **Corridor** ventilation may be either mechanical or where the opportunity exists natural. To be determined during detailed design with due regard to clinical functionality.

17 **Single Room WC** - SHTM 03-01 Appendix 1 suggests 3ac/hr extract air change rate only. We have applied 10ac/hr extract rate to provide a more robust rate of extract.

18 **Diagnostic Rooms** - (X Ray, CT Scanner, MRI Scanners, Gamma Camera) - air change rates listed at 8ac/hr. Actual air change rate must be derived through room heat gain analysis and actual equipment guidance.

19 **Operating Theatre Laminar Flow/UCV Requirements -** Refer to Operational Policy Documents for specific theatres which require Laminar Flow/UCV canopy style ventilation solution.

Central AHU to be provided with blank section for future provision of humidification.

Operating Theatres 1-P1-032 and 1-P1-044 shall operate normally as detailed in the Environmental Matrix. These rooms shall be provided with a manual control to raise the temperature to 31°C within a period of 2 hours. This manual control function shall be logged on the BMS and the temperature requirements of the Environmental Matrix shall not apply for the duration of the elevated temperature operation.

20 **Small workshop Areas -** Local Extract Ventilation (LEV) unit requirement to be determined from room equipment schedules.

21 **Note that Isolation Suite ventilation solutions for this project shall follow HBN 4 Supplement 1 Section 4 Item 4.8 Guidance i.e.**
A common departmental AHU shall be employed to provide supply air ventilation (and shall therefore employ duty & standby fans).
Isolation Rooms En Suite Extracts shall be provided with an independent Isolation Room toilet extract ventilation system.
Isolation Rooms En Suite Extracts shall be provided with either externally located 3 mtr high discharge stack in a safe location or with extract filters (H14) within a safe change housing outside the building on the suction side of the fan.
Heating & Cooling the Isolation Suites shall be provided via the ventilation system.

22 **Retail Provision -** Service provisions listed are Infrastructure only for future fit-out by retailer. (Fire detection shall be provided to assist completion).

23 **Comfort Cooled Fresh Air -** Where noted as such on the matrix, these are provided via departmental air handling plant via chilled water cooling coils.

24 **Body View Room -** A cooling blanket or cooling cot shall be used in this room.

25 Anti ligature rooms (17no. off) will be treated as sealed rooms with Supply at 6ac/hr and Extract to match to achieve a balanced pressure.

26 **Single Bedroom -** The design philosophy for ventilation is for a mixed mode operation where natural vent is encouraged which has benefits both physiological with users being partly in control, and from an energy stand point where mechanical vent loading is partly reduced (2/3rds). This strategy results in zero pressure differential regime within the room where supply and extract is balanced.
En suite dirty extract volume flow rate has been increased to achieve a balanced ventilation system.

27 **Offices** have been noted as being 400Lux however have the ability through the KNX system to be dimmed to 300Lux

Room No.	Room Name	Qty	Room Function	Temp (max)	Temp (min)	Heating Type	Heating Control	Cooling (present)	Cooling (type)	Ventilation (type)	Supply (ac/hr)	Extract (ac/hr)	Relative pressure	Min filtration	Surface temp	Water temp	Normal lux	Night lux	Local lux	Standby grade	Colour render	Control	Plane
G-A1-002	Disposal Hold	1	Disposal Hold	28	16	Adjacent Space Transfer Air	None	No	None	Central Dirty Extract	0	6	Negative	None	n/a	n/a	200	n/a	None	A	80	Automatic Controls	Floor 0m
G-A1-003	Store - Medical Gas Cylinders	1	Storage Area Med Gas	28	16	Adjacent Space Transfer	None	No	None	Central General Extract	0	7	Negative	None	n/a	n/a	200	n/a	None	A	80	Automatic Controls	Floor 0m
G-A1-004	Processing Room	1	Diagnostic room	25	18	Radiant Panels	Remote Adjustable Sensor	Yes	Ceiling Cassette - Chilled Water	Central Supply and Extract	3 people at 10 l/s per person (4ach)	3 people at 10 l/s per person (4ach)	Balanced	F7	43	n/a	300	n/a	1000	A	80	Switch / Dimmer	General working plane 1m
G-A1-005	Changing Cubicles	1	Changing Facilities	28	18	Radiant Panels	Remote Sensor Adj.	Yes	Comfort Cooled Fresh Air	Central Supply and Extract	5	4	Positive	F7	43	n/a	100	n/a	None	A	80	Automatic Controls	Floor 0m
G-A1-006	General X-Ray Room	1	Diagnostic room	25	18	Warm Air - Reheat Battery	BMS Adjustable Sensor	Yes	By Specialist	Central Supply and Extract	8	8	Balanced	F7	43	41	300	n/a	1000	A	80	Switch / Dimmer	General working plane 1m
G-A1-007	Dirty Utility	1	Dirty utility	28	18	Radiant Panels	Remote Adjustable Sensor	No	None	Isolation Bedroom	0	6	Negative	None	43	41	200	n/a	None	A	80	Automatic Controls	Floor 0m
G-A1-008	Washdown Room	1	Dirty utility	28	18	Radiant Panels	Remote Adjustable Sensor	No	None	Central Dirty Extract	0	6	Negative	None	43	41	200	n/a	None	A	80	Automatic Controls	Floor 0m
G-A1-009	WC - Wheelchair accessible	1	Toilet	28	18	Adjacent Space Transfer	None	No	None	Central Dirty Extract	0	10	Negative	None	n/a	41	200	n/a	None	A	80	Automatic Controls	Floor 0m
G-A1-010	Laboratory - Near Patient Testing / Status	1	Laboratory	25	18	Radiant Panels	Remote Sensor Adj.	Yes	Ceiling Cassette - Chilled Water	Central Supply and Extract	6	6	Balanced	F7	43	60	500	n/a	None	A	80	Switch	General working plane 1m
G-A1-011	Linen Bay (1 Trolley)	1	Linen Bay	28	16	Adjacent Space Transfer	None	No	None	None	0	0	n/a	None	n/a	n/a	100 (KNX)	n/a	None	A	80	Automatic Controls	Floor 0m
G-A1-012	Treatment Room 5: Dual Access	1	Treatment Room	25	18	Radiant Panels	Remote Sensor Adj.	Yes	Ceiling Cassette - Chilled Water	Central Supply Air	10	0	Positive	F7	43	41	500	n/a	1000	A	90	Switch	Bed / Trolley 1.45m
G-A1-013	Treatment Room 10: Dual Access	1	Treatment Room	25	18	Radiant Panels	Remote Sensor Adj.	Yes	Ceiling Cassette - Chilled Water	Central Supply Air	10	0	Positive	F7	43	41	500	n/a	1000	A	90	Switch	Bed / Trolley 1.45m
G-A1-014	Treatment Room 6: Dual Access	1	Treatment Room	25	18	Radiant Panels	Remote Sensor Adj.	Yes	Ceiling Cassette - Chilled Water	Central Supply Air	10	0	Positive	F7	43	41	500	n/a	1000	A	90	Switch	Bed / Trolley 1.45m
G-A1-015	Treatment Room 11: Dual Access (Mental Health)	1	Treatment Room	25	18	Radiant Panels	Remote Sensor Adj.	Yes	Ceiling Cassette - Chilled Water	Central Supply Air	10	0	Positive	F7	43	41	500	n/a	1000	A	90	Switch	Bed / Trolley 1.45m
G-A1-016	Staff & Communication Base	1	Reception	28	18	Radiant Panels	Remote Sensor Adj.	No	None	Central Supply and Extract	4 people at 10 l/s per person (4ach)	4 people at 10 l/s per person (4ach)	Balanced	F7	43	n/a	300	n/a	None	A	80	Switch	Desk 0.75 to 0.85m
G-A1-017	Store - Dispensing Drugs	1	Storage Area Equipment	28	16	Adjacent Space Transfer Air	None	No	None	Central General Extract	0	3	Negative	None	n/a	n/a	200	n/a	None	A	80	Automatic Controls	Floor 0m
G-A1-018	Treatment Room 7: Dual Access	1	Treatment Room	25	18	Radiant Panels	Remote Sensor Adj.	Yes	Ceiling Cassette - Chilled Water	Central Supply Air	10	0	Positive	F7	43	41	500	n/a	1000	A	90	Switch	Bed / Trolley 1.45m
G-A1-019	Treatment Room 12: Dual Access	1	Treatment Room	25	18	Radiant Panels	Remote Sensor Adj.	Yes	Ceiling Cassette - Chilled Water	Central Supply Air	10	0	Positive	F7	43	41	500	n/a	1000	A	90	Switch	Bed / Trolley 1.45m
G-A1-020	Treatment Room 8: Dual Access	1	Treatment Room	25	18	Radiant Panels	Remote Sensor Adj.	Yes	Ceiling Cassette - Chilled Water	Central Supply Air	10	0	Positive	F7	43	41	500	n/a	1000	A	90	Switch	Bed / Trolley 1.45m
G-A1-021	Treatment Room 13: Dual Access	1	Treatment Room	25	18	Radiant Panels	Remote Sensor Adj.	Yes	Ceiling Cassette - Chilled Water	Central Supply Air	10	0	Positive	F7	43	41	500	n/a	1000	A	90	Switch	Bed / Trolley 1.45m
G-A1-022	Treatment Room 9: Dual Access	1	Treatment Room	25	18	Radiant Panels	Remote Sensor Adj.	Yes	Ceiling Cassette - Chilled Water	Central Supply Air	10	0	Positive	F7	43	41	500	n/a	1000	A	90	Switch	Bed / Trolley 1.45m
G-A1-023	Supplies Base	1	Storage Area Equipment	28	16	Radiant Panels	Remote Sensor Adj.	No	None	Central General Extract	0	3	Negative	None	43	n/a	200	n/a	None	A	80	Automatic Controls	Floor 0m
G-A1-025	Treatment Room 14: Dual Access	1	Treatment Room	25	18	Radiant Panels	Remote Sensor Adj.	Yes	Ceiling Cassette - Chilled Water	Central Supply Air	10	0	Positive	F7	43	41	500	n/a	1000	A	90	Switch	Bed / Trolley 1.45m
G-A1-026	Main Entrance Draught Lobby	1	Circulation Areas - Entrance Lobby	28	Not Controlled	Warm Air Door Curtain	BMS Adjustable Sensor	No	None	None	0	0	n/a	None	43	n/a	200	n/a	None	A	80	Automatic Controls	Floor 0m
G-A1-028	Resuscitation Room: 2 places	1	Resuscitation Bay	25	21	Radiant Panels	Remote Adjustable Sensor	Yes	Wall Mounted Unit	Central Supply and Extract	15	15	Balanced	F7	43	41	500	n/a	None	A	80	Switch	Bed / Trolley 1.45m
G-A1-029	Resuscitation Room: 2 places	1	Resuscitation Bay	25	21	Radiant Panels	Remote Adjustable Sensor	Yes	Wall Mounted Unit	Central Supply and Extract	15	15	Balanced	F7	43	41	500	n/a	None	A	80	Switch	Bed / Trolley 1.45m
G-A1-030	IPS Room	1	IPS Room	30	18	Adjacent Space Transfer Air	None	No	None	Central General Extract	0	3	Negative	None	n/a	n/a	200	n/a	None	A	80	Automatic Controls	Floor 0m
G-A1-031	Body Viewing Room	1	Body View	25	18	Radiant Panels	Remote Sensor Adj.	Yes	Ceiling Cassette - Chilled Water	Central Supply and Extract	4	6	Negative	F7	43	41	100 (KNX)	n/a	None	A	80	Switch / Dimmer	Floor 0m
G-A1-032	Sitting Room	1	Common room/staff room/lounge	28	18	Radiant Panels	Remote Sensor Adj.	Yes	Comfort Cooled Fresh Air	Central Supply and Extract	6	8	Negative	F7	43	41	300	n/a	None	A	80	Switch	Floor 0m
G-A1-033	WC - Wheelchair accessible	1	Toilet	28	18	Radiant Panels	Remote Sensor Adj.	No	None	Central Dirty Extract	0	10	Negative	None	43	41	200	n/a	None	A	80	Automatic Controls	Floor 0m
G-A1-034	Store - Major Incident / Ambulance Equipment	1	Storage Area Equipment	28	16	Adjacent Space Transfer Air	None	No	None	Central General Extract	0	3	Negative	None	n/a	n/a	200	n/a	None	A	80	Automatic Controls	Floor 0m
G-A1-035	Triage Room	1	Treatment Room	25	18	Radiant Panels	Remote Sensor Adj.	Yes	Wall Mounted Unit	Central Supply Air	10	0	Positive	F7	43	41	300	n/a	1000	A	90	Switch	Bed / Trolley 1.45m
G-A1-036	Reception:2 staff	1	Reception	28	18	Radiant Panels	Remote Sensor Adj.	Yes	Ceiling Cassette - Chilled Water	Central Supply and Extract	2 people at 10 l/s per person (2ach)	2 people at 10 l/s per person (2ach)	Balanced	F7	43	n/a	300	n/a	None	A	80	Switch	Desk 0.75 to 0.85m
G-A1-037	Parking Bay: 6 wheelchairs	1	Circulation Equipment Storage Bays	28	16	Adjacent Space Transfer Air	None	No	None	Central General Extract	0	3	Negative	None	n/a	n/a	200	n/a	None	A	80	Automatic Controls	Floor 0m
G-A1-038	Main Entrance Draught Lobby	1	Circulation Areas - Entrance Lobby	28	Not Controlled	Warm Air Door Curtain	BMS Adjustable Sensor	No	None	Central General Extract	0	3	Negative	None	43	n/a	200	n/a	None	A	80	Automatic Controls	Floor 0m
G-A1-039	Parking Bay: 3 accident trolleys & 3 wheelchairs	1	Circulation Equipment Storage Bays	28	16	Adjacent Space Transfer Air	None	No	None	Central General Extract	0	3	Negative	None	n/a	n/a	200	n/a	None	A	80	Automatic Controls	Floor 0m
G-A1-040	Store - Equipment & Supplies	1	Storage Area Equipment	28	16	Adjacent Space Transfer Air	None	No	None	Central General Extract	0	3	Negative	None	n/a	n/a	200	n/a	None	A	80	Automatic Controls	Floor 0m
G-A1-041	WC - Wheelchair accessible	1	Toilet	28	18	Radiant Panels	Remote Sensor Adj.	No	None	Central Dirty Extract	0	10	Negative	None	43	41	200	n/a	None	A	80	Automatic Controls	Floor 0m
G-A1-042	WC - Wheelchair accessible	1	Toilet	28	18	Adjacent Space Transfer Air	None	No	None	Central Dirty Extract	0	10	Negative	None	n/a	41	200	n/a	None	A	80	Automatic Controls	Floor 0m
G-A1-043	Female Staff Changing and Lockers: 30 places	1	Changing Facilities	28	18	Radiant Panels	Remote Sensor Adj.	Yes	Comfort Cooled Fresh Air	Central Supply and Extract	5	4	Positive	F7	43	41	100	n/a	None	A	80	Automatic Controls	Floor 0m
G-A1-044	Staff Shower: ambulant	1	Bathroom	28	20	Adjacent Space Transfer Air	None	No	None	Central Dirty Extract	0	10	Negative	None	n/a	41	200	n/a	None	A	80	Automatic Controls	Floor 0m
G-A1-045	Waiting Area inc Play Area	1	Waiting Room	28	18	Radiant Panels	Remote Sensor Adj.	Yes	Comfort Cooled Fresh Air	Central Supply and Extract	36 people at 10 l/s per person (8ach)	36 people at 10 l/s per person (8ach)	Balanced	F7	43	n/a	300	n/a	None	A	80	Switch	Floor 0m
G-A1-046	Baby Infant / Feeding Room	1	baby Feeding	28	18	Radiant Panels	Remote Sensor Adj.	No	None	Central Dirty Extract	0	10	Negative	None	43	41	100	n/a	None	A	80	Switch	Floor 0m
G-A1-047	Nappy Change	1	Nappy Change	28	18	Radiant Panels	Remote Sensor Adj.	No	None	Central Dirty Extract	0	10	Negative	None	43	41	100	n/a	None	A	80	Automatic Controls	Floor 0m
G-A1-048	Male Staff Changing Room and Lockers: 20 places	1	Changing Facilities	28	18	Radiant Panels	Remote Sensor Adj.	Yes	Comfort Cooled Fresh Air	Central Supply and Extract	5	4	Positive	F7	43	41	100	n/a	None	A	80	Automatic Controls	Floor 0m
G-A1-049	Staff Shower: ambulant	1	Bathroom	28	20	Adjacent Space Transfer Air	None	No	None	Central Dirty Extract	0	10	Negative	None	n/a	41	200	n/a	None	A	80	Automatic Controls	Floor 0m
G-A1-050	Consultant Office (6 person)	1	Cellular / Ward Offices	28	18	Radiant Panels	Remote Sensor Adj.	Yes	Ceiling Concealed Cassette Unit	Central Supply and Extract	4	3	Positive	F7	43	n/a	400	n/a	None	A	80	Switch	Desk 0.75 to 0.85m
G-A1-052	Ward Manager's Office	1	Cellular / Ward Offices	28	18	Radiant Panels	Remote Sensor Adj.	Yes	Ceiling Concealed Cassette Unit	Central Supply and Extract	4	3	Positive	F7	43	n/a	400	n/a	None	A	80	Switch	Desk 0.75 to 0.85m

Room No.	Room Name	Qty	Room Function	Temp (max)	Temp (min)	Heating Type	Heating Control	Cooling (present)	Cooling (type)	Ventilation (type)	Supply (ac/hr)	Extract (ac/hr)	Relative pressure	Min filtration	Surface temp	Water temp	Normal lux	Night lux	Local lux	Standby grade	Colour render	Control	Plane
G-A1-053	Interview/Meeting Room: 6 persons	1	Meeting Room	25	18	Radiant Panels	Remote Sensor Adj.	Yes	Ceiling Cassette - Chilled Water	Central Supply and Extract	6 people at 10 l/s per person (9ach)	6 people at 10 l/s per person (9ach)	Balanced	F7	43	n/a	300	n/a	None	A	80	Switch	Desk 0.75 to 0.85m
G-A1-054	Beverage Bay	1	Tea Making	28	18	Adjacent Space Transfer	None	No	None	None	0	0	n/a	None	n/a	41	100 (KNX)	n/a	None	A	80	switch	Floor 0m
G-A1-055	WC - Staff	1	Toilet	28	18	Adjacent Space Transfer Air	None	No	None	Central Dirty Extract	0	10	Negative	None	n/a	41	200	n/a	None	A	80	Automatic Controls	Floor 0m
G-A1-056	DSR	1	DSR	28	18	Adjacent Space Transfer Air	None	No	None	Central Dirty Extract	0	6	Negative	None	n/a	60	100	n/a	None	A	80	Automatic Controls	Floor 0m
G-A1-057	Medical Staff / Audit / Secy Office (3 Person)	1	Cellular / Ward Offices	28	18	Radiant Panels	Remote Sensor Adj.	Yes	Ceiling Cassette - Chilled Water	Central Supply and Extract	4	3	Positive	F7	43	n/a	400	n/a	None	A	80	Switch	Desk 0.75 to 0.85m
G-A1-058	WC - Staff	1	Toilet	28	18	Adjacent Space Transfer Air	None	No	None	Central Dirty Extract	0	10	Negative	None	n/a	41	200	n/a	None	A	80	Automatic Controls	Floor 0m
G-A1-059	Store - Stock & Sterile Supplies	1	Storage Area Equipment	28	16	Adjacent Space Transfer Air	None	No	None	Central General Extract	0	3	Negative	None	n/a	n/a	200	n/a	None	A	80	Automatic Controls	Floor 0m
G-A1-060	Treatment Room 3: Single Access	1	Treatment Room	25	18	Radiant Panels	Remote Sensor Adj.	Yes	Ceiling Cassette - Chilled Water	Central Supply Air	10	0	Positive	F7	43	41	500	n/a	1000	A	90	Switch	Bed / Trolley 1.45m
G-A1-061	Treatment Room 4: Single Access	1	Treatment Room	25	18	Radiant Panels	Remote Sensor Adj.	Yes	Ceiling Cassette - Chilled Water	Central Supply Air	10	0	Positive	F7	43	41	500	n/a	1000	A	90	Switch	Bed / Trolley 1.45m
G-A1-062	Treatment Room 2: Single Access	1	Treatment Room	25	18	Radiant Panels	Remote Sensor Adj.	Yes	Ceiling Cassette - Chilled Water	Central Supply Air	10	0	Positive	F7	43	41	500	n/a	1000	A	90	Switch	Bed / Trolley 1.45m
G-A1-063	Pantry - Staff / Patient	1	Pantry	28	18	Adjacent Space Transfer Air	None	Yes	Comfort Cooled Fresh Air	Central Supply and Extract	6	8	Negative	F7	n/a	41	300	n/a	None	A	80	Switch	Floor 0m
G-A1-064	Treatment Room: Single Access	1	Treatment Room	25	18	Radiant Panels	Remote Sensor Adj.	Yes	Ceiling Cassette - Chilled Water	Central Supply Air	10	0	Positive	F7	43	41	500	n/a	1000	A	90	Switch	Bed / Trolley 1.45m
G-A1-065	Store - Plaster	1	Storage Area Equipment	28	16	Adjacent Space Transfer Air	None	No	None	Central General Extract	0	3	Negative	None	n/a	n/a	200	n/a	None	A	80	Automatic Controls	Floor 0m
G-A1-066	Plaster Suite (2 bays)	1	Plaster Suite (2 bays)	25	18	Radiant Panels	Remote Sensor Adj.	Yes	Comfort Cooled Fresh Air	Central Supply and Extract	7	7	Balanced	F7	43	41	300	n/a	1000	A	80	Switch	Bed / Trolley 1.45m
G-A1-067	WC - Wheelchair accessible	1	Toilet	28	18	Adjacent Space Transfer Air	None	No	None	Central Dirty Extract	0	10	Negative	None	n/a	41	200	n/a	None	A	80	Automatic Controls	Floor 0m
G-A1-072	Mobile X-Ray Bay	1	Mobile X Ray Bay	28	18	Adjacent Space Transfer	None	No	None	None	0	0	n/a	None	n/a	41	200	n/a	None	A	80	Automatic Controls	Floor 0m
G-A1-001	Corridor	1	Corridor	28	18	Radiant Panels	Remote Sensor Adj.	No	None	None	0	0	n/a	None	43	n/a	200	n/a	None	A	80	Automatic Controls	Floor 0m
G-A1-001A	Corridor	1	Corridor	28	18	Adjacent Space Transfer	None	No	None	None	0	0	n/a	None	n/a	n/a	200	n/a	None	A	80	Automatic Controls	Floor 0m
G-A1-001B	Corridor	1	Corridor	28	18	Adjacent Space Transfer	None	No	None	None	0	0	n/a	None	n/a	n/a	200	n/a	None	A	80	Automatic Controls	Floor 0m
G-A1-024	Corridor	1	Corridor	28	18	Radiant Panels	Remote Sensor Adj.	No	None	Central General Extract	0	11	Negative	None	43	n/a	200	n/a	None	A	80	Automatic Controls	Floor 0m
G-A1-027	Corridor	1	Corridor	28	18	Radiant Panels	Remote Sensor Adj.	No	None	Central General Extract	0	4	Negative	None	43	n/a	200	n/a	None	A	80	Automatic Controls	Floor 0m
G-A1-051	Corridor	1	Corridor	28	18	Radiant Panels	Remote Sensor Adj.	No	None	None	0	0	n/a	None	43	n/a	200	n/a	None	A	80	Automatic Controls	Floor 0m
G-A1-068	Corridor	1	Corridor	28	18	Radiant Panels	Remote Sensor Adj.	No	None	None	0	0	n/a	None	43	n/a	200	n/a	None	A	80	Automatic Controls	Floor 0m
G-A1-069	Draught Lobby	1	Draught Lobby	28	Not Controlled	Warm Air Door Curtain	BMS Adjustable Sensor	No	None	None	0	0	n/a	None	43	n/a	200	n/a	None	A	80	Automatic Controls	Floor 0m
G-A1-070	Switch Cupboard	1	Switch Cupboard	Not Controlled	Not Controlled	None	None	No	None	None	0	0	n/a	None	n/a	n/a	100	n/a	None	A	80	Automatic Controls	Floor 0m
G-A1-071	Switch Cupboard	1	Switch Cupboard	Not Controlled	Not Controlled	None	None	No	None	None	0	0	n/a	None	n/a	n/a	100	n/a	None	A	80	Automatic Controls	Floor 0m
G-A2-002	Single Bedroom 15 (RHSC)	1	Bedroom	28	18	Radiant Panels	Remote Sensor Adj.	Yes	Ceiling Cassette - Chilled Water	Natural & Central Supply Air	4	via ensuite	Balanced	F7	43	41	100	5	300	A	80	Switch / Dimmer	Bed / Trolley 1.45m
G-A2-003	En-suite wheelchair-accessible WC, Shower & wash	14	Bathroom	28	20	Adjacent Space Transfer Air	None	No	None	Central Dirty Extract	0	Minimum 10	Negative	None	n/a	41	200	n/a	None	A	80	Automatic Controls	Floor 0m
G-A2-004	Single Bedroom 19 (RHSC)	1	Bedroom	28	18	Radiant Panels	Remote Sensor Adj.	Yes	Ceiling Cassette - Chilled Water	Natural & Central Supply Air	4	via ensuite	Balanced	F7	43	41	100	5	300	A	80	Switch / Dimmer	Bed / Trolley 1.45m
G-A2-005	En-suite wheelchair-accessible WC, Shower & wash	1	Bathroom	28	20	Adjacent Space Transfer Air	None	No	None	Central Dirty Extract	0	Minimum 10	Negative	None	n/a	41	200	n/a	None	A	80	Automatic Controls	Floor 0m
G-A2-006	Single Bedroom 16 (RHSC)	1	Bedroom	28	18	Radiant Panels	Remote Sensor Adj.	Yes	Ceiling Cassette - Chilled Water	Natural & Central Supply Air	4	via ensuite	Balanced	F7	43	41	100	5	300	A	80	Switch / Dimmer	Bed / Trolley 1.45m
G-A2-007	En-suite wheelchair-accessible WC, Shower & wash	1	Bathroom	28	20	Radiant Panels	Remote Sensor Adj.	No	None	Central Dirty Extract	0	Minimum 10	Negative	None	43	41	200	n/a	None	A	80	Automatic Controls	Floor 0m
G-A2-008	Reception/Staff Base	1	Reception	28	18	Radiant Panels	Remote Sensor Adj.	Yes	Ceiling Cassette - Chilled Water	Central Supply and Extract Air	2 people at 10l/s/per person (5ach)	2 people at 10l/s/per person (5ach)	Balanced	F7	43	n/a	300	n/a	None	A	80	Automatic Controls	Desk 0.75 to 0.85m
G-A2-009	Single Bedroom 20 (RHSC)	1	Bedroom	28	18	Radiant Panels	Remote Sensor Adj.	Yes	Ceiling Cassette - Chilled Water	Natural & Central Supply Air	4	via ensuite	Balanced	F7	43	41	100	5	300	A	80	Switch / Dimmer	Bed / Trolley 1.45m
G-A2-010	En-suite wheelchair-accessible WC, Shower & wash	1	Bathroom	28	20	Radiant Panels	Remote Sensor Adj.	No	None	Central Dirty Extract	0	Minimum 10	Negative	None	43	41	200	n/a	None	A	80	Automatic Controls	Floor 0m
G-A2-011	Touchdown Base 4	4	staff base	28	18	Radiant Panels	Remote Sensor Adj.	No	None	None	0	0	n/a	n/a	43	n/a	200/300	n/a	1000	A	80	Switch / Dimmer	Desk 0.75 to 0.85m
G-A2-012	Single Bedroom 17 (RHSC)	1	Bedroom	28	18	Radiant Panels	Remote Sensor Adj.	Yes	Ceiling Cassette - Chilled Water	Natural & Central Supply Air	4	via ensuite	Balanced	F7	43	41	100	5	300	A	80	Switch / Dimmer	Bed / Trolley 1.45m
G-A2-013	En-suite wheelchair-accessible WC, Shower & wash	1	Bathroom	28	20	Adjacent Space Transfer Air	None	No	None	Central Dirty Extract	0	Minimum 10	Negative	None	n/a	41	200	n/a	None	A	80	Automatic Controls	Floor 0m
G-A2-014	Single Bedroom 21 (RHSC)	1	Bedroom	28	18	Radiant Panels	Remote Sensor Adj.	Yes	Ceiling Cassette - Chilled Water	Natural & Central Supply Air	4	via ensuite	Balanced	F7	43	41	100	5	300	A	80	Switch / Dimmer	Bed / Trolley 1.45m
G-A2-015	En-suite wheelchair-accessible WC, Shower & wash	1	Bathroom	28	20	Radiant Panels	Remote Sensor Adj.	No	None	Central Dirty Extract	0	10 minimum	Negative	None	43	41	200	n/a	None	A	80	Automatic Controls	Floor 0m
G-A2-016	Resuscitation Trolley Bay	1	Resus Trolley bay	28	16	Adjacent Space Transfer	None	No	None	None	0	0	n/a	None	n/a	n/a	200	n/a	None	A	80	Automatic Controls	Floor 0m
G-A2-017	Single Bedroom 18 (RHSC)	1	Bedroom	28	18	Radiant Panels	Remote Sensor Adj.	Yes	Comfort Cooled Fresh Air	Natural & Central Supply Air	4	via ensuite	Balanced	F7	43	41	100	5	300	A	80	Switch / Dimmer	Bed / Trolley 1.45m
G-A2-018	En-suite wheelchair-accessible WC, Shower & wash	1	Bathroom	28	20	Radiant Panels	Remote Sensor Adj.	No	None	Central Dirty Extract	0	Minimum 10	Negative	None	43	41	200	n/a	None	A	80	Automatic Controls	Floor 0m
G-A2-019	Single Bedroom 22 (RHSC)	1	Bedroom	28	18	Radiant Panels	Remote Sensor Adj.	Yes	Comfort Cooled Fresh Air	Natural & Central Supply Air	4	via ensuite	Balanced	F7	43	41	100	5	300	A	80	Switch / Dimmer	Bed / Trolley 1.45m
G-A2-020	En-suite wheelchair-accessible WC, Shower & wash	1	Bathroom	28	20	Adjacent Space Transfer Air	None	No	None	Central Dirty Extract	0	Minimum 10	Negative	None	n/a	41	200	n/a	None	A	80	Automatic Controls	Floor 0m
G-A2-021	Clean Utility	1	Clean Utility	28	18	Radiant Panels	Remote Sensor Adj.	Yes	Comfort Cooled Fresh Air	Central Supply Air	6	0	Positive	F7	43	41	150	n/a	None	A	80	Automatic Controls	General working plane 1m
G-A2-022	Dirty Utility	1	Dirty utility	28	18	Adjacent Space Transfer Air	None	No	None	Central Dirty Extract	0	6	Negative	None	n/a	41	200	n/a	None	A	80	Automatic Controls	Floor 0m
G-A2-023	WC - Staff	1	Toilet	28	18	Adjacent Space Transfer Air	None	No	None	Central Dirty Extract	0	10	Negative	None	n/a	41	200	n/a	None	A	80	Automatic Controls	Floor 0m
G-A2-024	WC - Visitors	1	Toilet	28	18	Adjacent Space Transfer Air	None	No	None	Central Dirty Extract	0	10	Negative	None	n/a	41	200	n/a	None	A	80	Automatic Controls	Floor 0m
G-A2-025	Linen Bay (1 Trolley)	1	Storage Area Equipment	28	16	Adjacent Space Transfer Air	None	No	None	Central General Extract	0	3	Negative	None	n/a	n/a	200	n/a	None	A	80	Automatic Controls	Floor 0m
G-A2-026	Touchdown Base 3	1	staff base	28	18	Radiant Panels	Remote Sensor Adj.	Yes	Ceiling Cassette - Chilled Water	None	0	0	n/a	n/a	43	n/a	200/300	n/a	1000	A	80	Switch / Dimmer	Desk 0.75 to 0.85m

Room No.	Room Name	Qty	Room Function	Temp (max)	Temp (min)	Heating Type	Heating Control	Cooling (present)	Cooling (type)	Ventilation (type)	Supply (ac/hr)	Extract (ac/hr)	Relative pressure	Min filtration	Surface temp	Water temp	Normal lux	Night lux	Local lux	Standby grade	Colour render	Control	Plane
G-A2-027	Hoist Bay	1	Circulation Equipment Storage Bays	28	16	Adjacent Space Transfer	None	No	None	None	0	0	n/a	None	n/a	n/a	200	n/a	None	A	80	Automatic Controls	Floor 0m
G-A2-028	4 Bed Room	1	Multi-bed Wards	28	18	Radiant Panels	Remote Sensor Adj.	Yes	Ceiling Cassette - Chilled Water	Natural and Central Supply Air	4	via ensuite	positive to ensuite	F7	43	41	100	5	300	A	80	switch / dimmer	Bed / Trolley 1.45m
G-A2-029	En-suite wheelchair-accessible WC, Shower & wash	1	Bathroom	28	20	Radiant Panels	Remote Sensor Adj.	No	None	Central Dirty Extract	0	10	Negative	None	43	41	200	n/a	None	A	80	Automatic Controls	Floor 0m
G-A2-030	WC Accessible	1	Toilet	28	18	Adjacent Space Transfer Air	None	No	None	Central Dirty Extract	0	10	Negative	None	n/a	41	200	n/a	None	A	80	Automatic Controls	Floor 0m
G-A2-031	Single Bedroom 14 (RHSC)	1	Bedroom	28	18	Radiant Panels	Remote Sensor Adj.	Yes	Comfort Cooled Fresh Air	Natural & Central Supply Air	4	via ensuite	Balanced	F7	43	41	100	5	300	A	80	Switch / Dimmer	Bed / Trolley 1.45m
G-A2-032	En-suite wheelchair-accessible WC, Shower & wash	1	Bathroom	28	20	Adjacent Space Transfer Air	None	No	None	Central Dirty Extract	0	Minimum 10	Negative	None	n/a	41	200	n/a	None	A	80	Automatic Controls	Floor 0m
G-A2-033	Single Bedroom 13 (RHSC)	1	Bedroom	28	18	Radiant Panels	Remote Sensor Adj.	Yes	Comfort Cooled Fresh Air	Natural & Central Supply Air	4	via ensuite	Balanced	F7	43	41	100	5	300	A	80	Switch / Dimmer	Bed / Trolley 1.45m
G-A2-034	En-suite wheelchair-accessible WC, Shower & wash	1	Bathroom	28	20	Radiant Panels	Remote Sensor Adj.	No	None	Central Dirty Extract	0	Minimum 10	Negative	None	43	41	200	n/a	None	A	80	Automatic Controls	Floor 0m
G-A2-035	Single Bedroom 12 (RHSC)	1	Bedroom	28	18	Radiant Panels	Remote Sensor Adj.	Yes	Comfort Cooled Fresh Air	Natural & Central Supply Air	4	via ensuite	Balanced	F7	43	41	100	5	300	A	80	Switch / Dimmer	Bed / Trolley 1.45m
G-A2-036	En-suite wheelchair-accessible WC, Shower & wash	1	Bathroom	28	20	Adjacent Space Transfer Air	None	No	None	Central Dirty Extract	0	Minimum 10	Negative	None	n/a	41	200	n/a	None	A	80	Automatic Controls	Floor 0m
G-A2-037	Single Bedroom 11 (RHSC)	1	Bedroom	28	18	Radiant Panels	Remote Sensor Adj.	Yes	Comfort Cooled Fresh Air	Natural & Central Supply Air	4	via ensuite	Balanced	F7	43	41	100	5	300	A	80	Switch / Dimmer	Bed / Trolley 1.45m
G-A2-038	En-suite wheelchair-accessible WC, Shower & wash	1	Bathroom	28	20	Radiant Panels	Remote Sensor Adj.	No	None	Central Dirty Extract	0	Minimum 10	Negative	None	43	41	200	n/a	None	A	80	Automatic Controls	Floor 0m
G-A2-039	Treatment Room	1	Treatment Room	25	18	Radiant Panels	Remote Sensor Adj.	Yes	Comfort Cooled Fresh Air	Central Supply Air	10	0	Positive	F7	43	41	500	n/a	1000	A	90	Switch	Bed / Trolley 1.45m
G-A2-040	Dining / Play Room	1	Common room/staff room/lounge	28	18	Radiant Panels	Remote Sensor Adj.	Yes	Comfort Cooled Fresh Air	Central Supply and Extract	7	8	Negative	F7	43	41	300	n/a	None	A	80	Switch	Floor 0m
G-A2-041	Ward Kitchen	1	Ward Kitchen	28	18	Radiant Panels	Remote Sensor Adj.	No	None	Central General Extract	0	6	Negative	None	43	60	500	n/a	None	A	80	Switch	General working plane 1m
G-A2-042	Single Bedroom 10 (RHSC)	1	Bedroom	28	18	Radiant Panels	Remote Sensor Adj.	Yes	Comfort Cooled Fresh Air	Natural & Central Supply Air	4	via ensuite	Balanced	F7	43	41	100	5	300	A	80	Switch / Dimmer	Bed / Trolley 1.45m
G-A2-043	En-suite wheelchair-accessible WC, Shower & wash	1	Bathroom	28	20	Radiant Panels	Remote Sensor Adj.	No	None	Central Dirty Extract	0	Minimum 10	Negative	None	43	41	200	n/a	None	A	80	Automatic Controls	Floor 0m
G-A2-044	Single Bedroom 9 (RHSC)	1	Bedroom	28	18	Radiant Panels	Remote Sensor Adj.	Yes	Comfort Cooled Fresh Air	Central Supply and Extract Air	6	6 via bedroom & ensuite	Balanced	F7	43	41	100	5	300	A	80	Switch / Dimmer	Bed / Trolley 1.45m
G-A2-045	En-suite wheelchair-accessible WC, Shower & wash	1	Bathroom	28	20	Adjacent Space Transfer Air	None	No	None	Central Dirty Extract	0	10	Negative	None	n/a	41	200	n/a	None	A	80	Automatic Controls	Floor 0m
G-A2-046	4 Bed Room	1	Multi-bed Wards	28	18	Radiant Panels	Remote Sensor Adj.	Yes	Ceiling Cassette - Chilled Water	Natural and Central Supply Air	4	via ensuite	positive to ensuite	F7	43	41	100	5	300	A	80	switch / dimmer	Bed / Trolley 1.45m
G-A2-047	WC Accessible	1	Toilet	28	18	Adjacent Space Transfer Air	None	No	None	Central Dirty Extract	0	10	Negative	None	n/a	41	200	n/a	None	A	80	Automatic Controls	Floor 0m
G-A2-048	En-suite wheelchair-accessible WC, Shower & wash	1	Bathroom	28	20	Radiant Panels	Remote Sensor Adj.	No	None	Central Dirty Extract	0	10	Negative	None	43	41	200	n/a	None	A	80	Automatic Controls	Floor 0m
G-A2-049	Touchdown Base 2	1	staff base	28	18	Radiant Panels	Remote Sensor Adj.	No	None	None	0	0	n/a	None	43	n/a	200/300	n/a	1000	A	80	Switch / Dimmer	Desk 0.75 to 0.85m
G-A2-050	Single Bedroom 8 (RHSC)	1	Bedroom	28	18	Radiant Panels	Remote Sensor Adj.	Yes	Ceiling Cassette - Chilled Water	Natural & Central Supply Air	4	via ensuite	Balanced	F7	43	41	100	5	300	A	80	Switch / Dimmer	Bed / Trolley 1.45m
G-A2-051	En-suite wheelchair-accessible WC, Shower & wash	1	Bathroom	28	20	Radiant Panels	Remote Sensor Adj.	No	None	Central Dirty Extract	0	Minimum 10	Negative	None	43	41	200	n/a	None	A	80	Automatic Controls	Floor 0m
G-A2-052	Single Bedroom 7 (RHSC)	1	Bedroom	28	18	Radiant Panels	Remote Sensor Adj.	Yes	Ceiling Cassette - Chilled Water	Natural & Central Supply Air	4	via ensuite	Balanced	F7	43	41	100	5	300	A	80	Switch / Dimmer	Bed / Trolley 1.45m
G-A2-053	En-suite wheelchair-accessible WC, Shower & wash	1	Bathroom	28	20	Adjacent Space Transfer Air	None	No	None	Central Dirty Extract	0	Minimum 10	Negative	None	n/a	41	200	n/a	None	A	80	Automatic Controls	Floor 0m
G-A2-054	4 Bed Room	1	Multi-bed Wards	28	18	Radiant Panels	Remote Sensor Adj.	Yes	Ceiling Cassette - Chilled Water	Natural and Central Supply Air	4	via ensuite	positive to ensuite	F7	43	41	100	5	300	A	80	switch / dimmer	Bed / Trolley 1.45m
G-A2-055	En-suite wheelchair-accessible WC, Shower & wash	1	Bathroom	28	20	Adjacent Space Transfer Air	None	No	None	Central Dirty Extract	0	10	Negative	None	n/a	41	200	n/a	None	A	80	Automatic Controls	Floor 0m
G-A2-056	WC Accessible	1	Toilet	28	18	Radiant Panels	Remote Sensor Adj.	No	None	Central Dirty Extract	0	10	Negative	None	43	41	200	n/a	None	A	80	Automatic Controls	Floor 0m
G-A2-058	Single Bedroom 6 (RHSC)	1	Bedroom	28	18	Radiant Panels	Remote Sensor Adj.	Yes	Comfort Cooled Fresh Air	Natural & Central Supply Air	4	via ensuite	Balanced	F7	43	41	100	5	300	A	80	Switch / Dimmer	Bed / Trolley 1.45m
G-A2-059	En-suite wheelchair-accessible WC, Shower & wash	1	Bathroom	28	20	Radiant Panels	Remote Sensor Adj.	No	None	Central Dirty Extract	0	Minimum 10	Negative	None	43	41	200	n/a	None	A	80	Automatic Controls	Floor 0m
G-A2-060	Single Bedroom 5 (RHSC)	1	Bedroom	28	18	Radiant Panels	Remote Sensor Adj.	Yes	Comfort Cooled Fresh Air	Natural & Central Supply Air	4	via ensuite	Balanced	F7	43	41	100	5	300	A	80	Switch / Dimmer	Bed / Trolley 1.45m
G-A2-061	En-suite wheelchair-accessible WC, Shower & wash	1	Bathroom	28	20	Adjacent Space Transfer Air	None	No	None	Central Dirty Extract	0	Minimum 10	Negative	None	n/a	41	200	n/a	None	A	80	Automatic Controls	Floor 0m
G-A2-062	WC - Staff	1	Toilet	28	18	Adjacent Space Transfer Air	None	No	None	Central Dirty Extract	0	10	Negative	None	n/a	41	200	n/a	None	A	80	Automatic Controls	Floor 0m
G-A2-063	Linen Bay (1 Trolley)	1	Storage Area Equipment	28	16	Adjacent Space Transfer Air	None	No	None	Central General Extract	0	3	Negative	None	n/a	n/a	200	n/a	None	A	80	Automatic Controls	Floor 0m
G-A2-064	Store - Equipment	1	Storage Area Equipment	28	16	Adjacent Space Transfer Air	None	No	None	Central General Extract	0	3	Negative	None	n/a	n/a	200	n/a	None	A	80	Automatic Controls	Floor 0m
G-A2-065	Single Bedroom 4 (RHSC)	1	Bedroom	28	18	Radiant Panels	Remote Sensor Adj.	Yes	Comfort Cooled Fresh Air	Natural & Central Supply Air	4	via ensuite	Balanced	F7	43	41	100	5	300	A	80	Switch / Dimmer	Bed / Trolley 1.45m
G-A2-066	En-suite wheelchair-accessible WC, Shower & wash	1	Bathroom	28	20	Adjacent Space Transfer Air	None	No	None	Central Dirty Extract	0	Minimum 10	Negative	None	n/a	41	200	n/a	None	A	80	Automatic Controls	Floor 0m
G-A2-067	Single Bedroom 3 (RHSC)	1	Bedroom	28	18	Radiant Panels	Remote Sensor Adj.	Yes	Comfort Cooled Fresh Air	Natural & Central Supply Air	4	via ensuite	Balanced	F7	43	41	100	5	300	A	80	Switch / Dimmer	Bed / Trolley 1.45m
G-A2-068	En-suite wheelchair-accessible WC, Shower & wash	1	Bathroom	28	20	Adjacent Space Transfer Air	None	No	None	Central Dirty Extract	0	Minimum 10	Negative	None	n/a	41	200	n/a	None	A	80	Automatic Controls	Floor 0m
G-A2-069	Touchdown Base	1	Staff base	28	18	Radiant Panels	Remote Sensor Adj.	Yes	Comfort Cooled Fresh Air	Central Supply Air	2 people at 10 l/s per person (8ach)	0	Positive	F7	43	n/a	200/300	n/a	1000	A	80	Switch / Dimmer	Desk 0.75 to 0.85m
G-A2-070	Single Bedroom 2 (RHSC)	1	Bedroom	28	18	Radiant Panels	Remote Sensor Adj.	Yes	Comfort Cooled Fresh Air	Natural & Central Supply Air	4	via ensuite	Balanced	F7	43	41	100	5	300	A	80	Switch / Dimmer	Bed / Trolley 1.45m
G-A2-071	En-suite wheelchair-accessible WC, Shower & wash	1	Bathroom	28	20	Radiant Panels	Remote Sensor Adj.	No	None	Central Dirty Extract	0	Minimum 10	Negative	None	43	41	200	n/a	None	A	80	Automatic Controls	Floor 0m
G-A2-072	Single Isolation Bedroom 1 (RHSC)	1	Isolation Bedroom	28	21	Adjacent Space Transfer Air	Local / BMS Adjustable Sensor	Yes	Comfort Cooled Fresh Air	Supply Via Lobby	10	10 via the ensuite	Balanced	H14	n/a	41	100	5	300	A	80	Switch / Dimmer	Bed / Trolley 1.45m
G-A2-073	En-suite wheelchair-accessible WC, Shower & wash	1	Bathroom	28	20	Adjacent Space Transfer Air	None	No	None	Central Dirty Extract	0	43	Negative	None	n/a	41	200	n/a	None	A	80	Automatic Controls	Floor 0m
G-A2-074	Isolation Bedroom Entrance Lobby	1	Isolation Lobby	28	21	Warm Air - Reheat Battery	Local / BMS Adjustable Sensor	Yes	Comfort Cooled Fresh Air	Central Supply	46	0	Positive	H14	n/a	41	200	n/a	None	A	80	Automatic Controls	Floor 0m
G-A2-075 A&B	Store - General	1	Storage Area Equipment	28	16	Adjacent Space Transfer Air	None	No	None	Central General Extract	0	3	Negative	None	n/a	n/a	200	n/a	None	A	80	Automatic Controls	Floor 0m
G-A2-076	Patients' Assisted Bathroom	1	Bathroom	28	20	Radiant Panels	Remote Sensor Adj.	No	None	Central Dirty Extract	0	10	Negative	None	43	41	200	n/a	None	A	80	Switch	Floor 0m
G-A2-077	Multi-Disciplinary Office	1	Multi Disciplinary Work Areas	28	18	Radiant Panels	Remote Sensor Adj.	Yes	Ceiling Cassette - Chilled Water	Central Supply and Extract	6	4	Positive	F7	43	n/a	400	n/a	None	A	80	Automatic Controls	Desk 0.75 to 0.85m

Room No.	Room Name	Qty	Room Function	Temp (max)	Temp (min)	Heating Type	Heating Control	Cooling (present)	Cooling (type)	Ventilation (type)	Supply (ac/hr)	Extract (ac/hr)	Relative pressure	Min filtration	Surface temp	Water temp	Normal lux	Night lux	Local lux	Standby grade	Colour render	Control	Plane
G-A2-078	Ward Management Office	1	Cellular / Ward Offices	28	18	Radiant Panels	Remote Sensor Adj.	Yes	Ceiling Cassette - Chilled Water	Central Supply and Extract	4	3	Positive	F7	43	n/a	400	n/a	None	A	80	Switch	Desk 0.75 to 0.85m
G-A2-079	On-Call Consultant Office (2 Person)	1	Cellular / Ward Offices	28	18	Radiant Panels	Remote Sensor Adj.	Yes	Ceiling Cassette - Chilled Water	Central Supply and Extract	4	3	Positive	F7	43	n/a	400	n/a	None	A	80	Switch	Desk 0.75 to 0.85m
G-A2-080	DSR	1	DSR	28	18	Adjacent Space Transfer Air	None	No	None	Central Dirty Extract	0	6	Negative	None	n/a	60	100	n/a	None	A	80	Automatic Controls	Floor 0m
G-A2-081	Clinical Coordination Office (2 Person)	1	Cellular / Ward Offices	28	18	Radiant Panels	Remote Sensor Adj.	Yes	Ceiling Cassette - Chilled Water	Central Supply and Extract	4	3	Positive	F7	43	n/a	400	n/a	None	A	80	Switch	Desk 0.75 to 0.85m
G-A2-082	Disposal Hold	1	Disposal Hold	28	16	Adjacent Space Transfer Air	None	No	None	Central Dirty Extract	0	6	Negative	None	n/a	n/a	200	n/a	None	A	80	Switch / Dimmer	Floor 0m
G-A2-083	Patient Interview Room	1	Meeting Room	25	18	Radiant Panels	Remote Sensor Adj.	Yes	Ceiling Cassette - Chilled Water	Central Supply and Extract	6 people at 10 l/s per person (9ach)	6 people at 10 l/s per person (9ach)	Balanced	F7	43	n/a	300	n/a	None	A	80	Switch	Desk 0.75 to 0.85m
G-A2-084	Dirty Utility	1	Dirty utility	28	18	Adjacent Space Transfer Air	None	No	None	Central Dirty Extract	0	6	Negative	None	n/a	41	200	n/a	None	A	80	Automatic Controls	Floor 0m
G-A2-001	Corridor	1	Corridor	28	18	Radiant Panels	Remote Sensor Adj.	No	None	None	0	0	n/a	None	43	n/a	200	n/a	None	A	80	Automatic Controls	Floor 0m
G-A2-057	Corridor	1	Corridor	28	18	Radiant Panels	Remote Sensor Adj.	No	None	None	0	0	n/a	None	43	n/a	200	n/a	None	A	80	Automatic Controls	Floor 0m
G-A2-085	Corridor	1	Corridor	28	18	Adjacent Space Transfer	None	No	None	None	0	0	n/a	None	n/a	n/a	200	n/a	None	A	80	Automatic Controls	Floor 0m
G-A2-086	Switch Cupboard	1	Switch Cupboard	Not Controlled	Not Controlled	None	None	No	None	None	0	0	n/a	None	n/a	n/a	100	n/a	None	A	80	Automatic Controls	Floor 0m
G-A2-088	Switch Cupboard	1	Switch Cupboard	Not Controlled	Not Controlled	None	None	No	None	None	0	0	n/a	None	n/a	n/a	100	n/a	None	A	80	Automatic Controls	Floor 0m
G-A2-089	Switch Cupboard	1	Switch Cupboard	Not Controlled	Not Controlled	None	None	No	None	None	0	0	n/a	None	n/a	n/a	100	n/a	None	A	80	Automatic Controls	Floor 0m
G-A3-001	Staff Room	1	Common room/staff room/lounge	28	18	Radiant Panels	Remote Sensor Adj.	Yes	Comfort Cooled Fresh Air	Central Supply and Extract	6	8	Negative	F7	43	41	300	n/a	None	A	80	Switch	Floor 0m
G-A3-002	Seminar & Training Room	1	Meeting Room	25	18	Radiant Panels	Remote Sensor Adj.	Yes	Ceiling Cassette - Chilled Water	Central Supply and Extract	22 people at 10 l/s per person (9ach)	22 people at 10 l/s per person (9ach)	Balanced	F7	43	n/a	300	n/a	None	A	80	Switch	Desk 0.75 to 0.85m
G-A3-003	Meeting / Case Conference Room	1	Meeting Room	25	18	Radiant Panels	Remote Sensor Adj.	Yes	Ceiling Cassette - Chilled Water	Central Supply and Extract	25 people at 10 l/s per person (11ach)	25 people at 10 l/s per person (11ach)	Balanced	F7	43	n/a	300	n/a	None	A	80	Switch	Desk 0.75 to 0.85m
G-A3-004	Lobby	1	Lobby	Not Controlled	Not Controlled	None	None	No	None	None	0	0	n/a	None	n/a	n/a	200	n/a	None	A	80	Automatic Controls	Floor 0m
G-A3-005	Switch Cupboard	1	Switch Cupboard	Not Controlled	Not Controlled	None	None	No	None	None	0	0	n/a	None	n/a	n/a	100	n/a	None	A	80	Automatic Controls	Floor 0m
1-B1-002	Retrieval Equipment Store	1	Storage Area Equipment	28	16	Adjacent Space Transfer Air	None	No	None	Central General Extract	0	3	Negative	None	n/a	n/a	200	n/a	None	A	80	Automatic Controls	Floor 0m
1-B1-003	Staff Room	1	Common room/staff room/lounge	28	18	Radiant Panels	Remote Sensor Adj.	Yes	Comfort Cooled Fresh Air	Central Supply and Extract	6	8	Negative	F7	43	41	300	n/a	None	A	80	Switch	Floor 0m
1-B1-004	Senior Nursing Office	1	Cellular / Ward Offices	28	18	Radiant Panels	Remote Sensor Adj.	Yes	Ceiling Cassette - Chilled Water	Central Supply and Extract	4	3	Positive	F7	43	n/a	400	n/a	None	A	80	Switch	Desk 0.75 to 0.85m
1-B1-005	WC - Staff	1	Toilet	28	18	Adjacent Space Transfer Air	None	No	None	Central Dirty Extract	0	10	Negative	None	n/a	41	200	n/a	None	A	80	Automatic Controls	Floor 0m
1-B1-006	WC - Staff	1	Toilet	28	18	Adjacent Space Transfer Air	None	No	None	Central Dirty Extract	0	10	Negative	None	n/a	41	200	n/a	None	A	80	Automatic Controls	Floor 0m
1-B1-007	Equipment Service Room	1	Small Workshop	28	18	Radiant Panels	Remote Sensor Adj.	Yes	Comfort Cooled Fresh Air	Central Supply and Extract	4	6	Negative	F7	43	41	300	n/a	None	A	80	Switch	Desk 0.75 to 0.85m
1-B1-008	IPS Room	1	IPS Room	30	18	Adjacent Space Transfer Air	None	No	None	Central General Extract	0	3	Negative	None	n/a	n/a	200	n/a	None	A	80	Automatic Controls	Floor 0m
1-B1-009	Open Plan Bay (4 beds)	1	Multi-bed Wards	28	18	Radiant Panels	Remote Sensor Adj.	Yes	Comfort Cooled Fresh Air	Natural and Central Supply Air	4	1.7	positive	F7	43	41	100	5	300	A	80	switch / dimmer	Bed / Trolley 1.45m
1-B1-010	Gas Cylinder Store	1	Storage Area Med Gas	28	16	Adjacent Space Transfer Air	None	No	None	Central General Extract	0	7	Negative	None	n/a	n/a	200	n/a	None	A	80	Automatic Controls	Floor 0m
1-B1-011	Multidisciplinary Work Area PICU	1	Multi Disciplinary Work Areas	28	18	Radiant Panels	Remote Sensor Adj.	Yes	Ceiling Cassette - Chilled Water	Central Supply and Extract	6	4	Positive	F7	43	n/a	400	n/a	None	A	80	Switch	Desk 0.75 to 0.85m
1-B1-012	Staff Base	1	Cellular / Ward Offices	28	18	Radiant Panels	Remote Sensor Adj.	Yes	Comfort Cooled Fresh Air	Central Supply and Extract	4	3	Positive	F7	43	n/a	400	n/a	None	A	80	Switch	Desk 0.75 to 0.85m
1-B1-014	Resuscitation Trolley Bay	1	Circulation Equipment Storage Bays	28	16	Adjacent Space Transfer Air	None	No	None	Central General Extract	0	3	Negative	None	n/a	n/a	200	n/a	None	A	80	Automatic Controls	Floor 0m
1-B1-015	Gowning Lobby	1	Isolation Lobby	28	21	Warm Air - Reheat Battery	Local / BMS Adjustable Sensor	Yes	Comfort Cooled Fresh Air	Central Supply	55	0	Positive	H14	n/a	41	200	n/a	None	A	80	Automatic Controls	Floor 0m
1-B1-016	Single Bed Isolation Cubicle	1	Isolation Bedroom	28	21	Adjacent Space Transfer Air	BMS Adjustable Sensor	Yes	Comfort Cooled Fresh Air	Supply via lobby	10	10	Balanced	H14	n/a	41	100	5	300	A	80	Switch / Dimmer	Bed / Trolley 1.45m
1-B1-017	Single Bed Isolation Cubicle	1	Isolation Bedroom	28	21	Adjacent Space Transfer Air	BMS Adjustable Sensor	Yes	Comfort Cooled Fresh Air	Supply via lobby	10	10	Balanced	H14	n/a	41	100	5	300	A	80	Switch / Dimmer	Bed / Trolley 1.45m
1-B1-018	Gowning Lobby	1	Isolation Lobby	28	21	Warm Air - Reheat Battery	Local / BMS Adjustable Sensor	Yes	Comfort Cooled Fresh Air	Central Supply	55	0	Positive	H14	n/a	41	200	n/a	None	A	80	Automatic Controls	Floor 0m
1-B1-019	Single Bed Cubicle	1	Bedroom	28	18	Radiant Panels	Remote Sensor Adj.	Yes	Ceiling Cassette - Chilled Water	Central Supply & Extract	4	4	Balanced	F7	43	41	100	5	300	A	80	Switch / Dimmer	Bed / Trolley 1.45m
1-B1-020	Single Bed Cubicle	1	Bedroom	28	18	Radiant Panels	Remote Sensor Adj.	Yes	Comfort Cooled Fresh Air	Central Supply & Extract	4	4	Balanced	F7	43	41	100	5	300	A	80	Switch / Dimmer	Bed / Trolley 1.45m
1-B1-021	Single Bed Cubicle	1	Bedroom	28	18	Radiant Panels	Remote Sensor Adj.	Yes	Comfort Cooled Fresh Air	Central Supply & Extract	4	4	Balanced	F7	43	41	100	5	300	A	80	Switch / Dimmer	Bed / Trolley 1.45m
1-B1-023	Staff Base	1	Cellular / Ward Offices	28	18	Radiant Panels	Remote Sensor Adj.	Yes	Comfort Cooled Fresh Air	Central Supply and Extract	4	3	Positive	F7	43	n/a	400	n/a	None	A	80	Switch	Desk 0.75 to 0.85m
1-B1-024	Resuscitation Trolley Bay	1	Circulation Equipment Storage Bays	28	16	Adjacent Space Transfer	None	No	None	None	0	0	n/a	None	n/a	n/a	200	n/a	None	A	80	Automatic Controls	Floor 0m
1-B1-025	Gowning Lobby	1	Isolation Lobby	28	21	Warm Air - Reheat Battery	Local / BMS Adjustable Sensor	Yes	Comfort Cooled Fresh Air	Central Supply	62	0	Positive	H14	n/a	41	200	n/a	None	A	80	Automatic Controls	Floor 0m
1-B1-026	Single Bed Isolation Cubicle	1	Isolation Bedroom	28	21	Adjacent Space Transfer Air	BMS Adjustable Sensor	Yes	Comfort Cooled Fresh Air	Supply via lobby	10	10	Balanced	H14	n/a	41	100	5	300	A	80	Switch / Dimmer	Bed / Trolley 1.45m
1-B1-027	Clean Utility	1	Clean Utility	28	18	Radiant Panels	Remote Sensor Adj.	Yes	Comfort Cooled Fresh Air	Central Supply Air	6	0	Positive	F7	43	41	150	n/a	None	A	80	Automatic Controls	General working plane 1m
1-B1-028	Bed/Patient Chair / Buggy Storage	1	Storage Area Equipment	28	16	Adjacent Space Transfer Air	None	No	None	Central General Extract	0	3	Negative	None	n/a	n/a	200	n/a	None	A	80	Automatic Controls	Floor 0m
1-B1-029	Dirty Utility	1	Dirty utility	28	18	Adjacent Space Transfer Air	None	No	None	Central Dirty Extract	0	6	Negative	None	n/a	41	200	n/a	None	A	80	Automatic Controls	Floor 0m
1-B1-030	Linen Bay (1 Trolley)	1	Linen Bay	28	16	Adjacent Space Transfer	None	No	None	None	0	0	n/a	None	n/a	n/a	100 (KNX)	n/a	None	A	80	Automatic Controls	Floor 0m
1-B1-031	Open Plan Bay (4 beds)	1	Multi-bed Wards	28	18	Radiant Panels	Remote Sensor Adj.	Yes	Comfort Cooled Fresh Air	Central Supply & Extract	4	1.8	positive	F7	43	41	100	5	300	A	80	switch / dimmer	Bed / Trolley 1.45m
1-B1-032	Patients' Assisted Bathroom	1	Bathroom	28	20	Radiant Panels	Remote Sensor Adj.	No	None	Central Dirty Extract	0	10	Negative	None	43	41	200	n/a	None	A	80	Switch	Floor 0m
1-B1-033	Gowning Lobby	1	Isolation Lobby	28	21	Warm Air - Reheat Battery	Local / BMS Adjustable Sensor	Yes	Comfort Cooled Fresh Air	Central Supply	45	0	Positive	H14	na	41	200	n/a	None	A	80	Automatic Controls	Floor 0m
1-B1-034	Linen Bay (1 Trolley)	1	Linen Bay	28	16	Adjacent Space Transfer	None	No	None	None	0	0	n/a	None	n/a	n/a	100 (KNX)	n/a	None	A	80	Automatic Controls	Floor 0m
1-B1-035	Hoist Bay	1	Circulation Equipment Storage Bays	28	16	Adjacent Space Transfer Air	None	No	None	Central General Extract	0	3	Negative	None	n/a	n/a	200	n/a	None	A	80	Automatic Controls	Floor 0m

Room No.	Room Name	Qty	Room Function	Temp (max)	Temp (min)	Heating Type	Heating Control	Cooling (present)	Cooling (type)	Ventilation (type)	Supply (ac/hr)	Extract (ac/hr)	Relative pressure	Min filtration	Surface temp	Water temp	Normal lux	Night lux	Local lux	Standby grade	Colour render	Control	Plane
1-B1-036	Single Bed Isolation Cubicle	1	Isolation Bedroom	28	21	Adjacent Space Transfer Air	BMS Adjustable Sensor	Yes	Comfort Cooled Fresh Air	Supply via lobby	10	10	Balanced	H14	n/a	41	100	5	300	A	80	Switch / Dimmer	Bed / Trolley 1.45m
1-B1-037	Single Bed Cubicle	1	Bedroom	28	18	Radiant Panels	Remote Sensor Adj.	Yes	Comfort Cooled Fresh Air	Central Supply & Extract	4	4	Balanced	F7	43	41	100	5	300	A	80	Switch / Dimmer	Bed / Trolley 1.45m
1-B1-038	Staff Base	1	Staff Base	28	18	Radiant Panels	Remote Sensor Adj.	Yes	Comfort Cooled Fresh Air	Central Supply and Extract	4	3	Positive	F7	43	n/a	200/300	n/a	None	A	80	Switch / Dimmer	General working plane 1m
1-B1-039	Resuscitation Trolley Bay	1	Circulation Equipment Storage Bays	28	16	Adjacent Space Transfer Air	None	No	None	Central General Extract	0	3	Negative	None	n/a	n/a	200	n/a	None	A	80	Automatic Controls	Floor 0m
1-B1-041	Clean Utility	1	Clean Utility	28	18	Radiant Panels	Remote Sensor Adj.	Yes	Comfort Cooled Fresh Air	Central Supply Air	6	0	Positive	F7	43	41	150	n/a	None	A	80	Automatic Controls	General working plane 1m
1-B1-042	Multidisciplinary Work Area HDU	1	Multi Disciplinary Work Areas	28	18	Radiant Panels	Remote Sensor Adj.	Yes	Comfort Cooled Fresh Air	Central Supply and Extract	6	4	Positive	F7	43	n/a	400	n/a	None	A	80	Switch	Desk 0.75 to 0.85m
1-B1-043	Laboratory	1	Laboratory	25	18	Radiant Panels	Remote Sensor Adj.	Yes	Ceiling Cassette - Chilled Water	Central Supply and Extract	6	6	Balanced	F7	43	60	500	n/a	None	A	80	Switch	General working plane 1m
1-B1-044	IPS Room	1	IPS Room	30	18	Adjacent Space Transfer Air	None	No	None	Central General Extract	0	3	Negative	None	n/a	n/a	200	n/a	None	A	80	Automatic Controls	Floor 0m
1-B1-045	Quiet / Interview Room	1	Meeting Room	25	18	Radiant Panels	Remote Sensor Adj.	Yes	Wall Mounted Unit	Central Supply and Extract	4 people at 10 l/s per person (7ach)	4 people at 10 l/s per person (7ach)	Balanced	F7	43	n/a	300	n/a	None	A	80	Switch	Desk 0.75 to 0.85m
1-B1-046	Store - Equipment	1	Storage Area Equipment	28	16	Radiant Panels	Remote Sensor Adj.	No	None	Central General Extract	0	3	Negative	None	43	n/a	200	n/a	None	A	80	Automatic Controls	Floor 0m
1-B1-047	Family Interview Room	1	Meeting Room	25	18	Radiant Panels	Remote Sensor Adj.	Yes	Ceiling Cassette - Chilled Water	Central Supply and Extract	5 people at 10 l/s per person (5ach)	5 people at 10 l/s per person (5ach)	Balanced	F7	43	n/a	300	n/a	None	A	80	Switch	Desk 0.75 to 0.85m
1-B1-048	On call consultant	1	Cellular / Ward Offices	28	18	Radiant Panels	Remote Sensor Adj.	Yes	Comfort Cooled Fresh Air	Central Supply and Extract	6	4	Positive	F7	43	n/a	400	n/a	None	A	80	Switch	Desk 0.75 to 0.85m
1-B1-049	Retrieval Team	1	Cellular / Ward Offices	28	18	Radiant Panels	Remote Sensor Adj.	Yes	Wall Mounted Unit	Central Supply and Extract	6	4	Positive	F7	43	n/a	400	n/a	None	A	80	Switch	Desk 0.75 to 0.85m
1-B1-050	Bulk Supplies Store	1	Storage Area Equipment	28	16	Radiant Panels	Remote Sensor Adj.	No	None	Central General Extract	0	3	Negative	None	43	n/a	200	n/a	None	A	80	Automatic Controls	Floor 0m
1-B1-051	Data Manager & Secretarial Office (3 person)	1	Cellular / Ward Offices	28	18	Radiant Panels	Remote Sensor Adj.	Yes	Comfort Cooled Fresh Air	Central Supply and Extract	6	4	Positive	F7	43	n/a	400	n/a	None	A	80	Switch	Desk 0.75 to 0.85m
1-B1-055	Waiting Area (Visitors)	1	Waiting Room	28	18	Radiant Panels	Remote Sensor Adj.	Yes	Comfort Cooled Fresh Air	Central Supply and Extract	5	5	Balanced	F7	43	n/a	300	n/a	None	A	80	Switch	Floor 0m
1-B1-056	WC - Wheelchair accessible	1	Toilet	28	18	Adjacent Space Transfer Air	None	No	None	Central Dirty Extract	0	10	Negative	None	n/a	41	200	n/a	None	A	80	Automatic Controls	Floor 0m
1-B1-057	X-Ray Processing	1	Diagnostic room	25	18	Radiant Panels	Remote Sensor Adj.	Yes	Comfort Cooled Fresh Air	Central Supply and Extract	8	8	Balanced	F7	43	41	300	n/a	1000	A	80	Switch / Dimmer	General working plane 1m
1-B1-058	Mobile X-Ray / Ultrasound Bay	1	Circulation Equipment Storage Bays	28	16	Adjacent Space Transfer Air	None	Yes	Comfort Cooled Fresh Air	Central Supply & Extract	8	8	Balanced	F7	n/a	n/a	200	n/a	None	A	80	Automatic Controls	Floor 0m
1-B1-059	Cardiac Echo/ECG Bay	1	Circulation Equipment Storage Bays	28	16	Adjacent Space Transfer Air	None	No	None	Central General Extract	0	8	Negative	None	n/a	n/a	200	n/a	None	A	80	Automatic Controls	Floor 0m
1-B1-060	Seminar Room	1	Meeting Room	25	18	Radiant Panels	Remote Sensor Adj.	Yes	Ceiling Cassette - Chilled Water	Central Supply and Extract	19 people at 10 l/s per person (7ach)	19 people at 10 l/s per person (7ach)	Balanced	F7	43	n/a	300	n/a	None	A	80	Switch	Desk 0.75 to 0.85m
1-B1-061	Disposal Hold	1	Disposal Hold	28	16	Adjacent Space Transfer Air	None	No	None	Central Dirty Extract	0	6	Negative	None	n/a	n/a	200	n/a	None	A	80	Automatic Controls	Floor 0m
1-B1-062	WC - Staff	1	Toilet	28	18	Adjacent Space Transfer Air	None	No	None	Central Dirty Extract	0	10	Negative	None	n/a	41	200	n/a	None	A	80	Automatic Controls	Floor 0m
1-B1-063	Open Plan Bay (4 beds)	1	Multi-bed Wards	28	18	Radiant Panels	Remote Sensor Adj.	Yes	Comfort Cooled Fresh Air	Central Supply & Extract	4	3	positive	F7	43	41	100	5	300	A	80	switch / dimmer	Bed / Trolley 1.45m
1-B1-064	Dirty Utility	1	Dirty utility	28	18	Adjacent Space Transfer Air	None	No	None	Central Dirty Extract	0	6	Negative	None	n/a	41	200	n/a	None	A	80	Automatic Controls	Floor 0m
1-B1-065	Open Plan Bay (3 cots)	1	Multi-bed Wards	28	18	Radiant Panels	Remote Sensor Adj.	Yes	Comfort Cooled Fresh Air	Central Supply and Extract	4	4	Balanced	F7	43	41	100	5	300	A	80	switch / dimmer	Bed / Trolley 1.45m
1-B1-066	Clean Utility (Neo-Natal)	1	Clean Utility	28	18	Radiant Panels	Remote Sensor Adj.	Yes	Comfort Cooled Fresh Air	Central Supply Air	6	0	Positive	F7	43	41	150	n/a	None	A	80	Automatic Controls	General working plane 1m
1-B1-067	Gas Cylinder Store	1	Storage Area Med Gas	28	16	Adjacent Space Transfer Air	None	No	None	General Central Extract	0	6	Negative	None	n/a	n/a	200	n/a	None	A	80	Automatic Controls	Floor 0m
1-B1-068	Baby Infant / Feeding Room	1	Baby Feeding	28	18	Radiant Panels	Remote Sensor Adj.	Yes	Wall Mounted Unit	Central Dirty Extract	0	10	Negative	None	43	41	100	n/a	None	A	80	Switch	Floor 0m
1-B1-069	Staff Base	1	Cellular / Ward Offices	28	18	Radiant Panels	Remote Sensor Adj.	Yes	Comfort Cooled Fresh Air	Central Supply and Extract	6	4	Positive	F7	43	n/a	400	n/a	None	A	80	Switch	Desk 0.75 to 0.85m
1-B1-071	Resuscitation Trolley Bay	1	Circulation Equipment Storage Bays	28	16	Adjacent Space Transfer Air	None	No	None	None	0	0	n/a	None	n/a	n/a	200	n/a	None	A	80	Automatic Controls	Floor 0m
1-B1-072	Play Specialist Base & Store	1	Storage Area Equipment	28	16	Adjacent Space Transfer Air	None	Yes	Comfort Cooled Fresh Air	Central Supply and Extract	6	4	Positive	F7	n/a	41	200	n/a	None	A	80	Automatic Controls	Floor 0m
1-B1-073	Pantry / Milk Store	1	Pantry	28	18	Adajcent Space Transfer Air	None	Yes	Comfort Cooled Fresh Air	Central Supply and Extract	6	8	Negative	F7	n/a	41	300	n/a	None	A	80	Switch	Floor 0m
1-B1-074	En-suite wheelchair-accessible WC, Shower & wash	1	Bathroom	28	20	Adjacent Space Transfer Air	None	No	None	Central Dirty Extract	0	minimum 10	Negative	None	n/a	41	200	n/a	None	A	80	Automatic Controls	Floor 0m
1-B1-075	Single Cot Cubicle	1	Bedroom	28	18	Radiant Panels	Remote Sensor Adj.	Yes	Comfort Cooled Fresh Air	Natural & Central Supply Air	4	via ensuite	Balanced	F7	43	41	100	5	300	A	80	Switch / Dimmer	Bed / Trolley 1.45m
1-B1-077	DSR	1	DSR	28	18	Adjacent Space Transfer Air	None	No	None	Central Dirty Extract	0	6	Negative	None	n/a	60	100	n/a	None	A	80	Automatic Controls	Floor 0m
1-B1-078	Relative Overnight Stay Room	1	Relatives Overnight Stay	28	20	Radiant Panels	Remote Sensor Adj.	Yes	Comfort Cooled Fresh Air	Central Supply Air	4	0	Positive	F7	43	41	100	n/a	None	A	80	Switch	Bed / Trolley 1.45m
1-B1-079	En-suite wheelchair-accessible WC, Shower & wash	1	Bathroom	28	20	Adjacent Space Transfer Air	None	No	None	Central Dirty Extract	0	10	Negative	None	n/a	41	200	n/a	None	A	80	Automatic Controls	Floor 0m
1-B1-080	WC - Relatives	1	Toilet	28	18	Adjacent Space Transfer Air	None	No	None	Central Dirty Extract	0	10	Negative	None	n/a	41	200	n/a	None	A	80	Automatic Controls	Floor 0m
1-B1-082	Relative Overnight Stay Room	1	Relatives Overnight Stay	28	20	Radiant Panels	Remote Sensor Adj.	Yes	Comfort Cooled Fresh Air	Central Supply Air	4	0	Positive	F7	43	41	100	n/a	None	A	80	Switch	Bed / Trolley 1.45m
1-B1-083	En-suite wheelchair-accessible WC, Shower & wash	1	Bathroom	28	20	Adjacent Space Transfer Air	None	No	None	Central Dirty Extract	0	10	Negative	None	n/a	41	200	n/a	None	A	80	Automatic Controls	Floor 0m
1-B1-084	Relatives' Sitting Room	1	Common room/staff room/lounge	28	18	Radiant Panels	Remote Sensor Adj.	Yes	Ceiling Cassette - Chilled Water	Central Supply and Extract	6	8	Negative	F7	43	41	300	n/a	None	A	80	Switch	Floor 0m
1-B1-090	Equipment Cleaning	1	DSR	28	18	Adjacent Space Transfer Air	None	No	None	Central Dirty Extract	0	6	Negative	None	n/a	60	100	n/a	None	A	80	Automatic Controls	Floor 0m
1-B1-001	Corridor	1	Corridor	28	18	None	None	No	None	None	0	0	n/a	None	n/a	n/a	200	n/a	None	A	80	Automatic Controls	Floor 0m
1-B1-013	Corridor	1	Corridor	28	18	Radiant Panels	Remote Sensor Adj.	No	None	None	0	0	n/a	None	43	n/a	200	n/a	None	A	80	Automatic Controls	Floor 0m
1-B1-013A	Corridor	1	Corridor	28	18	None	None	No	None	None	0	0	n/a	None	n/a	n/a	200	n/a	None	A	80	Automatic Controls	Floor 0m
1-B1-013B	Corridor	1	Corridor	28	18	None	None	No	None	None	0	0	n/a	None	n/a	n/a	200	n/a	None	A	80	Automatic Controls	Floor 0m
1-B1-013C	Corridor	1	Corridor	28	18	None	None	No	None	None	0	0	n/a	None	n/a	n/a	200	n/a	None	A	80	Automatic Controls	Floor 0m
1-B1-022	Corridor	1	Corridor	28	18	None	None	No	None	None	0	0	n/a	None	n/a	n/a	200	n/a	None	A	80	Automatic Controls	Floor 0m
1-B1-040	Corridor	1	Corridor	28	18	Radiant Panels	Remote Sensor Adj.	No	None	None	0	0	n/a	None	43	n/a	200	n/a	None	A	80	Automatic Controls	Floor 0m
1-B1-052	Corridor	1	Corridor	28	18	Radiant Panels	Remote Sensor Adj.	No	None	None	0	0	n/a	None	43	n/a	200	n/a	None	A	80	Automatic Controls	Floor 0m

Room No.	Room Name	Qty	Room Function	Temp (max)	Temp (min)	Heating Type	Heating Control	Cooling (present)	Cooling (type)	Ventilation (type)	Supply (ac/hr)	Extract (ac/hr)	Relative pressure	Min filtration	Surface temp	Water temp	Normal lux	Night lux	Local lux	Standby grade	Colour render	Control	Plane
1-B1-070	Corridor	1	Corridor	28	18	Radiant Panels	Remote Sensor Adj.	No	None	None	0	0	n/a	None	43	n/a	200	n/a	None	A	80	Automatic Controls	Floor 0m
1-B1-076	Corridor	1	Corridor	28	18	None	None	No	None	None	0	0	n/a	None	n/a	n/a	200	n/a	None	A	80	Automatic Controls	Floor 0m
1-B1-086	Corridor	1	Corridor	28	18	None	None	No	None	None	0	0	n/a	None	n/a	n/a	200	n/a	None	A	80	Automatic Controls	Floor 0m
1-B1-087	Corridor	1	Corridor	28	18	Radiant Panels	Remote Sensor Adj.	No	None	None	0	0	n/a	None	43	n/a	200	n/a	None	A	80	Automatic Controls	Floor 0m
1-B1-088	Corridor	1	Corridor	28	18	Radiant Panels	Remote Sensor Adj.	No	None	None	0	0	n/a	None	43	n/a	200	n/a	None	A	80	Automatic Controls	Floor 0m
1-B1-089	Switch Cupboard	1	Switch Cupboard	Not Controlled	Not Controlled	None	None	No	None	None	0	0	n/a	None	n/a	n/a	100	n/a	None	A	80	Automatic Controls	Floor 0m
3-C1.1-002	IPS Room	1	IPS Room	30	18	Adjacent Space Transfer Air	None	No	None	Central General Extract	0	3	Negative	None	n/a	n/a	200	n/a	None	A	80	Automatic Controls	Floor 0m
3-C1.1-003	Ward Management Office	1	Cellular / Ward Offices	28	18	Radiant Panels	Remote Sensor Adj.	Yes	Comfort Cooled Fresh Air	Central Supply and Extract	4	3	Positive	F7	43	n/a	400	n/a	None	A	80	Switch	Desk 0.75 to 0.85m
3-C1.1-004	Single Isolation Bedroom (RHSC)	1	Isolation Bedroom	28	21	Adjacent Space Transfer Air	BMS Adjustable Sensor	Yes	Comfort Cooled Fresh Air	Supply via lobby	10	10 via the ensuite	Balanced	H14	n/a	41	100	5	300	A	80	Switch / Dimmer	Bed / Trolley 1.45m
3-C1.1-005	En-suite trolley shower	1	Bathroom	28	20	Adjacent Space Transfer Air	None	No	None	Central Dirty Extract	0	25	Negative	None	n/a	41	200	n/a	None	A	80	Automatic Controls	Floor 0m
3-C1.1-006	Isolation Bedroom Entrance Lobby	1	Isolation Lobby	28	21	Warm Air - Reheat Battery	Local / BMS Adjustable Sensor	Yes	Comfort Cooled Fresh Air	Central Supply	48	0	Positive	H14	n/a	41	200	n/a	None	A	80	Automatic Controls	Floor 0m
3-C1.1-007	Hoist Bay	1	Circulation Equipment Storage Bays	28	16	Adjacent Space Transfer Air	None	No	None	None	0	0	n/a	None	n/a	n/a	200	n/a	None	A	80	Automatic Controls	Floor 0m
3-C1.1-008	Sitting Room / Lounge	1	Common room/staff room/lounge	28	18	Radiant Panels	Remote Sensor Adj.	Yes	Comfort Cooled Fresh Air	Central Supply and Extract	6	8	Negative	F7	43	n/a	300	n/a	None	A	80	Switch	Floor 0m
3-C1.1-009	Single Bedroom (RHSC)	1	Bedroom	28	18	Radiant Panels	Remote Sensor Adj.	Yes	Comfort Cooled Fresh Air	Natural & Central Supply Air	4	via ensuite	Balanced	F7	43	41	100	5	300	A	80	Switch / Dimmer	Bed / Trolley 1.45m
3-C1.1-010	En-suite trolley shower	1	Bathroom	28	20	Adjacent Space Transfer Air	None	No	None	Central Dirty Extract	0	minimum 10	Negative	None	n/a	41	200	n/a	None	A	80	Automatic Controls	Floor 0m
3-C1.1-011	Touchdown Base	1	Staff Base	28	18	Radiant Panels	Remote Sensor Adj.	Yes	Comfort Cooled Fresh Air	Central Supply and Extract	1 person at 10l/s/per person (8ach)	0	Positive	F7	43	n/a	200/300	n/a	1000	A	80	Switch / Dimmer	General working plane 1m
3-C1.1-012	Resuscitation Trolley Bay	1	Resus Trolley bay	28	16	Adjacent Space Transfer	None	No	None	None	0	0	n/a	None	n/a	n/a	200	n/a	None	A	80	Automatic Controls	Floor 0m
3-C1.1-013	Single Bedroom (RHSC)	1	Bedroom	28	18	Radiant Panels	Remote Sensor Adj.	Yes	Comfort Cooled Fresh Air	Natural & Central Supply Air	4	via ensuite	Balanced	F7	43	41	100	5	300	A	80	Switch / Dimmer	Bed / Trolley 1.45m
3-C1.1-014	En-suite trolley shower	1	Bathroom	28	20	Radiant Panels	Remote Sensor Adj.	No	None	Central Dirty Extract	0	minimum 10	Negative	None	43	41	200	n/a	None	A	80	Automatic Controls	Floor 0m
3-C1.1-015	Single Bedroom (RHSC)	1	Bedroom	28	18	Radiant Panels	Remote Sensor Adj.	Yes	Comfort Cooled Fresh Air	Natural & Central Supply Air	4	via ensuite	Balanced	F7	43	41	100	5	300	A	80	Switch / Dimmer	Bed / Trolley 1.45m
3-C1.1-016	En-suite trolley shower	1	Bathroom	28	20	Radiant Panels	Remote Sensor Adj.	No	None	Central Dirty Extract	0	minimum 10	Negative	None	43	41	200	n/a	None	A	80	Automatic Controls	Floor 0m
3-C1.1-017	DSR	1	DSR	28	18	Adjacent Space Transfer Air	None	No	None	Central Dirty Extract	0	6	Negative	None	n/a	60	100	n/a	None	A	80	Automatic Controls	Floor 0m
3-C1.1-018	4 Bed Room	1	Multi-bed Wards	28	18	Radiant Panels	Remote Sensor Adj.	Yes	Comfort Cooled Fresh Air	Natural and Central Supply Air	4	via ensuite	positive to ensuite	F7	43	41	100	5	300	A	80	switch / dimmer	Bed / Trolley 1.45m
3-C1.1-019	En-suite wheelchair-accessible WC, Shower & wash	1	Bathroom	28	20	Radiant Panels	Remote Sensor Adj.	No	None	Central Dirty Extract	0	10	Negative	None	43	41	200	n/a	None	A	80	Automatic Controls	Floor 0m
3-C1.1-020	WC Accessible	1	Toilet	28	18	Adjacent Space Transfer Air	None	No	None	Central Dirty Extract	0	10	Negative	None	n/a	41	200	n/a	None	A	80	Automatic Controls	Floor 0m
3-C1.1-021	Dining / Play Room	1	Eating/Drinking	28	18	Radiant Panels	Remote Sensor Adj.	Yes	Comfort Cooled Fresh Air	Central Supply and Extract	8 people at 10 l/s per person (4ach)	8 people at 10 l/s per person (4ach)	Balanced	F7	43	41	300	n/a	None	A	80	Switch	Floor 0m
3-C1.1-022	Store - Equipment	1	Storage Area Equipment	28	16	Radiant Panels	Remote Sensor Adj.	No	None	Central General Extract	0	3	Negative	None	43	n/a	200	n/a	None	A	80	Automatic Controls	Floor 0m
3-C1.1-023	Ward kitchen	1	Ward Kitchen	28	18	Radiant Panels	Remote Sensor Adj.	Yes	Ceiling Cassette - Chilled Water	Central General Extract	0	6	Negative	None	43	60	500	n/a	None	A	80	Switch	General working plane 1m
3-C1.1-024	Linen Bay (1 Trolley)	1	Linen Bay	28	16	Adjacent Space Transfer	None	No	None	None	0	0	n/a	None	n/a	n/a	100	n/a	None	A	80	Automatic Controls	Floor 0m
3-C1.1-025	Store - General	1	Storage Area Equipment	28	16	Adjacent Space Transfer Air	None	No	None	Central General Extract	0	3	Negative	None	n/a	n/a	200	n/a	None	A	80	Automatic Controls	Floor 0m
3-C1.1-026	WC - Staff	1	Toilet	28	18	Adjacent Space Transfer Air	None	No	None	Central Dirty Extract	0	10	Negative	None	n/a	41	200	n/a	None	A	80	Automatic Controls	Floor 0m
3-C1.1-027	WC - Staff	1	Toilet	28	18	Adjacent Space Transfer Air	None	No	None	Central Dirty Extract	0	10	Negative	None	n/a	41	200	n/a	None	A	80	Automatic Controls	Floor 0m
3-C1.1-028	Disposal Hold	1	Disposal Hold	28	16	Adjacent Space Transfer Air	None	No	None	Central Dirty Extract	0	6	Negative	None	n/a	n/a	200	n/a	None	A	80	Automatic Controls	Floor 0m
3-C1.1-029	Mobile X-Ray/Ultrasound Bay	1	Circulation Equipment Storage Bays	28	16	Adjacent Space Transfer Air	None	No	None	Central General Extract	0	3	Negative	None	n/a	n/a	200	n/a	None	A	80	Automatic Controls	Floor 0m
3-C1.1-030	Multi-disciplinary Office	1	Multi Disciplinary Work Areas	28	18	Radiant Panels	Remote Sensor Adj.	Yes	Comfort Cooled Fresh Air	Central Supply and Extract	4	3	Positive	F7	43	n/a	400	n/a	None	A	80	Switch	Desk 0.75 to 0.85m
3-C1.1-031	Reception / Staff Base	1	Reception	28	18	Radiant Panels	Remote Sensor Adj.	Yes	wall Mounted Unit	Central Supply Air	1 people at 10 l/s per person (3ach)	0	Positive	F7	43	n/a	300	n/a	None	A	80	Switch	Desk 0.75 to 0.85m
3-C1.1-032	Isolation Bedroom Entrance Lobby	1	Isolation Lobby	28	21	Warm Air - Reheat Battery	Local / BMS Adjustable Sensor	Yes	Comfort Cooled Fresh Air	Central Supply	48	0	Positive	H14	n/a	41	200	n/a	None	A	80	Automatic Controls	Floor 0m
3-C1.1-033	Single Isolation Bedroom	1	Isolation Bedroom	28	21	Adjacent Space Transfer Air	BMS Adjustable Sensor	Yes	Comfort Cooled Fresh Air	Supply via lobby	10	10 via the ensuite	Balanced	H14	n/a	41	100	5	300	A	80	Switch / Dimmer	Bed / Trolley 1.45m
3-C1.1-034	En-suite wheelchair-accessible WC, Shower & wash	1	Bathroom	28	20	Adjacent Space Transfer Air	None	No	None	Central Dirty Extract	0	42	Negative	None	n/a	41	200	n/a	None	A	80	Automatic Controls	Floor 0m
3-C1.1-035	Isolation Bedroom Entrance Lobby	1	Isolation Lobby	28	21	Warm Air - Reheat Battery	Local / BMS Adjustable Sensor	Yes	Comfort Cooled Fresh Air	Central Supply	38	0	Positive	H14	n/a	41	200	n/a	None	A	80	Automatic Controls	Floor 0m
3-C1.1-036	Single Isolation Bedroom	1	Isolation Bedroom	28	21	Adjacent Space Transfer Air	BMS Adjustable Sensor	Yes	Comfort Cooled Fresh Air	Supply via lobby	10	10 via the ensuite	Balanced	H14	n/a	41	100	5	300	A	80	Switch / Dimmer	Bed / Trolley 1.45m
3-C1.1-037	En-suite wheelchair-accessible WC, Shower & wash	1	Bathroom	28	20	Adjacent Space Transfer Air	None	No	None	Central Dirty Extract	0	42	Negative	None	n/a	41	200	n/a	None	A	80	Automatic Controls	Floor 0m
3-C1.1-038	Touchdown Base	1	staff base	28	18	Radiant Panels	Remote Sensor Adj.	No	None	Central Supply and Extract	1 person at 10l/s/per person (8ach)	1 person at 10l/s/per person (8ach)	Balanced	F7	43	n/a	200/300	n/a	1000	A	80	Switch / Dimmer	General working plane 1m
3-C1.1-039	Isolation Bedroom Entrance Lobby	1	Isolation Lobby	28	21	Warm Air - Reheat Battery	Local / BMS Adjustable Sensor	Yes	Comfort Cooled Fresh Air	Central Supply	50	0	Positive	H14	n/a	41	200	n/a	None	A	80	Automatic Controls	Floor 0m
3-C1.1-040	Single Isolation Bedroom	1	Isolation Bedroom	28	21	Adjacent Space Transfer Air	BMS Adjustable Sensor	Yes	Comfort Cooled Fresh Air	Supply via lobby	10	10 via the ensuite	Balanced	H14	n/a	41	100	5	300	A	80	Switch / Dimmer	Bed / Trolley 1.45m
3-C1.1-041	En-suite wheelchair-accessible WC, Shower & wash	1	Bathroom	28	20	Adjacent Space Transfer Air	None	No	None	Central Dirty Extract	0	42	Negative	None	n/a	41	200	n/a	None	A	80	Automatic Controls	Floor 0m
3-C1.1-042	Clean Utility	1	Clean Utility	28	18	Radiant Panels	Remote Sensor Adj.	Yes	Comfort Cooled Fresh Air	Central Supply Air	6	0	Positive	F7	43	41	150	n/a	None	A	80	Automatic Controls	General working plane 1m
3-C1.1-043	Treatment Room	1	Treatment Room	25	18	Radiant Panels	Remote Sensor Adj.	Yes	Comfort Cooled Fresh Air	Central Supply Air	10	0	Positive	F7	43	41	500	n/a	1000	A	90	Switch	Bed / Trolley 1.45m
3-C1.1-044	Dirty Utility	1	Dirty utility	28	18	Adjacent Space Transfer Air	None	No	None	Central Dirty Extract	0	6	Negative	None	n/a	41	200	n/a	None	A	80	Automatic Controls	Floor 0m

Room No.	Room Name	Qty	Room Function	Temp (max)	Temp (min)	Heating Type	Heating Control	Cooling (present)	Cooling (type)	Ventilation (type)	Supply (ac/hr)	Extract (ac/hr)	Relative pressure	Min filtration	Surface temp	Water temp	Normal lux	Night lux	Local lux	Standby grade	Colour render	Control	Plane
3-C1.1-045	Touchdown Base	1	staff base	28	18	Radiant Panels	Remote Sensor Adj.	Yes	Comfort Cooled Fresh Air	Central Supply Air	1 person at 10l/s/per person (8ach)	0	Positive	F7	43	n/a	200/300	n/a	1000	A	80	Switch / Dimmer	General working plane 1m
3-C1.1-046	4 Bed Room	1	Multi-bed Wards	28	18	Radiant Panels	Remote Sensor Adj.	Yes	Comfort Cooled Fresh Air	Natural and Central Supply Air	4	via ensuite	positive to ensuite	F7	43	41	100	5	300	A	80	switch / dimmer	Bed / Trolley 1.45m
3-C1.1-047	WC Accessible	1	Toilet	28	18	Adjacent Space Transfer Air	None	No	None	Central Dirty Extract	0	10	Negative	None	n/a	41	200	n/a	None	A	80	Automatic Controls	Floor 0m
3-C1.1-048	En-suite wheelchair-accessible WC, Shower & wash	1	Bathroom	28	20	Radiant Panels	Remote Sensor Adj.	No	None	Central Dirty Extract	0	10	Negative	None	43	41	200	n/a	None	A	80	Automatic Controls	Floor 0m
3-C1.1-049	Patients' Assisted Bathroom	1	Bathroom	28	20	Radiant Panels	Remote Sensor Adj.	No	None	Central Dirty Extract	0	10	Negative	None	43	41	200	n/a	None	A	80	Switch	Floor 0m
3-C1.1-050	Patient Interview Room	1	Meeting Room	25	18	Radiant Panels	Remote Sensor Adj.	Yes	Ceiling Cassette - Chilled Water	Central Supply and Extract	4 people at 10 l/s per person (7ach)	4 people at 10 l/s per person (7ach)	Balanced	F7	43	n/a	300	n/a	None	A	80	Switch	Desk 0.75 to 0.85m
3-C1.1-051	Touchdown Base	1	staff base	28	18	Radiant Panels	Remote Sensor Adj.	Yes	Comfort Cooled Fresh Air	Central Supply and Extract	0	0	n/a	n/a	43	n/a	200/300	n/a	1000	A	80	Switch / Dimmer	General working plane 1m
3-C1.1-052	Single Bedroom	1	Bedroom	28	18	Radiant Panels	Remote Sensor Adj.	Yes	Comfort Cooled Fresh Air	Natural & Central Supply Air	4	via ensuite	Balanced	F7	43	41	100	5	300	A	80	Switch / Dimmer	Bed / Trolley 1.45m
3-C1.1-053	En-suite wheelchair-accessible WC, Shower & wash	1	Bathroom	28	20	Radiant Panels	Remote Sensor Adj.	No	None	Central Dirty Extract	0	minimum 10	Negative	None	43	41	200	n/a	None	A	80	Automatic Controls	Floor 0m
3-C1.1-054	Single Bedroom	1	Bedroom	28	18	Radiant Panels	Remote Sensor Adj.	Yes	Comfort Cooled Fresh Air	Natural & Central Supply Air	4	via ensuite	Balanced	F7	43	41	100	5	300	A	80	Switch / Dimmer	Bed / Trolley 1.45m
3-C1.1-055	En-suite wheelchair-accessible WC, Shower & wash	1	Bathroom	28	20	Adjacent Space Transfer Air	None	No	None	Central Dirty Extract	0	minimum 10	Negative	None	n/a	41	200	n/a	None	A	80	Automatic Controls	Floor 0m
3-C1.1-056	Single Bedroom	1	Bedroom	28	18	Radiant Panels	Remote Sensor Adj.	Yes	Comfort Cooled Fresh Air	Natural & Central Supply Air	4	via ensuite	Balanced	F7	43	41	100	5	300	A	80	Switch / Dimmer	Bed / Trolley 1.45m
3-C1.1-057	En-suite wheelchair-accessible WC, Shower & wash	1	Bathroom	28	20	Radiant Panels	Remote Sensor Adj.	No	None	Central Dirty Extract	0	minimum 10	Negative	None	43	41	200	n/a	None	A	80	Automatic Controls	Floor 0m
3-C1.1-058	Single Bedroom	1	Bedroom	28	18	Radiant Panels	Remote Sensor Adj.	Yes	Comfort Cooled Fresh Air	Central Supply and Extract	6	6 via bedroom & ensuite	Balanced	F7	43	41	100	5	300	A	80	Switch / Dimmer	Bed / Trolley 1.45m
3-C1.1-059	En-suite wheelchair-accessible WC, Shower & wash	1	Bathroom	28	20	Radiant Panels	Remote Sensor Adj.	No	None	Central Dirty Extract	0	10	Negative	None	43	41	200	n/a	None	A	80	Automatic Controls	Floor 0m
3-C1.1-060	Single Bedroom	1	Bedroom	28	18	Radiant Panels	Remote Sensor Adj.	Yes	Comfort Cooled Fresh Air	Natural & Central Supply Air	4	via ensuite	Balanced	F7	43	41	100	5	300	A	80	Switch / Dimmer	Bed / Trolley 1.45m
3-C1.1-061	En-suite wheelchair-accessible WC, Shower & wash	1	Bathroom	28	20	Adjacent Space Transfer Air	None	No	None	Central Dirty Extract	0	10	Negative	None	n/a	41	200	n/a	None	A	80	Automatic Controls	Floor 0m
3-C1.1-062	Touchdown Base	1	staff base	28	18	Radiant Panels	Remote Sensor Adj.	Yes	Comfort Cooled Fresh Air	None	0	0	n/a	n/a	43	n/a	200/300	n/a	1000	A	80	Switch / Dimmer	General working plane 1m
3-C1.1-063	Single Bedroom	1	Bedroom	28	18	Radiant Panels	Remote Sensor Adj.	Yes	Comfort Cooled Fresh Air	Natural & Central Supply Air	4	via ensuite	Balanced	F7	43	41	100	5	300	A	80	Switch / Dimmer	Bed / Trolley 1.45m
3-C1.1-064	En-suite wheelchair-accessible WC, Shower & wash	1	Bathroom	28	20	Adjacent Space Transfer Air	None	No	None	Central Dirty Extract	0	minimum 10	Negative	None	n/a	41	200	n/a	None	A	80	Automatic Controls	Floor 0m
3-C1.1-065	Single Bedroom	1	Bedroom	28	18	Radiant Panels	Remote Sensor Adj.	Yes	Comfort Cooled Fresh Air	Natural & Central Supply Air	4	via ensuite	Balanced	F7	43	41	100	5	300	A	80	Switch / Dimmer	Bed / Trolley 1.45m
3-C1.1-066	En-suite wheelchair-accessible WC, Shower & wash	1	Bathroom	28	20	Radiant Panels	Remote Sensor Adj.	No	None	Central Dirty Extract	0	minimum 10	Negative	None	43	41	200	n/a	None	A	80	Automatic Controls	Floor 0m
3-C1.1-067	Single Bedroom	1	Bedroom	28	18	Radiant Panels	Remote Sensor Adj.	Yes	Comfort Cooled Fresh Air	Natural & Central Supply Air	4	via ensuite	Balanced	F7	43	41	100	5	300	A	80	Switch / Dimmer	Bed / Trolley 1.45m
3-C1.1-068	En-suite wheelchair-accessible WC, Shower & wash	1	Bathroom	28	20	Adjacent Space Transfer Air	None	No	None	Central Dirty Extract	0	minimum 10	Negative	None	n/a	41	200	n/a	None	A	80	Automatic Controls	Floor 0m
3-C1.1-070	WC - Visitors	1	Toilet	28	18	Adjacent Space Transfer Air	None	No	None	Central Dirty Extract	0	10	Negative	None	n/a	41	200	n/a	None	A	80	Automatic Controls	Floor 0m
3-C1.1-001	Corridor	1	Corridor	28	18	Radiant Panels	Remote Sensor Adj.	No	None	None	0	0	n/a	None	43	n/a	200	n/a	None	A	80	Automatic Controls	Floor 0m
3-C1.1-071	Corridor	1	Corridor	28	18	Radiant Panels	Remote Sensor Adj.	No	None	None	0	0	n/a	None	43	n/a	200	n/a	None	A	80	Automatic Controls	Floor 0m
3-C1.1-073	Corridor	1	Corridor	28	18	Radiant Panels	Remote Sensor Adj.	No	None	None	0	0	n/a	None	43	n/a	200	n/a	None	A	80	Automatic Controls	Floor 0m
3-C1.1-072	Switch Cupboard	1	Switch Cupboard	Not Controlled	Not Controlled	None	None	No	None	None	0	0	n/a	None	n/a	n/a	100	n/a	None	A	80	Automatic Controls	Floor 0m
3-C1.2-002	Single Bedroom (RHSC)	1	Bedroom	28	18	Radiant Panels	Remote Sensor Adj.	Yes	Comfort Cooled Fresh Air	Natural & Central Supply Air	4	via ensuite	Balanced	F7	43	41	100	5	300	A	80	Switch / Dimmer	Bed / Trolley 1.45m
3-C1.2-003	En-suite wheelchair-accessible WC, Shower & wash	1	Bathroom	28	20	Radiant Panels	Remote Sensor Adj.	No	None	Central Dirty Extract	0	minimum 10	Negative	None	43	41	200	n/a	None	A	80	Automatic Controls	Floor 0m
3-C1.2-004	Linen Bay (1 Trolley)	1	Linen Bay	28	16	Adjacent Space Transfer	None	No	None	None	0	0	n/a	None	n/a	n/a	100 (KNX)	n/a	None	A	80	Automatic Controls	Floor 0m
3-C1.2-005	Single Bedroom (RHSC)	1	Bedroom	28	18	Radiant Panels	Remote Sensor Adj.	Yes	Comfort Cooled Fresh Air	Natural & Central Supply Air	4	via ensuite	Balanced	F7	43	41	100	5	300	A	80	Switch / Dimmer	Bed / Trolley 1.45m
3-C1.2-006	En-suite wheelchair-accessible WC, Shower & wash	1	Bathroom	28	20	Adjacent Space Transfer Air	None	No	None	Central Dirty Extract	0	minimum 10	Negative	None	n/a	41	200	n/a	None	A	80	Automatic Controls	Floor 0m
3-C1.2-007	Single Bedroom (RHSC)	1	Bedroom	28	18	Radiant Panels	Remote Sensor Adj.	Yes	Comfort Cooled Fresh Air	Natural & Central Supply Air	4	via ensuite	Balanced	F7	43	41	100	5	300	A	80	Switch / Dimmer	Bed / Trolley 1.45m
3-C1.2-008	En-suite wheelchair-accessible WC, Shower & wash	1	Bathroom	28	20	Radiant Panels	Remote Sensor Adj.	No	None	Central Dirty Extract	0	minimum 10	Negative	None	43	41	200	n/a	None	A	80	Automatic Controls	Floor 0m
3-C1.2-009	Touchdown Base	1	staff base	28	18	Radiant Panels	Remote Sensor Adj.	Yes	Comfort Cooled Fresh Air	Central Supply and Extract	0	0	n/a	n/a	43	n/a	200/300	n/a	1000	A	80	Switch / Dimmer	General working plane 1m
3-C1.2-010	Single Bedroom (RHSC)	1	Bedroom	28	18	Radiant Panels	Remote Sensor Adj.	Yes	Comfort Cooled Fresh Air	Natural & Central Supply Air	4	via ensuite	Balanced	F7	43	41	100	5	300	A	80	Switch / Dimmer	Bed / Trolley 1.45m
3-C1.2-011	En-suite wheelchair-accessible WC, Shower & wash	1	Bathroom	28	20	Adjacent Space Transfer Air	None	No	None	Central Dirty Extract	0	minimum 10	Negative	None	n/a	41	200	n/a	None	A	80	Automatic Controls	Floor 0m
3-C1.2-012	Dirty Utility	1	Dirty utility	28	18	Adjacent Space Transfer Air	None	No	None	Central Dirty Extract	0	6	Negative	None	n/a	41	200	n/a	None	A	80	Automatic Controls	Floor 0m
3-C1.2-013	DSR	1	DSR	28	18	Adjacent Space Transfer Air	None	No	None	Central Dirty Extract	0	6	Negative	None	n/a	60	100	n/a	None	A	80	Automatic Controls	Floor 0m
3-C1.2-014	Single Bedroom (RHSC)	1	Bedroom	28	18	Radiant Panels	Remote Sensor Adj.	Yes	Comfort Cooled Fresh Air	Natural & Central Supply Air	4	via ensuite	Balanced	F7	43	41	100	5	300	A	80	Switch / Dimmer	Bed / Trolley 1.45m
3-C1.2-015	En-suite wheelchair-accessible WC, Shower & wash	1	Bathroom	28	20	Radiant Panels	Remote Sensor Adj.	No	None	Central Dirty Extract	0	minimum 10	Negative	None	43	41	200	n/a	None	A	80	Automatic Controls	Floor 0m
3-C1.2-016	Hoist Bay	1	Circulation Equipment Storage Bays	28	16	Adjacent Space Transfer	None	No	None	None	0	0	n/a	None	n/a	n/a	200	n/a	None	A	80	Automatic Controls	Floor 0m
3-C1.2-017	Patients' Assisted Bathroom	1	Bathroom	28	20	Radiant Panels	Remote Sensor Adj.	No	None	Central Dirty Extract	0	10	Negative	None	43	41	200	n/a	None	A	80	Switch	Floor 0m
3-C1.2-018	Single Bedroom	1	Bedroom	28	18	Radiant Panels	Remote Sensor Adj.	Yes	Comfort Cooled Fresh Air	Natural & Central Supply Air	4	via ensuite	Balanced	F7	43	41	100	5	300	A	80	Switch / Dimmer	Bed / Trolley 1.45m
3-C1.2-019	En-suite wheelchair-accessible WC, Shower & wash	1	Bathroom	28	20	Radiant Panels	Remote Sensor Adj.	No	None	Central Dirty Extract	0	minimum 10	Negative	None	43	41	200	n/a	None	A	80	Automatic Controls	Floor 0m
3-C1.2-020	Single Bedroom	1	Bedroom	28	18	Radiant Panels	Remote Sensor Adj.	Yes	Comfort Cooled Fresh Air	Natural & Central Supply Air	4	via ensuite	Balanced	F7	43	41	100	5	300	A	80	Switch / Dimmer	Bed / Trolley 1.45m
3-C1.2-021	En-suite wheelchair-accessible WC, Shower & wash	1	Bathroom	28	20	Adjacent Space Transfer Air	None	No	None	Central Dirty Extract	0	minimum 10	Negative	None	n/a	41	200	n/a	None	A	80	Automatic Controls	Floor 0m
3-C1.2-022	Touchdown Base	1	staff base	28	18	Radiant Panels	Remote Sensor Adj.	Yes	Comfort Cooled Fresh Air	None	0	0	n/a	n/a	43	n/a	200/300	n/a	1000	A	80	Switch / Dimmer	General working plane 1m

Room No.	Room Name	Qty	Room Function	Temp (max)	Temp (min)	Heating Type	Heating Control	Cooling (present)	Cooling (type)	Ventilation (type)	Supply (ac/hr)	Extract (ac/hr)	Relative pressure	Min filtration	Surface temp	Water temp	Normal lux	Night lux	Local lux	Standby grade	Colour render	Control	Plane
3-C1.2-023	4 Bed Room	1	Multi-bed Wards	28	18	Radiant Panels	Remote Sensor Adj.	Yes	Comfort Cooled Fresh Air	Natural and Central Supply Air	4	via ensuite	positive to ensuite	F7	43	41	100	5	300	A	80	switch / dimmer	Bed / Trolley 1.45m
3-C1.2-024	WC Accessible	1	Toilet	28	18	Radiant Panels	Remote Sensor Adj.	No	None	Central Dirty Extract	0	10	Negative	None	43	41	200	n/a	None	A	80	Automatic Controls	Floor 0m
3-C1.2-025	Wetroom	1	Bathroom	28	20	Radiant Panels	Remote Sensor Adj.	No	None	Central Dirty Extract	0	10	Negative	None	43	41	200	n/a	None	A	80	Automatic Controls	Floor 0m
3-C1.2-026	4 Bed Room	1	Multi-bed Wards	28	18	Radiant Panels	Remote Sensor Adj.	Yes	Comfort Cooled Fresh Air	Natural and Central Supply Air	4	via ensuite	positive to ensuite	F7	43	41	100	5	300	A	80	switch / dimmer	Bed / Trolley 1.45m
3-C1.2-027	WC Accessible	2	Toilet	28	18	Radiant Panels	Remote Sensor Adj.	No	None	Central Dirty Extract	0	10	Negative	None	43	41	200	n/a	None	A	80	Automatic Controls	Floor 0m
3-C1.2-028	Ward Management Office	1	Cellular / Ward Offices	28	18	Radiant Panels	Remote Sensor Adj.	Yes	Comfort Cooled Fresh Air	Central Supply and Extract	4	3	Positive	F7	43	n/a	400	n/a	None	A	80	Switch	Desk 0.75 to 0.85m
3-C1.2-029	Resuscitation Trolley Bay	1	Resus Trolley bay	28	16	Adjacent Space Transfer Air	None	No	None	Central General Extract	0	3	Negative	None	n/a	n/a	200	n/a	None	A	80	Automatic Controls	Floor 0m
3-C1.2-030	Store - Equipment	1	Storage Area Equipment	28	16	Adjacent Space Transfer Air	None	No	None	Central General Extract	0	3	Negative	None	n/a	n/a	200	n/a	None	A	80	Automatic Controls	Floor 0m
3-C1.2-031	Clean Utility	1	Clean Utility	28	18	Radiant Panels	Remote Sensor Adj.	Yes	Comfort Cooled Fresh Air	Central Supply Air	6	0	Positive	F7	43	41	150	n/a	None	A	80	Automatic Controls	General working plane 1m
3-C1.2-032	Treatment Room	1	Treatment Room	25	18	Radiant Panels	Remote Sensor Adj.	Yes	Comfort Cooled Fresh Air	Central Supply Air	10	0	Positive	F7	43	41	500	n/a	1000	A	90	Switch	Bed / Trolley 1.45m
3-C1.2-033	Dining / Play Room	1	Eating/Drinking	28	18	Radiant Panels	Remote Sensor Adj.	Yes	Comfort Cooled Fresh Air	Central Supply and Extract	5 people at 10 l/s per person (5ach)	5 people at 10 l/s per person (5ach)	Balanced	F7	43	41	300	n/a	None	A	80	Switch	Floor 0m
3-C1.2-034	Ward kitchen	1	Ward Kitchen	28	18	Radiant Panels	Remote Sensor Adj.	Yes	Ceiling Cassette - Chilled Water	Central General Extract	0	6	Negative	None	43	60	500	n/a	None	A	80	Switch	General working plane 1m
3-C1.2-035	Patient Interview Room	1	Meeting Room	25	18	Radiant Panels	Remote Sensor Adj.	Yes	Ceiling Cassette - Chilled Water	Central Supply and Extract	5 people at 10 l/s per person (8ach)	5 people at 10 l/s per person (8ach)	Balanced	F7	43	n/a	300	n/a	None	A	80	Switch	Desk 0.75 to 0.85m
3-C1.2-036	Reception / Staff Base	1	Reception	28	18	Adjacent Space Transfer Air	None	Yes	Comfort Cooled Fresh Air	Central Supply Air	3	0	Positive	F7	n/a	n/a	300	n/a	None	A	80	Switch	Desk 0.75 to 0.85m
3-C1.2-037	Discharge Lounge	1	Common room/staff room/lounge	28	18	Radiant Panels	Remote Sensor Adj.	Yes	Comfort Cooled Fresh Air	Central Supply and Extract	6	8	Negative	F7	43	41	300	n/a	None	A	80	Switch	Floor 0m
3-C1.2-038	Disposal Hold	1	Disposal Hold	28	16	Adjacent Space Transfer Air	None	No	None	Central Dirty Extract	0	6	Negative	None	n/a	n/a	200	n/a	None	A	80	Automatic Controls	Floor 0m
3-C1.2-039	Store - General	1	Storage Area Equipment	28	16	Adjacent Space Transfer Air	None	No	None	Central General Extract	0	3	Negative	None	n/a	n/a	200	n/a	None	A	80	Automatic Controls	Floor 0m
3-C1.2-040	WC - Staff	1	Toilet	28	18	Adjacent Space Transfer Air	None	No	None	Central Dirty Extract	0	10	Negative	None	n/a	41	200	n/a	None	A	80	Automatic Controls	Floor 0m
3-C1.2-041	WC - Visitors	1	Toilet	28	18	Adjacent Space Transfer Air	None	No	None	Central Dirty Extract	0	10	Negative	None	n/a	41	200	n/a	None	A	80	Automatic Controls	Floor 0m
3-C1.2-042	Touchdown Base	1	Staff base	28	18	Radiant Panels	Remote Sensor Adj.	Yes	Comfort Cooled Fresh Air	None	0	0	n/a	n/a	43	n/a	200/300	n/a	1000	A	80	Switch / Dimmer	General working plane 1m
3-C1.2-043	Multi-Disciplinary Office	1	Multi Disciplinary Work Areas	28	18	Radiant Panels	Remote Sensor Adj.	Yes	Comfort Cooled Fresh Air	Central Supply and Extract	4	3	Positive	F7	43	n/a	400	n/a	None	A	80	Switch	Desk 0.75 to 0.85m
3-C1.2-044	WC - Staff	1	Toilet	28	18	Adjacent Space Transfer Air	None	No	None	Central Dirty Extract	0	10	Negative	None	n/a	41	200	n/a	None	A	80	Automatic Controls	Floor 0m
3-C1.2-001	Corridor	1	Corridor	28	18	Radiant Panels	Remote Sensor Adj.	No	None	None	0	0	n/a	None	43	n/a	200	n/a	None	A	80	Automatic Controls	Floor 0m
3-C1.2-045	Corridor	1	Corridor	28	18	Radiant Panels	Remote Sensor Adj.	No	None	None	0	0	n/a	None	43	n/a	200	n/a	None	A	80	Automatic Controls	Floor 0m
3-C1.2-046	Switch Cupboard	1	Switch Cupboard	Not Controlled	Not Controlled	None	None	No	None	None	0	0	n/a	None	n/a	n/a	100	n/a	None	A	80	Automatic Controls	Floor 0m
3-C1.3-002	Waiting Area	1	Waiting Room	28	18	Radiant Panels	Remote Sensor Adj.	Yes	Ceiling Cassette - Chilled Water	Central Supply and Extract	5	5	Balanced	F7	43	n/a	300	n/a	None	A	80	Switch	Floor 0m
3-C1.3-003	Reception / Staff Base	1	Reception	28	18	Radiant Panels	Remote Sensor Adj.	Yes	Wall Mounted Unit	Central Supply Air	3	0	Positive	F7	43	n/a	300	n/a	None	A	80	Automatic Controls	Desk 0.75 to 0.85m
3-C1.3-004	WC Accessible	1	Toilet	28	18	Adjacent Space Transfer Air	None	No	None	Central Dirty Extract	0	10	Negative	None	n/a	41	200	n/a	None	A	80	Automatic Controls	Floor 0m
3-C1.3-005	Store - Equipment	1	Storage Area Equipment	28	16	Adjacent Space Transfer Air	None	No	None	Central General Extract	0	3	Negative	None	n/a	n/a	200	n/a	None	A	80	Automatic Controls	Floor 0m
3-C1.3-006	Touchdown Base	1	Staff base	28	18	Radiant Panels	Remote Sensor Adj.	Yes	Comfort Cooled Fresh Air	Central Supply Air	1 person at 10l/s/per person (7ach)	0	Positive	F7	43	n/a	200/300	n/a	1000	A	80	Switch / Dimmer	Desk 0.75 to 0.85m
3-C1.3-007	Isolation Bedroom Entrance Lobby	1	Isolation Lobby	28	21	Warm Air - Reheat Battery	Local / BMS Adjustable Sensor	Yes	Comfort Cooled Fresh Air	Central Supply	64	0	Positive	H14	n/a	41	200	n/a	None	A	80	Automatic Controls	Floor 0m
3-C1.3-008	Single Isolation Bedroom (RHSC)	1	Isolation Bedroom	28	21	Adjacent Space Transfer Air	BMS Adjustable Sensor	Yes	Comfort Cooled Fresh Air	Supply via lobby	10	10 via the ensuite	Balanced	H14	n/a	41	100	5	300	A	80	Switch / Dimmer	Bed / Trolley 1.45m
3-C1.3-009	En-suite wheelchair-accessible WC, Shower & wash Isol	1	Bathroom	28	20	Adjacent Space Transfer Air	None	No	None	Central Dirty Extract	0	43	Negative	None	n/a	41	200	n/a	None	A	80	Automatic Controls	Floor 0m
3-C1.3-010	En-suite	1	Bathroom	28	20	Radiant Panels	Remote Sensor Adj.	No	None	Central Dirty Extract	0	10	Negative	None	43	41	200	n/a	None	A	80	Automatic Controls	Floor 0m
3-C1.3-011	4 Bed Room	1	Multi-bed Wards	28	18	Radiant Panels	Remote Sensor Adj.	Yes	Ceiling Cassette - Chilled Water	Natural and Central Supply Air	4	via ensuite	positive to ensuite	F7	43	41	100	5	300	A	80	switch / dimmer	Bed / Trolley 1.45m
3-C1.3-012	Wetroom	1	Bathroom	28	20	Adjacent Space Transfer Air	None	No	None	Central Dirty Extract	0	10	Negative	None	n/a	41	200	n/a	None	A	80	Automatic Controls	Floor 0m
3-C1.3-013	4 Bed Room	1	Multi-bed Wards	28	18	Radiant Panels	Remote Sensor Adj.	Yes	Ceiling Cassette - Chilled Water	Natural and Central Supply Air	4	via ensuite	positive to ensuite	F7	43	41	100	5	300	A	80	switch / dimmer	Bed / Trolley 1.45m
3-C1.3-014	En-suite	1	Bathroom	28	20	Radiant Panels	Remote Sensor Adj.	No	None	Central Dirty Extract	0	10	Negative	None	43	41	200	n/a	None	A	80	Automatic Controls	Floor 0m
3-C1.3-015	Resuscitation Trolley Bay	1	Resus Trolley bay	28	18	Adjacent Space Transfer Air	None	No	None	Central General Extract	0	3	negative	None	n/a	n/a	200	n/a	None	A	80	Automatic Controls	Floor 0m
3-C1.3-016	Linen Bay	1	Linen Bay	28	16	Adjacent Space Transfer Air	None	No	None	None	0	0	n/a	None	n/a	n/a	100 (KNX)	n/a	None	A	80	Automatic Controls	Floor 0m
3-C1.3-017	Store - General	1	Storage Area Equipment	28	16	Adjacent Space Transfer Air	None	No	None	Central General Extract	0	3	Negative	None	n/a	n/a	200	n/a	None	A	80	Automatic Controls	Floor 0m
3-C1.3-018	Multi-Disciplinary Office	1	Multi Disciplinary Work Areas	28	18	Radiant Panels	Remote Sensor Adj.	Yes	Ceiling Cassette - Chilled Water	Central Supply and Extract	4	3	Positive	F7	43	n/a	400	n/a	None	A	80	Switch	Desk 0.75 to 0.85m
3-C1.3-019	Patient Interview Room	1	Meeting Room	25	18	Radiant Panels	Remote Sensor Adj.	Yes	Ceiling Cassette - Chilled Water	Central Supply and Extract	4 people at 10 l/s per person (6ach)	4 people at 10 l/s per person (6ach)	Balanced	F7	43	n/a	300	n/a	None	A	80	Automatic Controls	Desk 0.75 to 0.85m
3-C1.3-020	Ward Management Office	1	Cellular / Ward Offices	28	18	Radiant Panels	Remote Sensor Adj.	Yes	Comfort Cooled Fresh Air	Central Supply and Extract	4	3	Positive	F7	43	n/a	400	n/a	None	A	80	Switch	Desk 0.75 to 0.85m
3-C1.3-021	WC - Staff	1	Toilet	28	18	Adjacent Space Transfer Air	None	No	None	Central Dirty Extract	0	10	Negative	None	n/a	41	200	n/a	None	A	80	Automatic Controls	Floor 0m
3-C1.3-022	WC - Staff	1	Toilet	28	18	Adjacent Space Transfer Air	None	No	None	Central Dirty Extract	0	10	Negative	None	n/a	41	200	n/a	None	A	80	Automatic Controls	Floor 0m
3-C1.3-023	WC - Visitors	1	Toilet	28	18	Adjacent Space Transfer Air	None	No	None	Central Dirty Extract	0	10	Negative	None	n/a	41	200	n/a	None	A	80	Automatic Controls	Floor 0m
3-C1.3-024	Snoezelen Room	1	Consulting Room	25	18	Radiant Panels	Remote Sensor Adj.	Yes	Comfort Cooled Fresh Air	Central Supply and Extract	3	3	Balanced	F7	43	41	300	n/a	1000	A	80	Switch	Bed / Trolley 1.45m
3-C1.3-025	Rehabilitation Room	1	Consulting Room	25	18	Radiant Panels	Remote Sensor Adj.	Yes	Comfort Cooled Fresh Air	Central Supply and Extract	3	3	Balanced	F7	43	41	300	n/a	1000	A	80	Switch	Bed / Trolley 1.45m
3-C1.3-026	Hoist Bay	1	Circulation Equipment Storage Bays	28	16	Adjacent Space Transfer Air	None	No	None	Central General Extract	0	3	Negative	None	n/a	n/a	200	n/a	None	A	80	Automatic Controls	Floor 0m

Room No.	Room Name	Qty	Room Function	Temp (max)	Temp (min)	Heating Type	Heating Control	Cooling (present)	Cooling (type)	Ventilation (type)	Supply (ac/hr)	Extract (ac/hr)	Relative pressure	Min filtration	Surface temp	Water temp	Normal lux	Night lux	Local lux	Standby grade	Colour render	Control	Plane
3-C1.3-027	Touchdown Base	1	Staff base	28	18	Radiant Panels	Remote Sensor Adj.	Yes	Comfort Cooled Fresh Air	Central Supply Air	1 person at 10l/s/per person (7ach)	0	Positive	F7	43	n/a	200/300	n/a	1000	A	80	Switch / Dimmer	Desk 0.75 to 0.85m
3-C1.3-028	Single Bedroom (RHSC)	1	Bedroom	28	18	Radiant Panels	Remote Sensor Adj.	Yes	Comfort Cooled Fresh Air	Natural & Central Supply Air	4	via ensuite	Balanced	F7	43	41	100	5	300	A	80	Switch / Dimmer	Bed / Trolley 1.45m
3-C1.3-029	En-suite wheelchair-accessible WC, Shower & wash	1	Bathroom	28	20	Radiant Panels	Remote Sensor Adj.	No	None	Central Dirty Extract	0	10	Negative	None	43	41	200	n/a	None	A	80	Automatic Controls	Floor 0m
3-C1.3-030	Single Bedroom (RHSC)	1	Bedroom	28	18	Radiant Panels	Remote Sensor Adj.	Yes	Comfort Cooled Fresh Air	Natural & Central Supply Air	4	via ensuite	Balanced	F7	43	41	100	5	300	A	80	Switch / Dimmer	Bed / Trolley 1.45m
3-C1.3-031	En-suite wheelchair-accessible WC, Shower & wash	1	Bathroom	28	20	Radiant Panels	Remote Sensor Adj.	No	None	Central Dirty Extract	0	10	Negative	None	43	41	200	n/a	None	A	80	Automatic Controls	Floor 0m
3-C1.3-032	Single Bedroom (RHSC)	1	Bedroom	28	18	Radiant Panels	Remote Sensor Adj.	Yes	Comfort Cooled Fresh Air	Natural & Central Supply Air	4	via ensuite	Balanced	F7	43	41	100	5	300	A	80	Switch / Dimmer	Bed / Trolley 1.45m
3-C1.3-033	En-suite wheelchair-accessible WC, Shower & wash	1	Bathroom	28	20	Adjacent Space Transfer Air	None	No	None	Central Dirty Extract	0	minimum 10	Negative	None	n/a	41	200	n/a	None	A	80	Automatic Controls	Floor 0m
3-C1.3-034	Ward Kitchen	1	Ward Kitchen	28	18	Radiant Panels	Remote Sensor Adj.	No	None	Central General Extract	0	6	Negative	None	43	60	500	n/a	None	A	80	Switch	General working plane 1m
3-C1.3-035	Patients' Assisted Bathroom	1	Bathroom	28	20	Radiant Panels	Remote Sensor Adj.	No	None	Central Dirty Extract	0	10	Negative	None	43	41	200	n/a	None	A	80	Switch	Floor 0m
3-C1.3-036	Dirty Utility	1	Dirty utility	28	18	Adjacent Space Transfer Air	None	No	None	Central Dirty Extract	0	6	Negative	None	n/a	41	200	n/a	None	A	80	Automatic Controls	Floor 0m
3-C1.3-037	Treatment Room	1	Treatment Room	25	18	Radiant Panels	Remote Sensor Adj.	Yes	Comfort Cooled Fresh Air	Central Supply Air	10	0	Positive	F7	43	41	500	n/a	1000	A	90	Switch	Bed / Trolley 1.45m
3-C1.3-038	Clean Utility	1	Clean Utility	28	18	Radiant Panels	Remote Sensor Adj.	Yes	Comfort Cooled Fresh Air	Central Supply Air	6	0	Positive	F7	43	41	150	n/a	None	A	80	Automatic Controls	General working plane 1m
3-C1.3-039	Dining / Play Room	1	Eating/Drinking	28	18	Radiant Panels	Remote Sensor Adj.	Yes	Comfort Cooled Fresh Air	Central Supply and Extract	6 people at 10 l/s per person (5ach)	6 people at 10 l/s per person (5ach)	Balanced	F7	43	41	300	n/a	None	A	80	Switch	Floor 0m
3-C1.3-040	DSR	1	DSR	28	18	Adjacent Space Transfer Air	None	No	None	Central Dirty Extract	0	6	Negative	None	n/a	60	100	n/a	None	A	80	Automatic Controls	Floor 0m
3-C1.3-041	Disposal Hold	1	Disposal Hold	28	16	Adjacent Space Transfer Air	None	No	None	Central Dirty Extract	0	6	Negative	None	n/a	n/a	200	n/a	None	A	80	Automatic Controls	Floor 0m
3-C1.3-001	Corridor	1	Corridor	28	18	Radiant Panels	Remote Sensor Adj.	No	None	None	0	0	n/a	None	43	N/a	200	n/a	None	A	80	Automatic Controls	Floor 0m
3-C1.4-002	Quiet Study Room	1	Cellular / Ward Offices	28	18	Radiant Panels	Remote Sensor Adj.	Yes	Comfort Cooled Fresh Air	Central Supply and Extract	4	3	Positive	F7	43	n/a	400	n/a	None	A	80	Switch	Desk 0.75 to 0.85m
3-C1.4-004	Disposal Hold	1	Disposal Hold	28	16	Adjacent Space Transfer Air	None	No	None	Central Dirty Extract	0	6	Negative	None	n/a	n/a	200	n/a	None	A	80	Automatic Controls	Floor 0m
3-C1.4-005	DSR	1	DSR	28	18	Adjacent Space Transfer Air	None	No	None	Central Dirty Extract	0	6	Negative	None	n/a	60	100	n/a	None	A	80	Automatic Controls	Floor 0m
3-C1.4-006	Store - General	1	Storage Area Equipment	28	16	Adjacent Space Transfer Air	None	No	None	Central General Extract	0	3	Negative	None	n/a	n/a	200	n/a	None	A	80	Automatic Controls	Floor 0m
3-C1.4-007	Patient Interview Room	1	Meeting Room	25	18	Radiant Panels	Remote Sensor Adj.	Yes	Ceiling Cassette - Chilled Water	Central Supply and Extract	4 people at 10 l/s per person (6ach)	4 people at 10 l/s per person (6ach)	Balanced	F7	43	n/a	300	n/a	None	A	80	Switch	Desk 0.75 to 0.85m
3-C1.4-008	Complementary Therapy Room	1	Consulting Room	25	18	Radiant Panels	Remote Sensor Adj.	Yes	Comfort Cooled Fresh Air	Central Supply and Extract	3	3	Balanced	F7	43	41	300	n/a	1000	A	80	Switch	Bed / Trolley 1.45m
3-C1.4-009	En-suite wheelchair-accessible WC, Shower & wash	1	Bathroom	28	20	Radiant Panels	Remote Sensor Adj.	No	None	Central Dirty Extract	0	minimum 10	Negative	None	43	41	200	n/a	None	A	80	Automatic Controls	Floor 0m
3-C1.4-010	Single Bedroom (RHSC)	1	Bedroom	28	18	Radiant Panels	Remote Sensor Adj.	Yes	Comfort Cooled Fresh Air	Natural & Central Supply Air	4	via ensuite	Balanced	F7	43	41	100	5	300	A	80	Switch / Dimmer	Bed / Trolley 1.45m
3-C1.4-011	Patients' Assisted Bathroom	1	Bathroom	28	20	Radiant Panels	Remote Sensor Adj.	No	None	Central Dirty Extract	0	10	Negative	None	43	41	200	n/a	None	A	80	Switch	Floor 0m
3-C1.4-012	Touchdown Base	1	Staff base	28	18	Radiant Panels	Remote Sensor Adj.	Yes	Comfort Cooled Fresh Air	Central Supply Air	1 person at 10l/s/per person (7ach)	0	Positive	F7	n/a	n/a	200/300	n/a	1000	A	80	Switch / Dimmer	Desk 0.75 to 0.85m
3-C1.4-013	Single Bedroom (RHSC)	1	Bedroom	28	18	Radiant Panels	Remote Sensor Adj.	Yes	Comfort Cooled Fresh Air	Natural & Central Supply Air	4	via ensuite	Balanced	F7	43	41	100	5	300	A	80	Switch / Dimmer	Bed / Trolley 1.45m
3-C1.4-014	En-suite wheelchair-accessible WC, Shower & wash	1	Bathroom	28	20	Radiant Panels	Remote Sensor Adj.	No	None	Central Dirty Extract	0	minimum 10	Negative	None	43	41	200	n/a	None	A	80	Automatic Controls	Floor 0m
3-C1.4-015	Kitchen/ Lounge/Social Space	1	Common room/staff room/lounge	28	18	Radiant Panels	Remote Sensor Adj.	Yes	Ceiling Cassette - Chilled Water	Central Supply and Extract	6	8	Negative	F7	43	41	300	n/a	None	A	80	Switch	Floor 0m
3-C1.4-016	Single Bedroom (RHSC)	1	Bedroom	28	18	Radiant Panels	Remote Sensor Adj.	Yes	Comfort Cooled Fresh Air	Natural & Central Supply Air	4	via ensuite	Balanced	F7	43	41	100	5	300	A	80	Switch / Dimmer	Bed / Trolley 1.45m
3-C1.4-017	En-suite wheelchair-accessible WC, Shower & wash	1	Bathroom	28	20	Adjacent Space Transfer Air	None	No	None	Central Dirty Extract	0	minimum 10	Negative	None	43	41	200	n/a	None	A	80	Automatic Controls	Floor 0m
3-C1.4-018	Single Bedroom (RHSC)	1	Bedroom	28	18	Radiant Panels	Remote Sensor Adj.	Yes	Comfort Cooled Fresh Air	Natural & Central Supply Air	4	via ensuite	Balanced	F7	43	41	100	5	300	A	80	Switch / Dimmer	Bed / Trolley 1.45m
3-C1.4-019	En-suite wheelchair-accessible WC, Shower & wash	1	Bathroom	28	20	Adjacent Space Transfer Air	None	No	None	Central Dirty Extract	0	10	Negative	None	n/a	41	200	n/a	None	A	80	Automatic Controls	Floor 0m
3-C1.4-021	Hoist Bay	1	Circulation Equipment Storage Bays	28	16	Adjacent Space Transfer	None	No	None	None	0	0	n/a	None	n/a	n/a	200	n/a	None	A	80	Automatic Controls	Floor 0m
3-C1.4-022	Dirty Utility	1	Dirty utility	28	18	Adjacent Space Transfer Air	None	No	None	Central Dirty Extract	0	6	Negative	None	n/a	41	200	n/a	None	A	80	Automatic Controls	Floor 0m
3-C1.4-023	Pharmacy Base	1	Pharmacy Base	25	18	Radiant Panels	Remote Sensor Adj.	Yes	Wall Mounted Unit	Central Supply and Extract	3	3	Balanced	F7	43	41	300	n/a	1000	A	80	Switch	Bed / Trolley 1.45m
3-C1.4-024	Multi-Disciplinary Office	1	Multi Disciplinary Work Areas	28	18	Radiant Panels	Remote Sensor Adj.	Yes	Comfort Cooled Fresh Air	Central Supply and Extract	4	3	Positive	F7	43	n/a	400	n/a	None	A	80	Switch	Desk 0.75 to 0.85m
3-C1.4-025	Medical Staff Office	1	Cellular / Ward Offices	28	18	Radiant Panels	Remote Sensor Adj.	Yes	Comfort Cooled Fresh Air	Central Supply and Extract	4	3	Positive	F7	43	n/a	400	n/a	None	A	80	Switch	Desk 0.75 to 0.85m
3-C1.4-026	Consultant Office (5 person)	1	Cellular / Ward Offices	28	18	Radiant Panels	Remote Sensor Adj.	Yes	Comfort Cooled Fresh Air	Central Supply and Extract	4	3	Positive	F7	43	n/a	400	n/a	None	A	80	Switch	Desk 0.75 to 0.85m
3-C1.4-027	Store - Equipment	1	Storage Area Equipment	28	16	Adjacent Space Transfer Air	None	No	None	Central General Extract	0	3	Negative	None	n/a	n/a	200	n/a	None	A	80	Automatic Controls	Floor 0m
3-C1.4-028	Research Staff Office	1	Cellular / Ward Offices	28	18	Radiant Panels	Remote Sensor Adj.	Yes	Comfort Cooled Fresh Air	Central Supply and Extract	4	3	Positive	F7	43	n/a	400	n/a	None	A	80	Switch	Desk 0.75 to 0.85m
3-C1.4-029	Nursing Staff Office	1	Cellular / Ward Offices	28	18	Radiant Panels	Remote Sensor Adj.	Yes	Comfort Cooled Fresh Air	Central Supply and Extract	4	3	Positive	F7	43	n/a	400	n/a	None	A	80	Switch	Desk 0.75 to 0.85m
3-C1.4-030	Ward Management Office	1	Cellular / Ward Offices	28	18	Radiant Panels	Remote Sensor Adj.	Yes	Comfort Cooled Fresh Air	Central Supply and Extract	4	3	Positive	F7	43	n/a	400	n/a	None	A	80	Switch	Desk 0.75 to 0.85m
3-C1.4-032	Single Bedroom (RHSC)	1	Bedroom	28	18	Radiant Panels	Remote Sensor Adj.	Yes	Comfort Cooled Fresh Air	Natural & Central Supply Air	4	via ensuite	Balanced	F7	43	41	100	5	300	A	80	Switch / Dimmer	Bed / Trolley 1.45m
3-C1.4-033	En-suite wheelchair-accessible WC, Shower & wash	1	Bathroom	28	20	Radiant Panels	Remote Sensor Adj.	No	None	Central Dirty Extract	0	minimum 10	Negative	None	43	41	200	n/a	None	A	80	Automatic Controls	Floor 0m
3-C1.4-034	Touchdown Base	1	staff base	28	18	Radiant Panels	Remote Sensor Adj.	Yes	Comfort Cooled Fresh Air	Central Supply Air	1 person at 10l/s/per	0	Positive	F7	43	n/a	200/300	n/a	1000	A	80	Switch / Dimmer	Desk 0.75 to 0.85m
3-C1.4-035	Linen Bay (1 Trolley)	1	Linen Bay	28	16	Adjacent Space Transfer	None	No	None	None	0	0	n/a	None	n/a	n/a	100 (KNX)	n/a	None	A	80	Automatic Controls	Floor 0m
3-C1.4-036	WC - Staff	1	Toilet	28	18	Adjacent Space Transfer Air	None	No	None	Central Dirty Extract	0	10	Negative	None	n/a	41	200	n/a	None	A	80	Automatic Controls	Floor 0m
3-C1.4-037	WC - Staff	1	Toilet	28	18	Adjacent Space Transfer Air	None	No	None	Central Dirty Extract	0	10	Negative	None	n/a	41	200	n/a	None	A	80	Automatic Controls	Floor 0m

Room No.	Room Name	Qty	Room Function	Temp (max)	Temp (min)	Heating Type	Heating Control	Cooling (present)	Cooling (type)	Ventilation (type)	Supply (ac/hr)	Extract (ac/hr)	Relative pressure	Min filtration	Surface temp	Water temp	Normal lux	Night lux	Local lux	Standby grade	Colour render	Control	Plane
3-C1.4-038	Treatment / Clean Utility	1	Treatment Room	25	18	Radiant Panels	Remote Sensor Adj.	Yes	Comfort Cooled Fresh Air	Central Supply Air	10	0	Positive	F7	43	41	500	n/a	1000	A	90	Switch	Bed / Trolley 1.45m
3-C1.4-039	Isolation Bedroom Entrance Lobby	1	Isolation Lobby	28	21	Warm Air - Reheat Battery	Local / BMS Adjustable	Yes	Comfort Cooled Fresh Air	Central Supply	61	0	Positive	H14	n/a	41	200	n/a	None	A	80	Automatic Controls	Floor 0m
3-C1.4-040	Single Isolation Bedroom (RHSC)	1	Isolation Bedroom	28	21	Adjacent Space Transfer Air	BMS Adjustable Sensor	Yes	Comfort Cooled Fresh Air	Supply via lobby	10	10 via the ensuite	Balanced	H14	n/a	41	100	5	300	A	80	Switch / Dimmer	Bed / Trolley 1.45m
3-C1.4-041	En-suite wheelchair-accessible WC, Shower & wash	1	Bathroom	28	20	Adjacent Space Transfer Air	None	No	None	Central Dirty Extract	0	44	Negative	None	n/a	41	200	n/a	None	A	80	Automatic Controls	Floor 0m
3-C1.4-042	En-suite wheelchair-accessible WC, Shower & wash	1	Bathroom	28	20	Adjacent Space Transfer Air	None	No	None	Central Dirty Extract	0	43	Negative	None	n/a	41	200	n/a	None	A	80	Automatic Controls	Floor 0m
3-C1.4-043	Single Isolation Bedroom (RHSC)	1	Isolation Bedroom	28	21	Adjacent Space Transfer Air	BMS Adjustable Sensor	Yes	Comfort Cooled Fresh Air	Supply via lobby	10	10 via the ensuite	Balanced	H14	n/a	41	100	5	300	A	80	Switch / Dimmer	Bed / Trolley 1.45m
3-C1.4-044	Isolation Bedroom Entrance Lobby	1	Isolation Lobby	28	21	Warm Air - Reheat Battery	Local / BMS Adjustable	Yes	Comfort Cooled Fresh Air	Central Supply	64	0	Positive	H14	n/a	41	200	n/a	None	A	80	Automatic Controls	Floor 0m
3-C1.4-045	Touchdown Base	1	Staff base	28	18	Radiant Panels	Remote Sensor Adj.	Yes	Comfort Cooled Fresh Air	Central Supply Air	1 person at 10l/s/per person (7ach)	0	Positive	F7	n/a	n/a	200/300	n/a	1000	A	80	Switch / Dimmer	Desk 0.75 to 0.85m
3-C1.4-046	Single Bedroom	1	Bedroom	28	18	Radiant Panels	Remote Sensor Adj.	Yes	Comfort Cooled Fresh Air	Natural & Central Supply Air	4	via ensuite	Balanced	F7	43	41	100	5	300	A	80	Switch / Dimmer	Bed / Trolley 1.45m
3-C1.4-047	En-suite wheelchair-accessible WC, Shower & wash	1	Bathroom	28	20	Radiant Panels	Remote Sensor Adj.	No	None	Central Dirty Extract	0	minimum 10	Negative	None	43	41	200	n/a	None	A	80	Automatic Controls	Floor 0m
3-C1.4-048	Isolation Bedroom Entrance Lobby	1	Isolation Lobby	28	21	Warm Air - Reheat Battery	Local / BMS Adjustable	Yes	Comfort Cooled Fresh Air	Central Supply	63	0	Positive	H14	n/a	41	200	n/a	None	A	80	Automatic Controls	Floor 0m
3-C1.4-049	Single Isolation Bedroom (RHSC)	1	Isolation Bedroom	28	21	Adjacent Space Transfer Air	BMS Adjustable Sensor	Yes	Comfort Cooled Fresh Air	Supply via lobby	10	10 via the ensuite	Balanced	H14	n/a	41	100	5	300	A	80	Switch / Dimmer	Bed / Trolley 1.45m
3-C1.4-050	En-suite wheelchair-accessible WC, Shower & wash	1	Bathroom	28	20	Adjacent Space Transfer Air	None	No	None	Central Dirty Extract	0	42	Negative	None	n/a	41	200	n/a	None	A	80	Automatic Controls	Floor 0m
3-C1.4-051	En-suite wheelchair-accessible WC, Shower & wash	1	Bathroom	28	20	Adjacent Space Transfer Air	None	No	None	Central Dirty Extract	0	41	Negative	None	n/a	41	200	n/a	None	A	80	Automatic Controls	Floor 0m
3-C1.4-052	Single Isolation Bedroom (RHSC)	1	Isolation Bedroom	28	21	Adjacent Space Transfer Air	BMS Adjustable Sensor	Yes	Comfort Cooled Fresh Air	Supply via lobby	10	10 via the ensuite	Balanced	H14	n/a	41	100	5	300	A	80	Switch / Dimmer	Bed / Trolley 1.45m
3-C1.4-053	Isolation Bedroom Entrance Lobby	1	Isolation Lobby	28	21	Warm Air - Reheat Battery	Local / BMS Adjustable	Yes	Comfort Cooled Fresh Air	Central Supply	61	0	Positive	H14	n/a	41	200	n/a	None	A	80	Automatic Controls	Floor 0m
3-C1.4-054	Resuscitation Trolley Bay	1	Circulation Equipment Storage Bays	28	16	Adjacent Space Transfer	None	No	None	None	0	0	n/a	None	n/a	n/a	200	n/a	None	A	80	Automatic Controls	Floor 0m
3-C1.4-055	Single Bedroom (RHSC)	1	Bedroom	28	18	Radiant Panels	Remote Sensor Adj.	Yes	Comfort Cooled Fresh Air	Natural & Central Supply Air	4	via ensuite	Balanced	F7	43	41	100	5	300	A	80	Switch / Dimmer	Bed / Trolley 1.45m
3-C1.4-056	En-suite wheelchair-accessible WC, Shower & wash	1	Bathroom	28	20	Adjacent Space Transfer Air	None	No	None	Central Dirty Extract	0	minimum 10	Negative	None	n/a	41	200	n/a	None	A	80	Automatic Controls	Floor 0m
3-C1.4-057	Single Bedroom	1	Bedroom	28	18	Radiant Panels	Remote Sensor Adj.	Yes	Comfort Cooled Fresh Air	Natural & Central Supply Air	4	via ensuite	Balanced	F7	43	41	100	5	300	A	80	Switch / Dimmer	Bed / Trolley 1.45m
3-C1.4-058	En-suite wheelchair-accessible WC, Shower & wash	1	Bathroom	28	20	Radiant Panels	Remote Sensor Adj.	No	None	Central Dirty Extract	0	minimum 10	Negative	None	43	41	200	n/a	None	A	80	Automatic Controls	Floor 0m
3-C1.4-059	Single Bedroom	1	Bedroom	28	18	Radiant Panels	Remote Sensor Adj.	Yes	Comfort Cooled Fresh Air	Natural & Central Supply Air	4	via ensuite	Balanced	F7	43	41	100	5	300	A	80	Switch / Dimmer	Bed / Trolley 1.45m
3-C1.4-060	En-suite wheelchair-accessible WC, Shower & wash	1	Bathroom	28	20	Adjacent Space Transfer Air	None	No	None	Central Dirty Extract	0	minimum 10	Negative	None	n/a	41	200	n/a	None	A	80	Automatic Controls	Floor 0m
3-C1.4-061	Multi Bed Room: day care, 4 beds & 2 chairs	1	Multi-bed Wards	28	18	Radiant Panels	Remote Sensor Adj.	Yes	Ceiling Cassette - Chilled Water	Natural and Central Supply Air	4	via ensuite	positive to ensuite	F7	43	41	100	5	300	A	80	switch / dimmer	Bed / Trolley 1.45m
3-C1.4-062	En-Suite Multi Bedroom	1	Bathroom	28	20	Radiant Panels	Remote Sensor Adj.	No	None	Central Dirty Extract	0	10	Negative	None	43	41	200	n/a	None	A	80	Automatic Controls	Floor 0m
3-C1.4-063	Play Room	1	Common room/staff room/lounge	28	18	Radiant Panels	Remote Sensor Adj.	Yes	Comfort Cooled Fresh Air	Central Supply and Extract	6	8	Negative	F7	43	41	300	n/a	None	A	80	Switch	Floor 0m
3-C1.4-064	Ward Kitchen	1	Ward Kitchen	28	18	Radiant Panels	Remote Sensor Adj.	No	None	Central General Extract	0	6	Negative	None	43	60	500	n/a	None	A	80	Switch	General working plane 1m
3-C1.4-065	Treatment Room	1	Treatment Room	25	18	Radiant Panels	Remote Sensor Adj.	Yes	Comfort Cooled Fresh Air	Central Supply Air	10	0	Positive	F7	43	41	500	n/a	1000	A	90	Switch	Bed / Trolley 1.45m
3-C1.4-066	Clean Utility	1	Clean Utility	28	18	Radiant Panels	Remote Sensor Adj.	Yes	Comfort Cooled Fresh Air	Central Supply Air	6	0	Positive	F7	43	41	150	n/a	None	A	80	Automatic Controls	General working plane 1m
3-C1.4-067	WC - Visitors	1	Toilet	28	18	Adjacent Space Transfer Air	None	No	None	Central Dirty Extract	0	10	Negative	None	43	41	200	n/a	None	A	80	Automatic Controls	Floor 0m
3-C1.4-068	Waiting Area	1	Waiting Room	28	18	Radiant Panels	Remote Sensor Adj.	Yes	Comfort Cooled Fresh Air	Central Supply and Extract	5	5	Balanced	F7	43	n/a	300	n/a	None	A	80	Automatic Controls	Floor 0m
3-C1.4-069	Reception / Staff Base	1	Reception	28	18	Adjacent Space Transfer Air	None	Yes	Comfort Cooled Fresh Air	Central Supply and Extract	3	3	Balanced	F7	n/a	n/a	300	n/a	None	A	80	Switch	Desk 0.75 to 0.85m
3-C1.4-071	Isolation Bedroom 5 Entrance Lobby	1	Isolation Lobby	28	21	Warm Air - Reheat Battery	Local / BMS Adjustable	Yes	Comfort Cooled Fresh Air	Central Supply	36	0	Positive	H14	n/a	41	200	n/a	None	A	80	Automatic Controls	Floor 0m
3-C1.4-072	Single Isolation Bedroom 5 (RHSC)	1	Isolation Bedroom	28	21	Adjacent Space Transfer Air	BMS Adjustable Sensor	Yes	Comfort Cooled Fresh Air	Supply via lobby	10	10 via the ensuite	Balanced	H14	n/a	41	100	5	300	A	80	Switch / Dimmer	Bed / Trolley 1.45m
3-C1.4-073	En-suite wheelchair-accessible WC, Shower & wash Isol 5	1	Bathroom	28	20	Adjacent Space Transfer Air	None	No	None	Central Dirty Extract	0	41	Negative	None	n/a	41	200	n/a	None	A	80	Automatic Controls	Floor 0m
3-C1.4-074	Single Bedroom (RHSC)	1	Bedroom	28	18	Radiant Panels	Remote Sensor Adj.	Yes	Comfort Cooled Fresh Air	Natural & Central Supply Air	4	via ensuite	Balanced	F7	43	41	100	5	300	A	80	Switch / Dimmer	Bed / Trolley 1.45m
3-C1.4-075	En-suite wheelchair-accessible WC, Shower & wash Room	1	Bathroom	28	20	Adjacent Space Transfer Air	None	No	None	Central Dirty Extract	0	minimum 10	Negative	None	n/a	41	200	n/a	None	A	80	Automatic Controls	Floor 0m
3-C1.4-076	Single Bedroom (RHSC)	1	Bedroom	28	18	Radiant Panels	Remote Sensor Adj.	Yes	Comfort Cooled Fresh Air	Natural & Central Supply Air	4	via ensuite	Balanced	F7	43	41	100	5	300	A	80	Switch / Dimmer	Bed / Trolley 1.45m
3-C1.4-077	En-suite wheelchair-accessible WC, Shower & wash Room	1	Bathroom	28	20	Adjacent Space Transfer Air	None	No	None	Central Dirty Extract	0	minimum 10	Negative	None	n/a	41	200	n/a	None	A	80	Automatic Controls	Floor 0m
3-C1.4-078	Single Bedroom (RHSC)	1	Bedroom	28	18	Radiant Panels	Remote Sensor Adj.	Yes	Comfort Cooled Fresh Air	Natural & Central Supply Air	4	via ensuite	Balanced	F7	43	41	100	5	300	A	80	Switch / Dimmer	Bed / Trolley 1.45m
3-C1.4-079	En-suite wheelchair-accessible WC, Shower & wash Room	1	Bathroom	28	20	Adjacent Space Transfer Air	None	No	None	Central Dirty Extract	0	minimum 10	Negative	None	43	41	200	n/a	None	A	80	Automatic Controls	Floor 0m
3-C1.4-080	Touchdown Base 4	1	staff base	28	18	Radiant Panels	Remote Sensor Adj.	Yes	Comfort Cooled Fresh Air	None	0	0	n/a	n/a	n/a	n/a	200/300	n/a	1000	A	80	Switch / Dimmer	Desk 0.75 to 0.85m
3-C1.4-081	Reception (1P)	1	Reception	28	18	Radiant Panels	Remote Sensor Adj.	Yes	Comfort Cooled Fresh Air	Central Supply Air	3	0	Positive	F7	43	n/a	300	n/a	None	A	80	Automatic Controls	Desk 0.75 to 0.85m
3-C1.4-083	Dirty Utility	1	Dirty utility	28	18	Adjacent Space Transfer Air	None	No	None	Central Dirty Extract	0	6	Negative	None	n/a	41	200	n/a	None	A	80	Automatic Controls	Floor 0m
3-C1.4-084	Multi Bed Day Room:day care	1	Multi-bed Wards	28	18	Radiant Panels	Remote Sensor Adj.	Yes	Comfort Cooled Fresh Air	Natural and Central Supply Air	4	via ensuite	positive to ensuite	F7	43	41	100	5	300	A	80	switch / dimmer	Bed / Trolley 1.45m
3-C1.4-085	En-Suite Multi Bedroom	1	Bathroom	28	20	Radiant Panels	Remote Sensor Adj.	No	None	Central Dirty Extract	0	10	Negative	None	43	41	200	n/a	None	A	80	Automatic Controls	Floor 0m
3-C1.4-086	Equipment Bay	1	Storage Area Equipment	28	16	Radiant Panels	Remote Sensor Adj.	No	None	Central General Extract	0	3	Negative	None	43	n/a	200	n/a	None	A	80	Automatic Controls	Floor 0m
3-C1.4-087	Consult Examination	1	Consulting Room	25	18	Radiant Panels	Remote Sensor Adj.	Yes	Ceiling Cassette - Chilled Water	Central Supply and Extract	3	3	Balanced	F7	43	41	300	n/a	1000	A	80	Switch	Bed / Trolley 1.45m
3-C1.4-088	Beverage Bay	1	Tea Making	28	18	Adjacent Space Transfer	None	No	None	None	0	0	n/a	None	n/a	41	100 KNX	n/a	None	A	80	switch	Floor 0m
3-C1.4-001	Corridor	1	Corridor	28	18	None	None	No	None	None	0	0	n/a	None	N/a	n/a	200	n/a	None	A	80	Automatic Controls	Floor 0m
3-C1.4-003	Corridor	1	Corridor	28	18	Radiant Panels	Remote Sensor Adj.	No	None	None	0	0	n/a	None	43	n/a	200	n/a	None	A	80	Automatic Controls	Floor 0m
3-C1.4-020	Corridor	1	Corridor	28	18	Radiant Panels	Remote Sensor Adj.	No	None	None	0	0	n/a	None	43	n/a	200	n/a	None	A	80	Automatic Controls	Floor 0m

Room No.	Room Name	Qty	Room Function	Temp (max)	Temp (min)	Heating Type	Heating Control	Cooling (present)	Cooling (type)	Ventilation (type)	Supply (ac/hr)	Extract (ac/hr)	Relative pressure	Min filtration	Surface temp	Water temp	Normal lux	Night lux	Local lux	Standby grade	Colour render	Control	Plane
3-C1.4-031	Corridor	1	Corridor	28	18	Radiant Panels	Remote Sensor Adj.	No	None	None	0	0	n/a	None	43	n/a	200	n/a	None	A	80	Automatic Controls	Floor 0m
3-C1.4-082	Corridor	1	Corridor	28	18	None	None	No	None	None	0	0	n/a	None	n/a	n/a	200	n/a	None	A	80	Automatic Controls	Floor 0m
3-C1.4-070	Switch Cupboard	1	Switch Cupboard	Not Controlled	Not Controlled	None	None	No	None	None	0	0	n/a	None	n/a	n/a	100	n/a	None	A	80	Automatic Controls	Floor 0m
3-C1.5-002	Store - back up clothing	1	Storage Area Equipment	28	16	Adjacent Space Transfer Air	None	No	None	Central General Extract	0	3	Negative	None	n/a	n/a	200	n/a	None	A	80	Automatic Controls	Floor 0m
3-C1.5-003	Family Sitting Room	1	Common room/staff room/lounge	28	18	Radiant Panels	Remote Sensor Adj.	Yes	Comfort Cooled Fresh Air	Central Supply and Extract	6	8	Negative	F7	43	n/a	300	n/a	None	A	80	Switch	Floor 0m
3-C1.5-004	Baby Infant / Feeding Room	1	Baby Feeding	28	18	Radiant Panels	Remote Sensor Adj.	No	None	Central Dirty Extract	0	10	Negative	None	43	41	100	n/a	None	A	80	Switch	Floor 0m
3-C1.5-005	Nappy Change	1	Nappy Change	28	18	Radiant Panels	Remote Sensor Adj.	No	None	Central Dirty Extract	0	10	Negative	None	43	41	100	n/a	None	A	80	Automatic Controls	Floor 0m
3-C1.5-006	Breast Pump Room	1	Baby Feeding	28	18	Radiant Panels	Remote Sensor Adj.	No	None	Central Dirty Extract	0	10	Negative	None	43	41	100	n/a	None	A	80	Switch	Floor 0m
3-C1.5-007	WC-Wheelchair Accessible	1	Toilet	28	18	Adjacent Space Transfer Air	None	No	None	Central Dirty Extract	0	10	Negative	None	n/a	41	200	n/a	None	A	80	Automatic Controls	Floor 0m
3-C1.5-008	WC-Wheelchair Accessible	1	Toilet	28	18	Adjacent Space Transfer Air	None	No	None	Central Dirty Extract	0	10	Negative	None	n/a	41	200	n/a	None	A	80	Automatic Controls	Floor 0m
3-C1.5-001	Corridor	1	Corridor	28	18	None	None	No	None	Central Supply Air	20	0	Positive	F7	43	n/a	200	n/a	None	A	80	Automatic Controls	Floor 0m
3-C1.6-001	Dining / Recreation Room	1	Common room/staff room/lounge	28	18	Radiant Panels	Remote Sensor Adj.	Yes	Comfort Cooled Fresh Air	Central Supply and Extract	6	8	Negative	F7	43	41	300	n/a	None	A	80	Switch	Floor 0m
3-C1.6-002	Quiet Room / Study	1	Cellular / Ward Offices	28	18	Radiant Panels	Remote Sensor Adj.	Yes	Comfort Cooled Fresh Air	Central Supply and Extract	4	3	Positive	F7	43	n/a	400	n/a	None	A	80	Switch	Desk 0.75 to 0.85m
3-C1.7-002	EEG Review Room	1	Cellular / Ward Offices	28	18	Radiant Panels	Remote Sensor Adj.	Yes	Ceiling Cassette - Chilled Water	Central Supply and Extract	4	3	Positive	F7	43	n/a	400	n/a	None	A	80	Switch	Desk 0.75 to 0.85m
3-C1.7-003	EEG Recording Room	1	Diagnostic room	25	18	Warm Air - Reheat Battery	BMS Adjustable Sensor	Yes	Ceiling Cassette - Chilled Water	Central Supply and Extract	8	8	Balanced	F7	43	41	300	n/a	1000	A	80	Switch / Dimmer	General working plane 1m
3-C1.7-004	EEG Recording Room	1	Diagnostic room	25	18	Warm Air - Reheat Battery	BMS Adjustable Sensor	Yes	Ceiling Cassette - Chilled Water	Central Supply and Extract	8	8	Balanced	F7	43	41	300	n/a	1000	A	80	Switch / Dimmer	General working plane 1m
3-C1.7-005	Evoked Potential Recording Room	1	Diagnostic room	25	18	Warm Air - Reheat Battery	BMS Adjustable Sensor	Yes	Ceiling Cassette - Chilled Water	Central Supply and Extract	8	8	Balanced	F7	43	41	300	n/a	1000	A	80	Switch / Dimmer	General working plane 1m
3-C1.7-001	Corridor	1	Corridor	28	18	Radiant Panels	Remote Sensor Adj.	No	None	None	0	0	n/a	none	43	n/a	200	n/a	None	A	80	Automatic Controls	Floor 0m
3-C1.8-002	Disposal Hold	1	Disposal Hold	28	16	Adjacent Space Transfer Air	None	No	None	Central Dirty Extract	0	6	Negative	None	n/a	n/a	200	n/a	None	A	80	Automatic Controls	Floor 0m
3-C1.8-003	Dirty Utility	1	Dirty utility	28	18	Adjacent Space Transfer Air	None	No	None	Central Dirty Extract	0	6	Negative	None	n/a	41	200	n/a	None	A	80	Automatic Controls	Floor 0m
3-C1.8-005	Single Bedroom (RHSC)	1	Bedroom	28	18	Radiant Panels	Remote Sensor Adj.	Yes	Comfort Cooled Fresh Air	Natural & Central Supply Air	4	via ensuite	Balanced	F7	43	41	100	5	300	A	80	Switch / Dimmer	Bed / Trolley 1.45m
3-C1.8-006	En-suite wheelchair-accessible WC, Shower & wash	1	Bathroom	28	20	Radiant Panels	Remote Sensor Adj.	No	None	Central Dirty Extract	0	minimum 10	Negative	None	43	41	200	n/a	None	A	80	Automatic Controls	Floor 0m
3-C1.8-007	Staff WC	1	Toilet	28	18	Adjacent Space Transfer Air	None	No	None	Central Dirty Extract	0	10	Negative	None	n/a	41	200	n/a	None	A	80	Automatic Controls	Floor 0m
3-C1.8-008	WC - Visitors	1	Toilet	28	18	Adjacent Space Transfer Air	None	No	None	Central Dirty Extract	0	10	Negative	None	n/a	41	200	n/a	None	A	80	Automatic Controls	Floor 0m
3-C1.8-009	Dining / Play Room	1	Eating/Drinking	28	18	Radiant Panels	Remote Sensor Adj.	Yes	Comfort Cooled Fresh Air	Central Supply and Extract	5 people at 10 l/s per person (4ach)	5 people at 10 l/s per person (4ach)	Balanced	F7	43	41	300	n/a	None	A	80	Switch	Floor 0m
3-C1.8-010	Ward Kitchen	1	Ward Kitchen	28	18	Radiant Panels	Remote Sensor Adj.	No	None	Central General Extract	0	6	Negative	None	43	60	500	n/a	None	A	80	Switch	General working plane 1m
3-C1.8-011	Reception Desk/Staff Base	1	Reception	28	18	Radiant Panels	Remote Sensor Adj.	Yes	Wall Mounted Unit	Central Supply Air	3	0	Positive	F7	43	n/a	300	n/a	None	A	80	Switch	Desk 0.75 to 0.85m
3-C1.8-012	DSR	1	DSR	28	18	Adjacent Space Transfer Air	None	No	None	Central Dirty Extract	0	6	Negative	None	n/a	60	100	n/a	None	A	80	Automatic Controls	Floor 0m
3-C1.8-013	Store - General	1	Storage Area Equipment	28	16	Adjacent Space Transfer Air	None	No	None	Central General Extract	0	3	Negative	None	n/a	n/a	200	n/a	None	A	80	Automatic Controls	Floor 0m
3-C1.8-014	Clean Utility	1	Clean Utility	28	18	Radiant Panels	Remote Sensor Adj.	Yes	Comfort Cooled Fresh Air	Central Supply Air	6	0	Positive	F7	43	41	150	n/a	None	A	80	Automatic Controls	General working plane 1m
3-C1.8-015	Treatment Room	1	Treatment Room	25	18	Radiant Panels	Remote Sensor Adj.	Yes	Comfort Cooled Fresh Air	Central Supply Air	10	0	Positive	F7	43	41	500	n/a	1000	A	90	Switch	Bed / Trolley 1.45m
3-C1.8-016	4 Bed Room	1	Multi-bed Wards	28	18	Radiant Panels	Remote Sensor Adj.	Yes	Comfort Cooled Fresh Air	Natural and Central Supply Air	4	via ensuite	positive to ensuite	F7	43	41	100	5	300	A	80	switch / dimmer	Bed / Trolley 1.45m
3-C1.8-017	En-suite Shower / WC / WHB	1	Bathroom	28	20	Adjacent Space Transfer Air	None	No	None	Central Dirty Extract	0	10	Negative	None	n/a	41	200	n/a	None	A	80	Automatic Controls	Floor 0m
3-C1.8-018	WC Wheelchair Accessible	1	Toilet	28	18	Radiant Panels	Remote Sensor Adj.	No	None	Central Dirty Extract	0	10	Negative	None	43	41	200	n/a	None	A	80	Automatic Controls	Floor 0m
3-C1.8-019	Touchdown Base	1	Staff base	28	18	Radiant Panels	Remote Sensor Adj.	Yes	Comfort Cooled Fresh Air	None	0	0	n/a	n/a	n/a	n/a	200/300	n/a	1000	A	80	Switch / Dimmer	Desk 0.75 to 0.85m
3-C1.8-020	Resuscitation Trolley Bay	1	Circulation Equipment Storage Bays	28	16	Adjacent Space Transfer	None	No	None	None	0	0	n/a	None	n/a	n/a	200	n/a	None	A	80	Automatic Controls	Floor 0m
3-C1.8-021	Single Bedroom (RHSC)	1	Bedroom	28	18	Radiant Panels	Remote Sensor Adj.	Yes	Comfort Cooled Fresh Air	Natural & Central Supply Air	4	via ensuite	Balanced	F7	43	41	100	5	300	A	80	Switch / Dimmer	Bed / Trolley 1.45m
3-C1.8-022	En-suite Shower / WC / WHB	1	Bathroom	28	20	Adjacent Space Transfer Air	None	No	None	Central Dirty Extract	0	minimum 10	Negative	None	n/a	41	200	n/a	None	A	80	Automatic Controls	Floor 0m
3-C1.8-023	Single Bedroom	1	Bedroom	28	18	Radiant Panels	Remote Sensor Adj.	Yes	Comfort Cooled Fresh Air	Natural & Central Supply Air	4	via ensuite	Balanced	F7	43	41	100	5	300	A	80	Switch / Dimmer	Bed / Trolley 1.45m
3-C1.8-024	En-suite Shower / WC / WHB	1	Bathroom	28	20	Radiant Panels	Remote Sensor Adj.	No	None	Central Dirty Extract	0	minimum 10	Negative	None	43	41	200	n/a	None	A	80	Automatic Controls	Floor 0m
3-C1.8-025	Single Bedroom	1	Bedroom	28	18	Radiant Panels	Remote Sensor Adj.	Yes	Ceiling Cassette - Chilled Water	Natural & Central Supply Air	4	via ensuite	Balanced	F7	43	41	100	5	300	A	80	Switch / Dimmer	Bed / Trolley 1.45m
3-C1.8-026	En-suite Shower / WC / WHB	1	Bathroom	28	20	Radiant Panels	Remote Sensor Adj.	No	None	Central Dirty Extract	0	minimum 10	Negative	None	43	41	200	n/a	None	A	80	Automatic Controls	Floor 0m
3-C1.8-027	4 Bed Room	1	Multi-bed Wards	28	18	Radiant Panels	Remote Sensor Adj.	Yes	Comfort Cooled Fresh Air	Natural and Central Supply Air	4	via ensuite	positive to ensuite	F7	43	41	100	5	300	A	80	switch / dimmer	Bed / Trolley 1.45m
3-C1.8-028	WC Wheelchair Accessible	1	Toilet	28	18	Adjacent Space Transfer Air	None	No	None	Central Dirty Extract	0	10	Negative	None	n/a	41	200	n/a	None	A	80	Automatic Controls	Floor 0m
3-C1.8-029	En-suite Shower / WC / WHB	1	Bathroom	28	20	Radiant Panels	Remote Sensor Adj.	No	None	Central Dirty Extract	0	minimum 10	Negative	None	43	41	200	n/a	None	A	80	Automatic Controls	Floor 0m
3-C1.8-030	Single Bedroom	1	Bedroom	28	18	Radiant Panels	Remote Sensor Adj.	Yes	Ceiling Cassette - Chilled Water	Natural & Central Supply Air	4	via ensuite	Balanced	F7	43	41	100	5	300	A	80	Switch / Dimmer	Bed / Trolley 1.45m
3-C1.8-031	En-suite Shower / WC / WHB	1	Bathroom	28	20	Adjacent Space Transfer Air	None	No	None	Central Dirty Extract	0	minimum 10	Negative	None	n/a	41	200	n/a	None	A	80	Automatic Controls	Floor 0m
3-C1.8-032	Single Bedroom	1	Bedroom	28	18	Radiant Panels	Remote Sensor Adj.	Yes	Ceiling Cassette - Chilled Water	Natural & Central Supply Air	4	via ensuite	Balanced	F7	43	41	100	5	300	A	80	Switch / Dimmer	Bed / Trolley 1.45m
3-C1.8-033	En-suite wheelchair-accessible WC, Shower & wash	1	Bathroom	28	20	Radiant Panels	Remote Sensor Adj.	No	None	Central Dirty Extract	0	minimum 10	Negative	None	43	41	200	n/a	None	A	80	Automatic Controls	Floor 0m
3-C1.8-034	Linen Bay (1 Trolley)	1	Linen Bay	28	16	Adjacent Space Transfer	None	No	None	None	0	0	n/a	None	n/a	n/a	100 (KNX)	n/a	None	A	80	Automatic Controls	Floor 0m
3-C1.8-035	Patient's Assisted Bathroom	1	Bathroom	28	20	Radiant Panels	Remote Sensor Adj.	No	None	Central Dirty Extract	0	10	Negative	None	43	41	200	n/a	None	A	80	Switch	Floor 0m
3-C1.8-036	Store - Equipment	1	Storage Area Equipment	28	16	Adjacent Space Transfer Air	None	No	None	Central General Extract	0	3	Negative	None	n/a	n/a	200	n/a	None	A	80	Automatic Controls	Floor 0m

Room No.	Room Name	Qty	Room Function	Temp (max)	Temp (min)	Heating Type	Heating Control	Cooling (present)	Cooling (type)	Ventilation (type)	Supply (ac/hr)	Extract (ac/hr)	Relative pressure	Min filtration	Surface temp	Water temp	Normal lux	Night lux	Local lux	Standby grade	Colour render	Control	Plane
3-C1.8-037	Ward Management Office	1	Cellular / Ward Offices	28	18	Radiant Panels	Remote Sensor Adj.	Yes	Wall Mounted Unit	Central Supply and Extract	4	3	Positive	F7	43	n/a	400	n/a	None	A	80	Switch	Desk 0.75 to 0.85m
3-C1.8-040	Touchdown Base	1	staff base	28	18	Radiant Panels	Remote Sensor Adj.	Yes	Comfort Cooled Fresh Air	None	0	0	n/a	n/a	43	n/a	200/300	n/a	1000	A	80	Switch / Dimmer	Desk 0.75 to 0.85m
3-C1.8-001	Corridor	1	Corridor	28	18	Radiant Panels	Remote Sensor Adj.	No	None	None	0	0	n/a	None	43	n/a	200	n/a	None	A	80	Automatic Controls	Floor 0m
3-C1.8-004	Corridor	1	Corridor	28	18	Radiant Panels	Remote Sensor Adj.	No	None	None	0	0	n/a	None	43	n/a	200	n/a	None	A	80	Automatic Controls	Floor 0m
3-C1.8-038	Switch Cupboard	1	Switch Cupboard	Not Controlled	Not Controlled	None	None	No	None	None	0	0	n/a	None	n/a	n/a	100	n/a	None	A	80	Automatic Controls	Floor 0m
3-C2-003	DSR	1	DSR	28	18	Adjacent Space Transfer Air	None	No	None	Central Dirty Extract	0	6	Negative	None	n/a	60	100	n/a	None	A	80	Automatic Controls	Floor 0m
3-C2-004	Seminar Room	1	Meeting Room	25	18	Radiant Panels	Remote Sensor Adj.	Yes	Ceiling Cassette - Chilled Water	Central Supply and Extract	18 people at 10 l/s per person (9ach)	18 people at 10 l/s per person (9ach)	Balanced	F7	43	n/a	300	n/a	None	A	80	Switch	Desk 0.75 to 0.85m
3-C2-005	Staff Room	1	Common room/staff room/lounge	28	18	Radiant Panels	Remote Sensor Adj.	Yes	Comfort Cooled Fresh Air	Central Supply and Extract	6	8	Negative	F7	43	41	300	n/a	None	A	80	Switch	Floor 0m
3-C2-006	Parent Shower Room	1	Bathroom	28	20	Radiant Panels	Remote Sensor Adj.	No	None	Central Dirty Extract	0	10	Negative	None	43	41	200	n/a	None	A	80	Automatic Controls	Floor 0m
3-C2-001	Corridor	1	Corridor	28	18	None	None	No	None	None	0	0	n/a	None	n/a	n/a	200	n/a	None	A	80	Automatic Controls	Floor 0m
3-C3-002	Food Prep Area	1	Ward Kitchen	28	18	Radiant Panels	Remote Sensor Adj.	No	None	Central General Extract	0	6	Negative	None	43	60	500	n/a	None	A	80	Switch	General working plane 1m
3-C3-003	Wash Room	1	Bathroom	28	20	Adjacent Space Transfer Air	None	No	None	Central Dirty Extract	0	10	Negative	None	n/a	41	200	n/a	None	A	80	Automatic Controls	Floor 0m
3-C3-004	Office Ante Room	1	Cellular / Ward Offices	28	18	Radiant Panels	Remote Sensor Adj.	Yes	Comfort Cooled Fresh Air	Central Supply and Extract	4	4	Balanced	F7	43	n/a	400	n/a	None	A	80	Switch	Desk 0.75 to 0.85m
3-C3-005	Store - Feeds	1	Storage Area Equipment	28	16	Adjacent Space Transfer Air	None	No	None	Central General Extract	0	3	Negative	None	n/a	n/a	200	n/a	None	A	80	Automatic Controls	Floor 0m
3-C3-001	Corridor	1	Corridor	28	18	None	None	No	None	None	0	0	n/a	None	n/a	n/a	200	n/a	None	A	80	Automatic Controls	Floor 0m
3-C4-002	Store	1	Storage Area Equipment	28	16	Radiant Panels	Remote Sensor Adj.	No	None	Central General Extract	0	3	Negative	None	43	n/a	200	n/a	None	A	80	Automatic Controls	Floor 0m
3-C4-003	En-suite wheelchair-accessible WC, Shower & wash	1	Bathroom	28	20	Adjacent Space Transfer Air	None	No	None	Central Dirty Extract	0	10	Negative	None	n/a	41	200	n/a	None	A	80	Automatic Controls	Floor 0m
3-C4-005	Sleep Room	1	Bedroom	28	18	Radiant Panels	Remote Sensor Adj.	Yes	Comfort Cooled Fresh Air	Natural & Central Supply Air	4	via ensuite	Balanced	F7	43	41	100	5	300	A	80	Switch / Dimmer	Bed / Trolley 1.45m
3-C4-006	Parents Room	1	Bedroom	28	18	Radiant Panels	Remote Sensor Adj.	Yes	Comfort Cooled Fresh Air	Natural & Central Supply Air	4	None	positive	F7	43	n/a	100	n/a	None	A	80	Switch / Dimmer	Floor 0m
3-C4-007	Control Room	1	Cellular / Ward Offices	28	18	Radiant Panels	Remote Sensor Adj.	No	None	Central General Extract	0	2	Negative	None	43	n/a	400	n/a	None	A	80	Switch	Desk 0.75 to 0.85m
3-C4-008	Sleep Room	1	Bedroom	28	18	Radiant Panels	Remote Sensor Adj.	Yes	Comfort Cooled Fresh Air	Natural & Central Supply Air	4	via ensuite	Balanced	F7	43	41	100	5	300	A	80	Switch / Dimmer	Bed / Trolley 1.45m
3-C4-009	Parents Room	1	Bedroom	28	18	Radiant Panels	Remote Sensor Adj.	Yes	Comfort Cooled Fresh Air	Central Supply Air	4	None	positive	F7	43	n/a	100	n/a	None	A	80	Switch / Dimmer	Floor 0m
3-C4-010	En-suite wheelchair-accessible WC, Shower & wash	1	Bathroom	28	20	Adjacent Space Transfer Air	None	No	None	Central Dirty Extract	0	10	Negative	None	n/a	41	200	n/a	None	A	80	Automatic Controls	Floor 0m
3-C4-001	Corridor	1	Corridor	28	18	Radiant Panels	Remote Sensor Adj.	No	None	None	0	0	n/a	None	43	n/a	200	n/a	None	A	80	Automatic Controls	Floor 0m
3-C4-001A	Corridor	1	Corridor	28	18	None	None	No	None	None	0	0	n/a	None	n/a	n/a	200	n/a	None	A	80	Automatic Controls	Floor 0m
3-C4-001B	Corridor	1	Corridor	28	18	None	None	No	None	None	0	0	n/a	None	n/a	n/a	200	n/a	None	A	80	Automatic Controls	Floor 0m
4-C5-002	WC - Wheelchair accessible	1	Toilet	28	18	Adjacent Space Transfer Air	None	No	None	Central Dirty Extract	0	10	Negative	None	n/a	41	200	n/a	None	A	80	Automatic Controls	Floor 0m
4-C5-003	Store	1	Storage Area Equipment	28	16	Adjacent Space Transfer Air	None	No	None	Central General Extract	0	3	Negative	None	n/a	n/a	200	n/a	None	A	80	Automatic Controls	Floor 0m
4-C5-004	Primary Classroom	1	Classroom	28	18	Radiant Panels	Remote Sensor Adj.	Yes	Ceiling Cassette - Chilled Water	Central Supply and Extract	7 people at 10 l/s per person (5ach)	7 people at 10 l/s per person (5ach)	Balanced	F7	43	41	300	n/a	None	A	80	Switch	Desk 0.75 to 0.85m
4-C5-005	Upper Primary Classroom	1	Classroom	28	18	Radiant Panels	Remote Sensor Adj.	Yes	Ceiling Cassette - Chilled Water	Central Supply and Extract	7 people at 10 l/s per person (5ach)	7 people at 10 l/s per person (5ach)	Balanced	F7	43	41	300	n/a	None	A	80	Switch	Desk 0.75 to 0.85m
4-C5-006	Secondary Classroom	1	Classroom	28	18	Radiant Panels	Remote Sensor Adj.	Yes	Ceiling Cassette - Chilled Water	Central Supply and Extract	11 people at 10 l/s per person (8ach)	11 people at 10 l/s per person (8ach)	Balanced	F7	43	41	300	n/a	None	A	80	Switch	Desk 0.75 to 0.85m
4-C5-007	Administration Area	1	Cellular / Ward Offices	28	18	Radiant Panels	Remote Sensor Adj.	Yes	Comfort Cooled Fresh Air	Central Supply and Extract	4	3	Positive	F7	43	n/a	400	n/a	None	A	80	Switch	Desk 0.75 to 0.85m
4-C5-008	Resource Storage	1	Storage Area Equipment	28	16	Adjacent Space Transfer Air	None	No	None	Central General Extract	0	3	Negative	None	n/a	n/a	200	n/a	None	A	80	Automatic Controls	Floor 0m
4-C5-009	WC Ambulant	1	Toilet	28	18	Adjacent Space Transfer Air	None	No	None	Central Dirty Extract	0	10	Negative	None	n/a	41	200	n/a	None	A	80	Automatic Controls	Floor 0m
4-C5-001	Corridor	1	Corridor	28	18	None	None	No	None	None	0	0	n/a	None	n/a	n/a	200	n/a	None	A	80	Automatic Controls	Floor 0m
1-D1-001	DSR	1	DSR	28	18	Adjacent Space Transfer Air	None	No	None	Central Dirty Extract	0	6	Negative	None	n/a	60	100	n/a	None	A	80	Automatic Controls	Floor 0m
1-D1-002	Consult/Examination	1	Consulting Room	25	18	Radiant Panels	Remote Sensor Adj.	Yes	Ceiling Cassette - Chilled Water	Central Supply and Extract	3	3	Balanced	F7	43	41	300	n/a	1000	A	80	Switch	Bed / Trolley 1.45m
1-D1-003	Treatment Room (with prep area)	1	Treatment Room	25	18	Radiant Panels	Remote Sensor Adj.	Yes	Comfort Cooled Fresh Air	Central Supply Air	10	0	Positive	F7	43	41	500	n/a	1000	A	90	Switch	Bed / Trolley 1.45m
1-D1-004	Linen Bay	1	Linen Bay	28	16	Adjacent Space Transfer	None	No	None	None	0	0	n/a	None	n/a	n/a	100 (KNX)	n/a	None	A	80	Automatic Controls	Floor 0m
1-D1-005	Consult/Examination	1	Consulting Room	25	18	Radiant Panels	Remote Sensor Adj.	Yes	Ceiling Cassette - Chilled Water	Central Supply and Extract	3	3	Balanced	F7	43	41	300	n/a	1000	A	80	Switch	Bed / Trolley 1.45m
1-D1-008	Treatment Room (with prep area)	1	Treatment Room	25	18	Radiant Panels	Remote Sensor Adj.	Yes	Ceiling Cassette - Chilled Water	Central Supply Air	10	0	Positive	F7	43	41	500	n/a	1000	A	90	Switch	Bed / Trolley 1.45m
1-D1-009	Resuscitation Trolley Bay	1	Resus Trolley bay	28	18	Adjacent Space Transfer	None	No	None	None	0	0	n/a	None	n/a	n/a	200	n/a	None	A	80	Automatic Controls	Bed / Trolley 1.45m
1-D1-010	Dirty Utility	1	Dirty utility	28	18	Adjacent Space Transfer Air	None	No	None	Central Dirty Extract	0	6	Negative	None	n/a	41	200	n/a	None	A	80	Automatic Controls	Floor 0m
1-D1-011	WC wheelchair accessible	1	Toilet	28	18	Adjacent Space Transfer Air	None	No	None	Central Dirty Extract	0	10	Negative	None	n/a	41	200	n/a	None	A	80	Automatic Controls	Floor 0m
1-D1-012	Shower Room	1	Bathroom	28	20	Radiant Panels	Remote Sensor Adj.	No	None	Central Dirty Extract	0	10	Negative	None	43	41	200	n/a	None	A	80	Automatic Controls	Floor 0m
1-D1-013	Clean Utility	1	Clean Utility	28	18	Radiant Panels	Remote Sensor Adj.	Yes	Comfort Cooled Fresh Air	Central Supply Air	6	0	Positive	F7	43	41	150	n/a	None	A	80	Automatic Controls	General working plane 1m
1-D1-014	Consult/Examination	1	Consulting Room	25	18	Radiant Panels	Remote Sensor Adj.	Yes	Ceiling Cassette - Chilled Water	Central Supply and Extract	3	3	Balanced	F7	43	41	300	n/a	1000	A	80	Switch	Bed / Trolley 1.45m
1-D1-015	Play Therapy (inc messy play) Room	1	Common room/staff room/lounge	28	18	Radiant Panels	Remote Sensor Adj.	Yes	Comfort Cooled Fresh Air	Central Supply and Extract	6	8	Negative	F7	43	41	300	n/a	None	A	80	Switch	Floor 0m
1-D1-016	Consult/Multi-Disciplinary	1	Consulting Room	25	18	Radiant Panels	Remote Sensor Adj.	Yes	Ceiling Cassette - Chilled Water	Central Supply and Extract	6	4	Positive	F7	43	41	300	n/a	1000	A	80	Switch	Bed / Trolley 1.45m
1-D1-017	Consult/Examination	1	Consulting Room	25	18	Radiant Panels	Remote Sensor Adj.	Yes	Ceiling Cassette - Chilled Water	Central Supply and Extract	3	3	Balanced	F7	43	41	300	n/a	1000	A	80	Switch	Bed / Trolley 1.45m

Room No.	Room Name	Qty	Room Function	Temp (max)	Temp (min)	Heating Type	Heating Control	Cooling (present)	Cooling (type)	Ventilation (type)	Supply (ac/hr)	Extract (ac/hr)	Relative pressure	Min filtration	Surface temp	Water temp	Normal lux	Night lux	Local lux	Standby grade	Colour render	Control	Plane
1-D1-018	Consult/Examination (Ophthalmology)	1	Consulting Room	25	18	Radiant Panels	Remote Sensor Adj.	Yes	Ceiling Cassette - Chilled Water	Central Supply and Extract	3	3	Balanced	F7	43	41	300	n/a	1000	A	80	Switch	Bed / Trolley 1.45m
1-D1-019	Consult/Examination (ENT)	1	Consulting Room	25	18	Radiant Panels	Remote Sensor Adj.	Yes	Ceiling Cassette - Chilled Water	Central Supply and Extract	3	3	Balanced	F7	43	41	300	n/a	1000	A	80	Switch	Bed / Trolley 1.45m
1-D1-020	Consult/Examination (Cleft)	1	Consulting Room	25	18	Radiant Panels	Remote Sensor Adj.	Yes	Ceiling Cassette - Chilled Water	Central Supply and Extract	3	3	Balanced	F7	43	41	300	n/a	1000	A	80	Switch	Bed / Trolley 1.45m
1-D1-021	Consult/Examination (Cleft)	1	Consulting Room	25	18	Radiant Panels	Remote Sensor Adj.	Yes	Ceiling Cassette - Chilled Water	Central Supply and Extract	3	3	Balanced	F7	43	41	300	n/a	1000	A	80	Switch	Bed / Trolley 1.45m
1-D1-022	Consult/Examination (ENT)	1	Consulting Room	25	18	Radiant Panels	Remote Sensor Adj.	Yes	Ceiling Cassette - Chilled Water	Central Supply and Extract	3	3	Balanced	F7	43	41	300	n/a	1000	A	80	Switch	Bed / Trolley 1.45m
1-D1-023	Consult/Examination (ENT)	1	Consulting Room	25	18	Radiant Panels	Remote Sensor Adj.	Yes	Ceiling Cassette - Chilled Water	Central Supply and Extract	3	3	Balanced	F7	43	41	300	n/a	1000	A	80	Switch	Bed / Trolley 1.45m
1-D1-025	Physical Measurement	1	Consulting Room	25	18	Radiant Panels	Remote Sensor Adj.	No	None	None	0	0	n/a	None	43	41	300	n/a	1000	A	80	Switch	Bed / Trolley 1.45m
1-D1-026	Infant Measuring Room	1	Consulting Room	25	18	Radiant Panels	Remote Sensor Adj.	Yes	Ceiling Cassette - Chilled Water	Central Supply and Extract	2 people at 10 l/s per person (4ach)	2 people at 10 l/s per person (4ach)	Balanced	F7	43	41	300	n/a	1000	A	80	Switch	Bed / Trolley 1.45m
1-D1-027	Sub Waiting Area (incl supervised play) with Nurse Base	1	Waiting Room	28	18	Underfloor Heating	BMS Adjustable Sensor	Yes	Comfort Cooled Fresh Air	Central Supply and Extract	5	5	Balanced	F7	43	n/a	300	n/a	None	A	80	Switch	Floor 0m
1-D1-028	Sub Waiting Area	1	Waiting Room	28	18	Underfloor Heating	BMS Adjustable Sensor	Yes	Comfort Cooled Fresh Air	Central Supply and Extract	5	5	Balanced	F7	43	n/a	300	n/a	None	A	80	Switch	Floor 0m
1-D1-029	Baby Infant / Feeding Room	1	Baby Feeding	28	18	Radiant Panels	Remote Sensor Adj.	No	None	Dirty Extract	0	10	Negative	None	43	41	100	n/a	None	A	80	Automatic Controls	Floor 0m
1-D1-030	Nappy Change	1	Nappy Change	28	18	Radiant Panels	Remote Sensor Adj.	No	None	Central Dirty Extract	0	10	Negative	None	43	41	100	n/a	None	A	80	Automatic Controls	Floor 0m
1-D1-031	Equipment / General Store	1	Storage Area Equipment	28	16	Radiant Panels	Remote Sensor Adj.	No	None	Central General Extract	0	3	Negative	None	43	n/a	200	n/a	None	A	80	Automatic Controls	Floor 0m
1-D1-032	WC wheelchair accessible	1	Toilet	28	18	Radiant Panels	Remote Sensor Adj.	No	None	Central Dirty Extract	0	10	Negative	None	43	41	200	n/a	None	A	80	Automatic Controls	Floor 0m
1-D1-033	Phlebotomy Room	1	Consulting Room	25	18	Radiant Panels	Remote Sensor Adj.	Yes	Ceiling Cassette - Chilled Water	Central Supply and Extract	2 people at 10 l/s per person (4ach)	2 people at 10 l/s per person (4ach)	Balanced	F7	43	41	300	n/a	1000	A	80	Switch	Bed / Trolley 1.45m
1-D1-034	Mobile Hoist Bay	1	Circulation Equipment Storage Bays	28	16	Adjacent Space Transfer	None	No	None	None	0	0	n/a	None	n/a	n/a	200	n/a	None	A	80	Automatic Controls	Floor 0m
1-D1-035	Disposal Hold	1	Disposal Hold	28	16	Radiant Panels	Remote Sensor Adj.	No	None	Central Dirty Extract	0	6	Negative	None	43	n/a	200	n/a	None	A	80	Automatic Controls	Floor 0m
1-D1-036	Physical Measurement	1	Consulting Room	25	18	Radiant Panels	Remote Sensor Adj.	No	None	None	0	0	n/a	None	43	41	300	n/a	1000	A	80	Switch	Bed / Trolley 1.45m
1-D1-037	Reception	1	Reception	28	18	Underfloor Heating	BMS Adjustable Sensor	Yes	Comfort Cooled Fresh Air	Central Supply and Extract	1 people at 10 l/s per person (4ach)	1 people at 10 l/s per person (4ach)	Balanced	F7	43	n/a	300	n/a	None	A	80	Automatic Controls	Desk 0.75 to 0.85m
1-D1-038	Staff WC	1	Toilet	28	18	Adjacent Space Transfer Air	None	No	None	Central Dirty Extract	0	10	Negative	None	n/a	41	200	n/a	None	A	80	Automatic Controls	Floor 0m
G-D1-001	Nappy Change	1	Nappy Change	28	18	Radiant Panels	Remote Sensor Adj.	No	None	Central Dirty Extract	0	10	Negative	None	43	41	100	n/a	None	A	80	Automatic Controls	Floor 0m
G-D1-002	Baby Infant / Feeding Room	1	Baby Feeding	28	18	Radiant Panels	Remote Sensor Adj.	No	None	Dirty Extract	0	10	Negative	None	43	41	100	n/a	None	A	80	Automatic Controls	Floor 0m
G-D1-003	WC wheelchair accessible	1	Toilet	28	18	Adjacent Space Transfer Air	None	No	None	Central Dirty Extract	0	10	Negative	None	n/a	41	200	n/a	None	A	80	Automatic Controls	Floor 0m
G-D1-004	Staff WC	1	Toilet	28	18	Adjacent Space Transfer Air	None	No	None	Central Dirty Extract	0	10	Negative	None	n/a	41	200	n/a	None	A	80	Automatic Controls	Floor 0m
G-D1-005	Store Room	1	Storage Area Equipment	28	16	Adjacent Space Transfer Air	None	No	None	Central General Extract	0	3	Negative	None	n/a	n/a	200	n/a	None	A	80	Automatic Controls	Floor 0m
G-D1-006	Disposal Hold	1	Disposal Hold	28	16	Radiant Panels	Remote Sensor Adj.	No	None	Central Dirty Extract	0	6	Negative	None	43	n/a	200	n/a	None	A	80	Automatic Controls	Floor 0m
G-D1-007	DSR	1	DSR	28	18	Adjacent Space Transfer Air	None	No	None	Central Dirty Extract	0	6	Negative	None	n/a	60	100	n/a	None	A	80	Automatic Controls	Floor 0m
G-D1-008	Plaster Suite (3 bays)	1	Plaster Suite (3 bays)	25	18	Radiant Panels	Remote Sensor Adj.	Yes	Comfort Cooled Fresh Air	Central Supply and Extract	7	7	Balanced	F7	43	41	300	n/a	1000	A	80	Switch	Bed / Trolley 1.45m
G-D1-009	Store: Plaster	1	Storage Area Equipment	28	16	Adjacent Space Transfer Air	None	No	None	Central General Extract	0	3	Negative	None	n/a	n/a	200	n/a	None	A	80	Automatic Controls	Floor 0m
G-D1-010	Orthotics Workshop	1	Small Workshop	28	18	Radiant Panels	Remote Sensor Adj.	Yes	Ceiling Cassette - Chilled Water	Central Supply and Extract	4	6	Negative	F7	43	41	300	n/a	None	A	80	Switch	Desk 0.75 to 0.85m
G-D1-011	Consult/Examination	1	Consulting Room	25	18	Radiant Panels	Remote Sensor Adj.	Yes	Ceiling Cassette - Chilled Water	Central Supply and Extract	3	3	Balanced	F7	43	41	300	n/a	1000	A	80	Switch	Bed / Trolley 1.45m
G-D1-012	Consult/Examination	1	Consulting Room	25	18	Radiant Panels	Remote Sensor Adj.	Yes	Ceiling Cassette - Chilled Water	Central Supply and Extract	3	3	Balanced	F7	43	41	300	n/a	1000	A	80	Switch	Bed / Trolley 1.45m
G-D1-013	Consult/Examination	1	Consulting Room	25	18	Radiant Panels	Remote Sensor Adj.	Yes	Ceiling Cassette - Chilled Water	Central Supply and Extract	3	3	Balanced	F7	43	41	300	n/a	1000	A	80	Switch	Bed / Trolley 1.45m
G-D1-014	Consult/Examination	1	Consulting Room	25	18	Radiant Panels	Remote Sensor Adj.	Yes	Ceiling Cassette - Chilled Water	Central Supply and Extract	3	3	Balanced	F7	43	41	300	n/a	1000	A	80	Switch	Bed / Trolley 1.45m
G-D1-015	Physical Measurement	1	Consulting Room	25	18	Radiant Panels	Remote Sensor Adj.	No	None	None	0	0	n/a	None	43	41	300	n/a	1000	A	80	Switch	Bed / Trolley 1.45m
G-D1-016	Consult/Examination (Child Protection)	1	Consulting Room	25	18	Radiant Panels	Remote Sensor Adj.	Yes	Ceiling Cassette - Chilled Water	Central Supply and Extract	3	3	Balanced	F7	43	41	300	n/a	1000	A	80	Switch	Bed / Trolley 1.45m
G-D1-019	Equipment / General Store	1	Storage Area Equipment	28	16	Adjacent Space Transfer Air	None	No	None	Central Supply and Extract	3	3	Balanced	None	n/a	n/a	200	n/a	None	A	80	Automatic Controls	Floor 0m
G-D1-020	Phlebotomy Room	1	Consulting Room	25	18	Radiant Panels	Remote Sensor Adj.	Yes	Comfort Cooled Fresh Air	Central Supply and Extract	2 people at 10 l/s per person (3ach)	2 people at 10 l/s per person (3ach)	Balanced	F7	43	41	300	n/a	1000	A	80	Switch	Bed / Trolley 1.45m
G-D1-021	Child Protection Room	1	Consulting Room	25	18	Radiant Panels	Remote Sensor Adj.	Yes	Ceiling Cassette - Chilled Water	Central Supply and Extract	3	3	Balanced	F7	43	41	300	n/a	1000	A	80	Switch	Bed / Trolley 1.45m
G-D1-022	Mobile Hoist Bay	1	Circulation Equipment Storage Bays	28	16	Radiant Panels	Remote Sensor Adj.	No	None	None	0	0	n/a	None	43	n/a	200	n/a	None	A	80	Automatic Controls	Floor 0m
G-D1-023	Dirty Utility	1	Dirty utility	28	18	Adjacent Space Transfer Air	None	No	None	Central Dirty Extract	0	6	Negative	None	n/a	41	200	n/a	None	A	80	Automatic Controls	Floor 0m
G-D1-024	Beverage Bay	1	Tea Making	28	18	Adjacent Space Transfer	None	No	None	None	0	0	n/a	None	n/a	41	100 (KNX)	n/a	None	A	80	switch	Floor 0m
G-D1-025	Physical Measurement	1	Consulting Room	25	18	Radiant Panels	Remote Sensor Adj.	Yes	Wall Mounted Unit	Central Supply and Extract	3	3	Balanced	F7	43	41	300	n/a	1000	A	80	Switch	Bed / Trolley 1.45m
G-D1-026	Specimen/ Disabled WC	1	Toilet	28	18	Adjacent Space Transfer Air	None	No	None	Central Dirty Extract	0	10	Negative	None	n/a	41	200	n/a	None	A	80	Automatic Controls	Floor 0m
G-D1-027	Resuscitation Trolley Bay	1	Circulation Equipment Storage Bays	28	16	Adjacent Space Transfer	None	No	None	None	0	0	n/a	None	n/a	n/a	200	n/a	None	A	80	Automatic Controls	Floor 0m
G-D1-028	Infant Measuring Room	1	Infant Measuring Room	25	18	Radiant Panels	Remote Sensor Adj.	Yes	Wall Mounted Unit	Central Supply and Extract	3	3	Balanced	F7	43	41	300	n/a	1000	A	80	Switch	Bed / Trolley 1.45m
G-D1-029	Staff WC	1	Toilet	28	18	Adjacent Space Transfer Air	None	No	None	Central Dirty Extract	0	10	Negative	None	n/a	41	200	n/a	None	A	80	Automatic Controls	Floor 0m
G-D1-030	Linen Bay (1 Trolley)	1	Linen Bay	28	16	Adjacent Space Transfer	None	No	None	None	0	0	n/a	None	n/a	n/a	100 (KNX)	n/a	None	A	80	Automatic Controls	Floor 0m
G-D1-031	Clean Utility	1	Clean Utility	28	18	Radiant Panels	Remote Sensor Adj.	Yes	Comfort Cooled Fresh Air	Central Supply Air	6	0	Positive	F7	43	41	150	n/a	None	A	80	Automatic Controls	General working plane 1m

Room No.	Room Name	Qty	Room Function	Temp (max)	Temp (min)	Heating Type	Heating Control	Cooling (present)	Cooling (type)	Ventilation (type)	Supply (ac/hr)	Extract (ac/hr)	Relative pressure	Min filtration	Surface temp	Water temp	Normal lux	Night lux	Local lux	Standby grade	Colour render	Control	Plane
G-D1-032	Consult/Examination	1	Consulting Room	25	18	Radiant Panels	Remote Sensor Adj.	Yes	Ceiling Cassette - Chilled Water	Central Supply and Extract	3	3	Balanced	F7	43	41	300	n/a	1000	A	80	Switch	Bed / Trolley 1.45m
G-D1-033	Treatment Room (with prep area)	1	Treatment Room	25	18	Radiant Panels	Remote Sensor Adj.	Yes	Comfort Cooled Fresh Air	Central Supply Air	10	0	Positive	F7	43	41	500	n/a	1000	A	90	Switch	Bed / Trolley 1.45m
G-D1-034	Consult/Examination	1	Consulting Room	25	18	Radiant Panels	Remote Sensor Adj.	Yes	Ceiling Cassette - Chilled Water	Central Supply and Extract	3	3	Balanced	F7	43	41	300	n/a	1000	A	80	Switch	Bed / Trolley 1.45m
G-D1-035	Consult/Examination	1	Consulting Room	25	18	Radiant Panels	Remote Sensor Adj.	Yes	Ceiling Cassette - Chilled Water	Central Supply and Extract	3	3	Balanced	F7	43	41	300	n/a	1000	A	80	Switch	Bed / Trolley 1.45m
G-D1-036	Consult/Examination	1	Consulting Room	25	18	Radiant Panels	Remote Sensor Adj.	Yes	Ceiling Cassette - Chilled Water	Central Supply and Extract	3	3	Balanced	F7	43	41	300	n/a	1000	A	80	Switch	Bed / Trolley 1.45m
G-D1-037	Meeting Room	1	Meeting Room	25	18	Radiant Panels	Remote Sensor Adj.	Yes	Ceiling Cassette - Chilled Water	Central Supply and Extract	10 people at 10 l/s per person (9ach)	10 people at 10 l/s per person (9ach)	Balanced	F7	43	n/a	300	n/a	None	A	80	Automatic Controls	Desk 0.75 to 0.85m
G-D1-038	Consult/Examination	1	Consulting Room	25	18	Radiant Panels	Remote Sensor Adj.	Yes	Ceiling Cassette - Chilled Water	Central Supply and Extract	3	3	Balanced	F7	43	41	300	n/a	1000	A	80	Switch	Bed / Trolley 1.45m
G-D1-039	Consult/Examination	1	Consulting Room	25	18	Radiant Panels	Remote Sensor Adj.	Yes	Ceiling Cassette - Chilled Water	Central Supply and Extract	3	3	Balanced	F7	43	41	300	n/a	1000	A	80	Switch	Bed / Trolley 1.45m
G-D1-040	Consult/Multi-Disciplinary	1	Consulting Room	25	18	Radiant Panels	Remote Sensor Adj.	Yes	Ceiling Cassette - Chilled Water	Central Supply and Extract	8 people at 10 l/s per person (4ach)	8 people at 10 l/s per person (4ach)	Balanced	F7	43	41	300	n/a	1000	A	80	Switch	Bed / Trolley 1.45m
G-D1-041	Outpatients Management Office	1	Cellular / Ward Offices	28	18	Radiant Panels	Remote Sensor Adj.	Yes	Comfort Cooled Fresh Air	Central Supply and Extract	3 people at 10 l/s per person (4ach)	3 people at 10 l/s per person (4ach)	Balanced	F7	43	n/a	400	n/a	None	A	80	Switch	Desk 0.75 to 0.85m
G-D1-042	Shower Room	1	Bathroom	28	20	Radiant Panels	Remote Sensor Adj.	No	None	Central Dirty Extract	0	10	Negative	None	43	41	200	n/a	None	A	80	Automatic Controls	Floor 0m
G-D1-017	Corridor	1	Corridor	28	18	Radiant Panels	Remote Sensor Adj.	No	None	None	0	0	n/a	None	43	n/a	200	n/a	None	A	80	Automatic Controls	Floor 0m
G-D1-017A	Corridor	1	Corridor	28	18	None	None	No	None	None	0	0	n/a	None	n/a	n/a	200	n/a	None	A	80	Automatic Controls	Floor 0m
G-D1-017B	Corridor	1	Corridor	28	18	None	None	No	None	None	0	0	n/a	None	n/a	n/a	200	n/a	None	A	80	Automatic Controls	Floor 0m
G-D1-043	Corridor	1	Corridor	28	18	None	None	No	None	None	0	0	n/a	None	n/a	n/a	200	n/a	None	A	80	Automatic Controls	Floor 0m
1-D1-007	Corridor	1	Corridor	28	18	Radiant Panels	Remote Sensor Adj.	No	None	None	0	0	n/a	None	43	n/a	200	n/a	None	A	80	Automatic Controls	Floor 0m
G-D1-044	Switch Cupboard	1	Switch Cupboard	Not Controlled	Not Controlled	None	None	No	None	None	0	0	n/a	None	n/a	n/a	100	n/a	None	A	80	Automatic Controls	Floor 0m
1-D1-039	Switch Cupboard	1	Switch Cupboard	Not Controlled	Not Controlled	None	None	No	None	None	0	0	n/a	None	n/a	n/a	100	n/a	None	A	80	Automatic Controls	Floor 0m
1-D1-040	Manifold	1	Manifold	Not Controlled	Not Controlled	None	None	No	None	None	0	0	n/a	None	n/a	n/a	100	n/a	None	A	80	Automatic Controls	Floor 0m
G-D2-001	Waiting Area	1	Waiting Room	28	18	Radiant Panels	Remote Sensor Adj.	Yes	Comfort Cooled Fresh Air	Central Supply and Extract	6 people @ 10 l/s per person (9ach)	6 people @ 10 l/s per person (9ach)	Positive	F7	43	n/a	300	n/a	None	A	80	Switch	Floor 0m
G-D2-003	Admin Office	1	Cellular / Ward Offices	28	18	Radiant Panels	Remote Sensor Adj.	Yes	Wall Mounted Unit	Central Supply and Extract	4	3	Positive	F7	43	n/a	400	n/a	None	A	80	Switch	Desk 0.75 to 0.85m
G-D2-004	WC Staff	1	Toilet	28	18	Adjacent Space Transfer Air	None	No	None	Central Dirty Extract	0	10	Negative	None	n/a	41	200	n/a	None	A	80	Automatic Controls	Floor 0m
G-D2-005	Exercise Room/Lung Function Laboratory	1	Treatment Room	25	18	Radiant Panels	Remote Sensor Adj.	Yes	Comfort Cooled Fresh Air	Central Supply and Extract	6	6	Balanced	F7	43	41	500	n/a	1000	A	90	Switch	Bed / Trolley 1.45m
G-D2-006	Echocardiography Room	1	Diagnostic room	25	18	Warm Air - Reheat Battery	BMS Adjustable Sensor	Yes	Ceiling Cassette - Chilled Water	Central Supply and Extract	8	8	Balanced	F7	43	41	300	n/a	1000	A	80	Switch / Dimmer	General working plane 1m
G-D2-007	DSR	1	DSR	28	18	Adjacent Space Transfer Air	None	No	None	Central Dirty Extract	0	6	Negative	None	n/a	60	100	n/a	None	A	80	Automatic Controls	Floor 0m
G-D2-008	Store/ Equipment	1	Storage Area Equipment	28	16	Adjacent Space Transfer Air	None	No	None	Central General Extract	0	3	Negative	None	n/a	n/a	200	n/a	None	A	80	Automatic Controls	Floor 0m
G-D2-009	ECG Procedure Room	1	Consulting Room	25	18	Radiant Panels	Remote Sensor Adj.	Yes	Comfort Cooled Fresh Air	Central Supply and Extract	6	6	Balanced	F7	43	41	300	n/a	1000	A	80	Switch	Bed / Trolley 1.45m
G-D2-010	Admin Office	1	Cellular / Ward Offices	28	18	Radiant Panels	Remote Sensor Adj.	Yes	Ceiling Cassette - Chilled Water	Central Supply and Extract	4	3	Positive	F7	43	n/a	400	n/a	None	A	80	Automatic Controls	Desk 0.75 to 0.85m
G-D2-012	Domiciliary Sleep Studies	1	Consulting Room	25	18	Radiant Panels	Remote Sensor Adj.	Yes	Comfort Cooled Fresh Air	Central Supply and Extract	6	6	Balanced	F7	43	41	300	n/a	1000	A	80	Switch	Bed / Trolley 1.45m
G-D2-013	Lung Function Laboratory	1	Treatment Room	25	18	Radiant Panels	Remote Sensor Adj.	Yes	Ceiling Cassette - Chilled Water	Central Supply and Extract	6	6	Balanced	F7	43	41	500	n/a	1000	A	90	Switch	Bed / Trolley 1.45m
G-D2-014	Exercise Tolerance Test Room	1	Consulting Room	25	18	Radiant Panels	Remote Sensor Adj.	Yes	Comfort Cooled Fresh Air	Central Supply and Extract	6	6	Balanced	F7	43	41	300	n/a	1000	A	80	Switch	Bed / Trolley 1.45m
G-D2-015	Physical Measurement	1	Consulting Room	25	18	Adjacent Space Transfer	None	No	None	None	0	0	n/a	None	n/a	41	300	n/a	1000	A	80	Switch	Bed / Trolley 1.45m
G-D2-002	Corridor	1	Corridor	28	18	Radiant Panels	Remote Sensor Adj.	No	None	None	0	0	n/a	None	43	n/a	200	n/a	None	A	80	Automatic Controls	Floor 0m
G-D2-002A	Corridor	1	Corridor	28	18	None	None	No	None	None	0	0	n/a	None	n/a	n/a	200	n/a	None	A	80	Automatic Controls	Floor 0m
G-D2-002B	Corridor	1	Corridor	28	18	None	None	No	None	None	0	0	n/a	None	n/a	n/a	200	n/a	None	A	80	Automatic Controls	Floor 0m
1-D3-001	Staff Office	1	Cellular / Ward Offices	28	18	Radiant Panels	Remote Sensor Adj.	Yes	Comfort Cooled Fresh Air	Central Supply and Extract	4	3	Positive	F7	43	n/a	400	n/a	None	A	80	Automatic Controls	Desk 0.75 to 0.85m
1-D3-002	Parking Bay: pushchairs	1	Circulation Equipment Storage Bays	28	16	Adjacent Space Transfer	None	No	None	None	0	0	n/a	None	n/a	n/a	200	n/a	None	A	80	Automatic Controls	Floor 0m
1-D3-003	WC & handwash: specimen; wheelchair	1	Toilet	28	18	Adjacent Space Transfer Air	None	No	None	Central Dirty Extract	0	10	Negative	None	n/a	41	200	n/a	None	A	80	Automatic Controls	Floor 0m
1-D3-004	DSR	1	DSR	28	18	Adjacent Space Transfer Air	None	No	None	Central Dirty Extract	0	6	Negative	None	n/a	60	100	n/a	None	A	80	Automatic Controls	Floor 0m
1-D3-005	Examination Room: Fields test	1	Consulting Room	25	18	Radiant Panels	Remote Sensor Adj.	Yes	Comfort Cooled Fresh Air	Central Supply and Extract	4	3	Positive	F7	43	41	300	n/a	1000	A	80	Switch	Bed / Trolley 1.45m
1-D3-006	C/E Orthoptic (6 metre room)	1	Consulting Room	25	18	Radiant Panels	Remote Sensor Adj.	Yes	Ceiling Cassette - Chilled Water	Central Supply and Extract	4	3	Positive	F7	43	41	300	n/a	1000	A	80	Switch	Bed / Trolley 1.45m
1-D3-007	C/E Orthoptic (6 metre room)	1	Consulting Room	25	18	Radiant Panels	Remote Sensor Adj.	Yes	Ceiling Cassette - Chilled Water	Central Supply and Extract	4	3	Positive	F7	43	41	300	n/a	1000	A	80	Switch	Bed / Trolley 1.45m
1-D3-008	C/E Orthoptic (6 metre room)	1	Consulting Room	25	18	Radiant Panels	Remote Sensor Adj.	Yes	Ceiling Cassette - Chilled Water	Central Supply and Extract	4	3	Positive	F7	43	41	300	n/a	1000	A	80	Switch	Bed / Trolley 1.45m
1-D3-009	C/E Orthoptic (6 metre room)	1	Consulting Room	25	18	Radiant Panels	Remote Sensor Adj.	Yes	Ceiling Cassette - Chilled Water	Central Supply and Extract	4	3	Positive	F7	43	41	300	n/a	1000	A	80	Switch	Bed / Trolley 1.45m
1-D4-001	Waiting Area	1	Waiting Room	28	18	Radiant Panels	Remote Sensor Adj.	Yes	Comfort Cooled Fresh Air	Central Supply and Extract	7 people @ 10 l/s per person (7ach)	7 people @ 10 l/s per person (7ach)	Balanced	F7	43	n/a	300	n/a	None	A	80	Switch	Floor 0m
1-D4-002	ABR Room	1	Treatment Room	25	18	Radiant Panels	Remote Sensor Adj.	Yes	Comfort Cooled Fresh Air	Central Supply and Extract	4	6	Negative	F7	43	41	500	n/a	1000	A	90	Switch	Bed / Trolley 1.45m
1-D4-003	Test Room	1	Treatment Room	25	18	Radiant Panels	Remote Sensor Adj.	Yes	Comfort Cooled Fresh Air	Central Supply and Extract	4	6	Negative	F7	43	41	500	n/a	1000	A	90	Switch	Bed / Trolley 1.45m
1-D4-004	Shared Staff Office	1	Cellular / Ward Offices	28	18	Radiant Panels	Remote Sensor Adj.	Yes	Comfort Cooled Fresh Air	Central Supply and Extract	6	4	Positive	F7	43	n/a	400	n/a	None	A	80	Switch	Desk 0.75 to 0.85m

Room No.	Room Name	Qty	Room Function	Temp (max)	Temp (min)	Heating Type	Heating Control	Cooling (present)	Cooling (type)	Ventilation (type)	Supply (ac/hr)	Extract (ac/hr)	Relative pressure	Min filtration	Surface temp	Water temp	Normal lux	Night lux	Local lux	Standby grade	Colour render	Control	Plane
1-D4-005	Testing/Clinic Rooms	1	Consulting Room	25	18	Warm Air - Reheat Battery	BMS Adjustable Sensor	Yes	Comfort Cooled Fresh Air	Central Supply and Extract	3	3	Balanced	F7	n/a	n/a	300	n/a	None	A	80	Switch	Desk 0.75 to 0.85m
1-D4-006	Obs/Control	1	Diagnostic room	25	18	Radiant Panels	Remote Sensor Adj.	Yes	Comfort Cooled Fresh Air	Central Supply and Extract	8	8	Balanced	F7	43	41	300	n/a	1000	A	80	Switch / Dimmer	General working plane 1m
1-D4-007	Testing/Clinic Rooms	1	Consulting Room	25	18	Warm Air - Reheat Battery	BMS Adjustable Sensor	Yes	Comfort Cooled Fresh Air	Central Supply and Extract	3	3	Balanced	F7	n/a	n/a	300	n/a	None	A	80	Switch	Desk 0.75 to 0.85m
1-D4-008	Obs/Control	1	Diagnostic room	25	18	Radiant Panels	Remote Sensor Adj.	Yes	Comfort Cooled Fresh Air	Central Supply and Extract	8	8	Balanced	F7	43	41	300	n/a	1000	A	80	Switch / Dimmer	General working plane 1m
1-D4-009	Waiting Area	1	Waiting Room	28	18	Radiant Panels	Remote Sensor Adj.	Yes	Comfort Cooled Fresh Air	Central Supply and Extract	2 people @ 10 l/s per person (6ach)	2 people @ 10 l/s per person (6ach)	Balanced	F7	43	n/a	300	n/a	None	A	80	Switch	Floor 0m
1-D4-010	Work Room	1	Small Workshop	28	18	Radiant Panels	Remote Sensor Adj.	Yes	Comfort Cooled Fresh Air	Central Supply and Extract	4	6	Negative	F7	43	41	300	n/a	None	A	80	Switch	Desk 0.75 to 0.85m
1-D4-012	Store	1	Storage Area Equipment	28	16	Radiant Panels	Remote Sensor Adj.	No	None	Central General Extract	0	3	Negative	None	43	n/a	200	n/a	None	A	80	Automatic Controls	Floor 0m
1-D4-013	Mould Room	1	Small Workshop	28	18	Radiant Panels	Remote Sensor Adj.	Yes	Comfort Cooled Fresh Air	Central Supply and Extract	4	6	Negative	F7	43	41	300	n/a	None	A	80	Switch	Desk 0.75 to 0.85m
1-D4-011	Corridor	1	Corridor	28	18	None	None	No	None	None	0	0	n/a	None	n/a	n/a	200	n/a	None	A	80	Automatic Controls	Floor 0m
1-D4-011A	Corridor	1	Corridor	28	18	None	None	No	None	None	0	0	n/a	None	n/a	n/a	200	n/a	None	A	80	Automatic Controls	Floor 0m
1-D4-011B	Corridor	1	Corridor	28	18	None	None	No	None	None	0	0	n/a	None	n/a	n/a	200	n/a	None	A	80	Automatic Controls	Floor 0m
G-D5-002	Laboratory	1	Laboratory	25	18	Radiant Panels	Remote Sensor Adj.	Yes	Wall Mounted Unit	Central Supply and Extract	6	6	Balanced	F7	43	60	500	n/a	None	A	80	Switch	General working plane 1m
G-D5-003	Clean Utility / Dental Store	1	Clean Utility	28	18	Radiant Panels	Remote Sensor Adj.	Yes	Comfort Cooled Fresh Air	Central Supply Air	6	0	Positive	F7	43	41	150	n/a	None	A	80	Automatic Controls	General working plane 1m
G-D5-004	Surgery (multi-disciplinary)	1	Dental Surgery	25	18	warm air via AHU Battery	Local / BMS Adjustable Sensor	Yes	Comfort Cooled Fresh Air	Central Supply and Extract	10	10	Balanced	F7	43	41	500	n/a	10,000 - 100,000	A	90	Switch	Bed / Trolley 1.45m
G-D5-005	Dirty Utility	1	Dirty utility	28	18	Adjacent Space Transfer Air	None	No	None	Central Dirty Extract	0	6	Negative	None	n/a	41	200	n/a	None	A	80	Automatic Controls	Floor 0m
G-D5-006	Mobile Inter-oral Storage	1	Storage Area Equipment	28	16	Radiant Panels	Remote Sensor Adj.	No	None	Central General Extract	0	3	Negative	None	43	n/a	200	n/a	None	A	80	Automatic Controls	Floor 0m
G-D5-007	Recovery	1	Recovery Bay / Recovery Room	25	20	Radiant Panels	Remote Sensor Adj.	Yes	Comfort Cooled Fresh Air	Central Supply and Extract	15	15	Balanced	F7	43	41	500	n/a	None	A	90	Switch / Dimmer	Bed / Trolley 1.45m
G-D5-008	Surgeries (standard)	1	Dental Surgery	25	18	warm air via AHU Battery	Local / BMS Adjustable Sensor	Yes	Comfort Cooled Fresh Air	Central Supply and Extract	10	10	Balanced	F7	43	41	500	n/a	10,000 - 100,000	A	90	Switch	Bed / Trolley 1.45m
G-D5-009	Surgeries (standard)	1	Dental Surgery	25	18	warm air via AHU Battery	Local / BMS Adjustable Sensor	Yes	Comfort Cooled Fresh Air	Central Supply and Extract	10	10	Balanced	F7	43	41	500	n/a	10,000 - 100,000	A	90	Switch	Bed / Trolley 1.45m
G-D5-010	Surgeries (standard)	1	Dental Surgery	25	18	warm air via AHU Battery	Local / BMS Adjustable Sensor	Yes	Comfort Cooled Fresh Air	Central Supply and Extract	10	10	Balanced	F7	43	41	500	n/a	10,000 - 100,000	A	90	Switch	Bed / Trolley 1.45m
G-D5-001	Corridor	1	Corridor	28	18	Radiant Panels	Remote Sensor Adj.	No	None	None	0	0	n/a	None	43	n/a	200	n/a	None	A	80	Automatic Controls	Floor 0m
G-D5-011	Corridor	1	Corridor	28	18	None	None	No	None	None	0	0	n/a	None	n/a	n/a	200	n/a	None	A	80	Automatic Controls	Floor 0m
1-D6-001	Dictation/ 1:1/Phone Booth	1	Cellular / Ward Offices	28	18	Adjacent Space Transfer	None	Yes	Comfort Cooled Fresh Air	Central Supply and Extract	4	4	Balanced	F7	n/a	n/a	400	n/a	None	A	80	Switch	Desk 0.75 to 0.85m
1-D6-002	Staff Office - All specialties (39 person)	1	Open Plan Office	28	18	Radiant Panels	Remote Sensor Adj.	Yes	Comfort Cooled Fresh Air	Central Supply and Extract	6	4	Positive	F7	43	n/a	400	n/a	None	A	80	Switch	Desk 0.75 to 0.85m
1-D6-003	Meeting Room - 6 person	1	Meeting Room	25	18	Radiant Panels	Remote Sensor Adj.	Yes	Wall Mounted Unit	Central Supply and Extract	6 people at 10 l/s per person (9ach)	6 people at 10 l/s per person (9ach)	Balanced	F7	43	n/a	300	n/a	None	A	80	Switch	Desk 0.75 to 0.85m
1-D6-004	Dictation/ 1:1/Phone Booth	1	Cellular / Ward Offices	28	18	Adjacent Space Transfer	None	Yes	Comfort Cooled Fresh Air	Central Supply and Extract	4	4	Balanced	F7	n/a	n/a	400	n/a	None	A	80	Switch	Desk 0.75 to 0.85m
1-D6-005	Meeting Room - 4 person	1	Meeting Room	25	18	Radiant Panels	Remote Sensor Adj.	Yes	Wall Mounted Unit	Central Supply and Extract	4 people at 10 l/s per person (10ach)	4 people at 10 l/s per person (10ach)	Balanced	F7	43	n/a	300	n/a	None	A	80	Switch	Desk 0.75 to 0.85m
1-D6-006	WC - Staff	1	Toilet	28	18	Adjacent Space Transfer Air	None	No	None	Central Dirty Extract	0	10	Negative	None	n/a	41	200	n/a	None	A	80	Automatic Controls	Floor 0m
1-D6-007	WC - Staff	1	Toilet	28	18	Adjacent Space Transfer Air	None	No	None	Central Dirty Extract	0	10	Negative	None	n/a	41	200	n/a	None	A	80	Automatic Controls	Floor 0m
1-D6-009	Dictation/ 1:1/Phone Booth	1	Cellular / Ward Offices	28	18	Adjacent Space Transfer	None	Yes	Comfort Cooled Fresh Air	Central Supply and Extract	4	4	Balanced	F7	n/a	n/a	400	n/a	None	A	80	Automatic Controls	Desk 0.75 to 0.85m
1-D6-010	Dictation/ 1:1/Phone Booth	1	Cellular / Ward Offices	28	18	Adjacent Space Transfer	None	Yes	Comfort Cooled Fresh Air	Central Supply and Extract	4	4	Balanced	F7	n/a	n/a	400	n/a	None	A	80	Automatic Controls	Desk 0.75 to 0.85m
1-D6-014	Store - Physio	1	Storage Area Equipment	28	16	Radiant Panels	Remote Sensor Adj.	No	None	Central General Extract	0	3	Negative	None	43	n/a	200	n/a	None	A	80	Automatic Controls	Floor 0m
1-D6-016	Management Office	1	Cellular / Ward Offices	28	18	Radiant Panels	Remote Sensor Adj.	Yes	Comfort Cooled Fresh Air	Central Supply and Extract	6	4	Positive	F7	43	n/a	400	n/a	None	A	80	Switch	Desk 0.75 to 0.85m
1-D6-017	A&C Staff Office/Appliance Officer	1	Cellular / Ward Offices	28	18	Radiant Panels	Remote Sensor Adj.	Yes	Comfort Cooled Fresh Air	Central Supply and Extract	6	4	Positive	F7	43	n/a	400	n/a	None	A	80	Switch	Desk 0.75 to 0.85m
1-D6-018	DSR	1	DSR	28	18	Adjacent Space Transfer Air	None	No	None	Central Dirty Extract	0	6	Negative	None	n/a	60	100	n/a	None	A	80	Automatic Controls	Floor 0m
1-D6-019	Equipment Decontamination	1	Equipment Decontamination	28	18	Radiant Panels	Remote Sensor Adj.	Yes	Comfort Cooled Fresh Air	Central Supply Air	6	0	Positive	F7	43	41	200	n/a	None	A	80	Automatic Controls	General working plane 1m
1-D6-020	Dietetic Clinic Room	1	Diagnostic room	25	18	Radiant Panels	Remote Sensor Adj.	Yes	Comfort Cooled Fresh Air	Central Supply and Extract	8	8	Balanced	F7	43	41	300	n/a	None	A	80	Switch / Dimmer	General working plane 1m
1-D6-021	Dietetic Clinic Room	1	Diagnostic room	25	18	Radiant Panels	Remote Sensor Adj.	Yes	Comfort Cooled Fresh Air	Central Supply and Extract	8	8	Balanced	F7	43	41	300	n/a	None	A	80	Switch / Dimmer	General working plane 1m
1-D6-022	Waiting Play Area	1	Waiting Room	28	18	Radiant Panels	Remote Sensor Adj.	Yes	Comfort Cooled Fresh Air	Central Supply and Extract	16 people at 10 l/s per person (6ach)	16 people at 10 l/s per person (6ach)	Balanced	F7	43	n/a	300	n/a	None	A	80	Switch	Floor 0m
1-D6-023	Reception	1	Reception	28	18	Radiant Panels	Remote Sensor Adj.	Yes	Comfort Cooled Fresh Air	Central Supply and Extract	2 people at 10 l/s per person (5ach)	2 people at 10 l/s per person (5ach)	Balanced	F7	43	n/a	300	n/a	None	A	80	Automatic Controls	Desk 0.75 to 0.85m
1-D6-024	WC - Wheelchair accessible	1	Toilet	28	18	Adjacent Space Transfer Air	None	No	None	Central Dirty Extract	0	10	Negative	None	n/a	41	200	n/a	None	A	80	Automatic Controls	Floor 0m
1-D6-025	Infant Measuring Room	1	Consulting Room	25	18	Radiant Panels	Remote Sensor Adj.	Yes	Wall Mounted Unit	Central Supply and Extract	2 people at 10 l/s per person (5ach)	2 people at 10 l/s per person (5ach)	Balanced	F7	43	41	300	n/a	1000	A	80	Switch	Bed / Trolley 1.45m
1-D6-026	Linen Bay	1	Linen Bay	28	16	Adjacent Space Transfer	None	No	None	None	0	0	n/a	None	n/a	n/a	100 (KNX)	n/a	None	A	80	Automatic Controls	Floor 0m
1-D6-027	Standard Treatment Room	1	Treatment Room	25	18	Radiant Panels	Remote Sensor Adj.	Yes	Comfort Cooled Fresh Air	Central Supply Air	10	0	Positive	F7	43	41	500	n/a	1000	A	90	Switch	Bed / Trolley 1.45m
1-D6-028	Standard Treatment Room	1	Treatment Room	25	18	Radiant Panels	Remote Sensor Adj.	Yes	Comfort Cooled Fresh Air	Central Supply Air	10	0	Positive	F7	43	41	500	n/a	1000	A	90	Switch	Bed / Trolley 1.45m
1-D6-029	Standard Treatment Room	1	Treatment Room	25	18	Radiant Panels	Remote Sensor Adj.	Yes	Comfort Cooled Fresh Air	Central Supply Air	10	0	Positive	F7	43	41	500	n/a	1000	A	90	Switch	Bed / Trolley 1.45m
1-D6-030	Standard Distraction Free Treatment Room	1	Consulting Room	25	18	Radiant Panels	Remote Sensor Adj.	Yes	Comfort Cooled Fresh Air	Central Supply	10	0	Positive	F7	43	41	300	n/a	1000	A	80	Switch	Bed / Trolley 1.45m

Room No.	Room Name	Qty	Room Function	Temp (max)	Temp (min)	Heating Type	Heating Control	Cooling (present)	Cooling (type)	Ventilation (type)	Supply (ac/hr)	Extract (ac/hr)	Relative pressure	Min filtration	Surface temp	Water temp	Normal lux	Night lux	Local lux	Standby grade	Colour render	Control	Plane
1-D6-031	Store - Dietetic	1	Storage Area Equipment	28	16	Adjacent Space Transfer Air	None	No	None	Central General Extract	0	3	Negative	None	n/a	n/a	200	n/a	None	A	80	Automatic Controls	Floor 0m
1-D6-032	Large Distraction Free Treatment Room	1	Consulting Room	25	18	Radiant Panels	Remote Sensor Adj.	Yes	Comfort Cooled Fresh Air	Central Supply	10	0	Positive	F7	43	41	300	n/a	1000	A	80	Switch	Bed / Trolley 1.45m
1-D6-035	Standard Distraction Free Treatment Room	1	Consulting Room	25	18	Radiant Panels	Remote Sensor Adj.	Yes	Comfort Cooled Fresh Air	Central Supply	10	0	Positive	F7	43	41	300	n/a	1000	A	80	Switch	Bed / Trolley 1.45m
1-D6-036	Treatment Room (OT equip)	1	Treatment Room	25	18	Radiant Panels	Remote Sensor Adj.	Yes	Comfort Cooled Fresh Air	Central Supply Air	10	0	Positive	F7	43	41	500	n/a	1000	A	90	Switch	Bed / Trolley 1.45m
1-D6-037	Store - Physio	1	Storage Area Equipment	28	16	Adjacent Space Transfer Air	None	No	None	Central General Extract	0	3	Negative	None	n/a	n/a	200	n/a	None	A	80	Automatic Controls	Floor 0m
1-D6-038	Store - OT	1	Storage Area Equipment	28	16	Adjacent Space Transfer Air	None	No	None	Central General Extract	0	3	Negative	None	n/a	n/a	200	n/a	None	A	80	Automatic Controls	Floor 0m
1-D6-039	Rehabilitation Room	1	Treatment Room	25	18	Radiant Panels	Remote Sensor Adj.	Yes	Comfort Cooled Fresh Air	Central Supply and Extract	5	6	Negative	F7	43	41	500	n/a	1000	A	90	Switch	Bed / Trolley 1.45m
1-D6-040	Splinting / Casting Room	1	Consulting Room	25	18	Radiant Panels	Remote Sensor Adj.	Yes	Ceiling Cassette - Chilled Water	Central Supply and Extract	3	3	Balanced	F7	43	41	300	n/a	1000	A	80	Switch	Bed / Trolley 1.45m
1-D6-041	Store - OT	1	Storage Area Equipment	28	16	Adjacent Space Transfer Air	None	No	None	Central General Extract	0	3	Negative	None	n/a	n/a	200	n/a	None	A	80	Automatic Controls	Floor 0m
1-D6-042	Pantry	1	Pantry	28	18	Radiant Panels	Remote Sensor Adj.	Yes	Comfort Cooled Fresh Air	Central Supply and Extract	6	8	Negative	F7	43	41	300	n/a	None	A	80	Switch	Floor 0m
1-D6-043	Store - Physio	1	Storage Area Equipment	28	16	Adjacent Space Transfer Air	None	No	None	Central General Extract	0	3	Negative	None	n/a	n/a	200	n/a	None	A	80	Automatic Controls	Floor 0m
1-D6-044	WC - Staff	1	Toilet	28	18	Adjacent Space Transfer Air	None	No	None	Central Dirty Extract	0	10	Negative	None	n/a	41	200	n/a	None	A	80	Automatic Controls	Floor 0m
1-D6-045	Store - SALT	1	Storage Area Equipment	28	16	Adjacent Space Transfer Air	None	No	None	Central General Extract	0	3	Negative	None	n/a	n/a	200	n/a	None	A	80	Automatic Controls	Floor 0m
1-D6-046	Rehabilitation Room	1	Treatment Room	25	18	Radiant Panels	Remote Sensor Adj.	Yes	Comfort Cooled Fresh Air	Central Supply and Extract	5	6	Negative	F7	43	41	500	n/a	1000	A	90	Switch	Bed / Trolley 1.45m
1-D6-047	Store - OT	1	Storage Area Equipment	28	16	Adjacent Space Transfer Air	None	No	None	Central General Extract	0	3	Negative	None	n/a	n/a	200	n/a	None	A	80	Automatic Controls	Floor 0m
1-D6-048	Rehabilitation Room	1	Treatment Room	25	18	Radiant Panels	Remote Sensor Adj.	Yes	Comfort Cooled Fresh Air	Central Supply and Extract	5	6	Negative	F7	43	41	500	n/a	1000	A	90	Switch	Bed / Trolley 1.45m
1-D6-049	Changing Cubicles	1	Changing Facilities	28	18	Radiant Panels	Remote Sensor Adj.	Yes	Comfort Cooled Fresh Air	Central Supply and Extract	5	4	Positive	F7	43	41	100	n/a	None	A	80	Automatic Controls	Floor 0m
1-D6-050	Store - Physio	1	Storage Area Equipment	28	16	Adjacent Space Transfer Air	None	No	None	Central General Extract	0	3	Negative	None	n/a	n/a	200	n/a	None	A	80	Automatic Controls	Floor 0m
1-D6-052	Store - Physio	1	Storage Area Equipment	28	16	Adjacent Space Transfer Air	None	No	None	Central General Extract	0	3	Negative	None	n/a	n/a	200	n/a	None	A	80	Automatic Controls	Floor 0m
1-D6-053	Rehabilitation Room	1	Treatment Room	25	18	Radiant Panels	Remote Sensor Adj.	Yes	Ceiling Cassette - Chilled Water	Central Supply and Extract	5	6	Negative	F7	43	41	500	n/a	1000	A	90	Switch	Bed / Trolley 1.45m
1-D6-054	Rehabilitation Room (inc CV equip)	1	Treatment Room	25	18	Radiant Panels	Remote Sensor Adj.	Yes	Ceiling Cassette - Chilled Water	Central Supply and Extract	5	6	Negative	F7	43	41	500	n/a	1000	A	90	Switch	Bed / Trolley 1.45m
1-D6-057	WC - assisted (large+changing)	1	Toilet	28	18	Radiant Panels	Remote Sensor Adj.	No	None	Central Dirty Extract	0	10	Negative	None	43	41	200	n/a	None	A	80	Automatic Controls	Floor 0m
1-D6-060	Resus Bay	1	Resuscitation Bay	28	16	Adjacent Space Transfer	None	No	None	None	0	0	n/a	None	n/a	n/a	200	n/a	None	A	80	Automatic Controls	Floor 0m
1-D6-061	Hoist Bay	1	Circulation Equipment Storage Bays	28	16	Radiant Panels	Remote Sensor Adj.	No	None	None	0	0	n/a	None	43	n/a	200	n/a	None	A	80	Automatic Controls	Floor 0m
1-D6-034	Corridor	1	Corridor	28	18	Radiant Panels	Remote Sensor Adj.	No	None	Central General Extract	0	5	Negative	None	43	n/a	200	n/a	None	A	80	Automatic Controls	Floor 0m
1-D6-055	Corridor	1	Corridor	28	18	None	None	No	None	None	0	0	n/a	None	n/a	n/a	200	n/a	None	A	80	Automatic Controls	Floor 0m
1-D6-056	Corridor	1	Corridor	28	18	Radiant Panels	Remote Sensor Adj.	No	None	Central General Extract	0	4	Negative	None	43	n/a	200	n/a	None	A	80	Automatic Controls	Floor 0m
1-D6-062	Corridor	1	Corridor	28	18	None	None	No	None	Central General Extract	0	3	Negative	None	n/a	n/a	200	n/a	None	A	80	Automatic Controls	Floor 0m
1-D6-058	Riser/Switch Cupboard	1	Switch Cupboard	Not Controlled	Not Controlled	None	None	No	None	None	0	0	n/a	None	n/a	n/a	100	n/a	None	A	80	Automatic Controls	Floor 0m
1-D6-059	Riser/Switch Cupboard	1	Switch Cupboard	Not Controlled	Not Controlled	None	None	No	None	None	0	0	n/a	None	n/a	n/a	100	n/a	None	A	80	Automatic Controls	Floor 0m
1-D7-001	Assisted Bathroom	1	Bathroom	28	20	Radiant Panels	Remote Sensor Adj.	No	None	Central Dirty Extract	0	10	Negative	None	43	41	200	n/a	None	A	80	Switch	Floor 0m
1-D7-002	Dressings / Doppler Store	1	Storage Area Equipment	28	16	Adjacent Space Transfer Air	None	No	None	Central General Extract	0	3	Negative	None	n/a	n/a	200	n/a	None	A	80	Automatic Controls	Floor 0m
1-D7-003	Dressings Room (Burns)	1	Consulting Room	25	18	Radiant Panels	Remote Sensor Adj.	Yes	Comfort Cooled Fresh Air	Central Supply	10	0	Positive	F7	43	41	300	n/a	1000	A	80	Switch	Bed / Trolley 1.45m
1-D7-004	Sluice	1	Dirty utility	28	18	Adjacent Space Transfer Air	None	No	None	Central Dirty Extract	0	6	Negative	None	n/a	41	200	n/a	None	A	80	Automatic Controls	Floor 0m
1-D7-005	01:01	1	Circulation Areas	28	18	Radiant Panels	Remote Sensor Adj.	Yes	Comfort Cooled Fresh Air	Central Supply and Extract	4	4	Balanced	F7	43	n/a	200	n/a	None	A	80	Automatic Controls	Floor 0m
1-D7-006	Dressings Room (Burns)	1	Consulting Room	25	18	Radiant Panels	Remote Sensor Adj.	Yes	Comfort Cooled Fresh Air	Central Supply Air	10	0	Positive	F7	43	41	300	n/a	1000	A	80	Switch	Bed / Trolley 1.45m
1-D7-007	Disposal Hold	1	Disposal Hold	28	16	Adjacent Space Transfer Air	None	No	None	Central Dirty Extract	0	6	Negative	None	n/a	n/a	200	n/a	None	A	80	Automatic Controls	Floor 0m
1-D7-008	Corridor	1	Corridor	28	18	None	None	No	None	None	0	0	n/a	None	n/a	n/a	200	n/a	None	A	80	Automatic Controls	Floor 0m
G-D8-001	Open Plan Area	1	Waiting Room	28	18	Radiant Panels	Remote Sensor Adj.	Yes	Comfort Cooled Fresh Air	Central Supply and Extract	6	4	Positive	F7	43	n/a	300	n/a	None	A	80	Switch	Floor 0m
G-D8-002	Interview Room	1	Meeting Room	25	18	Radiant Panels	Remote Sensor Adj.	Yes	Ceiling Cassette - Chilled Water	Central Supply and Extract	4	4	Balanced	F7	43	n/a	300	n/a	None	A	80	Automatic Controls	Desk 0.75 to 0.85m
G-D8-003	Corridor	1	Corridor	28	18	None	None	No	None	None	0	0	n/a	None	n/a	n/a	200	n/a	None	A	80	Automatic Controls	Floor 0m
G-D8-005	Switch Cupboard	1	Switch Cupboard	Not Controlled	Not Controlled	None	None	No	None	None	0	0	n/a	None	n/a	n/a	100	n/a	None	A	80	Automatic Controls	Floor 0m
3-D9-002	Waiting Area	1	Waiting Room	28	18	Radiant Panels	Remote Sensor Adj.	Yes	Comfort Cooled Fresh Air	Central Supply and Extract	5	5	Balanced	F7	43	n/a	300	n/a	None	A	80	Switch	Floor 0m
3-D9-003	Reception:1 staff	1	Reception	28	18	Adjacent Space Transfer Air	None	Yes	Wall Mounted Unit	Central Supply and Extract	3	3	Balanced	F7	n/a	n/a	300	n/a	None	A	80	Switch	Desk 0.75 to 0.85m
3-D9-004	WC - Wheelchair accessible	1	Toilet	28	18	Adjacent Space Transfer Air	None	No	None	Central Dirty Extract	0	10	Negative	None	n/a	41	200	n/a	None	A	80	Automatic Controls	Floor 0m
3-D9-005	Disposal Hold	1	Disposal Hold	28	16	Adjacent Space Transfer Air	None	No	None	Central Dirty Extract	0	6	Negative	None	n/a	n/a	200	n/a	None	A	80	Automatic Controls	Floor 0m
3-D9-006	Interview, Counselling & Quiet Room	1	Meeting Room	25	18	Radiant Panels	Remote Sensor Adj.	Yes	Ceiling Cassette - Chilled Water	Central Supply and Extract	4 people at 10 l/s per person (6ach)	4 people at 10 l/s per person (6ach)	Balanced	F7	43	n/a	300	n/a	None	A	80	Switch	Desk 0.75 to 0.85m
3-D9-007	Office and Storage 2 staff	1	Cellular / Ward Offices	28	18	Radiant Panels	Remote Sensor Adj.	Yes	Ceiling Cassette - Chilled Water	Central Supply and Extract	4	3	Positive	F7	43	n/a	400	n/a	None	A	80	Switch	Desk 0.75 to 0.85m
3-D9-008	Resuscitation Trolley Bay	1	Resus Trolley bay	28	16	Adjacent Space Transfer Air	None	No	None	None	0	0	n/a	None	n/a	n/a	200	n/a	None	A	80	Automatic Controls	Floor 0m
3-D9-009	Physical Measurement	1	Consulting Room	25	18	Radiant Panels	Remote Sensor Adj.	No	None	None	0	0	n/a	None	43	41	300	n/a	1000	A	80	Switch	Bed / Trolley 1.45m
3-D9-010	Waiting Play Area	1	Waiting Room	28	18	Radiant Panels	Remote Sensor Adj.	Yes	Comfort Cooled Fresh Air	Central Supply and Extract	5	5	Balanced	F7	43	n/a	300	n/a	None	A	80	Switch	Floor 0m
3-D9-011	Consult/Examination	1	Consulting Room	25	18	Radiant Panels	Remote Sensor Adj.	Yes	Ceiling Cassette - Chilled Water	Central Supply and Extract	3	3	Balanced	F7	43	41	300	n/a	1000	A	80	Switch	Bed / Trolley 1.45m

Room No.	Room Name	Qty	Room Function	Temp (max)	Temp (min)	Heating Type	Heating Control	Cooling (present)	Cooling (type)	Ventilation (type)	Supply (ac/hr)	Extract (ac/hr)	Relative pressure	Min filtration	Surface temp	Water temp	Normal lux	Night lux	Local lux	Standby grade	Colour render	Control	Plane
3-D9-012	Clean Utility	1	Clean Utility	28	18	Radiant Panels	Remote Sensor Adj.	Yes	Comfort Cooled Fresh Air	Central Supply Air	6	0	Positive	F7	43	41	150	n/a	None	A	80	Automatic Controls	General working plane 1m
3-D9-013	Treatment Room	1	Treatment Room	25	18	Radiant Panels	Remote Sensor Adj.	Yes	Comfort Cooled Fresh Air	Central Supply Air	10	0	Positive	F7	43	41	500	n/a	1000	A	90	Switch	Bed / Trolley 1.45m
3-D9-014	Pantry	1	Pantry	28	18	Radiant Panels	Remote Sensor Adj.	Yes	Comfort Cooled Fresh Air	Central Supply and Extract	6	8	Negative	F7	43	41	300	n/a	None	A	80	Switch	Floor 0m
3-D9-015	Ward Management Office	1	Cellular / Ward Offices	28	18	Radiant Panels	Remote Sensor Adj.	Yes	Comfort Cooled Fresh Air	Central Supply and Extract	4	3	Positive	F7	43	n/a	400	n/a	None	A	80	Switch	Desk 0.75 to 0.85m
3-D9-016	Patient Treatment Lounge	1	Patient Treatment Lounge	25	18	Radiant Panels	Remote Sensor Adj.	Yes	Comfort Cooled Fresh Air	Central Supply and Extract	6	8	Negative	F7	43	41	500	n/a	1000	A	90	Switch	Bed / Trolley 1.45m
3-D9-017	Dirty Utility	1	Dirty utility	28	18	Adjacent Space Transfer Air	None	No	None	Central Dirty Extract	0	6	Negative	None	n/a	41	200	n/a	None	A	80	Automatic Controls	Floor 0m
3-D9-018	Touchdown Base	1	Staff base	28	18	Radiant Panels	Remote Sensor Adj.	No	None	None	0	0	n/a	None	43	n/a	200/300	n/a	1000	A	80	Switch / Dimmer	General working plane 1m
3-D9-019	Single Bedroom	1	Bedroom	28	18	Radiant Panels	Remote Sensor Adj.	Yes	Comfort Cooled Fresh Air	Natural & Central Supply Air	4	via ensuite	Balanced	F7	43	41	100	5	300	A	80	Switch / Dimmer	Bed / Trolley 1.45m
3-D9-020	En-suite WC / WHB	1	Toilet	28	18	Adjacent Space Transfer Air	None	No	None	Central Dirty Extract	0	10	Negative	None	n/a	41	200	n/a	None	A	80	Automatic Controls	Floor 0m
3-D9-021	Parking Bay: 1 patient trolley/whch	1	Circulation Equipment Storage Bays	28	16	Adjacent Space Transfer Air	None	No	None	Central General Extract	0	3	Negative	None	n/a	n/a	200	n/a	None	A	80	Automatic Controls	Floor 0m
3-D9-022	Multi Bed Room: day care, 3 beds	1	Multi-bed Wards	28	18	Radiant Panels	Remote Sensor Adj.	Yes	Comfort Cooled Fresh Air	Natural and Central Supply Air	4	via ensuite	positive to ensuite	F7	43	41	100	5	300	A	80	switch / dimmer	Bed / Trolley 1.45m
3-D9-023	En-suite wheelchair-accessible WC, Shower & wash Multi	1	Bathroom	28	20	Radiant Panels	Remote Sensor Adj.	No	None	Central Dirty Extract	0	10	Negative	None	43	41	200	n/a	None	A	80	Automatic Controls	Floor 0m
3-D9-024	Single Bedroom	1	Bedroom	28	18	Radiant Panels	Remote Sensor Adj.	Yes	Comfort Cooled Fresh Air	Natural & Central Supply Air	4	via ensuite	Balanced	F7	43	41	100	5	300	A	80	Switch / Dimmer	Bed / Trolley 1.45m
3-D9-025	En-suite WC / WHB	1	Toilet	28	18	Radiant Panels	Remote Sensor Adj.	No	None	Central Dirty Extract	0	10	Negative	None	43	41	200	n/a	None	A	80	Automatic Controls	Floor 0m
3-D9-026	Linen Bay	1	Linen Bay	28	16	Adjacent Space Transfer Air	None	No	None	None	0	0	n/a	None	n/a	n/a	100 (KNX)	n/a	None	A	80	Automatic Controls	Floor 0m
3-D9-027	Store - General	1	Storage Area Equipment	28	16	Adjacent Space Transfer Air	None	No	None	Central General Extract	0	3	Negative	None	n/a	n/a	200	n/a	None	A	80	Automatic Controls	Floor 0m
3-D9-028	WC - Staff	1	Toilet	28	18	Adjacent Space Transfer Air	None	No	None	Central Dirty Extract	0	10	Negative	None	n/a	41	200	n/a	None	A	80	Automatic Controls	Floor 0m
3-D9-030	DSR	1	DSR	28	18	Adjacent Space Transfer Air	None	No	None	Central Dirty Extract	0	6	Negative	None	n/a	60	100	n/a	None	A	80	Automatic Controls	Floor 0m
3-D9-001	Corridor	1	Corridor	28	18	Radiant Panels	Remote Sensor Adj.	No	None	None	0	0	n/a	None	43	n/a	200	n/a	None	A	80	Automatic Controls	Floor 0m
3-D9-029	Corridor	1	Corridor	28	18	Radiant Panels	Remote Sensor Adj.	No	None	None	0	0	n/a	None	43	n/a	200	n/a	None	A	80	Automatic Controls	Floor 0m
Switch Cupboard	Switch Cupboard	1	Switch Cupboard	Not Controlled	Not Controlled	None	None	No	None	None	0	0	n/a	None	n/a	n/a	100	n/a	None	A	80	Automatic Controls	Floor 0m
G-D10-001	Staff Room	1	Common room/staff room/lounge	28	18	Radiant Panels	Remote Sensor Adj.	Yes	Comfort Cooled Fresh Air	Central Supply and Extract	6	8	Negative	F7	43	41	300	n/a	None	A	80	Switch	Floor 0m
G-E1-001	Multi-Functional Activity Zone	1	Patient Accommodation Day	25	18	Underfloor Heating	BMS Adjustable Sensor	No	None	None	0	0	n/a	None	43	41	100	n/a	None	A	80	Switch	Bed / Trolley 1.45m
G-E1-002	RHSC OPD Reception	1	Reception	28	18	Underfloor Heating	BMS Adjustable Sensor	No	None	None	0	0	n/a	None	43	n/a	300	n/a	None	A	80	Automatic Controls	Desk 0.75 to 0.85m
G-E1-003	RHSC OPD Suite A Sub Waiting	1	Waiting Room	28	18	Radiant Panels	Remote Sensor Adj.	Yes	Comfort Cooled Fresh Air	Central Supply and Extract	2 people @ 10l/s per person	2 people @ 10l/s per person	Balanced	F7	43	n/a	300	n/a	None	A	80	Switch	Floor 0m
G-E1-004	Wheelchair Accessible	1	Toilet	28	18	Adjacent Space Transfer Air	None	No	None	Central Dirty Extract	0	10	Negative	None	n/a	41	200	n/a	None	A	80	Automatic Controls	Floor 0m
G-E1-005	Wheelchair Accessible	1	Toilet	28	18	Adjacent Space Transfer Air	None	No	None	Central Dirty Extract	0	10	Negative	None	n/a	41	200	n/a	None	A	80	Automatic Controls	Floor 0m
G-E1-006	WC Fully Accessible changing room	4	Toilet	28	18	Radiant Panels	Remote Sensor Adj.	No	None	Central Dirty Extract	0	10	Negative	None	43	41	200	n/a	None	A	80	Automatic Controls	Floor 0m
G-E1-007	Wheelchair Accessible	1	Toilet	28	18	Adjacent Space Transfer Air	None	No	None	Central Dirty Extract	0	10	Negative	None	n/a	41	200	n/a	None	A	80	Automatic Controls	Floor 0m
G-E1-008	DSR	1	DSR	28	18	Adjacent Space Transfer Air	None	No	None	Central Dirty Extract	0	6	Negative	None	n/a	60	100	n/a	None	A	80	Automatic Controls	Floor 0m
G-E1-009	WC - Ambulant	1	Toilet	28	18	Adjacent Space Transfer Air	None	No	None	Central Dirty Extract	0	10	Negative	None	n/a	41	200	n/a	None	A	80	Automatic Controls	Floor 0m
G-E1-010	Wheelchair Accessible	1	Toilet	28	18	Adjacent Space Transfer Air	None	No	None	Central Dirty Extract	0	10	Negative	None	n/a	41	200	n/a	None	A	80	Automatic Controls	Floor 0m
G-E1-011	RHSC OPD Main Waiting	1	Waiting Room	28	18	Underfloor Heating	BMS Adjustable Sensor	No	None	None	0	0	n/a	None	43	n/a	300	n/a	None	A	80	Switch	Floor 0m
G-E1-012	Switch Cupboard	1	Switch Cupboard	Not Controlled	Not Controlled	None	None	No	None	None	0	0	n/a	None	n/a	n/a	100	n/a	None	A	80	Automatic Controls	Floor 0m
G-E1-012A	Switch Cupboard	1	Switch Cupboard	Not Controlled	Not Controlled	None	None	No	None	None	0	0	n/a	None	n/a	n/a	100	n/a	None	A	80	Automatic Controls	Floor 0m
G-E1-012B	Manifold	1	Manifold	Not Controlled	Not Controlled	None	None	No	None	None	0	0	n/a	None	n/a	n/a	100	n/a	None	A	80	Automatic Controls	Floor 0m
G-T2-013	Manifold	1	Manifold	Not Controlled	Not Controlled	None	None	No	None	None	0	0	n/a	None	n/a	n/a	100	n/a	None	A	80	Automatic Controls	Floor 0m
G-F1-002	Consultant Psychiatrist / Psychologist Office	1	Cellular / Ward Offices	28	18	Radiant Panels	Remote Sensor Adj.	Yes	Ceiling Cassette - Chilled Water	Central Supply and Extract	6	4	Positive	F7	43	n/a	400	n/a	None	A	80	Switch	Desk 0.75 to 0.85m
G-F1-003	Storage (testing)	1	Storage Area Equipment	28	16	Adjacent Space Transfer Air	None	No	None	Central General Extract	0	3	Negative	None	n/a	n/a	200	n/a	None	A	80	Automatic Controls	Floor 0m
G-F1-004	Ward Manager Office	1	Cellular / Ward Offices	28	18	Radiant Panels	Remote Sensor Adj.	Yes	Ceiling Cassette - Chilled Water	Central Supply and Extract	6	4	Positive	F7	43	n/a	400	n/a	None	A	80	Switch	Desk 0.75 to 0.85m
G-F1-005	Interview Room	1	Meeting Room	25	18	Radiant Panels	Remote Sensor Adj.	Yes	Ceiling Cassette - Chilled Water	Central Supply and Extract	4 people at 10 l/s per person (6ach)	4 people at 10 l/s per person (6ach)	Balanced	F7	43	n/a	300	n/a	None	A	80	Switch	Desk 0.75 to 0.85m
G-F1-006	Reception	1	Reception	28	18	Radiant Panels	Remote Sensor Adj.	Yes	Ceiling Cassette - Chilled Water	Central Supply Air	2 people at 10 l/s per person (6ach)	0	Positive	F7	43	n/a	300	n/a	None	A	80	Switch	Desk 0.75 to 0.85m
G-F1-007	Interview Room	1	Meeting Room	25	18	Radiant Panels	Remote Sensor Adj.	Yes	Ceiling Cassette - Chilled Water	Central Supply and Extract	4 people at 10 l/s per person (6ach)	4 people at 10 l/s per person (6ach)	Balanced	F7	43	n/a	300	n/a	None	A	80	Switch	Desk 0.75 to 0.85m
G-F1-008	Interview Room	1	Meeting Room	25	18	Radiant Panels	Remote Sensor Adj.	Yes	Wall Mounted Unit	Central Supply and Extract	4 people at 10 l/s per person (6ach)	4 people at 10 l/s per person (6ach)	Balanced	F7	43	n/a	300	n/a	None	A	80	Switch	Desk 0.75 to 0.85m
G-F1-009	Interview Room	1	Meeting Room	25	18	Radiant Panels	Remote Sensor Adj.	Yes	Wall Mounted Unit	Central Supply and Extract	4 people at 10 l/s per person (6ach)	4 people at 10 l/s per person (6ach)	Balanced	F7	43	n/a	300	n/a	None	A	80	Switch	Desk 0.75 to 0.85m

Room No.	Room Name	Qty	Room Function	Temp (max)	Temp (min)	Heating Type	Heating Control	Cooling (present)	Cooling (type)	Ventilation (type)	Supply (ac/hr)	Extract (ac/hr)	Relative pressure	Min filtration	Surface temp	Water temp	Normal lux	Night lux	Local lux	Standby grade	Colour render	Control	Plane
G-F1-010	Dictation/ 1:1/Phone Booth	1	Cellular / Ward Offices	28	18	Radiant Panels	Remote Sensor Adj.	Yes	Wall Mounted Unit	Central Supply and Extract	2 people at 10 l/s per person (6ach)	2 people at 10 l/s per person (6ach)	Balanced	F7	43	n/a	400	n/a	None	A	80	Automatic Controls	Desk 0.75 to 0.85m
G-F1-011	Waiting Area	1	Waiting Room	28	18	Radiant Panels	Remote Sensor Adj.	Yes	Wall Mounted Unit	Central Supply and Extract	2 people at 10 l/s per person (6ach)	2 people at 10 l/s per person (6ach)	Balanced	F7	43	n/a	300	n/a	None	A	80	Automatic Controls	Floor 0m
G-F1-013	Storage / Photocopy	1	Storage Area Equipment	28	16	Adjacent Space Transfer Air	None	No	None	Central General Extract	0	3	Negative	None	n/a	n/a	200	n/a	None	A	80	Automatic Controls	Floor 0m
G-F1-014	Secretary/Filing Office	1	Cellular / Ward Offices	28	18	Radiant Panels	Remote Sensor Adj.	Yes	Ceiling Cassette - Chilled Water	Central Supply and Extract	4	3	Positive	F7	43	n/a	400	n/a	None	A	80	Switch	Desk 0.75 to 0.85m
G-F1-016	Multi-Disciplinary Office	1	Multi Disciplinary Work Areas	28	18	Radiant Panels	Remote Sensor Adj.	Yes	Ceiling Cassette - Chilled Water	Central Supply and Extract	6	4	Positive	F7	43	n/a	400	n/a	None	A	80	Switch	Desk 0.75 to 0.85m
G-F1-017	Shower / WC / WHB assisted	1	Bathroom	28	20	Radiant Panels	Remote Sensor Adj.	No	None	Central Dirty Extract	0	10	Negative	None	43	41	200	n/a	None	A	80	Switch	Floor 0m
G-F1-018	WC - Wheelchair accessible	1	Toilet	28	18	Adjacent Space Transfer Air	None	No	None	Central Dirty Extract	0	10	Negative	None	n/a	41	200	n/a	None	A	80	Automatic Controls	Floor 0m
G-F1-019	Play Room	1	Common room/staff room/lounge	28	18	Radiant Panels	Remote Sensor Adj.	Yes	Ceiling Cassette - Chilled Water	Central Supply and Extract	12 people at 10 l/s per person (8ach)	12 people at 10 l/s per person (8ach)	Balanced	F7	43	41	300	n/a	None	A	80	Switch	Floor 0m
G-F1-020	Group Room	1	Meeting Room	25	18	Radiant Panels	Remote Sensor Adj.	Yes	Ceiling Cassette - Chilled Water	Central Supply and Extract	13 people at 10 l/s per person (8ach)	13 people at 10 l/s per person (8ach)	Balanced	F7	43	n/a	300	n/a	None	A	80	Switch	Desk 0.75 to 0.85m
G-F1-021	Control / Viewing	1	Diagnostic room	25	18	Radiant Panels	Remote Sensor Adj.	Yes	Ceiling Cassette - Chilled Water	Central Supply and Extract	5 people at 10 l/s per person (7ach)	5 people at 10 l/s per person (7ach)	Balanced	F7	43	n/a	300	n/a	1000	A	80	Switch / Dimmer	General working plane 1m
G-F1-022	Time Out Room	1	Common room/staff room/lounge	28	18	Radiant Panels	Remote Sensor Adj.	Yes	Comfort Cooled Fresh Air	Central Supply and Extract	4	4	Balanced	F7	43	41	300	n/a	None	A	80	Switch	Floor 0m
G-F1-023	Family Interview Room	1	Meeting Room	25	18	Radiant Panels	Remote Sensor Adj.	Yes	Ceiling Cassette - Chilled Water	Central Supply and Extract	8 people at 10 l/s per person (10ach)	8 people at 10 l/s per person (10ach)	Balanced	F7	43	n/a	300	n/a	None	A	80	Switch	Desk 0.75 to 0.85m
G-F1-024	Large Group Room	1	Meeting Room	25	18	Radiant Panels	Remote Sensor Adj.	Yes	Ceiling Cassette - Chilled Water	Central Supply and Extract	13 people at 10 l/s per person (6ach)	13 people at 10 l/s per person (6ach)	Balanced	F7	43	n/a	300	n/a	None	A	80	Switch	Desk 0.75 to 0.85m
G-F1-026	Large Family Interview Room	1	Meeting Room	25	18	Radiant Panels	Remote Sensor Adj.	Yes	Ceiling Cassette - Chilled Water	Central Supply and Extract	8 people at 10 l/s per person (6ach)	8 people at 10 l/s per person (6ach)	Balanced	F7	43	n/a	300	n/a	None	A	80	Switch	Desk 0.75 to 0.85m
G-F1-027	Sitting Room	1	Common room/staff room/lounge	28	18	Radiant Panels	Remote Sensor Adj.	Yes	Comfort Cooled Fresh Air	Central Supply and Extract	6	8	Negative	F7	43	41	300	n/a	None	A	80	Switch	Floor 0m
G-F1-028	Multi-Disciplinary Office	1	Multi Disciplinary Work Areas	28	18	Radiant Panels	Remote Sensor Adj.	Yes	Comfort Cooled Fresh Air	Central Supply and Extract	6	4	Positive	F7	43	n/a	400	n/a	None	A	80	Switch	Desk 0.75 to 0.85m
G-F1-030	Multi-Disciplinary Office	1	Multi Disciplinary Work Areas	28	18	Radiant Panels	Remote Sensor Adj.	Yes	Comfort Cooled Fresh Air	Central Supply and Extract	6	4	Positive	F7	43	n/a	400	n/a	None	A	80	Switch	Desk 0.75 to 0.85m
G-F1-031	Sitting Room	1	Common room/staff room/lounge	28	18	Radiant Panels	Remote Sensor Adj.	Yes	Comfort Cooled Fresh Air	Central Supply and Extract	8 people at 10 l/s per person (10ach)	8 people at 10 l/s per person (10ach)	Balanced	F7	43	n/a	300	n/a	None	A	80	Switch	Floor 0m
G-F1-032	Group Room	1	Common room/staff room/lounge	28	18	Radiant Panels	Remote Sensor Adj.	Yes	Ceiling Cassette - Chilled Water	Central Supply and Extract	10 people at 10 l/s per person (10ach)	10 people at 10 l/s per person (10ach)	Balanced	F7	43	n/a	300	n/a	None	A	80	Switch	Floor 0m
G-F1-033	Art Room	1	Classroom	28	18	Radiant Panels	Remote Sensor Adj.	Yes	Comfort Cooled Fresh Air	Central Supply and Extract	15 people at 10 l/s per person (9ach)	15 people at 10 l/s per person (9ach)	Balanced	F7	43	41	300	n/a	None	A	80	Switch	Desk 0.75 to 0.85m
G-F1-034	Therapy / Play Therapy Room	1	Common room/staff room/lounge	28	18	Radiant Panels	Remote Sensor Adj.	Yes	Comfort Cooled Fresh Air	Central Supply and Extract	6	8	Negative	F7	43	41	300	n/a	None	A	80	Switch	Floor 0m
G-F1-036	Dining Room (Inpatients & Day Prog)	1	Eating/Drinking	28	18	Radiant Panels	Remote Sensor Adj.	Yes	Comfort Cooled Fresh Air	Central Supply and Extract	4	4	Balanced	F7	43	41	300	n/a	None	A	80	Switch	Floor 0m
G-F1-037	Therapeutic Kitchen	1	Ward Kitchen	28	18	Radiant Panels	Remote Sensor Adj.	Yes	Ceiling Cassette - Chilled Water	Central General Extract	0	6	Negative	None	43	41	500	n/a	None	A	80	Switch	General working plane 1m
G-F1-038	WC - Wheelchair accessible	1	Toilet	28	18	Adjacent Space Transfer Air	None	No	None	Central Dirty Extract	0	10	Negative	None	n/a	41	200	n/a	None	A	80	Automatic Controls	Floor 0m
G-F1-039	Ward kitchen	1	Ward Kitchen	28	18	Adjacent Space Transfer Air	None	No	None	Central General Extract	0	6	Negative	None	n/a	60	500	n/a	None	A	80	Switch	General working plane 1m
G-F1-040	WC - Wheelchair accessible	1	Toilet	28	18	Adjacent Space Transfer Air	None	No	None	Central Dirty Extract	0	10	Negative	None	n/a	41	200	n/a	None	A	80	Automatic Controls	Floor 0m
G-F1-041	Waiting Area	1	Waiting Room	28	18	Radiant Panels	Remote Sensor Adj.	Yes	Ceiling Cassette - Chilled Water	Central Supply and Extract	10 people at 10 l/s per person (10ach)	10 people at 10 l/s per person (10ach)	Balanced	F7	43	n/a	300	n/a	None	A	80	Automatic Controls	Floor 0m
G-F1-042	DSR	1	DSR	28	18	Adjacent Space Transfer Air	None	No	None	Central Dirty Extract	0	6	Negative	None	n/a	60	100	n/a	None	A	80	Automatic Controls	Floor 0m
G-F1-043	WC - Staff	1	Toilet	28	18	Adjacent Space Transfer Air	None	No	None	Central Dirty Extract	0	10	Negative	None	n/a	41	200	n/a	None	A	80	Automatic Controls	Floor 0m
G-F1-044	Dictation/ 1:1/Phone Booth	1	Cellular / Ward Offices	28	18	Radiant Panels	Remote Sensor Adj.	Yes	Wall Mounted Unit	Central Supply and Extract	2 people at 10 l/s per person (10ach)	2 people at 10 l/s per person (10ach)	Balanced	F7	43	n/a	400	n/a	None	A	80	Automatic Controls	Desk 0.75 to 0.85m
G-F1-045	Multidisciplinary Office - ITS	1	Multi Disciplinary Work Areas	28	18	Radiant Panels	Remote Sensor Adj.	Yes	Ceiling Cassette - Chilled Water	Central Supply and Extract	6	4	Positive	F7	43	n/a	400	n/a	None	A	80	Switch	Desk 0.75 to 0.85m
G-F1-047	Recreation Room	1	Common room/staff room/lounge	28	18	Radiant Panels	Remote Sensor Adj.	Yes	Comfort Cooled Fresh Air	Central Supply and Extract	5	6	Negative	F7	43	41	300	n/a	None	A	80	Switch	Floor 0m
G-F1-048	Group Room	1	Meeting Room	25	18	Radiant Panels	Remote Sensor Adj.	Yes	Comfort Cooled Fresh Air	Central Supply and Extract	6	8	Negative	F7	43	n/a	300	n/a	None	A	80	Switch	Desk 0.75 to 0.85m
G-F1-049	Dictation/ 1:1/Phone Booth	1	Cellular / Ward Offices	28	18	Radiant Panels	Remote Sensor Adj.	Yes	Wall Mounted Unit	Central Supply and Extract	2 people at 10 l/s per person (10ach)	2 people at 10 l/s per person (10ach)	Balanced	F7	43	n/a	400	n/a	None	A	80	Automatic Controls	Desk 0.75 to 0.85m
G-F1-050	Physical Measurement	1	Consulting Room	25	18	Radiant Panels	Remote Sensor Adj.	Yes	Comfort Cooled Fresh Air	Central Supply and Extract	6	3	Positive	F7	43	41	300	n/a	1000	A	80	Switch	Bed / Trolley 1.45m
G-F1-051	Treatment Room	1	Treatment Room	25	18	Radiant Panels	Remote Sensor Adj.	Yes	Comfort Cooled Fresh Air	Central Supply Air	10	0	Positive	F7	43	41	500	n/a	1000	A	90	Switch	Bed / Trolley 1.45m
G-F1-052	Drug Room	1	Drug Room	28	18	Radiant Panels	Remote Sensor Adj.	Yes	Comfort Cooled Fresh Air	Central Supply Air	6	0	Positive	F7	43	41	150	n/a	None	A	80	Automatic Controls	General working plane 1m
G-F1-053	Multi-Disciplinary Office	1	Multi Disciplinary Work Areas	28	18	Radiant Panels	Remote Sensor Adj.	Yes	Ceiling Cassette - Chilled Water	Central Supply and Extract	6	4	Positive	F7	43	n/a	400	n/a	None	A	80	Switch	Desk 0.75 to 0.85m
G-F1-054	Laundry Room	1	Laundry	28	18	Adjacent Space Transfer Air	None	Yes	Wall Mounted Unit	Central Supply and Extract	6	10	Negative	F7	n/a	60	300	n/a	None	A	80	Switch	Floor 0m
G-F1-056	Open Space	1	Waiting Room	28	18	Radiant Panels	Remote Sensor Adj.	Yes	Ceiling Cassette - Chilled Water	Central Supply and Extract	5	5	Balanced	F7	43	n/a	300	n/a	None	A	80	Switch	Floor 0m
G-F1-057	Pantry	1	Pantry	28	18	Radiant Panels	Remote Sensor Adj.	Yes	Comfort Cooled Fresh Air	Central Supply and Extract	6	8	Negative	F7	43	41	300	n/a	None	A	80	Switch	Floor 0m
G-F1-058	WC - Staff	1	Toilet	28	18	Adjacent Space Transfer Air	None	No	None	Central Dirty Extract	0	10	Negative	None	n/a	41	200	n/a	None	A	80	Automatic Controls	Floor 0m

Room No.	Room Name	Qty	Room Function	Temp (max)	Temp (min)	Heating Type	Heating Control	Cooling (present)	Cooling (type)	Ventilation (type)	Supply (ac/hr)	Extract (ac/hr)	Relative pressure	Min filtration	Surface temp	Water temp	Normal lux	Night lux	Local lux	Standby grade	Colour render	Control	Plane
G-F1-059	Dirty Utility	1	Dirty utility	28	18	Adjacent Space Transfer Air	None	No	None	Central Dirty Extract	0	6	Negative	None	n/a	41	200	n/a	None	A	80	Automatic Controls	Floor 0m
G-F1-061	Disposal Hold	1	Disposal Hold	28	16	Adjacent Space Transfer Air	None	No	None	Central Dirty Extract	0	6	Negative	None	n/a	n/a	200	n/a	None	A	80	Automatic Controls	Floor 0m
G-F1-062	Clinical Base - Open Plan Area	1	Reception	28	18	Radiant Panels	Remote Sensor Adj.	Yes	Comfort Cooled Fresh Air	Central Supply and Extract	2 people at 10 l/s per person (6ach)	2 people at 10 l/s per person (6ach)	Balanced	F7	43	n/a	300	n/a	None	A	80	Switch	Desk 0.75 to 0.85m
G-F1-065	Quiet Zone	1	Common room/staff room/lounge	28	18	Radiant Panels	Remote Sensor Adj.	Yes	Comfort Cooled Fresh Air	Central Supply and Extract	6	8	Negative	F7	43	41	300	n/a	None	A	80	Switch	Floor 0m
G-F1-067	Single Bed Room	1	Bedroom	28	18	Radiant Panels	Remote Sensor Adj.	Yes	Comfort Cooled Fresh Air	Central Supply and Extract	6	6 via bedroom & ensuite	Balanced	F7	43	n/a	100	5	300	A	80	Switch / Dimmer	Bed / Trolley 1.45m
G-F1-068	En-suite wheelchair-accessible WC, Shower & wash	1	Bathroom	28	20	Adjacent Space Transfer Air	None	No	None	Central Dirty Extract	0	10	Negative	None	n/a	41	200	n/a	None	A	80	Automatic Controls	Floor 0m
G-F1-069	Single Bed Room	1	Bedroom	28	18	Radiant Panels	Remote Sensor Adj.	Yes	Comfort Cooled Fresh Air	Central Supply and Extract	6	6 via bedroom & ensuite	Balanced	F7	43	n/a	100	5	300	A	80	Switch / Dimmer	Bed / Trolley 1.45m
G-F1-070	En-suite wheelchair-accessible WC, Shower & wash	1	Bathroom	28	20	Adjacent Space Transfer Air	None	No	None	Central Dirty Extract	0	10	Negative	None	n/a	41	200	n/a	None	A	80	Automatic Controls	Floor 0m
G-F1-071	Single Bed Room	1	Bedroom	28	18	Radiant Panels	Remote Sensor Adj.	Yes	Comfort Cooled Fresh Air	Central Supply and Extract	6	6 via bedroom & ensuite	Balanced	F7	43	n/a	100	5	300	A	80	Switch / Dimmer	Bed / Trolley 1.45m
G-F1-072	En-suite wheelchair-accessible WC, Shower & wash	1	Bathroom	28	20	Adjacent Space Transfer Air	None	No	None	Central Dirty Extract	0	10	Negative	None	n/a	41	200	n/a	None	A	80	Automatic Controls	Floor 0m
G-F1-073	Single Bed Room	1	Bedroom	28	18	Radiant Panels	Remote Sensor Adj.	Yes	Comfort Cooled Fresh Air	Central Supply and Extract	6	6 via bedroom & ensuite	Balanced	F7	43	n/a	100	5	300	A	80	Switch / Dimmer	Bed / Trolley 1.45m
G-F1-074	En-suite wheelchair-accessible WC, Shower & wash	1	Bathroom	28	20	Adjacent Space Transfer Air	None	No	None	Central Dirty Extract	0	10	Negative	None	n/a	41	200	n/a	None	A	80	Automatic Controls	Floor 0m
G-F1-075	Single Bed Room	1	Bedroom	28	18	Radiant Panels	Remote Sensor Adj.	Yes	Comfort Cooled Fresh Air	Central Supply and Extract	6	6 via bedroom & ensuite	Balanced	F7	43	n/a	100	5	300	A	80	Switch / Dimmer	Bed / Trolley 1.45m
G-F1-076	En-suite wheelchair-accessible WC, Shower & wash	1	Bathroom	28	20	Adjacent Space Transfer Air	None	No	None	Central Dirty Extract	0	10	Negative	None	n/a	41	200	n/a	None	A	80	Automatic Controls	Floor 0m
G-F1-077	Single Bed Room	1	Bedroom	28	18	Radiant Panels	Remote Sensor Adj.	Yes	Comfort Cooled Fresh Air	Central Supply and Extract	6	6 via bedroom & ensuite	Balanced	F7	43	n/a	100	5	300	A	80	Switch / Dimmer	Bed / Trolley 1.45m
G-F1-078	En-suite wheelchair-accessible WC, Shower & wash	1	Bathroom	28	20	Adjacent Space Transfer Air	None	No	None	Central Dirty Extract	0	10	Negative	None	n/a	41	200	n/a	None	A	80	Automatic Controls	Floor 0m
G-F1-079	Single Bed Room	1	Bedroom	28	18	Radiant Panels	Remote Sensor Adj.	Yes	Comfort Cooled Fresh Air	Central Supply and Extract	6	6 via bedroom & ensuite	Balanced	F7	43	n/a	100	5	300	A	80	Switch / Dimmer	Bed / Trolley 1.45m
G-F1-080	En-suite wheelchair-accessible WC, Shower & wash	1	Bathroom	28	20	Adjacent Space Transfer Air	None	No	None	Central Dirty Extract	0	10	Negative	None	n/a	41	200	n/a	None	A	80	Automatic Controls	Floor 0m
G-F1-081	Single Bed Room	1	Bedroom	28	18	Radiant Panels	Remote Sensor Adj.	Yes	Comfort Cooled Fresh Air	Central Supply and Extract	6	6 via bedroom & ensuite	Balanced	F7	43	n/a	100	5	300	A	80	Switch / Dimmer	Bed / Trolley 1.45m
G-F1-082	En-suite wheelchair-accessible WC, Shower & wash	1	Bathroom	28	20	Adjacent Space Transfer Air	None	No	None	Central Dirty Extract	0	10	Negative	None	n/a	41	200	n/a	None	A	80	Automatic Controls	Floor 0m
G-F1-083	Single Bed Room	1	Bedroom	28	18	Radiant Panels	Remote Sensor Adj.	Yes	Comfort Cooled Fresh Air	Central Supply and Extract	6	6 via bedroom & ensuite	Balanced	F7	43	n/a	100	5	300	A	80	Switch / Dimmer	Bed / Trolley 1.45m
G-F1-084	En-suite wheelchair-accessible WC, Shower & wash	1	Bathroom	28	20	Adjacent Space Transfer Air	None	No	None	Central Dirty Extract	0	10	Negative	None	n/a	41	200	n/a	None	A	80	Automatic Controls	Floor 0m
G-F1-085	Single Bed Room	1	Bedroom	28	18	Radiant Panels	Remote Sensor Adj.	Yes	Comfort Cooled Fresh Air	Central Supply and Extract	6	6 via bedroom & ensuite	Balanced	F7	43	n/a	100	5	300	A	80	Switch / Dimmer	Bed / Trolley 1.45m
G-F1-086	En-suite wheelchair-accessible WC, Shower & wash	1	Bathroom	28	20	Adjacent Space Transfer Air	None	No	None	Central Dirty Extract	0	10	Negative	None	n/a	41	200	n/a	None	A	80	Automatic Controls	Floor 0m
G-F1-087	Single Bed Room (large)	1	Bedroom	28	18	Radiant Panels	Remote Sensor Adj.	Yes	Comfort Cooled Fresh Air	Central Supply and Extract	6	6 via bedroom & ensuite	Balanced	F7	43	n/a	100	5	300	A	80	Switch / Dimmer	Bed / Trolley 1.45m
G-F1-088	En-suite wheelchair-accessible WC, Shower & wash	1	Bathroom	28	20	Adjacent Space Transfer Air	None	No	None	Central Dirty Extract	0	10	Negative	None	n/a	41	200	n/a	None	A	80	Automatic Controls	Floor 0m
G-F1-089	Linen Bay	1	Linen Bay	28	16	Adjacent Space Transfer Air	None	No	None	None	0	0	n/a	None	n/a	n/a	100 (KNX)	n/a	None	A	80	Automatic Controls	Floor 0m
G-F1-090	Single Bed Room (large)	1	Bedroom	28	18	Radiant Panels	Remote Sensor Adj.	Yes	Comfort Cooled Fresh Air	Central Supply and Extract	6	6 via bedroom & ensuite	Balanced	F7	43	n/a	100	5	300	A	80	Switch / Dimmer	Bed / Trolley 1.45m
G-F1-091	En-suite wheelchair-accessible WC, Shower & wash	1	Bathroom	28	20	Adjacent Space Transfer Air	None	No	None	Central Dirty Extract	0	10	Negative	None	n/a	41	200	n/a	None	A	80	Automatic Controls	Floor 0m
G-F1-092	Quiet Room	1	Cellular / Ward Offices	28	18	Radiant Panels	Remote Sensor Adj.	Yes	Comfort Cooled Fresh Air	Central Supply and Extract	4 people at 10 l/s per person (4ach)	4 people at 10 l/s per person (4ach)	Balanced	F7	43	n/a	400	n/a	None	A	80	Automatic Controls	Desk 0.75 to 0.85m
G-F1-096	Store	1	Storage Area Equipment	28	16	Adjacent Space Transfer Air	None	No	None	Central General Extract	0	3	Negative	None	n/a	n/a	200	n/a	None	A	80	Automatic Controls	Floor 0m
G-F1-101	Seclusion Room	1	Seclusion Room	28	18	Radiant Panels	Remote Sensor Adj.	Yes	Comfort Cooled Fresh Air	Central Supply Air	3	0	Positive	F7	43	n/a	300	n/a	None	A	80	Automatic Controls	Floor 0m
G-F1-001	Corridor	1	Corridor	28	18	Radiant Panels	Remote Sensor Adj.	No	None	None	0	0	n/a	None	43	n/a	200	n/a	None	A	80	Automatic Controls	Floor 0m
G-F1-015	Corridor	1	Corridor	28	18	Radiant Panels	Remote Sensor Adj.	No	None	None	0	0	n/a	None	43	n/a	200	n/a	None	A	80	Automatic Controls	Floor 0m
G-F1-025	Corridor	1	Corridor	28	18	Radiant Panels	Remote Sensor Adj.	No	None	None	0	0	n/a	None	43	n/a	200	n/a	None	A	80	Automatic Controls	Floor 0m
G-F1-029	Corridor	1	Corridor	28	18	Radiant Panels	Remote Sensor Adj.	No	None	None	0	0	n/a	None	43	n/a	200	n/a	None	A	80	Automatic Controls	Floor 0m
G-F1-035	Corridor	1	Corridor	28	18	Adjacent Space Transfer	None	No	None	None	0	0	n/a	None	n/a	n/a	200	n/a	None	A	80	Automatic Controls	Floor 0m
G-F1-046	Corridor	1	Corridor	28	18	Adjacent Space Transfer	None	No	None	None	0	0	n/a	None	n/a	n/a	200	n/a	None	A	80	Automatic Controls	Floor 0m
G-F1-055	Corridor	1	Corridor	28	18	Adjacent Space Transfer	None	No	None	None	0	0	n/a	None	n/a	n/a	200	n/a	None	A	80	Automatic Controls	Floor 0m
G-F1-060	Corridor	1	Corridor	28	18	Radiant Panels	Remote Sensor Adj.	No	None	None	0	0	n/a	None	43	n/a	200	n/a	None	A	80	Automatic Controls	Floor 0m
G-F1-066	Corridor	1	Corridor	28	18	Adjacent Space Transfer	None	No	None	None	0	0	n/a	None	n/a	n/a	200	n/a	None	A	80	Automatic Controls	Floor 0m
G-F1-093	Corridor	1	Corridor	28	18	Radiant Panels	Remote Sensor Adj.	No	None	None	0	0	n/a	None	43	n/a	200	n/a	None	A	80	Automatic Controls	Floor 0m
G-F1-097	Corridor	1	Corridor	28	18	Adjacent Space Transfer	None	No	None	None	0	0	n/a	None	n/a	n/a	200	n/a	None	A	80	Automatic Controls	Floor 0m
G-F1-098	Corridor	1	Corridor	28	18	Adjacent Space Transfer	None	No	None	None	0	0	n/a	None	n/a	n/a	200	n/a	None	A	80	Automatic Controls	Floor 0m

Room No.	Room Name	Qty	Room Function	Temp (max)	Temp (min)	Heating Type	Heating Control	Cooling (present)	Cooling (type)	Ventilation (type)	Supply (ac/hr)	Extract (ac/hr)	Relative pressure	Min filtration	Surface temp	Water temp	Normal lux	Night lux	Local lux	Standby grade	Colour render	Control	Plane
G-F1-100	Lobby	1	Lobby	28	18	Adjacent Space Transfer	None	No	None	None	0	0	n/a	None	n/a	n/a	200	n/a	None	A	80	Automatic Controls	Floor 0m
G-F1-094	Switch Cupboard	1	Switch Cupboard	Not Controlled	Not Controlled	None	None	No	None	None	0	0	n/a	None	n/a	n/a	100	n/a	None	A	80	Automatic Controls	Floor 0m
G-F1-095	Switch Cupboard	1	Switch Cupboard	Not Controlled	Not Controlled	None	None	No	None	None	0	0	n/a	None	n/a	n/a	100	n/a	None	A	80	Automatic Controls	Floor 0m
G-F1-102	E-S Duct 1	1	E-S Duct 1	Not Controlled	Not Controlled	None	None	No	None	None	0	0	n/a	None	n/a	n/a	100	n/a	None	A	80	Automatic Controls	Floor 0m
G-F1-103	E-S Duct 2	1	E-S Duct 2	Not Controlled	Not Controlled	None	None	No	None	None	0	0	n/a	None	n/a	n/a	100	n/a	None	A	80	Automatic Controls	Floor 0m
G-F1-104	E-S Duct 3	1	E-S Duct 3	Not Controlled	Not Controlled	None	None	No	None	None	0	0	n/a	None	n/a	n/a	100	n/a	None	A	80	Automatic Controls	Floor 0m
G-F1-105	E-S Duct 4	1	E-S Duct 4	Not Controlled	Not Controlled	None	None	No	None	None	0	0	n/a	None	n/a	n/a	100	n/a	None	A	80	Automatic Controls	Floor 0m
G-F1-106	E-S Duct 5	1	E-S Duct 5	Not Controlled	Not Controlled	None	None	No	None	None	0	0	n/a	None	n/a	n/a	100	n/a	None	A	80	Automatic Controls	Floor 0m
G-F1-107	E-S Duct 6	1	E-S Duct 6	Not Controlled	Not Controlled	None	None	No	None	None	0	0	n/a	None	n/a	n/a	100	n/a	None	A	80	Automatic Controls	Floor 0m
G-F1-108	E-S Duct 7	1	E-S Duct 7	Not Controlled	Not Controlled	None	None	No	None	None	0	0	n/a	None	n/a	n/a	100	n/a	None	A	80	Automatic Controls	Floor 0m
G-F1-109	E-S Duct 8	1	E-S Duct 8	Not Controlled	Not Controlled	None	None	No	None	None	0	0	n/a	None	n/a	n/a	100	n/a	None	A	80	Automatic Controls	Floor 0m
2-G2-002	DSR	1	DSR	28	18	Adjacent Space Transfer Air	None	No	None	Central Dirty Extract	0	6	Negative	None	n/a	60	100	n/a	None	A	80	Automatic Controls	Floor 0m
2-G2-003	Clean Equipment	1	Storage Area Equipment	28	16	Radiant Panels	Remote Sensor Adj.	No	None	Central General Extract	0	3	Negative	None	43	n/a	200	n/a	None	A	80	Automatic Controls	Floor 0m
2-G2-004	Dirty Equipment	1	Storage Area Equipment	28	16	Adjacent Space Transfer Air	None	No	None	Central General Extract	0	3	Negative	None	n/a	60	200	n/a	None	A	80	Automatic Controls	Floor 0m
2-G2-005	Disposal Hold	1	Disposal Hold	28	16	Adjacent Space Transfer Air	None	No	None	Central Dirty Extract	0	6	Negative	None	n/a	n/a	200	n/a	None	A	80	Automatic Controls	Floor 0m
2-G2-001	Corridor	1	Corridor	28	18	Radiant Panels	Remote Sensor Adj.	No	None	None	0	0	n/a	None	n/a	n/a	200	n/a	None	A	80	Automatic Controls	Floor 0m
1-G3-002	On-Call Bedroom	1	Bedroom	28	18	Radiant Panels	Remote Sensor Adj.	Yes	Comfort Cooled Fresh Air	Natural & Central Supply Air	4	via ensuite	Balanced	F7	43	n/a	100	n/a	None	A	80	Switch / Dimmer	Bed / Trolley 1.45m
1-G3-003	En-suite Shower / WC / WHB	1	Bathroom	28	18	Radiant Panels	None	No	None	Central Dirty Extract	0	Minimum 10	Negative	None	43	41	200	n/a	None	A	80	Automatic Controls	Floor 0m
1-G3-004	On-Call Bedroom	1	Bedroom	28	18	Radiant Panels	Remote Sensor Adj.	Yes	Comfort Cooled Fresh Air	Natural & Central Supply Air	4	via ensuite	Balanced	F7	43	n/a	100	n/a	None	A	80	Switch / Dimmer	Bed / Trolley 1.45m
1-G3-005	En-suite Shower / WC / WHB	1	Bathroom	28	18	Radiant Panels	None	No	None	Central Dirty Extract	0	Minimum 10	Negative	None	43	41	200	n/a	None	A	80	Automatic Controls	Floor 0m
1-G3-006	On-Call Bedroom	1	Bedroom	28	18	Radiant Panels	Remote Sensor Adj.	Yes	Comfort Cooled Fresh Air	Natural & Central Supply Air	4	via ensuite	Balanced	F7	43	n/a	100	n/a	None	A	80	Switch / Dimmer	Bed / Trolley 1.45m
1-G3-007	En-suite Shower / WC / WHB	1	Bathroom	28	18	Radiant Panels	None	No	None	Central Dirty Extract	0	Minimum 10	Negative	None	43	41	200	n/a	None	A	80	Automatic Controls	Floor 0m
1-G3-008	Mini Kitchen	1	Eating/Drinking	28	18	Adjacent Space Transfer Air	None	Yes	Comfort Cooled Fresh Air	Central General Extract	0	5	Negative	None	n/a	41	300	n/a	None	A	80	Switch	Floor 0m
1-G3-009	DSR	1	DSR	28	18	Adjacent Space Transfer Air	None	No	None	Central Dirty Extract	0	6	Negative	None	n/a	60	100	n/a	None	A	80	Automatic Controls	Floor 0m
1-G3-001	Corridor	1	Corridor	28	18	Radiant Panels	Remote Sensor Adj.	No	None	None	0	0	n/a	None	43	n/a	200	n/a	None	A	80	Automatic Controls	Floor 0m
4-H1-002	Conference / Meeting Room	1	Meeting Room	25	18	Radiant Panels	Remote Sensor Adj.	Yes	Ceiling Cassette - Chilled Water	Central Supply and Extract	15 people at 10 l/s per person (8ach)	15 people at 10 l/s per person (8ach)	Balanced	F7	43	n/a	300	n/a	None	A	80	Switch	Desk 0.75 to 0.85m
4-H1-003	Seminar / Tutorial Room	1	Classroom	28	18	Radiant Panels	Remote Sensor Adj.	Yes	Ceiling Cassette - Chilled Water	Central Supply and Extract	36 people at 10 l/s per person (12ach)	36 people at 10 l/s per person (12ach)	Balanced	F7	43	n/a	300	n/a	None	A	80	Switch	Desk 0.75 to 0.85m
4-H1-004	Seminar / Tutorial Room	1	Classroom	28	18	Radiant Panels	Remote Sensor Adj.	Yes	Ceiling Cassette - Chilled Water	Central Supply and Extract	32 people at 10 l/s per person (10ach)	32 people at 10 l/s per person (10ach)	Balanced	F7	43	n/a	300	n/a	None	A	80	Switch	Desk 0.75 to 0.85m
4-H1-005	WC - Accessible	1	Toilet	28	18	Adjacent Space Transfer Air	None	No	None	Central Dirty Extract	0	10	Negative	None	n/a	41	200	n/a	None	A	80	Automatic Controls	Floor 0m
4-H1-006	Disposal Hold	1	Disposal Hold	28	16	Adjacent Space Transfer Air	None	No	None	Central Dirty Extract	0	6	Negative	None	n/a	n/a	200	n/a	None	A	80	Automatic Controls	Floor 0m
4-H1-007	Waiting Area	1	Waiting Room	28	18	Radiant Panels	Remote Sensor Adj.	Yes	Comfort Cooled Fresh Air	Central Supply and Extract	5	5	Balanced	F7	43	n/a	300	n/a	None	A	80	Switch	Floor 0m
4-H1-008	Lockers	1	Changing Facilities	28	18	Radiant Panels	Remote Sensor Adj.	Yes	Comfort Cooled Fresh Air	Central Supply and Extract	5	4	positive to wc	F7	43	n/a	100	n/a	None	A	80	Automatic Controls	Floor 0m
4-H1-009	WC - Ambulant	1	Toilet	28	18	Adjacent Space Transfer Air	None	No	None	Central Dirty Extract	0	10	Negative	None	n/a	41	200	n/a	None	A	80	Automatic Controls	Floor 0m
4-H1-010	WC - Ambulant	1	Toilet	28	18	Adjacent Space Transfer Air	None	No	None	Central Dirty Extract	0	10	Negative	None	n/a	41	200	n/a	None	A	80	Automatic Controls	Floor 0m
4-H1-011	DSR	1	DSR	28	18	Adjacent Space Transfer Air	None	No	None	Central Dirty Extract	0	6	Negative	None	n/a	60	100	n/a	None	A	80	Automatic Controls	Floor 0m
4-H1-012	16 Person Office	1	Open Plan Office	28	18	Radiant Panels	Remote Sensor Adj.	Yes	Comfort Cooled Fresh Air	Central Supply and Extract	4	3	Positive	F7	43	n/a	400	n/a	None	A	80	Switch	Desk 0.75 to 0.85m
4-H1-013	Admin Office	1	Cellular / Ward Offices	28	18	Radiant Panels	Remote Sensor Adj.	Yes	Comfort Cooled Fresh Air	Central Supply and Extract	4	3	Positive	F7	43	n/a	400	n/a	None	A	80	Switch	Desk 0.75 to 0.85m
4-H1-014	Beverage Bay	1	Tea Making	28	18	Adjacent Space Transfer	None	No	None	None	0	0	n/a	None	n/a	41	100 (KNX)	n/a	None	A	80	switch	Floor 0m
4-H1-015	Stationery / Photocopying	1	Cellular / Ward Offices	28	18	Adjacent Space Transfer Air	None	Yes	Comfort Cooled Fresh Air	Central Supply and Extract	4	3	Positive	F7	n/a	n/a	400	n/a	None	A	80	Automatic Controls	Desk 0.75 to 0.85m
4-H1-016	Tissue Culture Room	1	Laboratory	25	18	Radiant Panels	Remote Sensor Adj.	Yes	Ceiling Cassette - Chilled Water	Central Supply and Extract	6	6	Balanced	F7	43	60	500	n/a	None	A	80	Switch	General working plane 1m
4-H1-017	Meeting Room - 4 person	1	Meeting Room	25	18	Radiant Panels	Remote Sensor Adj.	Yes	Wall Mounted Unit	Central Supply and Extract	4 people at 10 l/s per person (8ach)	4 people at 10 l/s per person (8ach)	Balanced	F7	43	n/a	300	n/a	None	A	80	Switch	Desk 0.75 to 0.85m
4-H1-018	Molecular Biology Laboratory	1	Laboratory	25	18	Radiant Panels	Remote Sensor Adj.	Yes	Ceiling Cassette - Chilled Water	Central Supply and Extract	6	6	Balanced	F7	43	60	500	n/a	None	A	80	Switch	General working plane 1m
4-H1-019	WC - Ambulant	1	Toilet	28	18	Adjacent Space Transfer Air	None	No	None	Central Dirty Extract	0	10	Negative	None	n/a	41	200	n/a	None	A	80	Automatic Controls	Floor 0m
4-H1-020	WC - Ambulant	1	Toilet	28	18	Adjacent Space Transfer Air	None	No	None	Central Dirty Extract	0	10	Negative	None	n/a	41	200	n/a	None	A	80	Automatic Controls	Floor 0m
4-H1-021	Student Records Store	1	Storage Area Equipment	28	16	Radiant Panels	Remote Sensor Adj.	No	None	Central Supply and Extract	4	3	Positive	F7	43	n/a	200	n/a	None	A	80	Automatic Controls	Floor 0m
4-H1-022	Laboratory / Finance Manager's Office	1	Cellular / Ward Offices	28	18	Radiant Panels	Remote Sensor Adj.	Yes	Comfort Cooled Fresh Air	Central Supply and Extract	4	3	Positive	F7	43	n/a	400	n/a	None	A	80	Switch	Desk 0.75 to 0.85m
4-H1-024	Senior Academic Staff	1	Cellular / Ward Offices	28	18	Radiant Panels	Remote Sensor Adj.	Yes	Comfort Cooled Fresh Air	Central Supply and Extract	4	3	Positive	F7	43	n/a	400	n/a	None	A	80	Switch	Desk 0.75 to 0.85m
4-H1-025	Senior Academic Staff	1	Cellular / Ward Offices	28	18	Radiant Panels	Remote Sensor Adj.	Yes	Comfort Cooled Fresh Air	Central Supply and Extract	4	3	Positive	F7	43	n/a	400	n/a	None	A	80	Switch	Desk 0.75 to 0.85m
4-H1-026	Freezer Store	1	Storage Area Equipment	28	16	Adjacent Space Transfer Air	None	Yes	Wall Mounted Cassette	Central General Extract	0	3	Negative	None	n/a	n/a	200	n/a	None	A	80	Automatic Controls	Floor 0m

Room No.	Room Name	Qty	Room Function	Temp (max)	Temp (min)	Heating Type	Heating Control	Cooling (present)	Cooling (type)	Ventilation (type)	Supply (ac/hr)	Extract (ac/hr)	Relative pressure	Min filtration	Surface temp	Water temp	Normal lux	Night lux	Local lux	Standby grade	Colour render	Control	Plane
4-H1-027	Physiological Laboratory	1	Laboratory	25	18	Radiant Panels	Remote Sensor Adj.	Yes	Ceiling Cassette - Chilled Water	Central Supply and Extract	6	6	Balanced	F7	43	60	500	n/a	None	A	80	Switch	General working plane 1m
4-H1-028	Senior Academic Staff	1	Cellular / Ward Offices	28	18	Radiant Panels	Remote Sensor Adj.	Yes	Comfort Cooled Fresh Air	Central Supply and Extract	4	3	Positive	F7	43	n/a	400	n/a	None	A	80	Switch	Desk 0.75 to 0.85m
4-H1-029	Head of Department	1	Cellular / Ward Offices	28	18	Radiant Panels	Remote Sensor Adj.	Yes	Ceiling Cassette - Chilled Water	Central Supply and Extract	4	3	Positive	F7	43	n/a	400	n/a	None	A	80	Switch	Desk 0.75 to 0.85m
4-H1-030	Senior Academic Staff	1	Cellular / Ward Offices	28	18	Radiant Panels	Remote Sensor Adj.	Yes	Comfort Cooled Fresh Air	Central Supply and Extract	4	3	Positive	F7	43	n/a	400	n/a	None	A	80	Switch	Desk 0.75 to 0.85m
4-H1-031	Senior Academic Staff	1	Cellular / Ward Offices	28	18	Radiant Panels	Remote Sensor Adj.	Yes	Comfort Cooled Fresh Air	Central Supply and Extract	4	3	Positive	F7	43	n/a	400	n/a	None	A	80	Switch	Desk 0.75 to 0.85m
4-H1-032	Senior Academic Staff	1	Cellular / Ward Offices	28	18	Radiant Panels	Remote Sensor Adj.	Yes	Comfort Cooled Fresh Air	Central Supply and Extract	4	3	Positive	F7	43	n/a	400	n/a	None	A	80	Switch	Desk 0.75 to 0.85m
4-H1-033	WC - Accessible	1	Toilet	28	18	Adjacent Space Transfer Air	None	No	None	Central Dirty Extract	0	10	Negative	None	n/a	41	200	n/a	None	A	80	Automatic Controls	Floor 0m
4-H1-035	Stationery / Photocopying	1	Cellular / Ward Offices	28	18	Adjacent Space Transfer Air	None	Yes	Comfort Cooled Fresh Air	Central Supply and Extract	4	3	Positive	F7	n/a	n/a	400	n/a	None	A	80	Automatic Controls	Desk 0.75 to 0.85m
4-H1-036	Gas Store	1	Storage Area Med Gas	28	16	Adjacent Space Transfer Air	None	No	None	Central General Extract	0	3	Negative	None	n/a	n/a	200	n/a	None	A	80	Automatic Controls	Floor 0m
4-H1-001	Corridor	1	Corridor	28	18	Radiant Panels	Remote Sensor Adj.	No	None	None	0	0	n/a	None	43	n/a	200	n/a	None	A	80	Automatic Controls	Floor 0m
4-H1-023	Corridor	1	Corridor	28	18	Radiant Panels	Remote Sensor Adj.	No	None	None	0	0	n/a	None	43	n/a	200	n/a	None	A	80	Automatic Controls	Floor 0m
4-H1-034	Switch Cupboard	1	Switch Cupboard	Not Controlled	Not Controlled	None	None	No	None	None	0	0	n/a	None	n/a	n/a	100	n/a	None	A	80	Automatic Controls	Floor 0m
1-H2-001	Disposal Hold	1	Disposal Hold	28	16	Adjacent Space Transfer Air	None	No	None	Central Dirty Extract	0	6	Negative	None	n/a	n/a	200	n/a	None	A	80	Automatic Controls	Floor 0m
1-H2-002	Waiting Play Area	1	Waiting Room	28	18	Radiant Panels	Remote Sensor Adj.	Yes	Comfort Cooled Fresh Air	Central Supply and Extract	5	5	Balanced	F7	43	n/a	300	n/a	None	A	80	Switch	Floor 0m
1-H2-004	Reception	1	Reception	28	18	Radiant Panels	Remote Sensor Adj.	Yes	Comfort Cooled Fresh Air	Central Supply Air	3	0	Positive	F7	43	n/a	300	n/a	None	A	80	Switch	Desk 0.75 to 0.85m
1-H2-005	WC Accessible Patients	1	Toilet	28	18	Adjacent Space Transfer Air	None	No	None	Central Dirty Extract	0	10	Negative	None	n/a	41	200	n/a	None	A	80	Automatic Controls	Floor 0m
1-H2-006	DSR	1	DSR	28	18	Adjacent Space Transfer Air	None	No	None	Central Dirty Extract	0	6	Negative	None	n/a	60	100	n/a	None	A	80	Automatic Controls	Floor 0m
1-H2-007	Office - 4 person	1	Cellular / Ward Offices	28	18	Radiant Panels	Remote Sensor Adj.	Yes	Comfort Cooled Fresh Air	Central Supply and Extract	4	3	Positive	F7	43	n/a	400	n/a	None	A	80	Switch	Desk 0.75 to 0.85m
1-H2-008	Linen Bay	1	Linen Bay	28	16	Adjacent Space Transfer	None	No	None	None	0	0	n/a	None	n/a	n/a	100 (KNX)	n/a	None	A	80	Automatic Controls	Floor 0m
1-H2-009	Consult / Assessment	1	Consulting Room	25	18	Radiant Panels	Remote Sensor Adj.	Yes	Ceiling Cassette - Chilled Water	Central Supply and Extract	3	3	Balanced	F7	43	41	300	n/a	1000	A	80	Switch	Bed / Trolley 1.45m
1-H2-010	Consult/Examination	1	Consulting Room	25	18	Radiant Panels	Remote Sensor Adj.	Yes	Ceiling Cassette - Chilled Water	Central Supply and Extract	3	3	Balanced	F7	43	41	300	n/a	1000	A	80	Switch	Bed / Trolley 1.45m
1-H2-011	WC Staff	1	Toilet	28	18	Adjacent Space Transfer Air	None	No	None	Central Dirty Extract	0	10	Negative	None	n/a	41	200	n/a	None	A	80	Automatic Controls	Floor 0m
1-H2-012	Pantry	1	Pantry	28	18	Radiant Panels	Remote Sensor Adj.	Yes	Comfort Cooled Fresh Air	Central Supply and Extract	6	8	Negative	F7	43	41	300	n/a	None	A	80	Switch	Floor 0m
1-H2-013	Store - Equipment	1	Storage Area Equipment	25	16	Radiant Panels	Remote Sensor Adj.	Yes	Ceiling Cassette - Chilled Water	Central General Extract	0	3	Negative	None	43	n/a	200	n/a	None	A	80	Automatic Controls	Floor 0m
1-H2-014	Clinical Study Room	1	Consulting Room	25	18	Radiant Panels	Remote Sensor Adj.	Yes	Ceiling Cassette - Chilled Water	Central Supply and Extract	3	3	Balanced	F7	43	41	300	n/a	1000	A	80	Switch	Bed / Trolley 1.45m
1-H2-015	En-suite Shower / WC / WHB	1	Bathroom	28	20	Radiant Panels	Remote Sensor Adj.	No	None	Central Dirty Extract	0	10	Negative	None	43	41	200	n/a	None	A	80	Automatic Controls	Floor 0m
1-H2-016	Sample Processing	1	Diagnostic room	25	18	Radiant Panels	Remote Sensor Adj.	Yes	Ceiling Cassette - Chilled Water	Central Supply and Extract	8	8	Balanced	F7	43	41	300	n/a	1000	A	80	Switch / Dimmer	General working plane 1m
1-H2-017	Dirty Utility	1	Dirty utility	28	18	Adjacent Space Transfer Air	None	No	None	Central Dirty Extract	0	6	Negative	None	n/a	41	200	n/a	None	A	80	Automatic Controls	Floor 0m
1-H2-018	En-suite Shower / WC / WHB	1	Bathroom	28	20	Adjacent Space Transfer Air	None	No	None	Central Dirty Extract	0	39	Negative	None	n/a	41	200	n/a	None	A	80	Automatic Controls	Floor 0m
1-H2-020	Clean Utility	1	Clean Utility	25	18	Radiant Panels	Remote Sensor Adj.	Yes	Ceiling Cassette - Chilled Water	Central Supply Air	6	0	Positive	F7	43	41	150	n/a	None	A	80	Automatic Controls	General working plane 1m
1-H2-021	Isolation Bedroom	1	Isolation Bedroom	28	21	Adjacent Space Transfer Air	BMS Adjustable Sensor	Yes	Comfort Cooled Fresh Air	Supply Via Lobby	10	10 via the ensuite	Balanced	H14	n/a	41	100	5	300	A	80	Switch / Dimmer	Bed / Trolley 1.45m
1-H2-022	En-suite Shower / WC / WHB	1	Bathroom	28	20	Radiant Panels	Remote Sensor Adj.	No	None	Central Dirty Extract	0	Minimum 10	Negative	None	43	41	200	n/a	None	A	80	Automatic Controls	Floor 0m
1-H2-023	Isolation Bedroom Entrance Lobby	1	Isolation Lobby	28	21	Warm Air - Reheat Battery	Local / BMS Adjustable Sensor	Yes	Comfort Cooled Fresh Air	Central Supply	36	0	Positive	H14	n/a	41	200	n/a	None	A	80	Automatic Controls	Floor 0m
1-H2-024	Single Bed Room	1	Bedroom	28	18	Radiant Panels	Remote Sensor Adj.	Yes	Comfort Cooled Fresh Air	Natural & Central Supply Air	4	via ensuite	Balanced	H14	43	41	100	5	300	A	80	Switch / Dimmer	Bed / Trolley 1.45m
1-H2-028	Touch Down Base	1	staff base	28	18	Radiant Panels	Remote Sensor Adj.	Yes	Comfort Cooled Fresh Air	Central Supply Air	2 people at 10l/s/per person (12ach)	0	Positive	F7	43	n/a	200/300	n/a	1000	A	80	Switch / Dimmer	General working plane 1m
1-H2-019	Corridor	1	Corridor	28	18	Adjacent Space Transfer Air	None	No	None	None	0	0	n/a	None	n/a	n/a	200	n/a	None	A	80	Automatic Controls	Floor 0m
1-H2-026	Corridor	1	Corridor	28	18	Radiant Panels	Remote Sensor Adj.	No	None	None	0	0	n/a	None	43	n/a	200	n/a	None	A	80	Automatic Controls	Floor 0m
1-H2-029	Corridor	1	Corridor	28	18	Adjacent Space Transfer Air	None	No	None	None	0	0	n/a	None	n/a	n/a	200	n/a	None	A	80	Automatic Controls	Floor 0m
1-H2-027	Switch Cupboard	1	Switch Cupboard	Not Controlled	Not Controlled	None	None	No	None	None	0	0	n/a	None	n/a	n/a	100	n/a	None	A	80	Automatic Controls	Floor 0m
3-H3-001	Workshop / Tutorial Room	1	Classroom	28	18	Radiant Panels	Remote Sensor Adj.	Yes	Ceiling Cassette - Chilled Water	Central Supply and Extract	10 people at 10 l/s per person (7ach)	10 people at 10 l/s per person (7ach)	Balanced	F7	43	41	300	n/a	None	A	80	Switch	Desk 0.75 to 0.85m
3-H3-002	Control Room	1	Control Room	25	18	Radiant Panels	Remote Sensor Adj.	Yes	Comfort Cooled	Central Supply and Extract	3 people at 10 l/s per person (5ach)	3 people at 10 l/s per person (5ach)	Balanced	F7	43	n/a	300	n/a	1000	A	80	Switch / Dimmer	General working plane 1m
3-H3-003	Storage	1	Storage Area Equipment	28	16	Radiant Panels	Remote Sensor Adj.	No	None	Central General Extract	0	3	Negative	None	43	n/a	200	n/a	None	A	80	Automatic Controls	Floor 0m
3-H3-004	Workshop / Tutorial Room	1	Classroom	28	18	Radiant Panels	Remote Sensor Adj.	Yes	Ceiling Cassette - Chilled Water	Central Supply and Extract	10 people at 10 l/s per person (7ach)	10 people at 10 l/s per person (7ach)	Balanced	F7	43	41	300	n/a	None	A	80	Switch	Desk 0.75 to 0.85m
3-H3-005	Scenario Room	1	Meeting Room	25	18	Radiant Panels	Remote Sensor Adj.	Yes	Ceiling Cassette - Chilled Water	Central Supply and Extract	10 people at 10 l/s per person (7ach)	10 people at 10 l/s per person (7ach)	Balanced	F7	43	n/a	300	n/a	None	A	80	Switch	Desk 0.75 to 0.85m
3-H3-006	WC / WHB disabled	1	Toilet	28	18	Radiant Panels	Remote Sensor Adj.	No	None	Central Dirty Extract	0	10	Negative	None	43	41	200	n/a	None	A	80	Automatic Controls	Floor 0m
3-H3-007	WC Ambulant	1	Toilet	28	18	Adjacent Space Transfer Air	None	No	None	Central Dirty Extract	0	10	Negative	None	n/a	41	200	n/a	None	A	80	Automatic Controls	Floor 0m
3-H3-008	WC Ambulant	1	Toilet	28	18	Adjacent Space Transfer Air	None	No	None	Central Dirty Extract	0	10	Negative	None	n/a	41	200	n/a	None	A	80	Automatic Controls	Floor 0m

Room No.	Room Name	Qty	Room Function	Temp (max)	Temp (min)	Heating Type	Heating Control	Cooling (present)	Cooling (type)	Ventilation (type)	Supply (ac/hr)	Extract (ac/hr)	Relative pressure	Min filtration	Surface temp	Water temp	Normal lux	Night lux	Local lux	Standby grade	Colour render	Control	Plane
3-H3-010	Workshop / Tutorial Room	1	Classroom	28	18	Radiant Panels	Remote Sensor Adj.	Yes	Ceiling Cassette - Chilled Water	Central Supply and Extract	10 people at 10 l/s per person (7ach)	10 people at 10 l/s per person (7ach)	Balanced	F7	43	41	300	n/a	None	A	80	Switch	Desk 0.75 to 0.85m
3-H3-011	Beverage Bay	1	Tea Making	28	18	Adjacent Space Transfer Air	None	No	None	None	0	0	n/a	None	n/a	41	100 (KNX)	n/a	None	A	80	switch	Floor 0m
3-H3-012	DSR	1	DSR	28	18	Adjacent Space Transfer Air	None	No	None	Central Dirty Extract	0	6	Negative	None	n/a	60	100	n/a	None	A	80	Automatic Controls	Floor 0m
3-H3-013	Manual Handling, Health & Safety	1	Classroom	28	18	Radiant Panels	Remote Sensor Adj.	Yes	Ceiling Cassette - Chilled Water	Central Supply and Extract	6	4	Positive	F7	43	n/a	300	n/a	None	A	80	Switch	Desk 0.75 to 0.85m
3-H3-014	Practice Based Educators Office	1	Cellular / Ward Offices	28	18	Radiant Panels	Remote Sensor Adj.	Yes	Comfort Cooled Fresh Air	Central Supply and Extract	6	4	Positive	F7	43	n/a	400	n/a	None	A	80	Switch	Desk 0.75 to 0.85m
3-H3-015	Meeting Room	1	Meeting Room	25	18	Radiant Panels	Remote Sensor Adj.	Yes	Ceiling Cassette - Chilled Water	Central Supply and Extract	14 people at 10 l/s per person (7ach)	14 people at 10 l/s per person (7ach)	Balanced	F7	43	n/a	300	n/a	None	A	80	Switch	Desk 0.75 to 0.85m
3-H3-016	Seminar Room	1	Meeting Room	25	18	Radiant Panels	Remote Sensor Adj.	Yes	Ceiling Cassette - Chilled Water	Central Supply and Extract	23 people at 10 l/s per person (8ach)	23 people at 10 l/s per person (8ach)	Balanced	F7	43	n/a	300	n/a	None	A	80	Switch	Desk 0.75 to 0.85m
3-H3-018	Management/ Admin Office	1	Cellular / Ward Offices	28	18	Radiant Panels	Remote Sensor Adj.	Yes	Ceiling Cassette - Chilled Water	Central Supply and Extract	4	3	Positive	F7	43	n/a	400	n/a	None	A	80	Switch	Desk 0.75 to 0.85m
3-H3-019	Computer Carrels	1	Cellular / Ward Offices	28	18	Radiant Panels	Remote Sensor Adj.	Yes	Ceiling Cassette - Chilled Water	Central Supply and Extract	6 people at 10 l/s per person (7ach)	6 people at 10 l/s per person (7ach)	Balanced	F7	43	n/a	400	n/a	None	A	80	Switch	Desk 0.75 to 0.85m
3-H3-020	Lockers	1	Circulation Equipment Storage Bays	28	16	Radiant Panels	Remote Sensor Adj.	No	None	Central Supply and Extract	5	4	Positive	F7	43	n/a	200	n/a	None	A	80	Automatic Controls	Floor 0m
3-H3-009	Corridor	1	Corridor	28	18	Radiant Panels	Remote Sensor Adj.	No	None	None	0	0	n/a	None	43	n/a	200	n/a	None	A	80	Automatic Controls	Floor 0m
3-H3-021	Corridor	1	Corridor	28	18	Radiant Panels	Remote Sensor Adj.	No	None	None	0	0	n/a	None	43	n/a	200	n/a	None	A	80	Automatic Controls	Floor 0m
G-I1-001	Draught Lobby	1	Circulation Areas - Entrance Lobby	28	Not Controlled	Warm Air Door Curtain	BMS Adjustable Sensor	No	None	None	0	0	n/a	None	43	n/a	200	n/a	None	A	80	Automatic Controls	Floor 0m
G-I1-002	Wheelchair Bay	1	Circulation Areas	28	16	Adjacent Space Transfer Air	None	No	None	Central General Extract	0	3	Negative	None	n/a	n/a	200	n/a	None	A	80	Automatic Controls	Floor 0m
G-I1-003	Security Office	1	Cellular / Ward Offices	28	18	Radiant Panels	Remote Sensor Adj.	Yes	Comfort Cooled Fresh Air	Central Supply and Extract	4	3	Positive	F7	43	n/a	400	n/a	None	A	80	Switch	Desk 0.75 to 0.85m
G-I1-004	Vending Machine	1	Vending Machine	28	16	Adjacent Space Transfer Air	None	No	None	Central General Extract	0	3	Negative	None	n/a	n/a	n/a	n/a	None	n/a	n/a	n/a	Floor 0m
G-I1-005	Reception / Information Desk	1	Reception	28	18	Radiant Panels	Remote Sensor Adj.	Yes	Comfort Cooled Fresh Air	Central Supply and Extract	3	2	Positive	F7	43	n/a	300	n/a	None	A	80	Switch	Desk 0.75 to 0.85m
G-I1-006	Retail Shop	1	Retail Shop	28	18	Radiant Panels	Remote Sensor Adj.	Yes	Comfort Cooled Fresh Air	Central Supply and Extract	3	3	Balanced	F7	43	n/a	300	n/a	None	A	80	Switch	Floor 0m
G-I1-007	Catering Shop	1	Catering Shop	28	18	Radiant Panels	Remote Sensor Adj.	Yes	Comfort Cooled Fresh Air	Central Supply and Extract	3	3	Balanced	F7	43	n/a	300	n/a	None	A	80	Switch	Floor 0m
G-I1-008	Waiting Area	1	Waiting Room	28	18	Radiant Panels	Remote Sensor Adj.	Yes	Ceiling Cassette - Chilled Water	Central Supply and Extract	9 people at 10 l/s per person (7ach)	9 people at 10 l/s per person (7ach)	Balanced	F7	43	n/a	300	n/a	None	A	80	Switch	Floor 0m
G-I1-009	Public Telephone Booth	1	Circulation Phone Booth	28	18	Adjacent Space Transfer	None	No	None	n/a	0	0	n/a	None	n/a	n/a	200	n/a	None	A	80	Automatic Controls	Floor 0m
G-I1-010	WC - Visitors	1	Toilet	28	18	Adjacent Space Transfer Air	None	No	None	Central Dirty Extract	0	10	Negative	None	n/a	41	200	n/a	None	A	80	Automatic Controls	Floor 0m
G-I1-011	WC - Wheelchair accessible	1	Toilet	28	18	Adjacent Space Transfer Air	None	No	None	Central Dirty Extract	0	10	Negative	None	n/a	41	200	n/a	None	A	80	Automatic Controls	Floor 0m
G-I1-012	Assisted Change/Nappy Change	1	Nappy Change	28	18	Radiant Panels	Remote Sensor Adj.	No	None	Central Dirty Extract	0	10	Negative	None	43	41	100	n/a	None	A	80	Automatic Controls	Floor 0m
G-I1-013	DSR	1	DSR	28	18	Adjacent Space Transfer Air	None	No	None	Central Dirty Extract	0	6	Negative	None	n/a	60	100	n/a	None	A	80	Automatic Controls	Floor 0m
G-I1-014	Fire Control room	1	Cellular / Ward Offices	28	18	Radiant Panels	Remote Sensor Adj.	Yes	Comfort Cooled Fresh Air	Central Supply and Extract	4	3	Positive	F7	43	n/a	400	n/a	None	A	80	Switch	Desk 0.75 to 0.85m
B-I2-002	DSR	1	DSR	28	18	Adjacent Space Transfer Air	None	No	None	Central Dirty Extract	0	6	Negative	None	n/a	60	100	n/a	None	A	80	Automatic Controls	Floor 0m
B-I2-004	Store - Beds	1	Storage Area Equipment	28	16	Radiant Panels	Remote Sensor Adj.	No	None	Central General Extract	0	3	Negative	None	43	n/a	200	n/a	None	A	80	Automatic Controls	Floor 0m
B-I2-005	Store - Toys	1	Storage Area Equipment	28	16	Radiant Panels	Remote Sensor Adj.	No	None	Central General Extract	0	3	Negative	None	43	n/a	200	n/a	None	A	80	Automatic Controls	Floor 0m
1-J1-001	Lobby	1	Circulation Areas - Entrance Lobby	28	Not Controlled	Warm Air Door Curtain	BMS Adjustable Sensor	No	None	None	0	0	n/a	None	43	n/a	200	n/a	None	A	80	Automatic Controls	Floor 0m
1-J1-002	WC - Wheelchair accessible	1	Toilet	28	18	Adjacent Space Transfer Air	None	No	None	Central Dirty Extract	0	10	Negative	None	n/a	41	200	n/a	None	A	80	Automatic Controls	Floor 0m
1-J1-003	Body Viewing Room	1	Body View	25	18	Radiant Panels	Remote Sensor Adj.	Yes	Ceiling Cassette - Chilled Water	Central Supply and Extract	4	6	Negative	F7	43	41	100 (KNX)	n/a	None	A	80	Switch / Dimmer	Floor 0m
1-J1-004	Sitting Room with Beverage Bay	1	Common room/staff room/lounge	28	18	Radiant Panels	Remote Sensor Adj.	Yes	Comfort Cooled Fresh Air	Central Supply and Extract	6	8	Negative	F7	43	41	300	n/a	None	A	80	Switch	Floor 0m
G-J2-002	Interview Room	1	Meeting Room	25	18	Radiant Panels	Remote Sensor Adj.	Yes	Ceiling Cassette - Chilled Water	Central Supply and Extract	6 people at 10 l/s per person (10ach)	6 people at 10 l/s per person (10ach)	Balanced	F7	43	n/a	300	n/a	None	A	80	Switch	Desk 0.75 to 0.85m
G-J2-003	Prayer / Meditation / Reflection Area	1	Common room/staff room/lounge	28	18	Radiant Panels	Remote Sensor Adj.	Yes	Ceiling Cassette - Chilled Water	Central Supply and Extract	6	8	Negative	F7	43	n/a	300	n/a	None	A	80	Switch	Floor 0m
G-J2-004	WC wheelchair accessible / Ritual Washing Area	1	Toilet	28	18	Adjacent Space Transfer Air	None	No	None	Central Dirty Extract	0	10	Negative	None	n/a	41	200	n/a	None	A	80	Automatic Controls	Floor 0m
G-J2-005	Store	1	Storage Area Equipment	28	16	Adjacent Space Transfer Air	None	No	None	Central General Extract	0	3	Negative	None	n/a	n/a	200	n/a	None	A	80	Automatic Controls	Floor 0m
G-J2-006	Office	1	Cellular / Ward Offices	28	18	Radiant Panels	Remote Sensor Adj.	Yes	Ceiling Cassette - Chilled Water	Central Supply and Extract	4	3	Positive	F7	43	n/a	400	n/a	None	A	80	Switch	Desk 0.75 to 0.85m
G-J2-001	Corridor	1	Corridor	28	18	None	None	No	None	None	0	0	n/a	None	n/a	n/a	200	n/a	None	A	80	Automatic Controls	Floor 0m
G-J2-007	Switch Cupboard	1	Switch Cupboard	Not Controlled	Not Controlled	None	None	No	None	None	0	0	n/a	None	n/a	n/a	100	n/a	None	A	80	Automatic Controls	Floor 0m
G-K1-001	Meeting Rooms (family size)	1	Meeting Room	25	18	Radiant Panels	Remote Sensor Adj.	Yes	Ceiling Cassette - Chilled Water	Central Supply and Extract	10 people at 10 l/s per person (9ach)	10 people at 10 l/s per person (9ach)	Balanced	F7	43	n/a	300	n/a	None	A	80	Switch	Desk 0.75 to 0.85m
G-K1-002	Meeting Rooms (family size)	1	Meeting Room	25	18	Radiant Panels	Remote Sensor Adj.	Yes	Ceiling Cassette - Chilled Water	Central Supply and Extract	10 people at 10 l/s per person (9ach)	10 people at 10 l/s per person (9ach)	Balanced	F7	43	n/a	300	n/a	None	A	80	Switch	Desk 0.75 to 0.85m
G-K1-003	Office 1	1	Cellular / Ward Offices	28	18	Radiant Panels	Remote Sensor Adj.	Yes	Comfort Cooled Fresh Air	Central Supply and Extract	4	3	Positive	F7	43	n/a	400	n/a	None	A	80	Switch	Desk 0.75 to 0.85m
G-K1-004	Office 6	1	Cellular / Ward Offices	28	18	Radiant Panels	Remote Sensor Adj.	Yes	Comfort Cooled Fresh Air	Central Supply and Extract	4	3	Positive	F7	43	n/a	400	n/a	None	A	80	Switch	Desk 0.75 to 0.85m
G-K1-005	Office 2	1	Cellular / Ward Offices	28	18	Radiant Panels	Remote Sensor Adj.	Yes	Comfort Cooled Fresh Air	Central Supply and Extract	4	3	Positive	F7	43	n/a	400	n/a	None	A	80	Switch	Desk 0.75 to 0.85m
G-K1-006	Waiting	1	Waiting Room	28	18	Radiant Panels	Remote Sensor Adj.	Yes	Comfort Cooled Fresh Air	Central Supply and Extract	5 people at 10 l/s per person (8ach)	5 people at 10 l/s per person (8ach)	Balanced	F7	43	n/a	300	n/a	None	A	80	Switch	Floor 0m
G-K1-007	Nappy Changing Room	1	Nappy Change	28	18	Radiant Panels	Remote Sensor Adj.	No	None	Central Dirty Extract	0	10	Negative	None	43	41	100	n/a	None	A	80	Automatic Controls	Floor 0m

Room No.	Room Name	Qty	Room Function	Temp (max)	Temp (min)	Heating Type	Heating Control	Cooling (present)	Cooling (type)	Ventilation (type)	Supply (ac/hr)	Extract (ac/hr)	Relative pressure	Min filtration	Surface temp	Water temp	Normal lux	Night lux	Local lux	Standby grade	Colour render	Control	Plane
G-K1-008	WC - Wheelchair accessible	1	Toilet	28	18	Adjacent Space Transfer Air	None	No	None	Central Dirty Extract	0	10	Negative	None	n/a	41	200	n/a	None	A	80	Automatic Controls	Floor 0m
G-K1-010	Interview Room	1	Meeting Room	25	18	Radiant Panels	Remote Sensor Adj.	Yes	Wall Mounted Unit	Central Supply and Extract	4 people at 10 l/s per person (6ach)	4 people at 10 l/s per person (6ach)	Balanced	F7	43	n/a	300	n/a	None	A	80	Automatic Controls	Desk 0.75 to 0.85m
G-K1-011	Office 3	1	Cellular / Ward Offices	28	18	Radiant Panels	Remote Sensor Adj.	Yes	Comfort Cooled Fresh Air	Central Supply and Extract	4	3	Positive	F7	43	n/a	400	n/a	None	A	80	Switch	Desk 0.75 to 0.85m
G-K1-012	Office 5	1	Cellular / Ward Offices	28	18	Radiant Panels	Remote Sensor Adj.	Yes	Comfort Cooled Fresh Air	Central Supply and Extract	4	3	Positive	F7	43	n/a	400	n/a	None	A	80	Switch	Desk 0.75 to 0.85m
G-K1-013	Store	1	Storage Area Equipment	28	16	Radiant Panels	Remote Sensor Adj.	No	None	Central General Extract	0	3	Negative	None	43	n/a	200	n/a	None	A	80	Automatic Controls	Floor 0m
G-K1-015	Interview Room	1	Meeting Room	25	18	Radiant Panels	Remote Sensor Adj.	Yes	Wall Mounted Unit	Central Supply and Extract	4 people at 10 l/s per person (6ach)	4 people at 10 l/s per person (6ach)	Balanced	F7	43	n/a	300	n/a	None	A	80	Automatic Controls	Desk 0.75 to 0.85m
G-K1-016	Drop-In Lounge / Beverage Bay	1	Common room/staff room/lounge	28	18	Radiant Panels	Remote Sensor Adj.	Yes	Comfort Cooled Fresh Air	Central Supply and Extract	6	8	Negative	F7	43	41	300	n/a	None	A	80	Switch	Floor 0m
G-K1-017	Drop-In Multi-Purpose Room	1	Meeting Room	25	18	Radiant Panels	Remote Sensor Adj.	Yes	Ceiling Cassette - Chilled Water	Central Supply and Extract	6	8	Negative	F7	43	n/a	300	n/a	None	A	80	Automatic Controls	Desk 0.75 to 0.85m
G-K1-018	WC - Staff	1	Toilet	28	18	Adjacent Space Transfer Air	None	No	None	Central Dirty Extract	0	10	Negative	None	n/a	41	200	n/a	None	A	80	Automatic Controls	Floor 0m
G-K1-019	Beverage Bay	1	Tea Making	28	18	Radiant Panels	Remote Sensor Adj.	No	None	Central General Extract	0	5	Negative	None	43	41	100 (KNX)	n/a	None	A	80	switch	Floor 0m
G-K1-021	Complementary Therapy Room	1	Consulting Room	25	18	Radiant Panels	Remote Sensor Adj.	Yes	Comfort Cooled Fresh Air	Central Supply and Extract	3	3	Balanced	F7	43	41	300	n/a	1000	A	80	Switch	Bed / Trolley 1.45m
G-K1-022	Radio Lollipop Broadcasting Studio, Lobby	1	Circulation Areas	28	18	Radiant Panels	Remote Sensor Adj.	Yes	Wall Mounted Unit	Central Supply and Extract	5	5	Balanced	F7	43	41	200	n/a	None	A	80	Automatic Controls	Floor 0m
G-K1-023	Wheelchair Bay	1	Circulation Equipment Storage Bays	28	16	Adjacent Space Transfer Air	None	No	None	Central General Extract	0	3	Negative	None	n/a	n/a	200	n/a	None	A	80	Automatic Controls	Floor 0m
G-K1-024	Office 4	1	Cellular / Ward Offices	28	18	Radiant Panels	Remote Sensor Adj.	Yes	Comfort Cooled Fresh Air	Central Supply and Extract	4	3	Positive	F7	43	n/a	400	n/a	None	A	80	Automatic Controls	Desk 0.75 to 0.85m
G-K1-025	WC - Wheelchair accessible	1	Toilet	28	18	Adjacent Space Transfer Air	None	No	None	Central Dirty Extract	0	10	Negative	None	n/a	41	200	n/a	None	A	80	Automatic Controls	Floor 0m
G-K1-026	DSR	1	DSR	28	18	Adjacent Space Transfer Air	None	No	None	Central Dirty Extract	0	6	Negative	None	n/a	60	100	n/a	None	A	80	Automatic Controls	Floor 0m
G-K1-029	Disposal Hold	1	Disposal Hold	28	16	Adjacent Space Transfer Air	None	No	None	Central Dirty Extract	0	6	Negative	None	n/a	n/a	200	n/a	None	A	80	Automatic Controls	Floor 0m
G-K1-009	Corridor	1	Corridor	28	18	Adjacent Space Transfer	None	No	None	None	0	0	n/a	None	n/a	n/a	200	n/a	None	A	80	Automatic Controls	Floor 0m
G-K1-028	Corridor	1	Corridor	28	18	Radiant Panels	Remote Sensor Adj.	No	None	None	0	0	n/a	None	43	n/a	200	n/a	None	A	80	Automatic Controls	Floor 0m
G-K1-030	Corridor	1	Corridor	28	18	Radiant Panels	Remote Sensor Adj.	No	None	None	0	0	n/a	None	43	n/a	200	n/a	None	A	80	Automatic Controls	Floor 0m
G-K1-027	Switch Cupboard	1	Switch Cupboard	Not Controlled	Not Controlled	None	None	No	None	None	0	0	n/a	None	n/a	n/a	100	n/a	None	A	80	Automatic Controls	Floor 0m
3-K2-002	Reception/Waiting	1	Waiting Room	28	18	Radiant Panels	Remote Sensor Adj.	Yes	Comfort Cooled Fresh Air	Central Supply and Extract	3	3	Balanced	F7	43	n/a	300	n/a	None	A	80	Switch	Floor 0m
3-K2-004	WC - Female	1	Toilet	28	18	Adjacent Space Transfer Air	None	No	None	Central Dirty Extract	0	10	Negative	None	n/a	41	200	n/a	None	A	80	Automatic Controls	Floor 0m
3-K2-005	WC - Male	1	Toilet	28	18	Adjacent Space Transfer Air	None	No	None	Central Dirty Extract	0	10	Negative	None	n/a	41	200	n/a	None	A	80	Automatic Controls	Floor 0m
3-K2-006	Lounge - non residents	1	Common room/staff room/lounge	28	18	Radiant Panels	Remote Sensor Adj.	Yes	Comfort Cooled Fresh Air	Central Supply and Extract	25 people at 10 l/s per person (8ach)	25 people at 10 l/s per person (8ach)	Balanced	F7	43	41	300	n/a	None	A	80	Switch	Floor 0m
3-K2-007	WC - Wheelchair accessible	1	Toilet	28	18	Radiant Panels	Remote Sensor Adj.	No	None	Central Dirty Extract	0	10	Negative	None	43	41	200	n/a	None	A	80	Automatic Controls	Floor 0m
3-K2-008	Family Room for 4 persons inc en-suite	1	Bedroom	28	18	Radiant Panels	Remote Sensor Adj.	Yes	Comfort Cooled Fresh Air	Natural & Central Supply Air	4	via ensuite	Positive	F7	43	n/a	100	n/a	None	A	80	Switch / Dimmer	Bed / Trolley 1.45m
3-K2-009	En-suite Shower / WC / WHB	1	Toilet	28	18	Radiant Panels	Remote Sensor Adj.	No	None	Central Dirty Extract	0	10	Negative	None	43	41	200	n/a	None	A	80	Automatic Controls	Floor 0m
3-K2-010	Family Room for 4 persons inc en-suite	1	Bedroom	28	18	Radiant Panels	Remote Sensor Adj.	Yes	Comfort Cooled Fresh Air	Natural & Central Supply Air	4	via ensuite	Balanced	F7	43	n/a	100	n/a	None	A	80	Switch / Dimmer	Bed / Trolley 1.45m
3-K2-011	En-suite Shower / WC / WHB	1	Toilet	28	18	Adjacent Space Transfer Air	None	No	None	Central Dirty Extract	0	10	Negative	None	n/a	41	200	n/a	None	A	80	Automatic Controls	Floor 0m
3-K2-012	Family Room for 4 persons inc en-suite	1	Bedroom	28	18	Radiant Panels	Remote Sensor Adj.	Yes	Comfort Cooled Fresh Air	Natural & Central Supply Air	4	via ensuite	Positive	F7	43	n/a	100	n/a	None	A	80	Switch / Dimmer	Bed / Trolley 1.45m
3-K2-013	En-suite Shower / WC / WHB	1	Toilet	28	18	Radiant Panels	Remote Sensor Adj.	No	None	Central Dirty Extract	0	10	Negative	None	43	41	200	n/a	None	A	80	Automatic Controls	Floor 0m
3-K2-014	Family Room for 4 persons inc en-suite	1	Bedroom	28	18	Radiant Panels	Remote Sensor Adj.	Yes	Comfort Cooled Fresh Air	Natural & Central Supply Air	4	via ensuite	Positive	F7	43	n/a	100	n/a	None	A	80	Switch / Dimmer	Bed / Trolley 1.45m
3-K2-015	En-suite Shower / WC / WHB	1	Toilet	28	18	Radiant Panels	Remote Sensor Adj.	No	None	Central Dirty Extract	0	10	Negative	None	43	41	200	n/a	None	A	80	Automatic Controls	Floor 0m
3-K2-016	Family Room for 4 persons inc en-suite	1	Bedroom	28	18	Radiant Panels	Remote Sensor Adj.	Yes	Ceiling Cassette - Chilled Water	Natural & Central Supply Air	4	via ensuite	Positive	F7	43	n/a	100	n/a	None	A	80	Switch / Dimmer	Bed / Trolley 1.45m
3-K2-017	En-suite Shower / WC / WHB	1	Toilet	28	18	Radiant Panels	Remote Sensor Adj.	No	None	Central Dirty Extract	0	10	Negative	None	43	41	200	n/a	None	A	80	Automatic Controls	Floor 0m
3-K2-019	Family Room accessible for 4 persons inc en-suite	1	Bedroom	28	18	Radiant Panels	Remote Sensor Adj.	Yes	Ceiling Cassette - Chilled Water	Natural & Central Supply Air	4	via ensuite	Positive	F7	43	n/a	100	n/a	None	A	80	Switch / Dimmer	Bed / Trolley 1.45m
3-K2-020	En-suite Shower / WC / WHB	1	Toilet	28	18	Radiant Panels	Remote Sensor Adj.	No	None	Central Dirty Extract	0	10	Negative	None	43	41	200	n/a	None	A	80	Automatic Controls	Floor 0m
3-K2-021	Family Room for 4 persons inc en-suite	1	Bedroom	28	18	Radiant Panels	Remote Sensor Adj.	Yes	Comfort Cooled Fresh Air	Natural & Central Supply Air	4	via ensuite	Positive	F7	43	n/a	100	n/a	None	A	80	Switch / Dimmer	Bed / Trolley 1.45m
3-K2-022	En-suite Shower / WC / WHB	1	Toilet	28	18	Adjacent Space Transfer Air	None	No	None	Central Dirty Extract	0	10	Negative	None	n/a	41	200	n/a	None	A	80	Automatic Controls	Floor 0m
3-K2-023	Family Room for 4 persons inc en-suite	1	Bedroom	28	18	Radiant Panels	Remote Sensor Adj.	Yes	Comfort Cooled Fresh Air	Natural & Central Supply Air	4	via ensuite	Positive	F7	43	n/a	100	n/a	None	A	80	Switch / Dimmer	Bed / Trolley 1.45m
3-K2-024	En-suite Shower / WC / WHB	1	Toilet	28	18	Radiant Panels	Remote Sensor Adj.	No	None	Central Dirty Extract	0	10	Negative	None	43	41	200	n/a	None	A	80	Automatic Controls	Floor 0m
3-K2-025	Family Room for 4 persons inc en-suite	1	Bedroom	28	18	Radiant Panels	Remote Sensor Adj.	Yes	Comfort Cooled Fresh Air	Natural & Central Supply Air	4	via ensuite	Positive	F7	43	n/a	100	n/a	None	A	80	Switch / Dimmer	Bed / Trolley 1.45m
3-K2-026	En-suite Shower / WC / WHB	1	Toilet	28	18	Adjacent Space Transfer Air	None	No	None	Central Dirty Extract	0	10	Negative	None	n/a	41	200	n/a	None	A	80	Automatic Controls	Floor 0m
3-K2-027	Family Room for 4 persons inc en-suite	1	Bedroom	28	18	Radiant Panels	Remote Sensor Adj.	Yes	Comfort Cooled Fresh Air	Natural & Central Supply Air	4	via ensuite	Positive	F7	43	n/a	100	n/a	None	A	80	Switch / Dimmer	Bed / Trolley 1.45m
3-K2-028	En-suite Shower / WC / WHB	1	Toilet	28	18	Adjacent Space Transfer Air	None	No	None	Central Dirty Extract	0	10	Negative	None	n/a	41	200	n/a	None	A	80	Automatic Controls	Floor 0m
3-K2-029	Family Room for 4 persons inc en-suite	1	Bedroom	28	18	Radiant Panels	Remote Sensor Adj.	Yes	Comfort Cooled Fresh Air	Natural & Central Supply Air	4	via ensuite	Positive	F7	43	n/a	100	n/a	None	A	80	Switch / Dimmer	Bed / Trolley 1.45m
3-K2-030	En-suite Shower / WC / WHB	1	Toilet	28	18	Adjacent Space Transfer Air	None	No	None	Central Dirty Extract	0	10	Negative	None	n/a	41	200	n/a	None	A	80	Automatic Controls	Floor 0m
3-K2-032	Family Room for 4 persons inc en-suite	1	Bedroom	28	18	Radiant Panels	Remote Sensor Adj.	Yes	Comfort Cooled Fresh Air	Natural & Central Supply Air	4	via ensuite	Positive	F7	43	n/a	100	n/a	None	A	80	Switch / Dimmer	Bed / Trolley 1.45m
3-K2-033	En-suite Shower / WC / WHB	1	Toilet	28	18	Adjacent Space Transfer Air	None	No	None	Central Dirty Extract	0	10	Negative	None	n/a	41	200	n/a	None	A	80	Automatic Controls	Floor 0m
3-K2-035	Family Room for 4 persons inc en-suite	1	Bedroom	28	18	Radiant Panels	Remote Sensor Adj.	Yes	Comfort Cooled Fresh Air	Natural & Central Supply Air	4	via ensuite	Positive	F7	43	n/a	100	n/a	None	A	80	Switch / Dimmer	Bed / Trolley 1.45m

Room No.	Room Name	Qty	Room Function	Temp (max)	Temp (min)	Heating Type	Heating Control	Cooling (present)	Cooling (type)	Ventilation (type)	Supply (ac/hr)	Extract (ac/hr)	Relative pressure	Min filtration	Surface temp	Water temp	Normal lux	Night lux	Local lux	Standby grade	Colour render	Control	Plane
3-K2-036	En-suite Shower / WC / WHB	1	Toilet	28	18	Adjacent Space Transfer Air	None	No	None	Central Dirty Extract	0	10	Negative	None	n/a	41	200	n/a	None	A	80	Automatic Controls	Floor 0m
3-K2-037	Family Room for 4 persons inc en-suite	1	Bedroom	28	18	Radiant Panels	Remote Sensor Adj.	Yes	Comfort Cooled Fresh Air	Natural & Central Supply Air	4	via ensuite	Positive	F7	43	n/a	100	n/a	None	A	80	Switch / Dimmer	Bed / Trolley 1.45m
3-K2-038	En-suite Shower / WC / WHB	1	Toilet	28	18	Adjacent Space Transfer Air	None	No	None	Central Dirty Extract	0	10	Negative	None	n/a	41	200	n/a	None	A	80	Automatic Controls	Floor 0m
3-K2-039	Store	1	Storage Area Equipment	28	16	Radiant Panels	Remote Sensor Adj.	No	None	Central General Extract	0	3	Negative	None	43	n/a	200	n/a	None	A	80	Automatic Controls	Floor 0m
3-K2-040	Family Room for 4 persons inc en-suite	1	Bedroom	28	18	Radiant Panels	Remote Sensor Adj.	Yes	Comfort Cooled Fresh Air	Natural & Central Supply Air	4	via ensuite	Positive	F7	43	n/a	100	n/a	None	A	80	Switch / Dimmer	Bed / Trolley 1.45m
3-K2-041	En-suite Shower / WC / WHB	1	Toilet	28	18	Adjacent Space Transfer Air	None	No	None	Central Dirty Extract	0	10	Negative	None	n/a	41	200	n/a	None	A	80	Automatic Controls	Floor 0m
3-K2-042	Laundry	1	Laundry	28	18	Radiant Panels	Remote Sensor Adj.	Yes	Wall Mounted Unit	Central Supply and Extract	6	10	Negative	F7	43	60	300	n/a	None	A	80	Switch	Floor 0m
3-K2-043	En-suite Shower / WC / WHB	1	Toilet	28	18	Adjacent Space Transfer Air	None	No	None	Central Dirty Extract	0	10	Negative	None	n/a	41	200	n/a	None	A	80	Automatic Controls	Floor 0m
3-K2-044	Family Room for 4 persons inc en-suite	1	Bedroom	28	18	Radiant Panels	Remote Sensor Adj.	Yes	Comfort Cooled Fresh Air	Natural & Central Supply Air	4	via ensuite	Positive	F7	43	n/a	100	n/a	None	A	80	Switch / Dimmer	Bed / Trolley 1.45m
3-K2-045	Family Room for 4 persons inc en-suite	1	Bedroom	28	18	Radiant Panels	Remote Sensor Adj.	Yes	Comfort Cooled Fresh Air	Natural & Central Supply Air	4	via ensuite	Positive	F7	43	n/a	100	n/a	None	A	80	Switch / Dimmer	Bed / Trolley 1.45m
3-K2-046	En-suite Shower / WC / WHB	1	Toilet	28	18	Adjacent Space Transfer Air	None	No	None	Central Dirty Extract	0	10	Negative	None	n/a	41	200	n/a	None	A	80	Automatic Controls	Floor 0m
3-K2-047	DSR	1	DSR	28	18	Adjacent Space Transfer Air	None	No	None	Central Dirty Extract	0	6	Negative	None	n/a	60	100	n/a	None	A	80	Automatic Controls	Floor 0m
3-K2-048	WC - Wheelchair accessible	1	Toilet	28	18	Adjacent Space Transfer Air	None	No	None	Central Dirty Extract	0	10	Negative	None	n/a	41	200	n/a	None	A	80	Automatic Controls	Floor 0m
3-K2-050	Kitchen / Dining Rooms	1	Pantry	28	18	Radiant Panels	Remote Sensor Adj.	Yes	Ceiling Cassette - Chilled Water	Central Supply and Extract	48 people at 10 l/s per person (6ach)	48 people at 10 l/s per person (6ach)	Balanced	F7	43	41	300	n/a	None	A	80	Switch	Floor 0m
3-K2-051	Residents Day Room	1	Common room/staff room/lounge	28	18	Radiant Panels	Remote Sensor Adj.	Yes	Ceiling Cassette - Chilled Water	Central Supply and Extract	15 people at 10 l/s per person (6ach)	15 people at 10 l/s per person (11ach)	Balanced	F7	43	n/a	300	n/a	None	A	80	Switch	Floor 0m
3-K2-053	Residents Play Room	1	Common room/staff room/lounge	28	18	Radiant Panels	Remote Sensor Adj.	Yes	Ceiling Cassette - Chilled Water	Central Supply and Extract	13 people at 10 l/s per person (10ach)	13 people at 10 l/s per person (10ach)	Balanced	F7	43	n/a	300	n/a	None	A	80	Switch	Floor 0m
3-K2-054	Switch/Meter Cupboard	1	Switch/Meter Cupboard	28	16	Adjacent Space Transfer Air	None	No	None	Central General Extract	0	3	Negative	None	n/a	n/a	200	n/a	None	A	80	Automatic Controls	Floor 0m
3-K2-057	Store	1	Storage Area Equipment	28	16	Radiant Panels	Remote Sensor Adj.	No	None	Central General Extract	0	3	Negative	None	43	n/a	200	n/a	None	A	80	Automatic Controls	Floor 0m
3-K2-058	En-suite Shower / WC / WHB	1	Toilet	28	18	Adjacent Space Transfer Air	None	No	None	Central Dirty Extract	0	10	Negative	None	n/a	41	200	n/a	None	A	80	Automatic Controls	Floor 0m
3-K2-059	Family Room for 4 persons inc en-suite	1	Bedroom	28	18	Radiant Panels	Remote Sensor Adj.	Yes	Comfort Cooled Fresh Air	Natural & Central Supply Air	4	via ensuite	Positive	F7	43	n/a	100	n/a	None	A	80	Switch / Dimmer	Bed / Trolley 1.45m
3-K2-060	Family Room accessible for 4 persons inc en-suite	1	Bedroom	28	18	Radiant Panels	Remote Sensor Adj.	Yes	Comfort Cooled Fresh Air	Natural & Central Supply Air	4	via ensuite	Positive	F7	43	n/a	100	n/a	None	A	80	Switch / Dimmer	Bed / Trolley 1.45m
3-K2-061	En-suite Shower / WC / WHB	1	Toilet	28	18	Radiant Panels	Remote Sensor Adj.	No	None	Central Dirty Extract	0	10	Negative	None	43	41	200	n/a	None	A	80	Automatic Controls	Floor 0m
3-K2-062	Family Room for 4 persons inc en-suite	1	Bedroom	28	18	Radiant Panels	Remote Sensor Adj.	Yes	Comfort Cooled Fresh Air	Natural & Central Supply Air	4	via ensuite	Positive	F7	43	n/a	100	n/a	None	A	80	Switch / Dimmer	Bed / Trolley 1.45m
3-K2-063	En-suite Shower / WC / WHB	1	Toilet	28	18	Radiant Panels	Remote Sensor Adj.	No	None	Central Dirty Extract	0	10	Negative	None	43	41	200	n/a	None	A	80	Automatic Controls	Floor 0m
3-K2-064	En-suite Shower / WC / WHB	1	Toilet	28	18	Adjacent Space Transfer Air	None	No	None	Central Dirty Extract	0	10	Negative	None	n/a	41	200	n/a	None	A	80	Automatic Controls	Floor 0m
3-K2-065	Family Room for 4 persons inc en-suite	1	Bedroom	28	18	Radiant Panels	Remote Sensor Adj.	Yes	Comfort Cooled Fresh Air	Natural & Central Supply Air	4	via ensuite	Positive	F7	43	n/a	100	n/a	None	A	80	Switch / Dimmer	Bed / Trolley 1.45m
3-K2-066	Family Room for 4 persons inc en-suite	1	Bedroom	28	18	Radiant Panels	Remote Sensor Adj.	Yes	Comfort Cooled Fresh Air	Natural & Central Supply Air	4	via ensuite	Positive	F7	43	n/a	100	n/a	None	A	80	Switch / Dimmer	Bed / Trolley 1.45m
3-K2-067	En-suite Shower / WC / WHB	1	Toilet	28	18	Adjacent Space Transfer Air	None	No	None	Central Dirty Extract	0	10	Negative	None	n/a	41	200	n/a	None	A	80	Automatic Controls	Floor 0m
3-K2-068	En-suite Shower / WC / WHB	1	Toilet	28	18	Radiant Panels	Remote Sensor Adj.	No	None	Central Dirty Extract	0	10	Negative	None	43	41	200	n/a	None	A	80	Automatic Controls	Floor 0m
3-K2-069	Family Room for 4 persons inc en-suite	1	Bedroom	28	18	Radiant Panels	Remote Sensor Adj.	Yes	Ceiling Cassette - Chilled Water	Natural & Central Supply Air	4	via ensuite	Positive	F7	43	n/a	100	n/a	None	A	80	Switch / Dimmer	Bed / Trolley 1.45m
3-K2-071	En-suite Shower / WC / WHB	1	Toilet	28	18	Adjacent Space Transfer Air	None	No	None	Central Dirty Extract	0	10	Negative	None	n/a	41	200	n/a	None	A	80	Automatic Controls	Floor 0m
3-K2-072	Family Room for 4 persons inc en-suite	1	Bedroom	28	18	Radiant Panels	Remote Sensor Adj.	Yes	Ceiling Cassette - Chilled Water	Natural & Central Supply Air	4	via ensuite	Positive	F7	43	n/a	100	n/a	None	A	80	Switch / Dimmer	Bed / Trolley 1.45m
3-K2-073	Family Room for 4 persons inc en-suite	1	Bedroom	28	18	Radiant Panels	Remote Sensor Adj.	Yes	Ceiling Cassette - Chilled Water	Natural & Central Supply Air	4	via ensuite	Positive	F7	43	n/a	100	n/a	None	A	80	Switch / Dimmer	Bed / Trolley 1.45m
3-K2-074	En-suite Shower / WC / WHB	1	Toilet	28	18	Adjacent Space Transfer Air	None	No	None	Central Dirty Extract	0	10	Negative	None	n/a	41	200	n/a	None	A	80	Automatic Controls	Floor 0m
3-K2-075	Family Room for 4 persons inc en-suite	1	Bedroom	28	18	Radiant Panels	Remote Sensor Adj.	Yes	Comfort Cooled Fresh Air	Natural & Central Supply Air	4	via ensuite	Positive	F7	43	n/a	100	n/a	None	A	80	Switch / Dimmer	Bed / Trolley 1.45m
3-K2-076	En-suite Shower / WC / WHB	1	Toilet	28	18	Adjacent Space Transfer Air	None	No	None	Central Dirty Extract	0	10	Negative	None	n/a	41	200	n/a	None	A	80	Automatic Controls	Floor 0m
3-K2-078	Laundry	1	Laundry	28	18	Radiant Panels	Remote Sensor Adj.	Yes	Wall Mounted Unit	Central Supply and Extract	6	10	Negative	F7	43	60	300	n/a	None	A	80	Switch	Floor 0m
3-K2-080	Storage - refuse	1	Disposal Hold	28	16	Adjacent Space Transfer Air	None	No	None	Central Dirty Extract	0	6	Negative	None	n/a	n/a	200	n/a	None	A	80	Automatic Controls	Floor 0m
3-K2-086	Office - 4 person	1	Cellular / Ward Offices	28	18	Radiant Panels	Remote Sensor Adj.	Yes	Wall Mounted Unit	Central Supply and Extract	4	3	Positive	F7	43	n/a	400	n/a	None	A	80	Switch	Desk 0.75 to 0.85m
3-K2-001	Corridor	1	Corridor	28	18	None	None	No	None	None	0	0	n/a	None	n/a	n/a	200	n/a	None	A	80	Automatic Controls	Floor 0m
3-K2-018	Corridor	1	Corridor	28	18	Radiant Panels	Remote Sensor Adj.	No	None	None	0	0	n/a	None	43	n/a	200	n/a	None	A	80	Automatic Controls	Floor 0m
3-K2-049	Corridor	1	Corridor	28	18	Radiant Panels	Remote Sensor Adj.	No	None	None	0	0	n/a	None	43	n/a	200	n/a	None	A	80	Automatic Controls	Floor 0m
3-K2-052	Corridor	1	Corridor	28	18	Radiant Panels	Remote Sensor Adj.	No	None	None	0	0	n/a	None	43	n/a	200	n/a	None	A	80	Automatic Controls	Floor 0m
3-K2-056	Corridor	1	Corridor	28	18	Radiant Panels	Remote Sensor Adj.	No	None	None	0	0	n/a	None	43	n/a	200	n/a	None	A	80	Automatic Controls	Floor 0m
3-K2-054	Switch/Meter Cupboard	1	Switch Cupboard	Not Controlled	Not Controlled	None	None	No	None	None	0	0	n/a	None	n/a	n/a	100	n/a	None	A	80	Automatic Controls	Floor 0m
3-K2-081	Switch Cup	1	Switch Cup	Not Controlled	Not Controlled	None	None	No	None	None	0	0	n/a	None	n/a	n/a	100	n/a	None	A	80	Automatic Controls	Floor 0m
3-K2-082	Switch Cup	1	Switch Cup	Not Controlled	Not Controlled	None	None	No	None	None	0	0	n/a	None	n/a	n/a	100	n/a	None	A	80	Automatic Controls	Floor 0m
3-K2-083	Switch Cup	1	Switch Cup	Not Controlled	Not Controlled	None	None	No	None	None	0	0	n/a	None	n/a	n/a	100	n/a	None	A	80	Automatic Controls	Floor 0m
3-K2-084	Switch Cup	1	Switch Cup	Not Controlled	Not Controlled	None	None	No	None	None	0	0	n/a	None	n/a	n/a	100	n/a	None	A	80	Automatic Controls	Floor 0m
1-L1-002	Single Bed Room	1	Bedroom	28	18	Radiant Panels	Remote Sensor Adj.	Yes	Comfort Cooled Fresh Air	Natural & Central Supply Air	4	via ensuite	Balanced	F7	43	41	100	5	300	A	80	Switch / Dimmer	Bed / Trolley 1.45m

Room No.	Room Name	Qty	Room Function	Temp (max)	Temp (min)	Heating Type	Heating Control	Cooling (present)	Cooling (type)	Ventilation (type)	Supply (ac/hr)	Extract (ac/hr)	Relative pressure	Min filtration	Surface temp	Water temp	Normal lux	Night lux	Local lux	Standby grade	Colour render	Control	Plane
1-L1-003	En-suite Shower/ WC/ WHB	1	Bathroom	28	20	Adjacent Space Transfer Air	None	No	None	Central Dirty Extract	0	Minimum 10	Negative	None	n/a	41	200	n/a	None	A	80	Automatic Controls	Floor 0m
1-L1-004	Disposal Hold	1	Disposal Hold	28	16	Adjacent Space Transfer Air	None	No	None	Central Dirty Extract	0	6	Negative	None	n/a	n/a	200	n/a	None	A	80	Automatic Controls	Floor 0m
1-L1-005	Intensive Treatment Room	1	Treatment Room	25	18	Radiant Panels	Remote Sensor Adj.	Yes	Comfort Cooled Fresh Air	Central Supply Air	10	0	Positive	F7	43	41	500	n/a	1000	A	90	Switch	Bed / Trolley 1.45m
1-L1-006	Single Bed Room	1	Bedroom	28	18	Radiant Panels	Remote Sensor Adj.	Yes	Comfort Cooled Fresh Air	Natural & Central Supply Air	4	via ensuite	Balanced	F7	43	41	100	5	300	A	80	Switch / Dimmer	Bed / Trolley 1.45m
1-L1-007	En-suite Shower/ WC/ WHB	1	Bathroom	28	20	Radiant Panels	Remote Sensor Adj.	No	None	Central Dirty Extract	0	Minimum 10	Negative	None	43	41	200	n/a	None	A	80	Automatic Controls	Floor 0m
1-L1-008	Touchdown Base	1	staff base	28	18	Radiant Panels	Remote Sensor Adj.	Yes	Comfort Cooled Fresh Air	Central Supply and Extract	2 people at 10l/s/per person (13ach)	2 people at 10l/s/per person (13ach)	Balanced	F7	43	n/a	200/300	n/a	1000	A	80	Switch / Dimmer	Desk 0.75 to 0.85m
1-L1-009	Resuscitation Trolley Bay	1	Resus Trolley bay	28	16	Adjacent Space Transfer	None	No	None	None	0	0	n/a	None	n/a	n/a	200	n/a	None	A	80	Automatic Controls	Floor 0m
1-L1-010	Single Bed Room	1	Bedroom	28	18	Radiant Panels	Remote Sensor Adj.	Yes	Comfort Cooled Fresh Air	Natural & Central Supply Air	4	via ensuite	Balanced	F7	43	41	100	5	300	A	80	Switch / Dimmer	Bed / Trolley 1.45m
1-L1-011	En-suite Shower/ WC/ WHB	1	Bathroom	28	20	Radiant Panels	Remote Sensor Adj.	No	None	Central Dirty Extract	0	Minimum 10	Negative	None	43	41	200	n/a	None	A	80	Automatic Controls	Floor 0m
1-L1-012	Waiting Area, relatives	1	Waiting Room	28	18	Radiant Panels	Remote Sensor Adj.	Yes	Comfort Cooled Fresh Air	Central Supply and Extract	5	5	Balanced	F7	43	n/a	300	n/a	None	A	80	Switch	Floor 0m
1-L1-013	Refreshment: Vending Machine	1	Refreshment: Vending Machine	28	18	Adjacent Space Transfer	None	No	None	None	0	0	n/a	None	n/a	n/a	300	n/a	None	A	80	Switch	Floor 0m
1-L1-014	WC - Wheelchair accessible (Visitors)	1	Toilet	28	18	Adjacent Space Transfer Air	None	No	None	Central Dirty Extract	0	10	Negative	None	n/a	41	200	n/a	None	A	80	Automatic Controls	Floor 0m
1-L1-015	Single Bed Room	1	Bedroom	28	18	Radiant Panels	Remote Sensor Adj.	Yes	Comfort Cooled Fresh Air	Natural & Central Supply Air	6	6 via bedroom and ensuite	Balanced	F7	43	41	100	5	300	A	80	Switch / Dimmer	Bed / Trolley 1.45m
1-L1-016	En-suite Shower/ WC/ WHB	1	Bathroom	28	20	Adjacent Space Transfer Air	None	No	None	Central Dirty Extract	0	Minimum 10	Negative	None	n/a	41	200	n/a	None	A	80	Automatic Controls	Floor 0m
1-L1-017	Single Bed Room	1	Bedroom	28	18	Radiant Panels	Remote Sensor Adj.	Yes	Comfort Cooled Fresh Air	Natural & Central Supply Air	4	via ensuite	Balanced	F7	43	41	100	5	300	A	80	Switch / Dimmer	Bed / Trolley 1.45m
1-L1-018	En-suite Shower/ WC/ WHB	1	Bathroom	28	20	Radiant Panels	Remote Sensor Adj.	No	None	Central Dirty Extract	0	Minimum 10	Negative	None	43	41	200	n/a	None	A	80	Automatic Controls	Floor 0m
1-L1-019	Linen Bay	1	Linen Bay	28	16	Adjacent Space Transfer	None	No	None	Central General Extract	0	3	Negative	None	n/a	n/a	100 (KNX)	n/a	None	A	80	Automatic Controls	Floor 0m
1-L1-020	Hoist Bay	1	Circulation Equipment Storage Bays	28	16	Adjacent Space Transfer	None	No	None	Central General Extract	0	3	Negative	None	n/a	n/a	200	n/a	None	A	80	Automatic Controls	Floor 0m
1-L1-021	Single Bed Room	1	Bedroom	28	18	Radiant Panels	Remote Sensor Adj.	Yes	Comfort Cooled Fresh Air	Natural & Central Supply Air	4	via ensuite	Balanced	F7	43	41	100	5	300	A	80	Switch / Dimmer	Bed / Trolley 1.45m
1-L1-022	En-suite Shower/ WC/ WHB	1	Bathroom	28	20	Adjacent Space Transfer Air	None	No	None	Central Dirty Extract	0	Minimum 10	Negative	None	n/a	41	200	n/a	None	A	80	Automatic Controls	Floor 0m
1-L1-023	Staff Base	1	Cellular / Ward Offices	28	18	Radiant Panels	Remote Sensor Adj.	Yes	Comfort Cooled Fresh Air	Central Supply and Extract	2 people at 10l/s/per person (5ach)	2 people at 10l/s/per person (5ach)	Balanced	F7	43	n/a	400	n/a	None	A	80	Switch	Desk 0.75 to 0.85m
1-L1-024	Single Bed Room	1	Bedroom	28	18	Radiant Panels	Remote Sensor Adj.	Yes	Comfort Cooled Fresh Air	Natural & Central Supply Air	4	via ensuite	Balanced	F7	43	41	100	5	300	A	80	Switch / Dimmer	Bed / Trolley 1.45m
1-L1-025	En-suite Shower/ WC/ WHB	1	Bathroom	28	20	Adjacent Space Transfer Air	None	No	None	Central Dirty Extract	0	10	Negative	None	n/a	41	200	n/a	None	A	80	Automatic Controls	Floor 0m
1-L1-026	WC - Wheelchair accessible (Visitors)	1	Toilet	28	18	Adjacent Space Transfer Air	None	No	None	Central Dirty Extract	0	10	Negative	None	n/a	41	200	n/a	None	A	80	Automatic Controls	Floor 0m
1-L1-027	Patient Waiting	1	Waiting Room	28	18	Radiant Panels	Remote Sensor Adj.	Yes	Comfort Cooled Fresh Air	Central Supply and Extract	11 people at 10l/s/per person (7ach)	11 people at 10l/s/per person (7ach)	Balanced	F7	43	n/a	300	n/a	None	A	80	Switch	Floor 0m
1-L1-028	Multi-Disciplinary Office / Reception	1	Multi Disciplinary Work Areas	28	18	Radiant Panels	Remote Sensor Adj.	Yes	Ceiling Cassette - Chilled Water	Central Supply and Extract	6	4	Positive	F7	43	n/a	400	n/a	None	A	80	Switch	Desk 0.75 to 0.85m
1-L1-029	Consulting/Examination Room	1	Consulting Room	25	18	Radiant Panels	Remote Sensor Adj.	Yes	Ceiling Cassette - Chilled Water	Central Supply and Extract	3	3	Balanced	F7	43	41	300	n/a	1000	A	80	Switch	Bed / Trolley 1.45m
1-L1-030	Consulting/Examination Room	1	Consulting Room	25	18	Radiant Panels	Remote Sensor Adj.	Yes	Ceiling Cassette - Chilled Water	Central Supply and Extract	3	3	Balanced	F7	43	41	300	n/a	1000	A	80	Switch	Bed / Trolley 1.45m
1-L1-031	Consulting/Examination Room	1	Consulting Room	25	18	Radiant Panels	Remote Sensor Adj.	Yes	Ceiling Cassette - Chilled Water	Central Supply and Extract	3	3	Balanced	F7	43	41	300	n/a	1000	A	80	Switch	Bed / Trolley 1.45m
1-L1-032	Consulting/Examination Room	1	Consulting Room	25	18	Radiant Panels	Remote Sensor Adj.	Yes	Ceiling Cassette - Chilled Water	Central Supply and Extract	3	3	Balanced	F7	43	41	300	n/a	1000	A	80	Switch	Bed / Trolley 1.45m
1-L1-033	Dirty Utility	1	Dirty utility	28	18	Adjacent Space Transfer Air	None	No	None	Central Dirty Extract	0	6	Negative	None	n/a	41	200	n/a	None	A	80	Automatic Controls	Floor 0m
1-L1-034	Single Bed Room	1	Bedroom	28	18	Radiant Panels	Remote Sensor Adj.	Yes	Comfort Cooled Fresh Air	Natural & Central Supply Air	4	via ensuite	Balanced	F7	43	41	100	5	300	A	80	Switch / Dimmer	Bed / Trolley 1.45m
1-L1-035	En-suite Shower/ WC/ WHB	1	Bathroom	28	20	Radiant Panels	Remote Sensor Adj.	No	None	Central Dirty Extract	0	Minimum 10	Negative	None	43	41	200	n/a	None	A	80	Automatic Controls	Floor 0m
1-L1-036	Touchdown Base	1	staff base	28	18	Radiant Panels	Remote Sensor Adj.	Yes	Comfort Cooled Fresh Air	Central Supply Air & Extract	2 people at 10l/s/per person (14ach)	2 people at 10l/s/per person (14ach)	Balanced	F7	43	n/a	200/300	n/a	1000	A	80	Switch / Dimmer	Desk 0.75 to 0.85m
1-L1-037	Interview/Relatives Quiet Room	1	Meeting Room	25	18	Radiant Panels	Remote Sensor Adj.	Yes	Ceiling Cassette - Chilled Water	Central Supply and Extract	4 people at 10 l/s per person (6ach)	4 people at 10 l/s per person (6ach)	Balanced	F7	43	n/a	300	n/a	None	A	80	Automatic Controls	Desk 0.75 to 0.85m
1-L1-038	Single Bed Room	1	Bedroom	28	18	Radiant Panels	Remote Sensor Adj.	Yes	Comfort Cooled Fresh Air	Natural & Central Supply Air	4	via ensuite	Balanced	F7	43	41	100	5	300	A	80	Switch / Dimmer	Bed / Trolley 1.45m
1-L1-039	En-suite Shower/ WC/ WHB	1	Bathroom	28	20	Radiant Panels	Remote Sensor Adj.	No	None	Central Dirty Extract	0	Minimum 10	Negative	None	43	41	200	n/a	None	A	80	Automatic Controls	Floor 0m
1-L1-040	En-suite Shower/ WC/ WHB	1	Bathroom	28	20	Adjacent Space Transfer Air	None	No	None	Central Dirty Extract	0	Minimum 10	Negative	None	n/a	41	200	n/a	None	A	80	Automatic Controls	Floor 0m
1-L1-044	Single Bed Room	1	Bedroom	28	18	Radiant Panels	Remote Sensor Adj.	Yes	Comfort Cooled Fresh Air	Natural & Central Supply Air	4	via ensuite	Balanced	F7	43	41	100	5	300	A	80	Switch / Dimmer	Bed / Trolley 1.45m
1-L1-046	Ward Management Office	1	Cellular / Ward Offices	28	18	Radiant Panels	Remote Sensor Adj.	Yes	Comfort Cooled Fresh Air	Central Supply and Extract	4	3	Positive	F7	43	n/a	400	n/a	None	A	80	Switch	Desk 0.75 to 0.85m
1-L1-047	Clean Utility	1	Clean Utility	28	18	Radiant Panels	Remote Sensor Adj.	Yes	Comfort Cooled Fresh Air	Central Supply Air	6	0	Positive	F7	43	41	150	n/a	None	A	80	Automatic Controls	General working plane 1m
1-L1-052	Staff Room	1	Common room/staff room/lounge	28	18	Radiant Panels	Remote Sensor Adj.	Yes	Comfort Cooled Fresh Air	Central Supply and Extract	5 people at 10l/s/per person (7ach)	5 people at 10l/s/per person (7ach)	Balanced	F7	43	41	300	n/a	None	A	80	Switch	Floor 0m
1-L1-053	Multi-disciplinary Office	1	Multi Disciplinary Work Areas	28	18	Radiant Panels	Remote Sensor Adj.	Yes	Comfort Cooled Fresh Air	Central Supply and Extract	6	4	Positive	F7	43	n/a	400	n/a	None	A	80	Switch	Desk 0.75 to 0.85m
1-L1-054	Ward Kitchen	1	Ward Kitchen	28	18	Adjacent Space Transfer Air	None	No	None	Central General Extract	0	6	Negative	None	n/a	60	500	n/a	None	A	80	Switch	General working plane 1m
1-L1-055	Touchdown Base	1	staff base	28	18	Adjacent Space Transfer Air	None	Yes	Comfort Cooled Fresh Air	Central General Extract	0	2 people at 10l/s/per person (6ach)	Negative	n/a	n/a	n/a	200/300	n/a	1000	A	80	Switch / Dimmer	Desk 0.75 to 0.85m
1-L1-060	Teaching Room	1	Classroom	28	18	Radiant Panels	Remote Sensor Adj.	Yes	Ceiling Cassette - Chilled Water	Central Supply and Extract	10 people at 10 l/s per person (6ach)	10 people at 10 l/s per person (6ach)	Balanced	F7	43	41	300	n/a	None	A	80	Switch	Desk 0.75 to 0.85m

Room No.	Room Name	Qty	Room Function	Temp (max)	Temp (min)	Heating Type	Heating Control	Cooling (present)	Cooling (type)	Ventilation (type)	Supply (ac/hr)	Extract (ac/hr)	Relative pressure	Min filtration	Surface temp	Water temp	Normal lux	Night lux	Local lux	Standby grade	Colour render	Control	Plane
1-L1-061	Dirty Utility	1	Dirty utility	28	18	Radiant Panels	Remote Sensor Adj.	No	None	Central Dirty Extract	0	6	Negative	None	43	41	200	n/a	None	A	80	Automatic Controls	Floor 0m
1-L1-066	Single Bed Room	1	Bedroom	28	18	Radiant Panels	Remote Sensor Adj.	Yes	Comfort Cooled Fresh Air	Natural & Central Supply Air	4	via ensuite	Balanced	F7	43	41	100	5	300	A	80	Switch / Dimmer	Bed / Trolley 1.45m
1-L1-067	Shower Room:en-suite	1	Bathroom	28	20	Adjacent Space Transfer Air	None	No	None	Central Dirty Extract	0	Minimum 10	Negative	None	n/a	41	200	n/a	None	A	80	Automatic Controls	Floor 0m
1-L1-068	Single Bed Room	1	Bedroom	28	18	Radiant Panels	Remote Sensor Adj.	Yes	Comfort Cooled Fresh Air	Central Supply Air	10	10 via the ensuite	Positive	H14	43	41	100	5	300	A	80	Switch / Dimmer	Bed / Trolley 1.45m
1-L1-069	Shower Room:en-suite	1	Bathroom	28	20	Radiant Panels	Remote Sensor Adj.	No	None	Central Dirty Extract	0	45	Negative	None	43	41	200	n/a	None	A	80	Automatic Controls	Floor 0m
1-L1-070	Interview/Relatives Quiet Room	1	Meeting Room	25	18	Radiant Panels	Remote Sensor Adj.	Yes	Comfort Cooled Fresh Air	Central Supply and Extract	4 people at 10 l/s per person (6ach)	4 people at 10 l/s per person (6ach)	Balanced	F7	43	n/a	300	n/a	None	A	80	Automatic Controls	Desk 0.75 to 0.85m
1-L1-071	Linen Bay	1	Linen Bay	28	16	Adjacent Space Transfer	None	No	None	Central General Extract	0	3	Negative	None	n/a	n/a	100 (KNX)	n/a	None	A	80	Automatic Controls	Floor 0m
1-L1-072	WC Staff	1	Toilet	28	18	Adjacent Space Transfer Air	None	No	None	Central Dirty Extract	0	10	Negative	None	n/a	41	200	n/a	None	A	80	Automatic Controls	Floor 0m
1-L1-073	WC Staff	1	Toilet	28	18	Adjacent Space Transfer Air	None	No	None	Central Dirty Extract	0	10	Negative	None	n/a	41	200	n/a	None	A	80	Automatic Controls	Floor 0m
1-L1-074	Resuscitation Trolley Bay	1	Resus Trolley bay	28	16	Adjacent Space Transfer	None	No	None	None	0	0	n/a	None	n/a	n/a	200	n/a	None	A	80	Automatic Controls	Floor 0m
1-L1-075	Staff Base	1	Cellular / Ward Offices	28	18	Radiant Panels	Remote Sensor Adj.	Yes	Comfort Cooled Fresh Air	Central Supply and Extract	6	8	Negative	F7	43	n/a	400	n/a	None	A	80	Automatic Controls	Desk 0.75 to 0.85m
1-L1-076	Storage Consumables	1	Storage Area Equipment	28	16	Radiant Panels	Remote Sensor Adj.	No	None	Central General Extract	0	3	Negative	None	43	n/a	200	n/a	None	A	80	Automatic Controls	Floor 0m
1-L1-077	En-suite Accessible Shower/Wc/WHB	1	Bathroom	28	20	Adjacent Space Transfer Air	None	No	None	Central Dirty Extract	0	10	Negative	None	n/a	41	200	n/a	None	A	80	Automatic Controls	Floor 0m
1-L1-078	Hoist Bay	1	Circulation Equipment Storage Bays	28	16	Adjacent Space Transfer	None	No	None	Central General Extract	0	3	Negative	None	n/a	n/a	200	n/a	None	A	80	Automatic Controls	Floor 0m
1-L1-079	WC Staff	1	Toilet	28	18	Adjacent Space Transfer Air	None	No	None	Central Dirty Extract	0	10	Negative	None	n/a	41	200	n/a	None	A	80	Automatic Controls	Floor 0m
1-L1-080	WC: Independent Wheelchair	1	Toilet	28	18	Adjacent Space Transfer Air	None	No	None	Central Dirty Extract	0	10	Negative	None	n/a	41	200	n/a	None	A	80	Automatic Controls	Floor 0m
1-L1-082	Relatives Overnight Stay Room	1	Relatives Overnight Stay	28	20	Radiant Panels	Remote Sensor Adj.	Yes	Comfort Cooled Fresh Air	Central Supply Air	4	0	Positive	F7	43	n/a	100	n/a	None	A	80	Switch	Bed / Trolley 1.45m
1-L1-083	Single Bedroom (level 1)	1	Bedroom	28	18	Radiant Panels	Remote Sensor Adj.	Yes	Comfort Cooled Fresh Air	Natural & Central Supply Air	4	via ensuite	Balanced	F7	43	41	100	5	300	A	80	Switch / Dimmer	Bed / Trolley 1.45m
1-L1-084	Shower Room:en-suite	1	Bathroom	28	20	Adjacent Space Transfer Air	None	No	None	Central Dirty Extract	0	Minimum 10	Negative	None	n/a	41	200	n/a	None	A	80	Automatic Controls	Floor 0m
1-L1-085	Mobile X-Ray Bay	1	Circulation Equipment Storage Bays	28	16	Adjacent Space Transfer Air	None	No	None	Central General Extract	0	3	Negative	None	n/a	n/a	200	n/a	None	A	80	Automatic Controls	Floor 0m
1-L1-086A	Storage Equipment	1	Storage Area Equipment	28	16	Adjacent Space Transfer Air	None	No	None	Central General Extract	0	3	Negative	None	n/a	n/a	200	n/a	None	A	80	Automatic Controls	Floor 0m
1-L1-086B	Storage Equipment	1	Storage Area Equipment	28	16	Adjacent Space Transfer Air	None	No	None	Central General Extract	0	3	Negative	None	n/a	n/a	200	n/a	None	A	80	Automatic Controls	Floor 0m
1-L1-087	Shower Room:en-suite	1	Bathroom	28	20	Radiant Panels	Remote Sensor Adj.	No	None	Central Dirty Extract	0	Minimum 10	Negative	None	43	41	200	n/a	None	A	80	Automatic Controls	Floor 0m
1-L1-088	Single Bedroom (level 1)	1	Bedroom	28	18	Radiant Panels	Remote Sensor Adj.	Yes	Comfort Cooled Fresh Air	Natural & Central Supply Air	4	via ensuite	Balanced	F7	43	41	100	5	300	A	80	Switch / Dimmer	Bed / Trolley 1.45m
1-L1-089	Touchdown Base	1	Staff base	28	18	Radiant Panels	Remote Sensor Adj.	No	None	Central Supply and Extract	2 people at 10l/s/per person (7ach)	2 people at 10l/s/per person (7ach)	Balanced	F7	43	n/a	200/300	n/a	1000	A	80	Switch / Dimmer	Desk 0.75 to 0.85m
1-L1-090	Storage Stationery	1	Storage Area Equipment	28	16	Radiant Panels	Remote Sensor Adj.	No	None	Central General Extract	0	3	Negative	None	43	n/a	200	n/a	None	A	80	Automatic Controls	Floor 0m
1-L1-091	Single Bedroom (level 1)	1	Bedroom	28	18	Radiant Panels	Remote Sensor Adj.	Yes	Comfort Cooled Fresh Air	Natural & Central Supply Air	4	via ensuite	Balanced	F7	43	41	100	5	300	A	80	Switch / Dimmer	Bed / Trolley 1.45m
1-L1-092	Shower Room:en-suite	1	Bathroom	28	20	Radiant Panels	Remote Sensor Adj.	No	None	Central Dirty Extract	0	Minimum 10	Negative	None	43	41	200	n/a	None	A	80	Automatic Controls	Floor 0m
1-L1-093	Single Bedroom (level 1)	1	Bedroom	28	18	Radiant Panels	Remote Sensor Adj.	Yes	Comfort Cooled Fresh Air	Natural & Central Supply Air	4	via ensuite	Balanced	F7	43	41	100	5	300	A	80	Switch / Dimmer	Bed / Trolley 1.45m
1-L1-094	Shower Room:en-suite	1	Bathroom	28	20	Adjacent Space Transfer Air	None	No	None	Central Dirty Extract	0	Minimum 10	Negative	None	n/a	41	200	n/a	None	A	80	Automatic Controls	Floor 0m
1-L1-095	DSR	1	DSR	28	18	Adjacent Space Transfer Air	None	No	None	Central Dirty Extract	0	6	Negative	None	n/a	60	100	n/a	None	A	80	Automatic Controls	Floor 0m
1-L1-096	Disposal Hold	1	Disposal Hold	28	16	Adjacent Space Transfer Air	None	No	None	Central Dirty Extract	0	6	Negative	None	n/a	n/a	200	n/a	None	A	80	Automatic Controls	Floor 0m
1-L1-097	4 Bed Room	1	Multi-bed Wards	28	18	Radiant Panels	Remote Sensor Adj.	Yes	Comfort Cooled Fresh Air	Natural and Central Supply Air	4	via ensuite	positive to ensuite	F7	43	41	100	5	300	A	80	switch / dimmer	Bed / Trolley 1.45m
1-L1-099	En-suite	1	Bathroom	28	20	Radiant Panels	Remote Sensor Adj.	No	None	Central Dirty Extract	0	10	Negative	None	43	41	200	n/a	None	A	80	Automatic Controls	Floor 0m
1-L1-100	4 Bed Room	1	Multi-bed Wards	28	18	Radiant Panels	Remote Sensor Adj.	Yes	Comfort Cooled Fresh Air	Natural and Central Supply Air	4	via ensuite	positive to ensuite	F7	43	41	100	5	300	A	80	switch / dimmer	Bed / Trolley 1.45m
1-L1-101	En-suite	1	Bathroom	28	20	Adjacent Space Transfer Air	None	No	None	Central Dirty Extract	0	10	Negative	None	n/a	41	200	n/a	None	A	80	Automatic Controls	Floor 0m
1-L1-103	Treatment Room	1	Treatment Room	25	18	Radiant Panels	Remote Sensor Adj.	Yes	Comfort Cooled Fresh Air	Central Supply Air	10	0	Positive	F7	43	41	500	n/a	1000	A	90	Switch	Bed / Trolley 1.45m
1-L1-104	Isolation Lobby	1	Isolation Lobby	28	21	Warm Air - Reheat Battery	Local Lows Adjustable Sensor	Yes	Comfort Cooled Fresh Air	Central Supply Air	56	0	Positive	H14	n/a	n/a	200	n/a	None	A	80	Automatic Controls	Floor 0m
1-L1-108	Physical Measure	1	Consulting Room	25	18	Radiant Panels	Remote Sensor Adj.	No	None	None	0	0	n/a	None	n/a	41	300	n/a	1000	A	80	Switch	Bed / Trolley 1.45m
1-L1-109	Touchdown Base	1	staff base	28	18	Radiant Panels	Remote Sensor Adj.	Yes	Comfort Cooled Fresh Air	Central General Extract	0	2 people at 10l/s/per person (14ach)	Negative	n/a	43	n/a	200/300	n/a	1000	A	80	Switch / Dimmer	Desk 0.75 to 0.85m
1-L1-001	Corridor	1	Corridor	28	18	Radiant Panels	Remote Sensor Adj.	No	None	None	0	0	n/a	None	43	n/a	200	n/a	None	A	80	Automatic Controls	Floor 0m
1-L1-105	Corridor	1	Corridor	28	18	Radiant Panels	Remote Sensor Adj.	No	None	None	0	0	n/a	None	43	n/a	200	n/a	None	A	80	Automatic Controls	Floor 0m
1-L1-106	Switch Cupboard	1	Switch Cupboard	Not Controlled	Not Controlled	None	None	No	None	None	0	0	n/a	None	n/a	n/a	100	n/a	None	A	80	Automatic Controls	Floor 0m
1-L1-107	Switch Cupboard	1	Switch Cupboard	Not Controlled	Not Controlled	None	None	No	None	None	0	0	n/a	None	n/a	n/a	100	n/a	None	A	80	Automatic Controls	Floor 0m
2-L2-002	Disposal Hold	1	Disposal Hold	28	16	Adjacent Space Transfer Air	None	No	None	Central Dirty Extract	0	6	Negative	None	n/a	n/a	200	n/a	None	A	80	Automatic Controls	Floor 0m
2-L2-003	Linen Bay	1	Linen Bay	28	16	Adjacent Space Transfer	None	No	None	None	0	0	n/a	None	n/a	n/a	100 (KNX)	n/a	None	A	80	Automatic Controls	Floor 0m
2-L2-004	Single Bedroom	1	Bedroom	28	18	Radiant Panels	Remote Sensor Adj.	Yes	Comfort Cooled Fresh Air	Natural & Central Supply Air	4	via ensuite	Balanced	F7	43	41	100	5	300	A	80	Switch / Dimmer	Bed / Trolley 1.45m
2-L2-005	Shower Room:en-suite	1	Bathroom	28	20	Adjacent Space Transfer Air	None	No	None	Central Dirty Extract	0	Minimum 10	Negative	None	n/a	41	200	n/a	None	A	80	Automatic Controls	Floor 0m
2-L2-006	Single Bedroom	1	Bedroom	28	18	Radiant Panels	Remote Sensor Adj.	Yes	Comfort Cooled Fresh Air	Natural & Central Supply Air	4	via ensuite	Balanced	F7	43	41	100	5	300	A	80	Switch / Dimmer	Bed / Trolley 1.45m
2-L2-007	Shower Room:en-suite	1	Bathroom	28	20	Radiant Panels	Remote Sensor Adj.	No	None	Central Dirty Extract	0	Minimum 10	Negative	None	43	41	200	n/a	None	A	80	Automatic Controls	Floor 0m

Room No.	Room Name	Qty	Room Function	Temp (max)	Temp (min)	Heating Type	Heating Control	Cooling (present)	Cooling (type)	Ventilation (type)	Supply (ac/hr)	Extract (ac/hr)	Relative pressure	Min filtration	Surface temp	Water temp	Normal lux	Night lux	Local lux	Standby grade	Colour render	Control	Plane
2-L2-008	Hoist Bay	1	Circulation Equipment Storage Bays	28	16	Adjacent Space Transfer	None	No	None	None	0	0	n/a	None	n/a	n/a	200	n/a	None	A	80	Automatic Controls	Floor 0m
2-L2-009	Touchdown Base	1	staff base	28	18	Radiant Panels	Remote Sensor Adj.	Yes	Comfort Cooled Fresh Air	Central Supply Air	2 people at 10l/s/per person (13ach)	0	Positive	F7	43	n/a	200/300	n/a	1000	A	80	Switch / Dimmer	General working plane 1m
2-L2-010	Single Bedroom	1	Bedroom	28	18	Radiant Panels	Remote Sensor Adj.	Yes	Comfort Cooled Fresh Air	Natural & Central Supply Air	6	6 via bedroom ensuite	Balanced	F7	43	41	100	5	300	A	80	Switch / Dimmer	Bed / Trolley 1.45m
2-L2-011	Shower Room:en-suite	1	Bathroom	28	20	Radiant Panels	Remote Sensor Adj.	No	None	Central Dirty Extract	0	10	Negative	None	43	41	200	n/a	None	A	80	Automatic Controls	Floor 0m
2-L2-012	Store	1	Storage Area Equipment	28	16	Radiant Panels	Remote Sensor Adj.	No	None	Central General Extract	0	3	Negative	None	43	n/a	200	n/a	None	A	80	Automatic Controls	Floor 0m
2-L2-013	Single Bedroom	1	Bedroom	28	18	Radiant Panels	Remote Sensor Adj.	Yes	Comfort Cooled Fresh Air	Natural & Central Supply Air	4	via ensuite	Balanced	F7	43	41	100	5	300	A	80	Switch / Dimmer	Bed / Trolley 1.45m
2-L2-014	Shower Room:en-suite	1	Bathroom	28	20	Adjacent Space Transfer Air	None	No	None	Central Dirty Extract	0	Minimum 10	Negative	None	n/a	41	200	n/a	None	A	80	Automatic Controls	Floor 0m
2-L2-015	Single Bedroom	1	Bedroom	28	18	Radiant Panels	Remote Sensor Adj.	Yes	Comfort Cooled Fresh Air	Natural & Central Supply Air	4	via ensuite	Balanced	F7	43	41	100	5	300	A	80	Switch / Dimmer	Bed / Trolley 1.45m
2-L2-016	Shower Room:en-suite	1	Bathroom	28	20	Radiant Panels	Remote Sensor Adj.	No	None	Central Dirty Extract	0	Minimum 10	Negative	None	43	41	200	n/a	None	A	80	Automatic Controls	Floor 0m
2-L2-017	Touchdown Base	1	staff base	28	18	Radiant Panels	Remote Sensor Adj.	Yes	Comfort Cooled Fresh Air	Central Supply Air	2 people at 10l/s/per person (13ach)	0	Positive	F7	43	n/a	200/300	n/a	1000	A	80	Switch / Dimmer	General working plane 1m
2-L2-018	Single Bedroom	1	Bedroom	28	18	Radiant Panels	Remote Sensor Adj.	Yes	Comfort Cooled Fresh Air	Natural & Central Supply Air	4	via ensuite	Balanced	F7	43	41	100	5	300	A	80	Switch / Dimmer	Bed / Trolley 1.45m
2-L2-019	Shower Room:en-suite	1	Bathroom	28	20	Radiant Panels	Remote Sensor Adj.	No	None	Central Dirty Extract	0	Minimum 10	Negative	None	43	41	200	n/a	None	A	80	Automatic Controls	Floor 0m
2-L2-020	Resuscitation Trolley Bay	1	Resus Trolley bay	28	16	Adjacent Space Transfer	None	No	None	None	0	0	n/a	None	n/a	n/a	200	n/a	None	A	80	Automatic Controls	Floor 0m
2-L2-021	Single Bedroom	1	Bedroom	28	18	Radiant Panels	Remote Sensor Adj.	Yes	Comfort Cooled Fresh Air	Natural & Central Supply Air	4	via ensuite	Balanced	F7	43	41	100	5	300	A	80	Switch / Dimmer	Bed / Trolley 1.45m
2-L2-022	Shower Room:en-suite	1	Bathroom	28	20	Radiant Panels	Remote Sensor Adj.	No	None	Central Dirty Extract	0	Minimum 10	Negative	None	43	41	200	n/a	None	A	80	Automatic Controls	Floor 0m
2-L2-023	Single Bedroom	1	Bedroom	28	18	Radiant Panels	Remote Sensor Adj.	Yes	Comfort Cooled Fresh Air	Natural & Central Supply Air	4	via ensuite	Balanced	F7	43	41	100	5	300	A	80	Switch / Dimmer	Bed / Trolley 1.45m
2-L2-024	Shower Room:en-suite	1	Bathroom	28	20	Adjacent Space Transfer Air	None	No	None	Central Dirty Extract	0	Minimum 10	Negative	None	n/a	41	200	n/a	None	A	80	Automatic Controls	Floor 0m
2-L2-025	Touchdown Base	1	staff base	28	18	Radiant Panels	Remote Sensor Adj.	Yes	Comfort Cooled Fresh Air	Central Supply Air	2 people at 10l/s/per person (13ach)	0	Positive	F7	43	n/a	200/300	n/a	1000	A	80	Switch / Dimmer	General working plane 1m
2-L2-026	Single Bedroom	1	Bedroom	28	18	Radiant Panels	Remote Sensor Adj.	Yes	Comfort Cooled Fresh Air	Natural & Central Supply Air	4	via ensuite	Balanced	F7	43	41	100	5	300	A	80	Switch / Dimmer	Bed / Trolley 1.45m
2-L2-027	Shower Room:en-suite	1	Bathroom	28	20	Adjacent Space Transfer Air	None	No	None	Central Dirty Extract	0	Minimum 10	Negative	None	n/a	41	200	n/a	None	A	80	Automatic Controls	Floor 0m
2-L2-028	Single Bedroom	1	Bedroom	28	18	Radiant Panels	Remote Sensor Adj.	Yes	Comfort Cooled Fresh Air	Natural & Central Supply Air	4	via ensuite	Balanced	F7	43	41	100	5	300	A	80	Switch / Dimmer	Bed / Trolley 1.45m
2-L2-029	Shower Room:en-suite	1	Bathroom	28	20	Adjacent Space Transfer Air	None	No	None	Central Dirty Extract	0	Minimum 10	Negative	None	n/a	41	200	n/a	None	A	80	Automatic Controls	Floor 0m
2-L2-030	Dirty Utility	1	Dirty utility	28	18	Adjacent Space Transfer Air	None	No	None	Central Dirty Extract	0	6	Negative	None	n/a	41	200	n/a	None	A	80	Automatic Controls	Floor 0m
2-L2-031	DSR	1	DSR	28	18	Adjacent Space Transfer Air	None	No	None	Central Dirty Extract	0	6	Negative	None	n/a	60	100	n/a	None	A	80	Automatic Controls	Floor 0m
2-L2-032	Single Bedroom	1	Bedroom	28	18	Radiant Panels	Remote Sensor Adj.	Yes	Comfort Cooled Fresh Air	Natural & Central Supply Air	4	via ensuite	Balanced	F7	43	41	100	5	300	A	80	Switch / Dimmer	Bed / Trolley 1.45m
2-L2-033	Shower Room:en-suite	1	Bathroom	28	20	Radiant Panels	Remote Sensor Adj.	No	None	Central Dirty Extract	0	Minimum 10	Negative	None	43	41	200	n/a	None	A	80	Automatic Controls	Floor 0m
2-L2-034	Single Bedroom	1	Bedroom	28	18	Radiant Panels	Remote Sensor Adj.	Yes	Comfort Cooled Fresh Air	Natural & Central Supply Air	4	via ensuite	Balanced	F7	43	41	100	5	300	A	80	Switch / Dimmer	Bed / Trolley 1.45m
2-L2-035	Shower Room:en-suite	1	Bathroom	28	20	Adjacent Space Transfer Air	None	No	None	Central Dirty Extract	0	Minimum 10	Negative	None	n/a	41	200	n/a	None	A	80	Automatic Controls	Floor 0m
2-L2-036	Single Bedroom	1	Bedroom	28	18	Radiant Panels	Remote Sensor Adj.	Yes	Comfort Cooled Fresh Air	Natural & Central Supply Air	4	via ensuite	Balanced	F7	43	41	100	5	300	A	80	Switch / Dimmer	Bed / Trolley 1.45m
2-L2-037	Shower Room:en-suite	1	Bathroom	28	20	Radiant Panels	Remote Sensor Adj.	No	None	Central Dirty Extract	0	Minimum 10	Negative	None	43	41	200	n/a	None	A	80	Automatic Controls	Floor 0m
2-L2-038	Isolation Bedroom Entrance Lobby	1	Isolation Lobby	28	21	Warm Air - Reheat Battery	Local / BMS Adjustable Sensor	Yes	Comfort Cooled Fresh Air	Central Supply	49	0	Positive	H14	n/a	41	200	n/a	None	A	80	Automatic Controls	Floor 0m
2-L2-039	Single Isolation Bedroom	1	Isolation Bedroom	28	21	Adjacent Space Transfer Air	BMS Adjustable Sensor	Yes	Comfort Cooled Fresh Air	Supply via lobby	10	10 via the ensuite	Balanced	H14	n/a	41	100	5	300	A	80	Switch / Dimmer	Bed / Trolley 1.45m
2-L2-040	Isolation Shower Room	1	Isolation Shower Room Ensuite	28	20	Adjacent Space Transfer Air	None	No	None	Dirty Extract	0	49	Negative	None	n/a	41	150 (KNX)	n/a	None	A	80	Automatic Controls	Floor 0m
2-L2-041	Single Bedroom	1	Bedroom	28	18	Radiant Panels	Remote Sensor Adj.	Yes	Comfort Cooled Fresh Air	Natural & Central Supply Air	4	via ensuite	Balanced	F7	43	41	100	5	300	A	80	Switch / Dimmer	Bed / Trolley 1.45m
2-L2-042	Shower Room:en-suite	1	Bathroom	28	20	Adjacent Space Transfer Air	None	No	None	Central Dirty Extract	0	Minimum 10	Negative	None	n/a	41	200	n/a	None	A	80	Automatic Controls	Floor 0m
2-L2-043	Single Bedroom	1	Bedroom	28	18	Radiant Panels	Remote Sensor Adj.	Yes	Comfort Cooled Fresh Air	Natural & Central Supply Air	4	via ensuite	Balanced	F7	43	41	100	5	300	A	80	Switch / Dimmer	Bed / Trolley 1.45m
2-L2-044	Shower Room:en-suite	1	Bathroom	28	20	Radiant Panels	Remote Sensor Adj.	No	None	Central Dirty Extract	0	Minimum 10	Negative	None	43	41	200	n/a	None	A	80	Automatic Controls	Floor 0m
2-L2-045	Touchdown Base	8	staff base	28	18	Radiant Panels	Remote Sensor Adj.	Yes	Comfort Cooled Fresh Air	Central Supply Air	2 people at 10l/s/per person (13ach)	0	Positive	F7	43	n/a	200/300	n/a	1000	A	80	Switch / Dimmer	General working plane 1m
2-L2-046	Single Bedroom	1	Bedroom	28	18	Radiant Panels	Remote Sensor Adj.	Yes	Comfort Cooled Fresh Air	Natural & Central Supply Air	4	via ensuite	Balanced	F7	43	41	100	5	300	A	80	Switch / Dimmer	Bed / Trolley 1.45m
2-L2-047	Shower Room:en-suite	1	Bathroom	28	20	Adjacent Space Transfer Air	None	No	None	Central Dirty Extract	0	Minimum 10	Negative	None	n/a	41	200	n/a	None	A	80	Automatic Controls	Floor 0m
2-L2-048	Single Bedroom	1	Bedroom	28	18	Radiant Panels	Remote Sensor Adj.	Yes	Comfort Cooled Fresh Air	Natural & Central Supply Air	4	via ensuite	Balanced	F7	43	41	100	5	300	A	80	Switch / Dimmer	Bed / Trolley 1.45m
2-L2-049	Shower Room:en-suite	1	Bathroom	28	20	Radiant Panels	Remote Sensor Adj.	No	None	Central Dirty Extract	0	Minimum 10	Negative	None	43	41	200	n/a	None	A	80	Automatic Controls	Floor 0m
2-L2-050	Single Bedroom	1	Bedroom	28	18	Radiant Panels	Remote Sensor Adj.	Yes	Comfort Cooled Fresh Air	Natural & Central Supply Air	4	via ensuite	Balanced	F7	43	41	100	5	300	A	80	Switch / Dimmer	Bed / Trolley 1.45m
2-L2-051	Shower Room:en-suite	1	Bathroom	28	20	Radiant Panels	Remote Sensor Adj.	No	None	Central Dirty Extract	0	Minimum 10	Negative	None	43	41	200	n/a	None	A	80	Automatic Controls	Floor 0m
2-L2-052	Clean Utility	1	Clean Utility	28	18	Radiant Panels	Remote Sensor Adj.	Yes	Comfort Cooled Fresh Air	Central Supply Air	6	0	Positive	F7	43	41	150	n/a	None	A	80	Automatic Controls	General working plane 1m
2-L2-053	Interview Room	1	Meeting Room	25	18	Radiant Panels	Remote Sensor Adj.	Yes	Comfort Cooled Fresh Air	Central Supply and Extract	4 people at 10 l/s per person (6ach)	4 people at 10 l/s per person (6ach)	Balanced	F7	43	n/a	300	n/a	None	A	80	Switch	Desk 0.75 to 0.85m

Room No.	Room Name	Qty	Room Function	Temp (max)	Temp (min)	Heating Type	Heating Control	Cooling (present)	Cooling (type)	Ventilation (type)	Supply (ac/hr)	Extract (ac/hr)	Relative pressure	Min filtration	Surface temp	Water temp	Normal lux	Night lux	Local lux	Standby grade	Colour render	Control	Plane
2-L2-054	Dirty Utility	1	Dirty utility	28	18	Adjacent Space Transfer Air	None	No	None	Central Dirty Extract	0	6	Negative	None	n/a	41	200	n/a	None	A	80	Automatic Controls	Floor 0m
2-L2-055	Sitting Room	1	Common room/staff room/lounge	28	18	Radiant Panels	Remote Sensor Adj.	Yes	Comfort Cooled Fresh Air	Central Supply and Extract	6	8	Negative	F7	43	n/a	300	n/a	None	A	80	Switch	Floor 0m
2-L2-056	Ward Management Office	1	Cellular / Ward Offices	28	18	Radiant Panels	Remote Sensor Adj.	Yes	Wall Mounted Unit	Central Supply and Extract	3 people at 10 l/s per person (4ach)	3 people at 10 l/s per person (4ach)	Balanced	F7	43	n/a	400	n/a	None	A	80	Switch	Desk 0.75 to 0.85m
2-L2-057	Multi-disciplinary Office	1	Multi Disciplinary Work Areas	28	18	Radiant Panels	Remote Sensor Adj.	Yes	Ceiling Cassette - Chilled Water	Central Supply and Extract	4	3	Positive	F7	43	n/a	400	n/a	None	A	80	Switch	Desk 0.75 to 0.85m
2-L2-058	Store	1	Storage Area Equipment	28	16	Radiant Panels	Remote Sensor Adj.	No	None	Central General Extract	0	3	Negative	None	43	n/a	200	n/a	None	A	80	Automatic Controls	Floor 0m
2-L2-059	Hoist Bay	3	Circulation Equipment Storage Bays	28	16	Adjacent Space Transfer	None	No	None	Central General Extract	0	8	Negative	None	n/a	n/a	200	n/a	None	A	80	Automatic Controls	Floor 0m
2-L2-060	WC: Staff	1	Toilet	28	18	Adjacent Space Transfer Air	None	No	None	Central Dirty Extract	0	10	Negative	None	n/a	41	200	n/a	None	A	80	Automatic Controls	Floor 0m
2-L2-061	WC: Staff	1	Toilet	28	18	Adjacent Space Transfer Air	None	No	None	Central Dirty Extract	0	10	Negative	None	n/a	41	200	n/a	None	A	80	Automatic Controls	Floor 0m
2-L2-062	Ward Kitchen	1	Ward Kitchen	28	18	Radiant Panels	Remote Sensor Adj.	Yes	Ceiling Cassette - Chilled Water	Central General Extract	0	6	Negative	None	43	60	500	n/a	None	A	80	Switch	General working plane 1m
2-L2-063	Touchdown Base	7	staff base	28	18	Radiant Panels	Remote Sensor Adj.	Yes	Comfort Cooled Fresh Air	Central Supply Air	2 people at 10l/s/per person (13ach)	0	Positive	F7	43	n/a	200/300	n/a	1000	A	80	Switch / Dimmer	General working plane 1m
2-L2-064	Mobile X-Ray Bay	1	Circulation Equipment Storage Bays	28	16	Adjacent Space Transfer Air	None	No	None	Central General Extract	0	3	n/a	None	n/a	n/a	200	n/a	None	A	80	Automatic Controls	Floor 0m
2-L2-065	WC: Staff	1	Toilet	28	18	Adjacent Space Transfer Air	None	No	None	Central Dirty Extract	0	10	Negative	None	n/a	41	200	n/a	None	A	80	Automatic Controls	Floor 0m
2-L2-066	WC: Staff	1	Toilet	28	18	Adjacent Space Transfer Air	None	No	None	Central Dirty Extract	0	10	Negative	None	n/a	41	200	n/a	None	A	80	Automatic Controls	Floor 0m
2-L2-067	Clinical Supplies Store	1	Storage Area Equipment	28	16	Adjacent Space Transfer Air	None	No	None	Central General Extract	0	3	Negative	None	n/a	n/a	200	n/a	None	A	80	Automatic Controls	Floor 0m
2-L2-068	WC: Independent Wheelchair	1	Toilet	28	18	Adjacent Space Transfer Air	None	No	None	Central Dirty Extract	0	10	Negative	None	n/a	41	200	n/a	None	A	80	Automatic Controls	Floor 0m
2-L2-069	Teaching Room	1	Classroom	28	18	Radiant Panels	Remote Sensor Adj.	Yes	Ceiling Cassette - Chilled Water	Central Supply and Extract	9 people at 10 l/s per person (6ach)	9 people at 10 l/s per person (6ach)	Balanced	F7	43	n/a	300	n/a	None	A	80	Switch	Desk 0.75 to 0.85m
2-L2-070	Disposal Hold	1	Disposal Hold	28	16	Adjacent Space Transfer Air	None	No	None	Central Dirty Extract	0	6	Negative	None	n/a	n/a	200	n/a	None	A	80	Automatic Controls	Floor 0m
2-L2-071	WC:Ambulant	1	Toilet	28	18	Adjacent Space Transfer Air	None	No	None	Central Dirty Extract	0	10	Negative	None	n/a	41	200	n/a	None	A	80	Automatic Controls	Floor 0m
2-L2-072	WC: Ambulant	1	Toilet	28	18	Adjacent Space Transfer Air	None	No	None	Central Dirty Extract	0	10	Negative	None	n/a	41	200	n/a	None	A	80	Automatic Controls	Floor 0m
2-L2-073	Reception	1	Reception	28	18	Adjacent Space Transfer Air	None	Yes	Wall Mounted Unit	Central Supply and Extract	1 people at 10l/s/per person (4ach)	1 people at 10l/s/per person (4ach)	Balanced	F7	n/a	n/a	300	n/a	None	A	80	None	Desk 0.75 to 0.85m
2-L2-074	Waiting Area	1	Waiting Room	28	18	Radiant Panels	Remote Sensor Adj.	Yes	Comfort Cooled Fresh Air	Central Supply and Extract	9 people at 10l/s/per person (7ach)	9 people at 10l/s/per person (7ach)	Balanced	F7	43	n/a	300	n/a	None	A	80	Switch	Floor 0m
2-L2-075	Multi-disciplinary Office	1	Multi Disciplinary Work Areas	28	18	Radiant Panels	Remote Sensor Adj.	Yes	Ceiling Cassette - Chilled Water	Central Supply and Extract	4	3	Positive	F7	43	n/a	400	n/a	None	A	80	Switch	Desk 0.75 to 0.85m
2-L2-076	Ward Management Office	1	Cellular / Ward Offices	28	18	Radiant Panels	Remote Sensor Adj.	Yes	Ceiling Cassette - Chilled Water	Central Supply and Extract	3 people at 10l/s/per person (4ach)	3 people at 10l/s/per person (4ach)	Balanced	F7	43	n/a	400	n/a	None	A	80	Switch	Desk 0.75 to 0.85m
2-L2-077	Interview Room	1	Meeting Room	25	18	Radiant Panels	Remote Sensor Adj.	Yes	Ceiling Cassette - Chilled Water	Central Supply and Extract	4 people at 10 l/s per person (6ach)	4 people at 10 l/s per person (6ach)	Balanced	F7	43	n/a	300	n/a	None	A	80	Switch	Desk 0.75 to 0.85m
2-L2-078	Ward Kitchen	1	Ward Kitchen	28	18	Adjacent Space Transfer Air	None	No	None	Central General Extract	0	6	Negative	None	n/a	60	500	n/a	None	A	80	Switch	General working plane 1m
2-L2-079	Clean Utility	1	Clean Utility	28	18	Radiant Panels	Remote Sensor Adj.	Yes	Comfort Cooled Fresh Air	Central Supply Air	6	0	Positive	F7	43	41	150	n/a	None	A	80	Automatic Controls	General working plane 1m
2-L2-080	Assisted Bathroom	1	Bathroom	28	20	Radiant Panels	Remote Sensor Adj.	No	None	Central Dirty Extract	0	10	Negative	None	43	41	200	n/a	None	A	80	Switch	Floor 0m
2-L2-081	Sitting Room	1	Common room/staff room/lounge	28	18	Radiant Panels	Remote Sensor Adj.	Yes	Comfort Cooled Fresh Air	Central Supply and Extract	6	8	Negative	F7	43	n/a	300	n/a	None	A	80	Switch	Floor 0m
2-L2-082	Single Bedroom	1	Bedroom	28	18	Radiant Panels	Remote Sensor Adj.	Yes	Comfort Cooled Fresh Air	Natural & Central Supply Air	4	via ensuite	Balanced	F7	43	41	100	5	300	A	80	Switch / Dimmer	Bed / Trolley 1.45m
2-L2-083	Shower Room:en-suite	1	Bathroom	28	20	Radiant Panels	Remote Sensor Adj.	No	None	Central Dirty Extract	0	10	Negative	None	43	41	200	n/a	None	A	80	Automatic Controls	Floor 0m
2-L2-084	Single Bedroom	1	Bedroom	28	18	Radiant Panels	Remote Sensor Adj.	Yes	Comfort Cooled Fresh Air	Natural & Central Supply Air	4	via ensuite	Balanced	F7	43	41	100	5	300	A	80	Switch / Dimmer	Bed / Trolley 1.45m
2-L2-085	Shower Room:en-suite	1	Bathroom	28	20	Radiant Panels	Remote Sensor Adj.	No	None	Central Dirty Extract	0	10	Negative	None	43	41	200	n/a	None	A	80	Automatic Controls	Floor 0m
2-L2-086	Touchdown Base	1	staff base	28	18	Adjacent Space Transfer Air	None	Yes	Comfort Cooled Fresh Air	Central Supply and Extract	2 people at 10l/s/per person (13ach)	2 people at 10l/s per person	Balanced	F7	n/a	n/a	200/300	n/a	1000	A	80	Switch / Dimmer	General working plane 1m
2-L2-087	Single Bedroom	1	Bedroom	28	18	Radiant Panels	Remote Sensor Adj.	Yes	Comfort Cooled Fresh Air	Natural & Central Supply Air	4	via ensuite	Balanced	F7	43	41	100	5	300	A	80	Switch / Dimmer	Bed / Trolley 1.45m
2-L2-088	Shower Room:en-suite	1	Bathroom	28	20	Radiant Panels	Remote Sensor Adj.	No	None	Central Dirty Extract	0	Minimum 10	Negative	None	43	41	200	n/a	None	A	80	Automatic Controls	Floor 0m
2-L2-089	Hoist Bay	1	Circulation Equipment Storage Bays	28	16	Adjacent Space Transfer	None	No	None	Central General Extract	0	3	Negative	None	n/a	n/a	200	n/a	None	A	80	Automatic Controls	Floor 0m
2-L2-090	Single Bedroom	1	Bedroom	28	18	Radiant Panels	Remote Sensor Adj.	Yes	Comfort Cooled Fresh Air	Natural & Central Supply Air	4	via ensuite	Balanced	F7	43	41	100	5	300	A	80	Switch / Dimmer	Bed / Trolley 1.45m
2-L2-091	Shower Room:en-suite	1	Bathroom	28	20	Adjacent Space Transfer Air	None	No	None	Central Dirty Extract	0	Minimum 10	Negative	None	n/a	41	200	n/a	None	A	80	Automatic Controls	Floor 0m
2-L2-092	Single Bedroom	1	Bedroom	28	18	Radiant Panels	Remote Sensor Adj.	Yes	Comfort Cooled Fresh Air	Natural & Central Supply Air	4	via ensuite	Balanced	F7	43	41	100	5	300	A	80	Switch / Dimmer	Bed / Trolley 1.45m
2-L2-093	Shower Room:en-suite	1	Bathroom	28	20	Radiant Panels	Remote Sensor Adj.	No	None	Central Dirty Extract	0	Minimum 10	Negative	None	43	41	200	n/a	None	A	80	Automatic Controls	Floor 0m
2-L2-094	Single Bedroom	1	Bedroom	28	18	Radiant Panels	Remote Sensor Adj.	Yes	Comfort Cooled Fresh Air	Natural & Central Supply Air	4	via ensuite	Balanced	F7	43	41	100	5	300	A	80	Switch / Dimmer	Bed / Trolley 1.45m
2-L2-095	Shower Room:en-suite	1	Bathroom	28	20	Adjacent Space Transfer Air	None	No	None	Central Dirty Extract	0	Minimum 10	Negative	None	n/a	41	200	n/a	None	A	80	Automatic Controls	Floor 0m
2-L2-096	Shower Room:en-suite	1	Bathroom	28	20	Radiant Panels	Remote Sensor Adj.	No	None	Central Dirty Extract	0	Minimum 10	Negative	None	43	41	200	n/a	None	A	80	Automatic Controls	Floor 0m
2-L2-097	Single Bedroom	1	Bedroom	28	18	Radiant Panels	Remote Sensor Adj.	Yes	Comfort Cooled Fresh Air	Natural & Central Supply Air	4	via ensuite	Balanced	F7	43	41	100	5	300	A	80	Switch / Dimmer	Bed / Trolley 1.45m
2-L2-098	Hoist Bay	1	Circulation Equipment Storage Bays	28	16	Adjacent Space Transfer	None	No	None	Central General Extract	0	3	Negative	None	n/a	n/a	200	n/a	None	A	80	Automatic Controls	Floor 0m
2-L2-099	Resuscitation Trolley Bay	1	Resus Trolley bay	28	16	Adjacent Space Transfer	None	No	None	Central General Extract	0	3	Negative	None	n/a	n/a	200	n/a	None	A	80	Automatic Controls	Floor 0m

Room No.	Room Name	Qty	Room Function	Temp (max)	Temp (min)	Heating Type	Heating Control	Cooling (present)	Cooling (type)	Ventilation (type)	Supply (ac/hr)	Extract (ac/hr)	Relative pressure	Min filtration	Surface temp	Water temp	Normal lux	Night lux	Local lux	Standby grade	Colour render	Control	Plane
2-L2-100	Touchdown Base	1	staff base	28	18	Radiant Panels	Remote Sensor Adj.	Yes	Comfort Cooled Fresh Air	Central Supply Air & Extract	2 people at 10l/s/per person (13ach)	2 people at 10l/s/per person (13ach)	Balanced	F7	43	n/a	200/300	n/a	1000	A	80	Switch / Dimmer	General working plane 1m
2-L2-101	Touchdown Base	1	staff base	28	18	Radiant Panels	Remote Sensor Adj.	Yes	Comfort Cooled Fresh Air	Central Supply & Extract	2 people at 10l/s/per person (13ach)	2 people at 10l/s/per person (13ach)	Balanced	F7	43	n/a	200/300	n/a	1000	A	80	Switch / Dimmer	General working plane 1m
2-L2-102	Single Bedroom	1	Bedroom	28	18	Radiant Panels	Remote Sensor Adj.	Yes	Comfort Cooled Fresh Air	Natural & Central Supply Air	4	via ensuite	Balanced	F7	43	41	100	5	300	A	80	Switch / Dimmer	Bed / Trolley 1.45m
2-L2-103	Shower Room:en-suite	1	Bathroom	28	20	Adjacent Space Transfer Air	None	No	None	Central Dirty Extract	0	Minimum 10	Negative	None	n/a	41	200	n/a	None	A	80	Automatic Controls	Floor 0m
2-L2-104	Single Bedroom	1	Bedroom	28	18	Radiant Panels	Remote Sensor Adj.	Yes	Comfort Cooled Fresh Air	Natural & Central Supply Air	4	via ensuite	Balanced	F7	43	41	100	5	300	A	80	Switch / Dimmer	Bed / Trolley 1.45m
2-L2-105	Shower Room:en-suite	1	Bathroom	28	20	Radiant Panels	Remote Sensor Adj.	No	None	Central Dirty Extract	0	Minimum 10	Negative	None	43	41	200	n/a	None	A	80	Automatic Controls	Floor 0m
2-L2-106	Single Bedroom	1	Bedroom	28	18	Radiant Panels	Remote Sensor Adj.	Yes	Comfort Cooled Fresh Air	Natural & Central Supply Air	4	via ensuite	Balanced	F7	43	41	100	5	300	A	80	Switch / Dimmer	Bed / Trolley 1.45m
2-L2-107	Shower Room:en-suite	1	Bathroom	28	20	Radiant Panels	Remote Sensor Adj.	No	None	Central Dirty Extract	0	Minimum 10	Negative	None	43	41	200	n/a	None	A	80	Automatic Controls	Floor 0m
2-L2-108	Single Bedroom	1	Bedroom	28	18	Radiant Panels	Remote Sensor Adj.	Yes	Comfort Cooled Fresh Air	Natural & Central Supply Air	4	via ensuite	Balanced	F7	43	41	100	5	300	A	80	Switch / Dimmer	Bed / Trolley 1.45m
2-L2-109	Shower Room:en-suite	1	Bathroom	28	20	Adjacent Space Transfer Air	None	No	None	Central Dirty Extract	0	Minimum 10	Negative	None	n/a	41	200	n/a	None	A	80	Automatic Controls	Floor 0m
2-L2-110	Shower Room:en-suite	1	Bathroom	28	20	Adjacent Space Transfer Air	None	No	None	Central Dirty Extract	0	Minimum 10	Negative	None	n/a	41	200	n/a	None	A	80	Automatic Controls	Floor 0m
2-L2-111	Single Bedroom	1	Bedroom	28	18	Radiant Panels	Remote Sensor Adj.	Yes	Comfort Cooled Fresh Air	Natural & Central Supply Air	4	via ensuite	Balanced	F7	43	41	100	5	300	A	80	Switch / Dimmer	Bed / Trolley 1.45m
2-L2-112	Hoist Bay	1	Circulation Equipment Storage Bays	28	16	Adjacent Space Transfer	None	No	None	Central General Extract	0	3	Negative	None	n/a	n/a	200	n/a	None	A	80	Automatic Controls	Floor 0m
2-L2-113	Single Bedroom	1	Bedroom	28	18	Radiant Panels	Remote Sensor Adj.	Yes	Comfort Cooled Fresh Air	Natural & Central Supply Air	4	via ensuite	Balanced	F7	43	41	100	5	300	A	80	Switch / Dimmer	Bed / Trolley 1.45m
2-L2-114	Shower Room:en-suite	1	Bathroom	28	20	Adjacent Space Transfer Air	None	No	None	Central Dirty Extract	0	Minimum 10	Negative	None	n/a	41	200	n/a	None	A	80	Automatic Controls	Floor 0m
2-L2-115	Touchdown Base	1	staff base	28	18	Radiant Panels	Remote Sensor Adj.	Yes	Comfort Cooled Fresh Air	Central Supply Air	2 people at 10l/s/per person (13ach)	0	Positive	F7	43	n/a	200/300	n/a	1000	A	80	Switch / Dimmer	General working plane 1m
2-L2-117	Single Bedroom	1	Bedroom	28	18	Radiant Panels	Remote Sensor Adj.	Yes	Comfort Cooled Fresh Air	Natural & Central Supply Air	4	via ensuite	Balanced	F7	43	41	100	5	300	A	80	Switch / Dimmer	Bed / Trolley 1.45m
2-L2-118	Shower Room:en-suite	1	Bathroom	28	20	Radiant Panels	Remote Sensor Adj.	No	None	Central Dirty Extract	0	Minimum 10	Negative	None	43	41	200	n/a	None	A	80		or 0m
2-L2-119	Single Bedroom	1	Bedroom	28	18	Radiant Panels	Remote Sensor Adj.	Yes	Comfort Cooled Fresh Air	Natural & Central Supply Air	4	via ensuite	Balanced	F7	43	41	100	5	300	A	80		olley 1.45m
2-L2-120	Shower Room:en-suite	1	Bathroom	28	20	Adjacent Space Transfer Air	None	No	None	Central Dirty Extract	0	Minimum 10	Negative	None	n/a	41	200	n/a	None	A	80		or 0m
2-L2-121	Single Bedroom	1	Bedroom	28	18	Radiant Panels	Remote Sensor Adj.	Yes	Comfort Cooled Fresh Air	Natural & Central Supply Air	4	via ensuite	Balanced	F7	43	41	100	5	300	A	80	Switch / Dimmer	Bed / Trolley 1.45m
2-L2-122	Shower Room:en-suite	1	Bathroom	28	20	Radiant Panels	Remote Sensor Adj.	No	None	Central Dirty Extract	0	Minimum 10	Negative	None	43	41	200	n/a	None	A	80	Automatic Controls	Floor 0m
2-L2-123	Single Bedroom	1	Bedroom	28	18	Radiant Panels	Remote Sensor Adj.	Yes	Comfort Cooled Fresh Air	Natural & Central Supply Air	4	via ensuite	Balanced	F7	43	41	100	5	300	A	80	Switch / Dimmer	Bed / Trolley 1.45m
2-L2-124	Shower Room:en-suite	1	Bathroom	28	20	Adjacent Space Transfer Air	None	No	None	Central Dirty Extract	0	Minimum 10	Negative	None	n/a	41	200	n/a	None	A	80	Automatic Controls	Floor 0m
2-L2-125	Single Bedroom	1	Bedroom	28	18	Radiant Panels	Remote Sensor Adj.	Yes	Comfort Cooled Fresh Air	Natural & Central Supply Air	4	via ensuite	Balanced	F7	43	41	100	5	300	A	80	Switch / Dimmer	Bed / Trolley 1.45m
2-L2-126	Shower Room:en-suite	1	Bathroom	28	20	Radiant Panels	Remote Sensor Adj.	No	None	Central Dirty Extract	0	Minimum 10	Negative	None	43	41	200	n/a	None	A	80	Automatic Controls	Floor 0m
2-L2-127	Dirty Utility	1	Dirty utility	28	18	Adjacent Space Transfer Air	None	No	None	Central Dirty Extract	0	6	Negative	None	n/a	41	200	n/a	None	A	80	Automatic Controls	Floor 0m
2-L2-128	DSR	1	DSR	28	18	Adjacent Space Transfer Air	None	No	None	Central Dirty Extract	0	6	Negative	None	n/a	60	100	n/a	None	A	80	Automatic Controls	Floor 0m
2-L2-129	Touchdown Base	1	staff base	28	18	Radiant Panels	Remote Sensor Adj.	Yes	Comfort Cooled Fresh Air	Central Supply Air	2 people at 10l/s/per person (13ach)	0	Positive	F7	43	n/a	200/300	n/a	1000	A	80	Switch / Dimmer	General working plane 1m
2-L2-130	Single Bedroom	1	Bedroom	28	18	Radiant Panels	Remote Sensor Adj.	Yes	Comfort Cooled Fresh Air	Natural & Central Supply Air	4	via ensuite	Balanced	F7	43	41	100	5	300	A	80	Switch / Dimmer	Bed / Trolley 1.45m
2-L2-131	Shower Room:en-suite	1	Bathroom	28	20	Adjacent Space Transfer Air	None	No	None	Central Dirty Extract	0	Minimum 10	Negative	None	n/a	41	200	n/a	None	A	80	Automatic Controls	Floor 0m
2-L2-132	Single Bedroom	1	Bedroom	28	18	Radiant Panels	Remote Sensor Adj.	Yes	Comfort Cooled Fresh Air	Natural & Central Supply Air	4	via ensuite	Balanced	F7	43	41	100	5	300	A	80	Switch / Dimmer	Bed / Trolley 1.45m
2-L2-133	Shower Room:en-suite	1	Bathroom	28	20	Radiant Panels	Remote Sensor Adj.	No	None	Central Dirty Extract	0	Minimum 10	Negative	None	43	41	200	n/a	None	A	80	Automatic Controls	Floor 0m
2-L2-134	Isolation Bedroom Entrance Lobby	1	Isolation Lobby	28	21	Warm Air - Reheat Battery	Local / BMS Adjustable	Yes	Comfort Cooled Fresh Air	Central Supply	47	0	Positive	H14	n/a	41	200	n/a	None	A	80	Automatic Controls	Floor 0m
2-L2-135	Single Isolation Bedroom	1	Isolation Bedroom	28	21	Adjacent Space Transfer Air	BMS Adjustable Sensor	Yes	Comfort Cooled Fresh Air	Supply via lobby	10	10 via the ensuite	Balanced	H14	n/a	41	100	5	300	A	80	Switch / Dimmer	Bed / Trolley 1.45m
2-L2-136	Isolation Shower Room	1	Isolation Shower Room Ensuite	28	20	Adjacent Space Transfer Air	None	No	None	Dirty Extract	0	47	Negative	None	n/a	41	150 (KNX)	n/a	None	A	80	Automatic Controls	Floor 0m
2-L2-137	Touchdown Base	1	staff base	28	18	Radiant Panels	Remote Sensor Adj.	Yes	Comfort Cooled Fresh Air	Central Supply Air	2 people at 10l/s/per person (13ach)	0	Positive	F7	43	n/a	200/300	n/a	1000	A	80	Switch / Dimmer	General working plane 1m
2-L2-138	Shower Room:en-suite	1	Bathroom	28	20	Radiant Panels	Remote Sensor Adj.	No	None	Central Dirty Extract	0	Minimum 10	Negative	None	43	41	200	n/a	None	A	80	Automatic Controls	Floor 0m
2-L2-139	Single Bedroom	1	Bedroom	28	18	Radiant Panels	Remote Sensor Adj.	Yes	Comfort Cooled Fresh Air	Natural & Central Supply Air	4	via ensuite	Balanced	F7	43	41	100	5	300	A	80	Switch / Dimmer	Bed / Trolley 1.45m
2-L2-140	Single Bedroom	1	Bedroom	28	18	Radiant Panels	Remote Sensor Adj.	Yes	Comfort Cooled Fresh Air	Natural & Central Supply Air	4	via ensuite	Balanced	F7	43	41	100	5	300	A	80	Switch / Dimmer	Bed / Trolley 1.45m
2-L2-141	Shower Room:en-suite	1	Bathroom	28	20	Adjacent Space Transfer Air	None	No	None	Central Dirty Extract	0	Minimum 10	Negative	None	n/a	41	200	n/a	None	A	80	Automatic Controls	Floor 0m
2-L2-142	Single Bedroom	1	Bedroom	28	18	Radiant Panels	Remote Sensor Adj.	Yes	Comfort Cooled Fresh Air	Central Supply and Extract	6	6 via bedroom & ensuite	Balanced	F7	43	41	100	5	300	A	80	Switch / Dimmer	Bed / Trolley 1.45m
2-L2-143	Shower Room:en-suite	1	Bathroom	28	20	Adjacent Space Transfer Air	None	No	None	Central Dirty Extract	0	10	Negative	None	n/a	41	200	n/a	None	A	80	Automatic Controls	Floor 0m
2-L2-144	Linen Bay	1	Linen Bay	28	16	Adjacent Space Transfer	None	No	None	None	0	0	n/a	None	n/a	n/a	100 (KNX)	n/a	None	A	80	Automatic Controls	Floor 0m
2-L2-152	Physical Measure	1	Consulting Room	25	18	Radiant Panels	Remote Sensor Adj.	Yes	Comfort Cooled Fresh Air	Central Supply and Extract	3	3	Balanced	F7	43	n/a	300	n/a	1000	A	80	Switch	Bed / Trolley 1.45m
2-L2-153	Store	1	Store	28	18	Adjacent Space Transfer Air	None	No	None	Central General Extract	0	3	Negative	None	n/a	n/a	200/300	n/a	None	A	80	Automatic Controls	Floor 0m

Southwell, Ross:
All rooms with 'Pantry ' room type should state 'Floor 0m' for Plane.

Southwell, Ross:
All rooms with 'Treatment Room' room type should state '1000' for Local Lux levels

Southwell, Ross:
All rooms with 'Treatment Room' room type should state 'Bed / Trolley 1.45m' for Plane

Room No.	Room Name	Qty	Room Function	Temp (max)	Temp (min)	Heating Type	Heating Control	Cooling (present)	Cooling (type)	Ventilation (type)	Supply (ac/hr)	Extract (ac/hr)	Relative pressure	Min filtration	Surface temp	Water temp	Normal lux	Night lux	Local lux	Standby grade	Colour render	Control	Plane
2-L2-001	Corridor	1	Corridor	28	18	Radiant Panels	Remote Sensor Adj.	No	None	None	0	0	n/a	None	43	n/a	200	n/a	None	A	80	Automatic Controls	Floor 0m
2-L2-145	Corridor	1	Corridor	28	18	Radiant Panels	Remote Sensor Adj.	No	None	None	0	0	n/a	None	43	n/a	200	n/a	None	A	80	Automatic Controls	Floor 0m
2-L2-146	Corridor	1	Corridor	28	18	Radiant Panels	Remote Sensor Adj.	No	None	None	0	0	n/a	None	43	n/a	200	n/a	None	A	80	Automatic Controls	Floor 0m
2-L2-147	Corridor	1	Corridor	28	18	Radiant Panels	Remote Sensor Adj.	No	None	None	0	0	n/a	None	43	n/a	200	n/a	None	A	80	Automatic Controls	Floor 0m
2-L2-148	Corridor	1	Corridor	28	18	Radiant Panels	Remote Sensor Adj.	No	None	None	0	0	n/a	None	43	n/a	200	n/a	None	A	80	Automatic Controls	Floor 0m
2-L2-151	Corridor	1	Corridor	28	18	Radiant Panels	Remote Sensor Adj.	No	None	None	0	0	n/a	None	43	n/a	200	n/a	None	A	80	Automatic Controls	Floor 0m
2-L2-149	Switch Cup	1	Switch Cup	Not Controlled	Not Controlled	None	None	No	None	None	0	0	n/a	None	n/a	n/a	100	n/a	None	A	80	Automatic Controls	Floor 0m
2-L2-150	Switch Cup	1	Switch Cup	Not Controlled	Not Controlled	None	None	No	None	None	0	0	n/a	None	n/a	n/a	100	n/a	None	A	80	Automatic Controls	Floor 0m
2-L2-154	Switch Cup	1	Switch Cup	Not Controlled	Not Controlled	None	None	No	None	None	0	0	n/a	None	n/a	n/a	100	n/a	None	A	80	Automatic Controls	Floor 0m
G-M1-002	Consult/Examination	1	Consulting Room	25	18	Radiant Panels	Remote Sensor Adj.	Yes	Ceiling Cassette - Chilled Water	Central Supply and Extract	3	3	Balanced	F7	43	41	300	n/a	1000	A	80	Switch	Bed / Trolley 1.45m
G-M1-003	Consult/Examination	1	Consulting Room	25	18	Radiant Panels	Remote Sensor Adj.	Yes	Ceiling Cassette - Chilled Water	Central Supply and Extract	3	3	Balanced	F7	43	41	300	n/a	1000	A	80	Switch	Bed / Trolley 1.45m
G-M1-004	Nurse Base	1	staff base	28	18	Radiant Panels	Remote Sensor Adj.	No	None	Central Supply and Extract	1 person at 10l/s/per person (7ach)	1 person at 10l/s/per person (7ach)	Balanced	F7	43	n/a	200/300	n/a	1000	A	80	Switch / Dimmer	Desk 0.75 to 0.85m
G-M1-005	WC - Wheelchair accessible	1	Toilet	28	18	Adjacent Space Transfer Air	None	No	None	Central Dirty Extract	0	10	Negative	None	n/a	41	200	n/a	None	A	80	Automatic Controls	Floor 0m
G-M1-006	Linen Bay	1	Linen Bay	28	16	Adjacent Space Transfer	None	No	None	None	0	0	n/a	None	n/a	n/a	100	n/a	None	A	80	Automatic Controls	Floor 0m
G-M1-007	Consult/Examination	1	Consulting Room	25	18	Radiant Panels	Remote Sensor Adj.	Yes	Ceiling Cassette - Chilled Water	Central Supply and Extract	3	3	Balanced	F7	43	41	300	n/a	1000	A	80	Switch	Bed / Trolley 1.45m
G-M1-008	Physical Measurement	1	Consulting Room	25	18	Radiant Panels	Remote Sensor Adj.	Yes	Comfort Cooled Fresh Air	Central Supply and Extract	3	3	Balanced	F7	43	n/a	300	n/a	1000	A	80	Switch	Bed / Trolley 1.45m
G-M1-009	Consult/Examination	1	Consulting Room	25	18	Radiant Panels	Remote Sensor Adj.	Yes	Ceiling Cassette - Chilled Water	Central Supply and Extract	3	3	Balanced	F7	43	41	300	n/a	1000	A	80	Switch	Bed / Trolley 1.45m
G-M1-010	Pre Op Clinic Team Office (3 person)	1	Cellular / Ward Offices	28	18	Radiant Panels	Remote Sensor Adj.	Yes	Comfort Cooled Fresh Air	Central Supply and Extract	6	4	Positive	F7	43	n/a	400	n/a	None	A	80	Switch	Desk 0.75 to 0.85m
G-M1-011	Consult/Examination	1	Consulting Room	25	18	Radiant Panels	Remote Sensor Adj.	Yes	Ceiling Cassette - Chilled Water	Central Supply and Extract	3	3	Balanced	F7	43	41	300	n/a	1000	A	80	Switch	Bed / Trolley 1.45m
G-M1-012	Consult/Multi-Disciplinary	1	Consulting Room	25	18	Radiant Panels	Remote Sensor Adj.	Yes	Ceiling Cassette - Chilled Water	Central Supply and Extract	6	4	Positive	F7	43	41	300	n/a	1000	A	80	Switch	Bed / Trolley 1.45m
G-M1-013	Consult/Examination	1	Consulting Room	25	18	Radiant Panels	Remote Sensor Adj.	Yes	Ceiling Cassette - Chilled Water	Central Supply and Extract	3	3	Balanced	F7	43	41	300	n/a	1000	A	80	Switch	Bed / Trolley 1.45m
G-M1-014	Treatment Room (with prep area)	1	Treatment Room	25	18	Radiant Panels	Remote Sensor Adj.	Yes	Wall Mounted Unit	Central Supply Air	10	0	Positive	F7	43	41	500	n/a	1000	A	90	Switch	Bed / Trolley 1.45m
G-M1-015	Consult/Examination	1	Consulting Room	25	18	Radiant Panels	Remote Sensor Adj.	Yes	Ceiling Cassette - Chilled Water	Central Supply and Extract	3	3	Balanced	F7	43	41	300	n/a	1000	A	80	Switch	Bed / Trolley 1.45m
G-M1-016	Clean Utility	1	Clean Utility	28	18	Radiant Panels	Remote Sensor Adj.	Yes	Comfort Cooled Fresh Air	Central Supply Air	6	0	Positive	F7	43	41	150	n/a	None	A	80	Automatic Controls	General working plane 1m
G-M1-017	Consult/Examination	1	Consulting Room	25	18	Radiant Panels	Remote Sensor Adj.	Yes	Ceiling Cassette - Chilled Water	Central Supply and Extract	3	3	Balanced	F7	43	41	300	n/a	1000	A	80	Switch	Bed / Trolley 1.45m
G-M1-018	Consult/Examination	1	Consulting Room	25	18	Radiant Panels	Remote Sensor Adj.	Yes	Ceiling Cassette - Chilled Water	Central Supply and Extract	3	3	Balanced	F7	43	41	300	n/a	1000	A	80	Switch	Bed / Trolley 1.45m
G-M1-019	Consult/Examination	1	Consulting Room	25	18	Radiant Panels	Remote Sensor Adj.	Yes	Ceiling Cassette - Chilled Water	Central Supply and Extract	3	3	Balanced	F7	43	41	300	n/a	1000	A	80	Switch	Bed / Trolley 1.45m
G-M1-020	Consult/Examination	1	Consulting Room	25	18	Radiant Panels	Remote Sensor Adj.	Yes	Ceiling Cassette - Chilled Water	Central Supply and Extract	3	3	Balanced	F7	43	41	300	n/a	1000	A	80	Switch	Bed / Trolley 1.45m
G-M1-021	Consult/Examination	1	Consulting Room	25	18	Radiant Panels	Remote Sensor Adj.	Yes	Ceiling Cassette - Chilled Water	Central Supply and Extract	3	3	Balanced	F7	43	41	300	n/a	1000	A	80	Switch	Bed / Trolley 1.45m
G-M1-022	Consult/Examination	1	Consulting Room	25	18	Radiant Panels	Remote Sensor Adj.	Yes	Ceiling Cassette - Chilled Water	Central Supply and Extract	3	3	Balanced	F7	43	41	300	n/a	1000	A	80	Switch	Bed / Trolley 1.45m
G-M1-023	Consult/Examination	1	Consulting Room	25	18	Radiant Panels	Remote Sensor Adj.	Yes	Ceiling Cassette - Chilled Water	Central Supply and Extract	3	3	Balanced	F7	43	41	300	n/a	1000	A	80	Switch	Bed / Trolley 1.45m
G-M1-024	Consult/Examination	1	Consulting Room	25	18	Radiant Panels	Remote Sensor Adj.	Yes	Ceiling Cassette - Chilled Water	Central Supply and Extract	3	3	Balanced	F7	43	41	300	n/a	1000	A	80	Switch	Bed / Trolley 1.45m
G-M1-025	Consult/Examination	1	Consulting Room	25	18	Radiant Panels	Remote Sensor Adj.	Yes	Ceiling Cassette - Chilled Water	Central Supply and Extract	3	3	Balanced	F7	43	41	300	n/a	1000	A	80	Switch	Bed / Trolley 1.45m
G-M1-027	Consult/Multi-Disciplinary	1	Consulting Room	25	18	Radiant Panels	Remote Sensor Adj.	Yes	Ceiling Cassette - Chilled Water	Central Supply and Extract	6	4	Positive	F7	43	41	300	n/a	1000	A	80	Switch	Bed / Trolley 1.45m
G-M1-028	Dirty Utility: urine test	1	Dirty utility	28	18	Adjacent Space Transfer Air	None	No	None	Central Dirty Extract	0	6	Negative	None	n/a	41	200	n/a	None	A	80	Automatic Controls	Floor 0m
G-M1-029	Outpatients Management Office	1	Cellular / Ward Offices	28	18	Radiant Panels	Remote Sensor Adj.	Yes	Ceiling Cassette - Chilled Water	Central Supply and Extract	4	3	Positive	F7	43	n/a	400	n/a	None	A	80	Switch	Desk 0.75 to 0.85m
G-M1-031	Nurse Base	1	staff base	28	18	Adjacent Space Transfer Air	None	Yes	Comfort Cooled Fresh Air	Central Supply Air	1 person at 10l/s/per person (8ach)	0	Positive	F7	n/a	n/a	200/300	n/a	1000	A	80	Switch / Dimmer	Desk 0.75 to 0.85m
G-M1-032	Main Waiting	1	Waiting Room	28	18	Radiant Panels	Remote Sensor Adj.	Yes	Comfort Cooled Fresh Air	Central Supply and Extract	35 person at 10l/s/per person (8ach)	35 person at 10l/s/per person (8ach)	Balanced	F7	43	n/a	300	n/a	None	A	80	Switch	Floor 0m
G-M1-034	WC - Staff	1	Toilet	28	18	Adjacent Space Transfer Air	None	No	None	Central Dirty Extract	0	10	Negative	None	n/a	41	200	n/a	None	A	80	Automatic Controls	Floor 0m
G-M1-035	WC - Staff	1	Toilet	28	18	Adjacent Space Transfer Air	None	No	None	Central Dirty Extract	0	10	Negative	None	n/a	41	200	n/a	None	A	80	Automatic Controls	Floor 0m
G-M1-036	Staff Room	1	Common room/staff room/lounge	28	18	Radiant Panels	Remote Sensor Adj.	Yes	Comfort Cooled Fresh Air	Central Supply and Extract	6	8	Negative	F7	43	n/a	300	n/a	None	A	80	Switch	Floor 0m
G-M1-037	Store: Clinical Supplies, Equipment & Stationery	1	Storage Area Equipment	28	16	Radiant Panels	Remote Sensor Adj.	No	None	Central General Extract	0	3	Negative	None	43	n/a	200	n/a	None	A	80	Automatic Controls	Floor 0m
G-M1-038	Disposal Hold	1	Disposal Hold	28	16	Adjacent Space Transfer Air	None	No	None	Central Dirty Extract	0	6	Negative	None	n/a	n/a	200	n/a	None	A	80	Automatic Controls	Floor 0m
G-M1-039	WC Fully Accessible Changing Room	1	Changing Facilities	28	18	Radiant Panels	Remote Sensor Adj.	Yes	Comfort Cooled Fresh Air	Central General Extract	0	10	Negative to corridor	None	43	41	100	n/a	None	A	80	Automatic Controls	Floor 0m
G-M1-040	Physical Measurement	1	Consulting Room	25	18	Radiant Panels	Remote Sensor Adj.	No	None	None	0	0	n/a	None	43	n/a	300	n/a	1000	A	80	Switch	Bed / Trolley 1.45m
G-M1-041	Store - Equipment / General	1	Storage Area Equipment	28	16	Adjacent Space Transfer Air	None	No	None	Central General Extract	0	3	Negative	None	n/a	n/a	200	n/a	None	A	80	Automatic Controls	Floor 0m
G-M1-042	Phlebotomy Room	1	Consulting Room	25	18	Radiant Panels	Remote Sensor Adj.	Yes	Ceiling Cassette - Chilled Water	Central Supply and Extract	2 people at 10 l/s per person (4ach)	2 people at 10 l/s per person (4ach)	Balanced	F7	43	41	300	n/a	1000	A	80	Switch	Bed / Trolley 1.45m
G-M1-043	Public Telephone Booth	1	Circulation Phone Booth	28	18	Adjacent Space Transfer	None	No	None	None	0	0	n/a	None	n/a	n/a	200	n/a	None	A	80	Automatic Controls	Floor 0m
G-M1-045	WC - Wheelchair accessible	1	Toilet	28	18	Adjacent Space Transfer Air	None	No	None	Central Dirty Extract	0	10	Negative	None	n/a	41	200	n/a	None	A	80	Automatic Controls	Floor 0m
G-M1-046	Medical Records Store	1	Cellular / Ward Offices	28	18	Radiant Panels	Remote Sensor Adj.	Yes	Comfort Cooled Fresh Air	Central Supply and Extract	4	3	Positive	F7	43	n/a	400	n/a	None	A	80	Automatic Controls	Desk 0.75 to 0.85m

Room No.	Room Name	Qty	Room Function	Temp (max)	Temp (min)	Heating Type	Heating Control	Cooling (present)	Cooling (type)	Ventilation (type)	Supply (ac/hr)	Extract (ac/hr)	Relative pressure	Min filtration	Surface temp	Water temp	Normal lux	Night lux	Local lux	Standby grade	Colour render	Control	Plane
G-M1-047	Enquiry / Information Desk: 2 staff	1	Reception	28	18	Radiant Panels	Remote Sensor Adj.	Yes	Ceiling Cassette - Chilled Water	Central Supply and Extract	2 people at 10 l/s per person (2ach)	2 people at 10 l/s per person (2ach)	Balanced	F7	43	n/a	300	n/a	None	A	80	Switch	Desk 0.75 to 0.85m
G-M1-049	Patient Interview Room	1	Meeting Room	25	18	Radiant Panels	Remote Sensor Adj.	Yes	Comfort Cooled Fresh Air	Central Supply and Extract	4 people at 10 l/s per person (7ach)	4 people at 10 l/s per person (7ach)	Balanced	F7	43	n/a	300	n/a	None	A	80	Switch	Desk 0.75 to 0.85m
G-M1-050	DSR	1	DSR	28	18	Adjacent Space Transfer Air	None	No	None	Central Dirty Extract	0	6	Negative	None	n/a	60	100	n/a	None	A	80	Automatic Controls	Floor 0m
G-M1-051	Sub Waiting Area	1	Waiting Room	28	18	Radiant Panels	Remote Sensor Adj.	Yes	Ceiling Cassette - Chilled Water	Central Supply and Extract	9 people at 10 l/s per person (7ach)	9 people at 10 l/s per person (7ach)	Balanced	F7	43	n/a	300	n/a	None	A	80	Switch	Floor 0m
G-M1-001	Corridor	1	Corridor	28	18	Radiant Panels	Remote Sensor Adj.	No	None	None	0	0	n/a	None	43	n/a	200	n/a	None	A	80	Automatic Controls	Floor 0m
G-M1-026	Corridor	1	Corridor	28	18	Radiant Panels	Remote Sensor Adj.	No	None	None	0	0	n/a	None	43	n/a	200	n/a	None	A	80	Automatic Controls	Floor 0m
G-M1-030	Corridor	1	Corridor	28	18	Radiant Panels	Remote Sensor Adj.	No	None	None	0	0	n/a	None	43	n/a	200	n/a	None	A	80	Automatic Controls	Floor 0m
G-M1-048	Corridor	1	Corridor	28	18	None	None	No	None	None	0	0	n/a	None	n/a	n/a	200	n/a	None	A	80	Automatic Controls	Floor 0m
G-M1-052	Switch Cup	1	Switch Cup	Not Controlled	Not Controlled	None	None	No	None	None	0	0	n/a	None	n/a	n/a	100	n/a	None	A	80	Automatic Controls	Floor 0m
2-M2-002	Staff Office	1	Cellular / Ward Offices	28	18	Radiant Panels	Remote Sensor Adj.	Yes	Comfort Cooled Fresh Air	Central Supply and Extract	6	4	Positive	F7	43	n/a	400	n/a	None	A	80	Switch	Desk 0.75 to 0.85m
2-M2-003	Reception	1	Reception	28	18	Radiant Panels	Remote Sensor Adj.	Yes	Wall Mounted Unit	Central Supply Air	3	0	Positive	F7	43	n/a	300	n/a	None	A	80	Switch	Desk 0.75 to 0.85m
2-M2-004	Interview Room	1	Meeting Room	25	18	Radiant Panels	Remote Sensor Adj.	Yes	Wall Mounted Unit	Central Supply and Extract	4 people at 10 l/s per person (6ach)	4 people at 10 l/s per person (6ach)	Balanced	F7	43	n/a	300	n/a	None	A	80	Switch	Desk 0.75 to 0.85m
2-M2-005	Interview Room	1	Meeting Room	25	18	Radiant Panels	Remote Sensor Adj.	Yes	Wall Mounted Unit	Central Supply and Extract	4 people at 10 l/s per person (6ach)	4 people at 10 l/s per person (6ach)	Balanced	F7	43	n/a	300	n/a	None	A	80	Switch	Desk 0.75 to 0.85m
2-M2-006	Waiting	1	Waiting Room	28	18	Radiant Panels	Remote Sensor Adj.	Yes	Ceiling Cassette - Chilled Water	Central Supply and Extract	9 people at 10 l/s per person (7ach)	9 people at 10 l/s per person (7ach)	Balanced	F7	43	n/a	300	n/a	None	A	80	Switch	Floor 0m
2-M2-007	ADL Bathroom, Shower, WC with hoists	1	Toilet	28	18	Radiant Panels	Remote Sensor Adj.	No	None	Central Dirty Extract	0	10	Negative	None	43	41	200	n/a	None	A	80	Automatic Controls	Floor 0m
2-M2-008	Physio Treatment Room	1	Physiotherapy Studio	25	18	Radiant Panels	Remote Sensor Adj.	Yes	Ceiling Cassette - Chilled Water	Central Supply and Extract	10	0	Positive	F7	43	41	300	n/a	None	A	80	Switch / Dimmer	Floor 0m
2-M2-009	ADL Kitchen	1	Pantry	28	18	Radiant Panels	Remote Sensor Adj.	Yes	Comfort Cooled Fresh Air	Central General Extract	0	6	Negative	None	43	41	300	n/a	None	A	80	Switch	Floor 0m
2-M2-010	Consult/Examination	1	Consulting Room	25	18	Radiant Panels	Remote Sensor Adj.	Yes	Ceiling Cassette - Chilled Water	Central Supply and Extract	3	3	Balanced	F7	43	41	300	n/a	1000	A	80	Switch	Bed / Trolley 1.45m
2-M2-011	Distraction Free Treatment Room	1	Treatment Room	25	18	Radiant Panels	Remote Sensor Adj.	Yes	Comfort Cooled Fresh Air	Central Supply Air	10	0	Positive	F7	43	41	500	n/a	1000	A	90	Switch	Bed / Trolley 1.45m
2-M2-012	Distraction Free Treatment Room	1	Treatment Room	25	18	Radiant Panels	Remote Sensor Adj.	Yes	Comfort Cooled Fresh Air	Central Supply Air	10	0	Positive	F7	43	41	500	n/a	1000	A	90	Switch	Bed / Trolley 1.45m
2-M2-013	Staff Lockers	1	Changing Facilities	28	18	Adjacent Space Transfer	None	Yes	Comfort Cooled Fresh Air	Central Supply and Extract	5	4	Positive	F7	n/a	n/a	100	n/a	None	A	80	Automatic Controls	Floor 0m
2-M2-014	WC Accessible	1	Toilet	28	18	Adjacent Space Transfer Air	None	No	None	Central Dirty Extract	0	10	Negative	None	n/a	41	200	n/a	None	A	80	Automatic Controls	Floor 0m
2-M2-015	Staff Toilet	1	Toilet	28	18	Adjacent Space Transfer Air	None	No	None	Central Dirty Extract	0	10	Negative	None	n/a	41	200	n/a	None	A	80	Automatic Controls	Floor 0m
2-M2-016	Staff Toilet	1	Toilet	28	18	Adjacent Space Transfer Air	None	No	None	Central Dirty Extract	0	10	Negative	None	n/a	41	200	n/a	None	A	80	Automatic Controls	Floor 0m
2-M2-017	Changing Cubicles	1	Changing Facilities	28	18	Adjacent Space Transfer	None	Yes	Comfort Cooled Fresh Air	Central Supply and Extract	5	4	Positive	F7	n/a	n/a	100	n/a	None	A	80	Automatic Controls	Floor 0m
2-M2-018	Changing Cubicles	1	Changing Facilities	28	18	Adjacent Space Transfer	None	Yes	Comfort Cooled Fresh Air	Central Supply and Extract	5	4	Positive	F7	n/a	n/a	100	n/a	None	A	80	Automatic Controls	Floor 0m
2-M2-019	Changing Cubicles	1	Changing Facilities	28	18	Adjacent Space Transfer	None	Yes	Comfort Cooled Fresh Air	Central Supply and Extract	5	4	Positive	F7	n/a	n/a	100	n/a	None	A	80	Automatic Controls	Floor 0m
2-M2-020	Changing Cubicles	1	Changing Facilities	28	18	Adjacent Space Transfer	None	Yes	Comfort Cooled Fresh Air	Central Supply and Extract	5	4	Positive	F7	n/a	n/a	100	n/a	None	A	80	Automatic Controls	Floor 0m
2-M2-021	Store: General/Equipment	1	Storage Area Equipment	28	16	Radiant Panels	Remote Sensor Adj.	No	None	Central General Extract	0	3	Negative	None	43	n/a	200	n/a	None	A	80	Automatic Controls	Floor 0m
2-M2-022	Patient Toilet	1	Toilet	28	18	Adjacent Space Transfer Air	None	No	None	Central Dirty Extract	0	10	Negative	None	n/a	41	200	n/a	None	A	80	Automatic Controls	Floor 0m
2-M2-023	Multi-Purpose Rehabilitation Room	1	Physiotherapy Studio	25	18	Radiant Panels	Remote Sensor Adj.	Yes	Ceiling Cassette - Chilled Water	Central Supply and Extract	5	6	Negative	F7	43	41	300	n/a	None	A	80	Switch / Dimmer	Floor 0m
2-M2-024	Store: General/Equipment	1	Storage Area Equipment	28	16	Adjacent Space Transfer Air	None	No	None	Central General Extract	0	3	Negative	None	n/a	n/a	200	n/a	None	A	80	Automatic Controls	Floor 0m
2-M2-025	Store: General/Equipment	1	Storage Area Equipment	28	16	Radiant Panels	Remote Sensor Adj.	No	None	Central General Extract	0	3	Negative	None	43	n/a	200	n/a	None	A	80	Automatic Controls	Floor 0m
2-M2-001	Corridor	1	Corridor	28	18	Radiant Panels	Remote Sensor Adj.	No	None	None	0	0	n/a	None	43	n/a	200	n/a	None	A	80	Automatic Controls	Floor 0m
2-M2-026	Switch Cupboard	1	Switch Cup	Not Controlled	Not Controlled	None	None	No	None	None	0	0	n/a	None	n/a	n/a	100	n/a	None	A	80	Automatic Controls	Floor 0m
2-M3-002	Treatment Room	1	Treatment Room	25	18	Radiant Panels	Remote Sensor Adj.	Yes	Comfort Cooled Fresh Air	Central Supply Air	10	0	Positive	F7	43	41	500	n/a	1000	A	90	Switch	Bed / Trolley 1.45m
2-M3-003	Treatment Area	1	Treatment Room	25	18	Radiant Panels	Remote Sensor Adj.	Yes	Comfort Cooled Fresh Air	Central Supply Air	10	0	Positive	F7	43	41	500	n/a	1000	A	90	Switch	Bed / Trolley 1.45m
2-M3-004	Waiting area; 4 & 2 wheelchairs	1	Waiting Room	28	18	Radiant Panels	Remote Sensor Adj.	Yes	Ceiling Cassette - Chilled Water	Central Supply and Extract	5	5	Balanced	F7	43	41	300	n/a	None	A	80	Switch	Floor 0m
2-M3-001	Corridor	1	Corridor	28	18	None	None	No	None	None	0	0	n/a	None	n/a	n/a	200	n/a	None	A	80	Automatic Controls	Floor 0m
2-M4-002	Waiting Area (DCN)	1	Waiting Room	28	18	Radiant Panels	Remote Sensor Adj.	Yes	Comfort Cooled Fresh Air	Central Supply and Extract	5	5	Balanced	F7	43	n/a	300	n/a	None	A	80	Switch	Floor 0m
2-M4-003	Secretarial Office	1	Cellular / Ward Offices	28	18	Radiant Panels	Remote Sensor Adj.	Yes	Comfort Cooled Fresh Air	Central Supply and Extract	4	3	Positive	F7	43	n/a	400	n/a	None	A	80	Switch	Desk 0.75 to 0.85m
2-M4-004	Reporting Room	1	Cellular / Ward Offices	28	18	Radiant Panels	Remote Sensor Adj.	Yes	Comfort Cooled Fresh Air	Central Supply and Extract	6	4	Positive	F7	43	n/a	400	n/a	None	A	80	Switch	Desk 0.75 to 0.85m
2-M4-005	HOD Office	1	Cellular / Ward Offices	28	18	Radiant Panels	Remote Sensor Adj.	Yes	Comfort Cooled Fresh Air	Central Supply and Extract	4	3	Positive	F7	43	n/a	400	n/a	None	A	80	Switch	Desk 0.75 to 0.85m
2-M4-006	WC - wheelchair accessible (DCN)	1	Toilet	28	18	Adjacent Space Transfer Air	None	No	None	Central Dirty Extract	0	10	Negative	None	n/a	41	200	n/a	None	A	80	Automatic Controls	Floor 0m
2-M4-007	Quiet Room	1	Common room/staff room/lounge	28	18	Radiant Panels	Remote Sensor Adj.	Yes	Comfort Cooled Fresh Air	Central Supply and Extract	6	8	Negative	F7	43	41	300	n/a	None	A	80	Switch	Floor 0m
2-M4-008	EMG/Nerve Conduction Room	1	Diagnostic room	25	18	Radiant Panels	Remote Sensor Adj.	Yes	Comfort Cooled Fresh Air	Central Supply and Extract	8	8	Balanced	F7	43	41	300	n/a	1000	A	80	Switch / Dimmer	General working plane 1m
2-M4-009	EMG/Nerve Conduction Room	1	Diagnostic room	25	18	Radiant Panels	Remote Sensor Adj.	Yes	Comfort Cooled Fresh Air	Central Supply and Extract	8	8	Balanced	F7	43	41	300	n/a	1000	A	80	Switch / Dimmer	General working plane 1m
2-M4-011	EMG/Nerve Conduction Room	1	Diagnostic room	25	18	Radiant Panels	Remote Sensor Adj.	Yes	Comfort Cooled Fresh Air	Central Supply and Extract	8	8	Balanced	F7	43	41	300	n/a	1000	A	80	Switch / Dimmer	General working plane 1m

Room No.	Room Name	Qty	Room Function	Temp (max)	Temp (min)	Heating Type	Heating Control	Cooling (present)	Cooling (type)	Ventilation (type)	Supply (ac/hr)	Extract (ac/hr)	Relative pressure	Min filtration	Surface temp	Water temp	Normal lux	Night lux	Local lux	Standby grade	Colour render	Control	Plane
2-M4-012	VTEM/Ambulatory Review Room	1	Diagnostic room	25	18	Radiant Panels	Remote Sensor Adj.	Yes	Ceiling Cassette - Chilled Water	Central Supply and Extract	8	8	Balanced	F7	43	41	300	n/a	1000	A	80	Switch / Dimmer	General working plane 1m
2-M4-013	Clinical Physiologist Room	1	Cellular / Ward Offices	28	18	Radiant Panels	Remote Sensor Adj.	Yes	Comfort Cooled Fresh Air	Central Supply and Extract	6	4	Positive	F7	43	n/a	400	n/a	None	A	80	Switch	Desk 0.75 to 0.85m
2-M4-014	WC - Staff	1	Toilet	28	18	Adjacent Space Transfer Air	None	No	None	Central Dirty Extract	0	10	Negative	None	n/a	41	200	n/a	None	A	80	Automatic Controls	Floor 0m
2-M4-016	Store / Records	1	Storage Area Equipment	28	16	Radiant Panels	Remote Sensor Adj.	No	None	Central General Extract	0	3	Negative	None	43	n/a	200	n/a	None	A	80	Automatic Controls	Floor 0m
2-M4-017	EEG Recording Room	1	Diagnostic room	25	18	Warm Air - Reheat Battery	BMS Adjustable Sensor	Yes	Comfort Cooled Fresh Air	Central Supply and Extract	8	8	Balanced	F7	43	41	300	n/a	1000	A	80	Switch / Dimmer	General working plane 1m
2-M4-018	EEG Recording Room	1	Diagnostic room	25	18	Warm Air - Reheat Battery	BMS Adjustable Sensor	Yes	Comfort Cooled Fresh Air	Central Supply and Extract	8	8	Balanced	F7	43	41	300	n/a	1000	A	80	Switch / Dimmer	General working plane 1m
2-M4-019	EEG Recording Room	1	Diagnostic room	25	18	Warm Air - Reheat Battery	BMS Adjustable Sensor	Yes	Ceiling Cassette - Chilled Water	Central Supply and Extract	8	8	Balanced	F7	43	41	300	n/a	1000	A	80	Switch / Dimmer	General working plane 1m
2-M4-001	Corridor	1	Corridor	28	18	Radiant Panels	Remote Sensor Adj.	No	None	None	0	0	n/a	None	43	n/a	200	n/a	None	A	80	Automatic Controls	Floor 0m
2-M4-020	Corridor	1	Corridor	28	18	Radiant Panels	Remote Sensor Adj.	No	None	Central Supply	1	0	Positive	F7	43	n/a	200	n/a	None	A	80	Automatic Controls	Floor 0m
2-M4-021	Switch Cupboard	1	Switch Cup	Not Controlled	Not Controlled	None	None	No	None	None	0	0	n/a	None	n/a	n/a	100	n/a	None	A	80	Automatic Controls	Floor 0m
2-M4-022	Switch Cupboard	1	Switch Cup	Not Controlled	Not Controlled	None	None	No	None	None	0	0	n/a	None	n/a	n/a	100	n/a	None	A	80	Automatic Controls	Floor 0m
G-N1-001	Reception / Information Desk	1	Reception	28	18	underfloor heating	BMS Adjustable Sensors.	Yes	Ceiling Cassette - Chilled Water	Central Supply Air	4	4	Balanced	F7	43	n/a	300	n/a	None	A	80	None	Desk 0.75 to 0.85m
G-N1-002	Draught Lobby	1	Circulation Areas - Entrance Lobby	28	Not Controlled	Warm Air Door Curtain	BMS Adjustable Sensor	No	None	None	0	0	n/a	None	43	n/a	200	n/a	None	A	80	Automatic Controls	Floor 0m
G-N1-003	WC - Wheelchair accessible	1	Toilet	28	18	Radiant Panels	Remote Sensor Adj.	No	None	Central Dirty Extract	0	10	Negative	None	43	41	200	n/a	None	A	80	Automatic Controls	Floor 0m
G-N1-004	WC - Visitors	1	Toilet	28	18	Radiant Panels	Remote Sensor Adj.	No	None	Central Dirty Extract	0	10	Negative	None	43	41	200	n/a	None	A	80	Automatic Controls	Floor 0m
G-N1-005	Wheelchair Bay	1	Circulation Equipment Storage Bays	28	16	Adjacent Space Transfer Air	None	No	None	None	0	0	n/a	None	n/a	n/a	200	n/a	None	A	80	Automatic Controls	Floor 0m
G-N1-006	Vending Machine	1	Vending Machine	28	16	underfloor heating	BMS Adjustable Sensors.	No	None	None	0	0	n/a	None	43	n/a	200	n/a	None	A	80	Automatic Controls	Floor 0m
G-N1-007	Waiting Area	1	Waiting Room	28	18	underfloor heating	BMS Adjustable Sensors.	Yes	Comfort Cooled Fresh Air	Central Supply and Extract	5	5	Balanced	F7	43	n/a	300	n/a	None	A	80	Switch	Floor 0m
G-N1-008	Manifold	1	Manifold	Not Controlled	Not Controlled	None	None	No	None	None	0	0	n/a	None	n/a	n/a	100	n/a	None	A	80	Automatic Controls	Floor 0m
2-N2-002	Staff Room	1	Common room/staff room/lounge	28	18	Radiant Panels	Remote Sensor Adj.	Yes	Comfort Cooled Fresh Air	Central Supply and Extract	18 people at 10 l/s per person (7ach)	18 people at 10 l/s per person (7ach)	Balanced	F7	43	41	300	n/a	None	A	80	Switch	Floor 0m
2-N2-003	Grab & Go	1	Storage Area Equipment	28	16	Radiant Panels	Remote Sensor Adj.	No	None	Central Supply and Extract	6	8	Negative	F7	43	41	200	n/a	None	A	80	Automatic Controls	Floor 0m
2-N2-004	Disposal Hold (small)	1	Disposal Hold	28	16	Adjacent Space Transfer Air	None	No	None	Central Dirty Extract	0	6	Negative	None	n/a	n/a	200	n/a	None	A	80	Automatic Controls	Floor 0m
2-N2-005	DSR	1	DSR	28	18	Adjacent Space Transfer Air	None	No	None	Central Dirty Extract	0	6	Negative	None	n/a	60	100	n/a	None	A	80	Automatic Controls	Floor 0m
2-N2-001	Corridor	1	Corridor	28	18	Radiant Panels	Remote Sensor Adj.	No	None	None	0	0	n/a	None	43	n/a	200	n/a	None	A	80	Automatic Controls	Floor 0m
1-P1-002	Physical Measurement Bay	1	Consulting Room	25	18	Radiant Panels	Remote Sensor Adj.	Yes	Comfort Cooled Fresh Air	Central Supply and Extract	3	3	Balanced	F7	43	41	300	n/a	1000	A	80	Switch	Bed / Trolley 1.45m
1-P1-003	Single Bedroom	1	Bedroom	28	18	Radiant Panels	Remote Sensor Adj.	Yes	Ceiling Cassette - Chilled Water	Central Supply and Extract	6	6 via bedroom and ensuite	Balanced	F7	43	41	100	5	300	A	80	Switch / Dimmer	Bed / Trolley 1.45m
1-P1-004	En-suite WC / WHB	1	Toilet	28	18	Adjacent Space Transfer Air	None	No	None	Central Dirty Extract	0	10	Negative	None	n/a	41	200	n/a	None	A	80	Automatic Controls	Floor 0m
1-P1-005	Single Bedroom	1	Bedroom	28	18	Radiant Panels	Remote Sensor Adj.	Yes	Ceiling Cassette - Chilled Water	Central Supply and Extract	6	6 via bedroom and ensuite	Balanced	F7	43	41	100	5	300	A	80	Switch / Dimmer	Bed / Trolley 1.45m
1-P1-006	En-suite WC / WHB	1	Toilet	28	18	Adjacent Space Transfer Air	None	No	None	Central Dirty Extract	0	10	Negative	None	n/a	41	200	n/a	None	A	80	Automatic Controls	Floor 0m
1-P1-007	Clinic Room	1	Treatment Room	25	18	Radiant Panels	Remote Sensor Adj.	Yes	Ceiling Cassette - Chilled Water	Central Supply and Extract	4	3	Positive	F7	43	41	500	n/a	1000	A	90	Switch	Bed / Trolley 1.45m
1-P1-008	Clinic Room	1	Treatment Room	25	18	Radiant Panels	Remote Sensor Adj.	Yes	Ceiling Cassette - Chilled Water	Central Supply and Extract	4	3	Positive	F7	43	41	500	n/a	1000	A	90	Switch	Bed / Trolley 1.45m
1-P1-009	Interview Room - DCU	1	Meeting Room	25	18	Radiant Panels	Remote Sensor Adj.	Yes	Ceiling Cassette - Chilled Water	Central Supply and Extract	4 people at 10 l/s per person (7ach)	4 people at 10 l/s per person (7ach)	Balanced	F7	43	n/a	300	n/a	None	A	80	Switch	Desk 0.75 to 0.85m
1-P1-010	Single Bedroom	1	Bedroom	28	18	Radiant Panels	Remote Sensor Adj.	Yes	Ceiling Cassette - Chilled Water	Central Supply and Extract	6	6 via bedroom and ensuite	Balanced	F7	43	41	100	5	300	A	80	Switch / Dimmer	Bed / Trolley 1.45m
1-P1-011	En-suite WC / WHB	1	Toilet	28	18	Adjacent Space Transfer Air	None	No	None	Central Dirty Extract	0	10	Negative	None	n/a	41	200	n/a	None	A	80	Automatic Controls	Floor 0m
1-P1-012	SDCU Discharge Lounge	1	Common room/staff room/lounge	28	18	Radiant Panels	Remote Sensor Adj.	Yes	Ceiling Cassette - Chilled Water	Central Supply and Extract	6	8	Negative	F7	43	41	300	n/a	None	A	80	Switch	Floor 0m
1-P1-013	WC - Wheelchair accessible	1	Toilet	28	18	Adjacent Space Transfer Air	None	No	None	Central Dirty Extract	0	10	Negative	None	n/a	41	200	n/a	None	A	80	Automatic Controls	Floor 0m
1-P1-014	Interview Room - DCU	1	Meeting Room	25	18	Radiant Panels	Remote Sensor Adj.	Yes	Ceiling Cassette - Chilled Water	Central Supply and Extract	4 people at 10 l/s per person (7ach)	4 people at 10 l/s per person (7ach)	Balanced	F7	43	n/a	300	n/a	None	A	80	Switch	Desk 0.75 to 0.85m
1-P1-015	SDCU Dispensary	1	Clean Utility	28	18	Radiant Panels	Remote Sensor Adj.	Yes	Comfort Cooled Fresh Air	Central Supply Air	6	0	Positive	F7	43	41	150	n/a	None	A	80	Automatic Controls	General working plane 1m
1-P1-016	Pantry (DCU)	1	Pantry	28	18	Radiant Panels	Remote Sensor Adj.	Yes	Comfort Cooled Fresh Air	Central Supply and Extract	6	8	Negative	F7	43	41	300	n/a	None	A	80	Switch	Floor 0m
1-P1-017	Wheelchair Parking Bay	1	Circulation Equipment Storage Bays	28	16	Adjacent Space Transfer	None	No	None	Central Supply Air	37	0	Positive	F7	n/a	n/a	200	n/a	None	A	80	Automatic Controls	Floor 0m
1-P1-018	Linen Bay	1	Linen Bay	28	16	Adjacent Space Transfer	None	No	None	None	0	0	n/a	None	n/a	n/a	100 (KNX)	n/a	None	A	80	Automatic Controls	Floor 0m
1-P1-020	WC - Patients	1	Toilet	28	18	Adjacent Space Transfer Air	None	No	None	Central Dirty Extract	0	10	Negative	None	n/a	41	200	n/a	None	A	80	Automatic Controls	Floor 0m
1-P1-021	SDCU Post Op Staff Base/Utility	1	staff base	28	18	Radiant Panels	Remote Sensor Adj.	Yes	Comfort Cooled Fresh Air	Central Supply and Extract	4	3	Positive	F7	43	n/a	200/300	n/a	None	A	80	Switch / Dimmer	Desk 0.75 to 0.85m
1-P1-022	Recovery Clean Utility	1	Clean Utility	28	18	Radiant Panels	Remote Sensor Adj.	Yes	Comfort Cooled Fresh Air	Central Supply Air	6	0	Positive	F7	43	41	150	n/a	None	A	80	Automatic Controls	General working plane 1m
1-P1-023	Recovery Dirty Utility	1	Dirty utility	28	18	Adjacent Space Transfer Air	None	No	None	Central Dirty Extract	0	6	Negative	None	n/a	41	200	n/a	None	A	80	Automatic Controls	Floor 0m

Room No.	Room Name	Qty	Room Function	Temp (max)	Temp (min)	Heating Type	Heating Control	Cooling (present)	Cooling (type)	Ventilation (type)	Supply (ac/hr)	Extract (ac/hr)	Relative pressure	Min filtration	Surface temp	Water temp	Normal lux	Night lux	Local lux	Standby grade	Colour render	Control	Plane
1-P1-024	SDCU Recovery	1	Recovery Bay / Recovery Room	25	20	Radiant Panels	Remote Sensor Adj.	Yes	Comfort Cooled Fresh Air	Central Supply and Extract	15	15	Balanced	F7	43	41	500	n/a	None	A	90	Switch / Dimmer	Bed / Trolley 1.45m
1-P1-025	SDCU Recovery Room	1	Recovery Bay / Recovery Room	25	20	Radiant Panels	Remote Sensor Adj.	Yes	Comfort Cooled Fresh Air	Central Supply and Extract	15	15	Balanced	F7	43	41	500	n/a	None	A	90	Switch / Dimmer	Bed / Trolley 1.45m
1-P1-026	SDCU Recovery Room	1	Recovery Bay / Recovery Room	25	20	Radiant Panels	Remote Sensor Adj.	Yes	Comfort Cooled Fresh Air	Central Supply and Extract	15	15	Balanced	F7	43	41	500	n/a	None	A	90	Switch / Dimmer	Bed / Trolley 1.45m
1-P1-027	Linen Bay	1	Linen Bay	28	16	Adjacent Space Transfer	None	No	None	Central Supply Air	37	0	Positive	F7	n/a	n/a	100 (KNX)	n/a	None	A	80	Automatic Controls	Floor 0m
1-P1-028	Recovery Staff Base	1	Cellular / Ward Offices	28	18	Radiant Panels	Remote Sensor Adj.	Yes	Comfort Cooled Fresh Air	Central Supply and Extract	4	3	Positive	F7	43	41	400	n/a	None	A	80	Switch	Desk 0.75 to 0.85m
1-P1-029	Post Anaesthetic Recovery	1	Recovery Bay / Recovery Room	25	20	Radiant Panels	Remote Sensor Adj.	Yes	Comfort Cooled Fresh Air	Central Supply and Extract	15	15	Balanced	F7	43	41	500	n/a	None	A	90	Switch / Dimmer	Bed / Trolley 1.45m
1-P1-030	Recovery room: post anaesthetic, 1 place	1	Recovery Bay / Recovery Room	25	20	Radiant Panels	Remote Sensor Adj.	Yes	Comfort Cooled Fresh Air	Central Supply and Extract	15	15	Balanced	F7	43	41	500	n/a	None	A	90	Switch / Dimmer	Bed / Trolley 1.45m
1-P1-031	Recovery room: post anaesthetic, 1 place	1	Recovery Bay / Recovery Room	25	20	Radiant Panels	Remote Sensor Adj.	Yes	Comfort Cooled Fresh Air	Central Supply and Extract	15	15	Balanced	F7	43	41	500	n/a	None	A	90	Switch / Dimmer	Bed / Trolley 1.45m
1-P1-032	Operating Theatre	1	Operating Theatre Suite	31	18	warm air via AHU Battery	Local / BMS Adjustable	Yes	Comfort Cooled Fresh Air	Central Supply and Extract	25	7	Positive	F7	43	41	1000	n/a	10,000 - 100,000	A	90	Switch	Bed / Trolley 1.45m
1-P1-033	Anaesthetic Room	1	Operating Theatre Suite	25	18	warm air via AHU Battery	Local / BMS Adjustable	Yes	Comfort Cooled Fresh Air	Central Supply and Extract	15	15	Balanced	F7	43	41	500	n/a	10,000 - 100,000	A	90	Switch	Bed / Trolley 1.45m
1-P1-034	Scrub-up (single)	1	Operating Theatre Suite	25	18	warm air via AHU Battery	Local / BMS Adjustable Sensor	Yes	Comfort Cooled Fresh Air	Central General Extract	0	12	Negative	None	n/a	41	500	n/a	None	A	90	Switch	General working plane 1m
1-P1-035	Dictation/ 1:1/Phone Booth	1	Cellular / Ward Offices	28	18	Radiant Panels	Remote Sensor Adj.	Yes	Comfort Cooled Fresh Air	Central Supply and Extract	2 people at 10 l/s per person (7ach)	2 people at 10 l/s per person (7ach)	Balanced	F7	43	n/a	400	n/a	None	A	80	Automatic Controls	Desk 0.75 to 0.85m
1-P1-036	Image Intensifier Bay	1	Circulation Equipment Storage Bays	28	16	Adjacent Space Transfer	None	No	None	Central General Extract	0	3	Negative	None	n/a	n/a	200	n/a	None	A	80	Automatic Controls	Floor 0m
1-P1-038	Satellite Pharmacy Store	1	Clean Utility	28	18	Adjacent Space Transfer	None	Yes	Comfort Cooled Fresh Air	Central Supply Air	6	0	Positive	F7	Positive	n/a	150	n/a	None	A	80	Automatic Controls	General working plane 1m
1-P1-039	Preparation Room	1	Operating Theatre Suite	25	18	warm air via AHU Battery	Local / BMS Adjustable Sensor	Yes	Comfort Cooled Fresh Air	Central Supply Air	10	0	Positive	F7	43	41	500	n/a	None	A	90	Switch	General working plane 1m
1-P1-040	Exit Bay	1	Operating Theatre Suite	25	18	Radiant Panels	Remote Sensor Adj.	No	None	None	0	0	n/a	None	43	n/a	300	n/a	None	A	80	Automatic Controls	Bed / Trolley 1.45m
1-P1-041	Utility Room	1	Operating Theatre Suite	25	18	warm air via AHU Battery	Local / BMS Adjustable Sensor	Yes	Comfort Cooled Fresh Air	Central General Extract	0	39	Negative	None	43	41	500	n/a	None	A	90	Switch	General working plane 1m
1-P1-042	Parking bay, fibre optic bronchoscope light source trolley DCN	1	Circulation Equipment Storage Bays	28	16	Adjacent Space Transfer Air	None	No	None	Central General Extract	0	3	Negative	None	n/a	n/a	200	n/a	None	A	80	Automatic Controls	Floor 0m
1-P1-043	X-Ray/Ultrasound Bay	1	Circulation Equipment Storage Bays	28	16	Adjacent Space Transfer Air	None	No	None	Central General Extract	0	3	Negative	None	n/a	n/a	200	n/a	None	A	80	Automatic Controls	Floor 0m
1-P1-044	Operating Theatre	1	Operating Theatre Suite	31	18	warm air via AHU Battery	Local / BMS Adjustable	Yes	Comfort Cooled Fresh Air	Central Supply and Extract	25	7	Positive	F7	43	41	1000	n/a	10,000 - 100,000	A	90	Switch	Bed / Trolley 1.45m
1-P1-045	Preparation Room	1	Operating Theatre Suite	25	18	warm air via AHU Battery	Local / BMS Adjustable Sensor	Yes	Comfort Cooled Fresh Air	Central Supply Air	10	0	Positive	F7	43	41	500	n/a	None	A	90	Switch	General working plane 1m
1-P1-046	Scrub-up (single)	1	Operating Theatre Suite	25	18	warm air via AHU Battery	Local / BMS Adjustable Sensor	Yes	Comfort Cooled Fresh Air	Central General Extract	0	12	Negative	n/a	43	41	500	n/a	None	A	90	Switch	General working plane 1m
1-P1-047	Anaesthetic Room	1	Operating Theatre Suite	25	18	warm air via AHU Battery	Local / BMS Adjustable Sensor	Yes	Comfort Cooled Fresh Air	Central Supply and Extract	15	15	Balanced	F7	43	41	500	n/a	10,000 - 100,000	A	90	Switch	Bed / Trolley 1.45m
1-P1-048	DSR	1	DSR	28	18	Adjacent Space Transfer Air	None	No	None	Central Dirty Extract	0	6	Negative	None	n/a	60	100	n/a	None	A	80	Automatic Controls	Floor 0m
1-P1-049	Clean Scopes Store	1	Storage Area Equipment	28	16	Radiant Panels	Remote Sensor Adj.	Yes	Comfort Cooled Fresh Air	Central Supply Air	6	0	Positive	F7	43	n/a	200	n/a	None	A	80	Automatic Controls	Floor 0m
1-P1-050	Day Case Theatre	1	Operating Theatre Suite	25	18	warm air via AHU Battery	Local / BMS Adjustable Sensor	Yes	Comfort Cooled Fresh Air	Central Supply and Extract	25	7	Positive	F7	43	41	500	n/a	10,000 - 100,000	A	90	Switch	Bed / Trolley 1.45m
1-P1-051	MRI Reporting	1	Cellular / Ward Offices	28	18	Radiant Panels	Remote Sensor Adj.	Yes	Ceiling Cassette - Chilled Water	Central Supply and Extract	4	3	Positive	F7	43	n/a	400	n/a	None	A	80	Switch	Desk 0.75 to 0.85m
1-P1-052	WC-Staff	1	Toilet	28	18	Adjacent Space Transfer Air	None	No	None	Central Dirty Extract	0	10	Negative	None	n/a	41	200	n/a	None	A	80	Automatic Controls	Floor 0m
1-P1-053	Staff Room	1	Common room/staff room/lounge	28	18	Radiant Panels	Remote Sensor Adj.	Yes	Comfort Cooled Fresh Air	Central Supply and Extract	35 people at 10 l/s per person (8ach)	35 people at 10 l/s per person (8ach)	Balanced	F7	43	41	300	n/a	None	A	80	Switch	Floor 0m
1-P1-054	Sub-Wait Area	1	Waiting Room	28	18	Radiant Panels	Remote Sensor Adj.	Yes	Comfort Cooled Fresh Air	Central Supply and Extract	3 people at 10 l/s per person (9ach)	3 people at 10 l/s per person (9ach)	Balanced	F7	43	n/a	300	n/a	None	A	80	Automatic Controls	Floor 0m
1-P1-055	Inpatient Holding Bays	1	Circulation Equipment Storage Bays	28	16	Radiant Panels	Remote Sensor Adj.	Yes	Comfort Cooled Fresh Air	Central Supply	4	0	Positive	F7	43	41	200	n/a	None	A	80	Automatic Controls	Bed / Trolley 1.45m
1-P1-056	Inpatient Holding Bays	1	Circulation Equipment Storage Bays	28	16	Radiant Panels	Remote Sensor Adj.	Yes	Comfort Cooled Fresh Air	Central Supply	4	0	Positive	F7	43	41	200	n/a	None	A	80	Automatic Controls	Bed / Trolley 1.45m
1-P1-057	Trolley Bay	1	Circulation Equipment Storage Bays	28	16	Adjacent Space Transfer	None	No	None	Central Supply	41	0	Positive	F7	n/a	n/a	200	n/a	None	A	80	Automatic Controls	Floor 0m
1-P1-058	Angiography Procedures Machine Room	1	Operating Theatre Suite	25	18	warm air via AHU Battery	Local / BMS Adjustable Sensor	Yes	Ceiling Cassette - Chilled Water	Central Supply and Extract	6	6	Balanced	F7	43	n/a	500	n/a	None	A	90	Switch	General working plane 1m
1-P1-059	Preparation Room	1	Operating Theatre Suite	25	18	warm air via AHU Battery	Local / BMS Adjustable Sensor	Yes	Comfort Cooled Fresh Air	Central Supply Air	10	0	Positive	F7	43	41	500	n/a	None	A	90	Switch	General working plane 1m
1-P1-060	Trolley Bay	1	Circulation Equipment Storage Bays	28	16	Adjacent Space Transfer	None	No	None	None	0	0	n/a	None	n/a	n/a	200	n/a	None	A	80	Automatic Controls	Floor 0m
1-P1-061	WC - Wheelchair accessible	1	Toilet	28	18	Adjacent Space Transfer Air	None	No	None	Central Dirty Extract	0	10	Negative	None	n/a	41	200	n/a	None	A	80	Automatic Controls	Floor 0m
1-P1-063	Preparation Room	1	Operating Theatre Suite	25	18	warm air via AHU Battery	Local / BMS Adjustable Sensor	Yes	Comfort Cooled Fresh Air	Central Supply and Extract	15	15	Balanced	F7	43	41	500	n/a	None	A	90	Switch	Bed / Trolley 1.45m
1-P1-064	MRI Room	1	Diagnostic room	25	18	Warm Air - Reheat Battery	BMS Adjustable Sensor	Yes	By Specialist	Central Supply and Extract	8 & 25 (Theatre Mode)	8	Positive	F7	43	n/a	300	n/a	1000	A	80	Switch / Dimmer	General working plane 1m
1-P1-065	Control Room - MRI	1	Cellular / Ward Offices	25	18	Radiant Panels	Remote Sensor Adj.	Yes	Wall Mounted Unit	Central Supply and Extract	4	3	Positive	F7	43	n/a	400	n/a	None	A	80	Switch	Desk 0.75 to 0.85m
1-P1-066	Anaesthetic Room	1	Operating Theatre Suite	25	18	warm air via AHU Battery	Local / BMS Adjustable Sensor	Yes	Comfort Cooled Fresh Air	Central Supply and Extract	15	15	Balanced	F7	43	41	500	n/a	10,000 - 100,000	A	90	Switch	Bed / Trolley 1.45m
1-P1-067	Exit Bay	1	Operating Theatre Suite	25	18	Adjacent Space Transfer Air	None	No	None	None	0	0	n/a	None	n/a	n/a	300	n/a	None	A	80	Automatic Controls	Bed / Trolley 1.45m
1-P1-068	Equipment Room - MRI	1	Storage Area Equipment	28	16	Adjacent Space Transfer Air	None	Yes	Floor Mounted Unit Chilled Water	Central General Extract	0	3	Negative	None	n/a	n/a	200	n/a	None	A	80	Automatic Controls	Floor 0m
1-P1-069	Anaesthetic Room	1	Operating Theatre Suite	25	18	warm air via AHU Battery	Local / BMS Adjustable Sensor	Yes	Comfort Cooled Fresh Air	Central Supply and Extract	15	15	Balanced	F7	43	41	500	n/a	10,000 - 100,000	A	90	Switch	Bed / Trolley 1.45m
1-P1-070	Operating Theatre	1	Operating Theatre Suite	25	18	warm air via AHU Battery	Local / BMS Adjustable Sensor	Yes	Comfort Cooled Fresh Air	Central Supply and Extract	25	7	Positive	F7	43	n/a	1000	n/a	10,000 - 100,000	A	90	Switch	Bed / Trolley 1.45m
1-P1-071	Scrub-up (single)	1	Operating Theatre Suite	25	18	warm air via AHU Battery	Local / BMS Adjustable Sensor	Yes	Comfort Cooled Fresh Air	Central General Extract	0	12	Negative	None	n/a	41	500	n/a	None	A	90	Switch	General working plane 1m
1-P1-072	Preparation Room	1	Operating Theatre Suite	25	18	warm air via AHU Battery	Local / BMS Adjustable Sensor	Yes	Comfort Cooled Fresh Air	Central Supply Air	10	0	Positive	F7	43	41	500	n/a	None	A	90	Switch	General working plane 1m
1-P1-073	Scrub-up (single)	1	Operating Theatre Suite	25	18	warm air via AHU Battery	Local / BMS Adjustable Sensor	Yes	Comfort Cooled Fresh Air	Central General Extract	0	12	Negative	None	n/a	41	500	n/a	None	A	90	Switch	General working plane 1m
1-P1-074	Anaesthetic Room	1	Operating Theatre Suite	25	18	warm air via AHU Battery	Local / BMS Adjustable Sensor	Yes	Comfort Cooled Fresh Air	Central Supply and Extract	15	15	Balanced	F7	43	41	500	n/a	10,000 - 100,000	A	90	Switch	Bed / Trolley 1.45m

Room No.	Room Name	Qty	Room Function	Temp (max)	Temp (min)	Heating Type	Heating Control	Cooling (present)	Cooling (type)	Ventilation (type)	Supply (ac/hr)	Extract (ac/hr)	Relative pressure	Min filtration	Surface temp	Water temp	Normal lux	Night lux	Local lux	Standby grade	Colour render	Control	Plane
1-P1-075	Preparation Room	1	Operating Theatre Suite	25	18	warm air via AHU Battery	Local / BMS Adjustable Sensor	Yes	Comfort Cooled Fresh Air	Central Supply Air	10	0	Positive	F7	43	41	500	n/a	None	A	90	Switch	General working plane 1m
1-P1-076	Exit Bay	1	Operating Theatre Suite	25	18	Adjacent Space Transfer	None	No	None	None	0	0	n/a	None	n/a	n/a	300	n/a	None	A	80	Automatic Controls	Bed / Trolley 1.45m
1-P1-077	Utility Room	1	Operating Theatre Suite	25	18	warm air via AHU Battery	Local / BMS Adjustable Sensor	Yes	Comfort Cooled Fresh Air	Central General Extract	0	39	Negative	None	43	41	150	n/a	10,000 - 100,000	A	80	Switch	General working plane 1m
1-P1-078	Operating Theatre	1	Operating Theatre Suite	25	18	warm air via AHU Battery	Local / BMS Adjustable Sensor	Yes	Comfort Cooled Fresh Air	Central Supply and Extract	25	7	Positive	F7	43	n/a	1000	n/a	10,000 - 100,000	A	90	Switch	Bed / Trolley 1.45m
1-P1-079	Preparation Room	1	Operating Theatre Suite	25	18	warm air via AHU Battery	Local / BMS Adjustable Sensor	Yes	Comfort Cooled Fresh Air	Central Supply Air	10	0	Positive	F7	43	41	500	n/a	None	A	90	Switch	General working plane 1m
1-P1-080	Scrub-up (single)	1	Operating Theatre Suite	25	18	warm air via AHU Battery	Local / BMS Adjustable Sensor	Yes	Comfort Cooled Fresh Air	Central General Extract	0	12	Negative	None	n/a	41	500	n/a	None	A	90	Switch	General working plane 1m
1-P1-083	Dictation/ 1:1/Phone Booth	1	Cellular / Ward Offices	28	18	Radiant Panels	Remote Sensor Adj.	Yes	Comfort Cooled Fresh Air	Central Supply and Extract	2 people at 10 l/s per person (7ach)	2 people at 10 l/s per person (7ach)	Balanced	F7	43	n/a	400	n/a	None	A	80	Automatic Controls	Desk 0.75 to 0.85m
1-P1-084	Image Intensifier Bay	1	Circulation Equipment Storage Bays	28	16	Adjacent Space Transfer Air	None	No	None	Central General Extract	0	3	Negative	None	n/a	n/a	200	n/a	None	A	80	Automatic Controls	Floor 0m
1-P1-085	Dictation/ 1:1/Phone Booth	1	Cellular / Ward Offices	28	18	Radiant Panels	Remote Sensor Adj.	Yes	Comfort Cooled Fresh Air	Central Supply and Extract	2 people at 10 l/s per person (7ach)	2 people at 10 l/s per person (7ach)	Balanced	F7	43	n/a	400	n/a	None	A	80	Automatic Controls	Desk 0.75 to 0.85m
1-P1-086	Medical Gas Cylinder Store	1	Storage Area Med Gas	28	16	Adjacent Space Transfer Air	None	No	None	Central General Extract	0	7	Negative	None	n/a	n/a	200	n/a	None	A	80	Automatic Controls	Floor 0m
1-P1-087	Clinical Equipment Store	1	Storage Area Equipment	28	16	Radiant Panels	Remote Sensor Adj.	No	None	Central General Extract	0	3	Negative	None	43	n/a	200	n/a	None	A	80	Automatic Controls	Floor 0m
1-P1-088	IPS Room	1	IPS Room	30	18	Adjacent Space Transfer Air	None	No	None	Central General Extract	0	3	Negative	None	n/a	n/a	200	n/a	None	A	80	Automatic Controls	Floor 0m
1-P1-089	DCN Nurse Management Office	1	Cellular / Ward Offices	28	18	Radiant Panels	Remote Sensor Adj.	Yes	Comfort Cooled Fresh Air	Central Supply and Extract	3 people at 10 l/s per person (5ach)	3 people at 10 l/s per person (5ach)	Balanced	F7	43	n/a	400	n/a	None	A	80	Switch	Desk 0.75 to 0.85m
1-P1-090	Dirty Utility: bedpan disposal & urine test	1	Dirty utility	28	18	Radiant Panels	Remote Sensor Adj.	No	None	Central Dirty Extract	0	6	Negative	None	43	41	200	n/a	None	A	80	Automatic Controls	Floor 0m
1-P1-091	Operating Theatre	1	Operating Theatre Suite	25	18	warm air via AHU Battery	Local / BMS Adjustable Sensor	Yes	Comfort Cooled Fresh Air	Central Supply and Extract	25	7	Positive	F7	43	n/a	1000	n/a	10,000 - 100,000	A	90	Switch	Bed / Trolley 1.45m
1-P1-092	Utility Room	1	Operating Theatre Suite	25	18	warm air via AHU Battery	Local / BMS Adjustable Sensor	Yes	Comfort Cooled Fresh Air	Central General Extract	0	39	Negative	n/a	43	41	150	n/a	10,000 - 100,000	A	80	Switch	General working plane 1m
1-P1-093	Angiography Procedures Room	1	Operating Theatre Suite	25	18	warm air via AHU Battery	Local / BMS Adjustable Sensor	Yes	Comfort Cooled Fresh Air	Central Supply Air	25	0	Positive	F7	43	41	500	n/a	10,000 - 100,000	A	90	Switch	Bed / Trolley 1.45m
1-P1-094	Angiography Procedures Control Room	1	Operating Theatre Suite	25	18	warm air via AHU Battery	Local / BMS Adjustable Sensor	Yes	Ceiling Cassette - Chilled Water	Central Supply and Extract	4	3	Positive	F7	43	n/a	500	n/a	10,000 - 100,000	A	90	Switch	Desk 0.75 to 0.85m
1-P1-095	Sterile Supplies Store	1	Clean Utility	28	18	Adjacent Space Transfer	None	Yes	Comfort Cooled Fresh Air	Central Supply Air	6	0	Positive	F7	n/a	41	150	n/a	None	A	80	Automatic Controls	General working plane 1m
1-P1-097	Image Intensifier Bay	1	Circulation Equipment Storage Bays	28	16	Adjacent Space Transfer Air	None	No	None	Central General Extract	0	10	Negative	None	n/a	n/a	200	n/a	None	A	80	Automatic Controls	Floor 0m
1-P1-098	WC-Staff	1	Toilet	28	18	Adjacent Space Transfer Air	None	No	None	Central Dirty Extract	0	10	Negative	None	n/a	41	200	n/a	None	A	80	Automatic Controls	Floor 0m
1-P1-099	Sterile Supplies Store	1	Clean Utility	28	18	Radiant Panels	Remote Sensor Adj.	Yes	Comfort Cooled Fresh Air	Central Supply Air	6	0	Positive	F7	43	n/a	150	n/a	None	A	80	Automatic Controls	General working plane 1m
1-P1-100	Female Staff Changing and Lockers	1	Changing Facilities	28	18	Radiant Panels	Remote Sensor Adj.	Yes	Comfort Cooled Fresh Air	Central Supply and Extract	5	4	Positive	F7	43	41	100	n/a	None	A	80	Automatic Controls	Floor 0m
1-P1-101	Clean Trays	1	DSR	28	18	Adjacent Space Transfer Air	None	No	None	Central Dirty Extract	0	6	Negative	None	n/a	60	100	n/a	None	A	80	Automatic Controls	Floor 0m
1-P1-102	Male Staff Changing and Lockers	1	Changing Facilities	28	18	Radiant Panels	Remote Sensor Adj.	Yes	Comfort Cooled Fresh Air	Central Supply and Extract	5	4	Positive	F7	43	41	100	n/a	None	A	80	Automatic Controls	Floor 0m
1-P1-103	Footwear Machine Washing Area	1	Dirty utility	28	18	Adjacent Space Transfer Air	None	Yes	Ceiling Cassette - Chilled Water	Central Dirty Extract	0	6	Negative	None	n/a	41	200	n/a	None	A	80	Automatic Controls	Floor 0m
1-P1-104	Dirty Trays	1	Dirty utility	28	18	Adjacent Space Transfer Air	None	No	None	Central Dirty Extract	0	6	Negative	None	n/a	41	200	n/a	None	A	80	Automatic Controls	Floor 0m
1-P1-105	Disposal Hold	1	Disposal Hold	28	16	Adjacent Space Transfer Air	None	No	None	Central Dirty Extract	0	6	Negative	None	n/a	n/a	200	n/a	None	A	80	Automatic Controls	Floor 0m
1-P1-106	Clean Utility	1	Clean Utility	28	18	Radiant Panels	Remote Sensor Adj.	Yes	Comfort Cooled Fresh Air	Central Supply Air	6	0	Positive	F7	43	41	150	n/a	None	A	80	Automatic Controls	General working plane 1m
1-P1-107	Resuscitation Trolley Bay	1	Resus Trolley bay	28	16	Adjacent Space Transfer	None	No	None	None	0	0	n/a	None	n/a	n/a	200	n/a	None	A	80	Automatic Controls	Floor 0m
1-P1-108	Linen Bay	1	Linen Bay	28	16	Adjacent Space Transfer	None	No	None	None	0	0	n/a	None	n/a	n/a	100 (KNX)	n/a	None	A	80	Automatic Controls	Floor 0m
1-P1-109	Recovery bay: post anaesthetic, 1 place	1	Recovery Bay / Recovery Room	25	20	Radiant Panels	Remote Sensor Adj.	Yes	Comfort Cooled Fresh Air	Central Supply and Extract	15	15	Balanced	F7	43	41	500	n/a	None	A	90	Switch / Dimmer	Bed / Trolley 1.45m
1-P1-113	Staff and communication base, enclosed 3 staff	1	Cellular / Ward Offices	28	18	Radiant Panels	Remote Sensor Adj.	Yes	Ceiling Cassette - Chilled Water	Central Supply and Extract	4	3	Positive	F7	43	n/a	400	n/a	None	A	80	Automatic Controls	Desk 0.75 to 0.85m
1-P1-116	Consulting, examination & changing room	1	Consulting Room	25	18	Radiant Panels	Remote Sensor Adj.	Yes	Ceiling Cassette - Chilled Water	Central Supply and Extract	3	3	Balanced	F7	43	41	300	n/a	1000	A	80	Switch	Bed / Trolley 1.45m
1-P1-117	IPS Room	1	IPS Room	30	18	Adjacent Space Transfer Air	None	No	None	Central General Extract	0	3	Negative	None	n/a	n/a	200	n/a	None	A	80	Automatic Controls	Floor 0m
1-P1-118	Consulting, examination & changing room	1	Consulting Room	25	18	Radiant Panels	Remote Sensor Adj.	Yes	Ceiling Cassette - Chilled Water	Central Supply and Extract	3	3	Balanced	F7	43	41	300	n/a	1000	A	80	Switch	Bed / Trolley 1.45m
1-P1-119	Reception, administration office & communication base: 4 staff	1	Reception	28	18	Radiant Panels	Remote Sensor Adj.	Yes	Ceiling Cassette - Chilled Water	Central Supply and Extract	3	2	Positive	F7	43	n/a	300	n/a	None	A	80	Switch	Desk 0.75 to 0.85m
1-P1-120	Consulting, examination & changing room	1	Consulting Room	25	18	Radiant Panels	Remote Sensor Adj.	Yes	Ceiling Cassette - Chilled Water	Central Supply and Extract	3	3	Balanced	F7	43	41	300	n/a	1000	A	80	Switch	Bed / Trolley 1.45m
1-P1-121	Reception / Office	1	Office	25	18	Radiant Panels	Remote Sensor Adj.	Yes	Ceiling Cassette - Chilled Water	Central Supply and Extract	5 people at 10 l/s per person (9ach)	5 people at 10 l/s per person (9ach)	Balanced	F7	43	n/a	300	n/a	None	A	80	Switch	Desk 0.75 to 0.85m
1-P1-122	WC - Wheelchair accessible	1	Toilet	28	18	Adjacent Space Transfer Air	None	No	None	Central Dirty Extract	0	10	Negative	None	n/a	41	200	n/a	None	A	80	Automatic Controls	Floor 0m
1-P1-123	WC - Wheelchair accessible	1	Toilet	28	18	Adjacent Space Transfer Air	None	No	None	Central Dirty Extract	0	10	Negative	None	n/a	41	200	n/a	None	A	80	Automatic Controls	Floor 0m
1-P1-124	Duty Room: 2 porters	1	Cellular / Ward Offices	28	18	Radiant Panels	Remote Sensor Adj.	Yes	Comfort Cooled Fresh Air	Central Supply and Extract	2 people at 10 l/s per person (6ach)	2 people at 10 l/s per person (6ach)	Balanced	F7	43	n/a	400	n/a	None	A	80	Switch	Desk 0.75 to 0.85m
1-P1-127	Changing Cubicles	1	Changing Facilities	28	18	Radiant Panels	Remote Sensor Adj.	Yes	Comfort Cooled Fresh Air	Central Supply and Extract	5	4	Positive	F7	43	n/a	100	n/a	None	A	80	Automatic Controls	Floor 0m
1-P1-128	Admissions Lounge	1	Common room/staff room/lounge	28	18	Radiant Panels	Remote Sensor Adj.	Yes	Comfort Cooled Fresh Air	Central Supply and Extract	6	8	Negative	F7	43	41	300	n/a	None	A	80	Switch	Floor 0m
1-P1-129	Operating Theatre	1	Operating Theatre Suite	25	18	warm air via AHU Battery	Local / BMS Adjustable Sensor	Yes	Comfort Cooled Fresh Air	Central Supply and Extract	25	7	Positive	F7	43	n/a	1000	n/a	10,000 - 100,000	A	90	Switch	Bed / Trolley 1.45m
1-P1-130	Utility Room	1	Operating Theatre Suite	25	18	warm air via AHU Battery	Local / BMS Adjustable Sensor	Yes	Comfort Cooled Fresh Air	Central General Extract	0	39	Negative	n/a	43	41	500	n/a	None	A	90	Switch	General working plane 1m
1-P1-131	Operating Theatre	1	Operating Theatre Suite	25	18	warm air via AHU Battery	Local / BMS Adjustable Sensor	Yes	Comfort Cooled Fresh Air	Central Supply and Extract	25	7	Positive	F7	43	n/a	500	n/a	10,000 - 100,000	A	90	Switch	Bed / Trolley 1.45m
1-P1-132	Anaesthetic Room	1	Operating Theatre Suite	25	18	warm air via AHU Battery	Local / BMS Adjustable Sensor	Yes	Comfort Cooled Fresh Air	Central Supply and Extract	15	15	Balanced	F7	43	41	500	n/a	10,000 - 100,000	A	90	Switch	Bed / Trolley 1.45m
1-P1-133	Scrub-up (single)	1	Operating Theatre Suite	25	18	warm air via AHU Battery	Local / BMS Adjustable Sensor	Yes	Comfort Cooled Fresh Air	Central General Extract	0	12	Negative	n/a	43	41	500	n/a	None	A	90	Switch	General working plane 1m

Room No.	Room Name	Qty	Room Function	Temp (max)	Temp (min)	Heating Type	Heating Control	Cooling (present)	Cooling (type)	Ventilation (type)	Supply (ac/hr)	Extract (ac/hr)	Relative pressure	Min filtration	Surface temp	Water temp	Normal lux	Night lux	Local lux	Standby grade	Colour render	Control	Plane
1-P1-134	Preparation Room	1	Operating Theatre Suite	25	18	warm air via AHU Battery	Local / BMS Adjustable Sensor	Yes	Comfort Cooled Fresh Air	Central Supply Air	10	0	Positive	F7	43	41	500	n/a	None	A	90	Switch	General working plane 1m
1-P1-135	Exit Bay	1	Operating Theatre Suite	25	18	Adjacent Space Transfer Air	None	No	None	None	0	0	n/a	None	n/a	n/a	300	n/a	None	A	80	Automatic Controls	Bed / Trolley 1.45m
1-P1-136	Preparation Room	1	Operating Theatre Suite	25	18	warm air via AHU Battery	Local / BMS Adjustable Sensor	Yes	Comfort Cooled Fresh Air	Central Supply Air	10	0	Positive	F7	43	41	500	n/a	None	A	90	Switch	General working plane 1m
1-P1-137	Scrub-up (single)	1	Operating Theatre Suite	25	18	warm air via AHU Battery	Local / BMS Adjustable Sensor	Yes	Comfort Cooled Fresh Air	Central General Extract	0	12	Negative	None	n/a	41	500	n/a	None	A	90	Switch	General working plane 1m
1-P1-138	Anaesthetic Room	1	Operating Theatre Suite	25	18	warm air via AHU Battery	Local / BMS Adjustable Sensor	Yes	Comfort Cooled Fresh Air	Central Supply and Extract	15	15	Balanced	F7	43	41	500	n/a	10,000 - 100,000	A	90	Switch	Bed / Trolley 1.45m
1-P1-140	Operating Theatre	1	Operating Theatre Suite	25	18	warm air via AHU Battery	Local / BMS Adjustable Sensor	Yes	Comfort Cooled Fresh Air	Central Supply and Extract	25	7	Positive	F7	43	n/a	1000	n/a	10,000 - 100,000	A	90	Switch	Bed / Trolley 1.45m
1-P1-141	Anaesthetic Room	1	Operating Theatre Suite	25	18	warm air via AHU Battery	Local / BMS Adjustable Sensor	Yes	Comfort Cooled Fresh Air	Central Supply and Extract	15	15	Balanced	F7	43	41	500	n/a	10,000 - 100,000	A	90	Switch	Bed / Trolley 1.45m
1-P1-143	Office Senior Nurse Theatres	1	Cellular / Ward Offices	28	18	Radiant Panels	Remote Sensor Adj.	Yes	Comfort Cooled Fresh Air	Central Supply and Extract	4	3	Positive	F7	43	n/a	400	n/a	None	A	80	Switch	Desk 0.75 to 0.85m
1-P1-144	Image Intensifier Bay	1	Circulation Equipment Storage Bays	28	16	Adjacent Space Transfer Air	None	No	None	Central General Extract	0	3	Negative	None	n/a	n/a	200	n/a	None	A	80	Automatic Controls	Floor 0m
1-P1-145	Dictation/ 1:1/Phone Booth	1	Cellular / Ward Offices	28	18	Radiant Panels	Remote Sensor Adj.	Yes	Comfort Cooled Fresh Air	Central Supply and Extract	2 people at 10 l/s per person (7ach)	2 people at 10 l/s per person (7ach)	Balanced	F7	43	n/a	400	n/a	None	A	80	Automatic Controls	Desk 0.75 to 0.85m
1-P1-146	Clinical Equipment Store	1	Storage Area Equipment	28	16	Radiant Panels	Remote Sensor Adj.	No	None	Central General Extract	0	3	Negative	None	43	n/a	200	n/a	None	A	80	Automatic Controls	Floor 0m
1-P1-147	Office Staff	1	Cellular / Ward Offices	28	18	Radiant Panels	Remote Sensor Adj.	Yes	Ceiling Cassette - Chilled Water	Central Supply and Extract	6	4	Positive	F7	43	n/a	400	n/a	None	A	80	Switch	Desk 0.75 to 0.85m
1-P1-148	Scrub-up (single)	1	Operating Theatre Suite	25	18	warm air via AHU Battery	Local / BMS Adjustable Sensor	Yes	Comfort Cooled Fresh Air	Central General Extract	0	12	Negative	None	n/a	41	500	n/a	None	A	90	Switch	General working plane 1m
1-P1-149	Preparation Room	1	Operating Theatre Suite	25	18	warm air via AHU Battery	Local / BMS Adjustable Sensor	Yes	Comfort Cooled Fresh Air	Central Supply Air	10	0	Positive	F7	43	41	500	n/a	None	A	90	Switch	General working plane 1m
1-P1-151	Exit Bay	1	Operating Theatre Suite	25	18	Radiant Panels	Remote Sensor Adj.	Yes	Ceiling Cassette - Chilled Water	None	0	0	n/a	None	43	n/a	300	n/a	None	A	80	Automatic Controls	Bed / Trolley 1.45m
1-P1-152	Utility Room	1	Operating Theatre Suite	25	18	warm air via AHU Battery	Local / BMS Adjustable Sensor	Yes	Comfort Cooled Fresh Air	Central General Extract	0	39	Negative	None	43	41	500	n/a	None	A	90	Switch	General working plane 1m
1-P1-153	Preparation Room	1	Operating Theatre Suite	25	18	warm air via AHU Battery	Local / BMS Adjustable Sensor	Yes	Comfort Cooled Fresh Air	Central Supply Air	10	0	Positive	F7	43	41	500	n/a	None	A	90	Switch	General working plane 1m
1-P1-154	Scrub-up (single)	1	Operating Theatre Suite	25	18	warm air via AHU Battery	Local / BMS Adjustable Sensor	Yes	Comfort Cooled Fresh Air	Central General Extract	0	12	Negative	None	n/a	41	500	n/a	None	A	90	Switch	General working plane 1m
1-P1-155	Operating Theatre	1	Operating Theatre Suite	25	18	warm air via AHU Battery	Local / BMS Adjustable Sensor	Yes	Comfort Cooled Fresh Air	Central Supply and Extract	25	7	Positive	F7	43	n/a	1000	n/a	10,000 - 100,000	A	90	Switch	Bed / Trolley 1.45m
1-P1-156	Anaesthetic Room	1	Operating Theatre Suite	25	18	warm air via AHU Battery	Local / BMS Adjustable Sensor	Yes	Comfort Cooled Fresh Air	Central Supply and Extract	15	15	Balanced	F7	43	41	500	n/a	10,000 - 100,000	A	90	Switch	Bed / Trolley 1.45m
1-P1-158	Dirty Scopes Store	1	Dirty utility	28	18	Adjacent Space Transfer Air	None	No	None	Central General Extract	0	3	Negative	None	n/a	41	200	n/a	None	A	80	Automatic Controls	Floor 0m
1-P1-159	Store - Plaster	1	Storage Area Equipment	28	16	Adjacent Space Transfer Air	None	No	None	Central General Extract	0	3	Negative	None	n/a	n/a	200	n/a	None	A	80	Automatic Controls	Floor 0m
1-P1-161	Disposal Hold	1	Disposal Hold	28	16	Adjacent Space Transfer Air	None	No	None	Central Dirty Extract	0	6	Negative	None	n/a	n/a	200	n/a	None	A	80	Automatic Controls	Floor 0m
1-P1-162	Staff Reception / Office / Control Base	1	Reception	28	18	Radiant Panels	Remote Sensor Adj.	Yes	Ceiling Cassette - Chilled Water	Central Supply and Extract	6	4	Positive	F7	43	n/a	300	n/a	None	A	80	Switch	Desk 0.75 to 0.85m
1-P1-163	DSR	1	DSR	28	18	Adjacent Space Transfer Air	None	No	None	Central Dirty Extract	0	6	Negative	None	n/a	60	100	n/a	None	A	80	Automatic Controls	Floor 0m
1-P1-164	Changing Cubicles	1	Changing Facilities	28	18	Radiant Panels	Remote Sensor Adj.	Yes	Comfort Cooled Fresh Air	Central Supply and Extract	5	4	Positive	F7	43	n/a	100	n/a	None	A	80	Automatic Controls	Floor 0m
1-P1-165	Changing Cubicles	1	Changing Facilities	28	18	Radiant Panels	Remote Sensor Adj.	Yes	Comfort Cooled Fresh Air	Central Supply and Extract	5	4	Positive	F7	43	41	100	n/a	None	A	80	Automatic Controls	Floor 0m
1-P1-167	Changing Cubicles	1	Changing Facilities	28	18	Radiant Panels	Remote Sensor Adj.	Yes	Comfort Cooled Fresh Air	Central Supply and Extract	5	4	Positive	F7	43	n/a	100	n/a	None	A	80	Automatic Controls	Floor 0m
1-P1-168	WC - Wheelchair accessible	1	Toilet	28	18	Adjacent Space Transfer Air	None	No	None	Central Dirty Extract	0	10	Negative	None	n/a	41	200	n/a	None	A	80	Automatic Controls	Floor 0m
1-P1-169	WC - Wheelchair accessible	1	Toilet	28	18	Adjacent Space Transfer Air	None	No	None	Central Dirty Extract	0	10	Negative	None	n/a	41	200	n/a	None	A	80	Automatic Controls	Floor 0m
1-P1-170	Immediate Pre Theatre Wait	1	Waiting Room	28	18	Radiant Panels	Remote Sensor Adj.	Yes	Ceiling Cassette - Chilled Water	Central Supply and Extract	5	5	Balanced	F7	43	41	300	n/a	None	A	80	Switch	Bed / Trolley 1.45m
1-P1-171	WC-Staff	1	Toilet	28	18	Adjacent Space Transfer Air	None	No	None	Central Dirty Extract	0	10	Negative	None	n/a	41	200	n/a	None	A	80	Automatic Controls	Floor 0m
1-P1-172	Charge Nurse Office	1	Cellular / Ward Offices	28	18	Radiant Panels	Remote Sensor Adj.	Yes	Ceiling Cassette - Chilled Water	Central Supply and Extract	4	3	Positive	F7	43	n/a	400	n/a	None	A	80	Switch	Desk 0.75 to 0.85m
1-P1-173	Locker Bay	1	Changing Facilities	28	18	Radiant Panels	Remote Sensor Adj.	Yes	Comfort Cooled Fresh Air	Central Supply and Extract	5	4	Positive	F7	43	n/a	100	n/a	None	A	80	Automatic Controls	Floor 0m
1-P1-174	General Office	1	Cellular / Ward Offices	28	18	Radiant Panels	Remote Sensor Adj.	Yes	Ceiling Cassette - Chilled Water	Central Supply and Extract	4	3	Positive	F7	43	n/a	400	n/a	None	A	80	Switch	Desk 0.75 to 0.85m
1-P1-175	Reception	1	Reception	28	18	Radiant Panels	Remote Sensor Adj.	Yes	Comfort Cooled Fresh Air	Central Supply Air	3	0	Positive	F7	43	n/a	300	n/a	None	A	80	Switch	Desk 0.75 to 0.85m
1-P1-176	Consult/Examination	1	Consulting Room	25	18	Radiant Panels	Remote Sensor Adj.	Yes	Ceiling Cassette - Chilled Water	Central Supply and Extract	3	3	Balanced	F7	43	41	300	n/a	1000	A	80	Switch	Bed / Trolley 1.45m
1-P1-177	Consult/Examination	1	Consulting Room	25	18	Radiant Panels	Remote Sensor Adj.	Yes	Ceiling Cassette - Chilled Water	Central Supply and Extract	3	3	Balanced	F7	43	41	300	n/a	1000	A	80	Switch	Bed / Trolley 1.45m
1-P1-178	Main Waiting/Play Area	1	Waiting Room	28	18	Radiant Panels	Remote Sensor Adj.	Yes	Ceiling Cassette - Chilled Water	Central Supply and Extract	25 people at 10 l/s per person (7ach)	25 people at 10 l/s per person (7ach)	Balanced	F7	43	n/a	300	n/a	None	A	80	Automatic Controls	Floor 0m
1-P1-179	WC - Wheelchair accessible	1	Toilet	28	18	Adjacent Space Transfer Air	None	No	None	Central Dirty Extract	0	10	Negative	None	n/a	41	200	n/a	None	A	80	Automatic Controls	Floor 0m
1-P1-180	WC Accessible	1	Toilet	28	18	Adjacent Space Transfer Air	None	No	None	Central Dirty Extract	0	10	Negative	None	n/a	41	200	n/a	None	A	80	Automatic Controls	Floor 0m
1-P1-183	Anaesthetic Room	1	Operating Theatre Suite	25	18	warm air via AHU Battery	Local / BMS Adjustable Sensor	Yes	Comfort Cooled Fresh Air	Central Supply and Extract	15	15	Balanced	F7	43	41	500	n/a	10,000 - 100,000	A	90	Switch	Bed / Trolley 1.45m
1-P1-184	Anaesthetic Room	1	Operating Theatre Suite	25	18	warm air via AHU Battery	Local / BMS Adjustable Sensor	Yes	Comfort Cooled Fresh Air	Central Supply and Extract	15	15	Balanced	F7	43	41	500	n/a	10,000 - 100,000	A	90	Switch	Bed / Trolley 1.45m
1-P1-185	Scrub-up (single)	1	Operating Theatre Suite	25	18	warm air via AHU Battery	Local / BMS Adjustable Sensor	Yes	Comfort Cooled Fresh Air	Central General Extract	0	12	Negative	None	n/a	n/a	500	n/a	None	A	90	Switch	General working plane 1m
1-P1-186	Exit Bay (interoperative)	1	Operating Theatre Suite	25	18	Adjacent Space Transfer Air	None	No	None	None	0	0	n/a	None	n/a	41	300	n/a	None	A	80	Switch	Bed / Trolley 1.45m
1-P1-187	Utility Room (interoperative)	1	Operating Theatre Suite	25	18	warm air via AHU Battery	Local / BMS Adjustable Sensor	Yes	Comfort Cooled Fresh Air	Central General Extract	0	39	Negative	None	43	41	150	n/a	None	A	90	Switch	General working plane 1m
1-P1-193	Toy Wash Store	1	Storage Area Equipment	28	16	Adjacent Space Transfer Air	None	No	None	Central General Extract	0	3	Negative	None	n/a	41	200	n/a	None	A	80	Automatic Controls	Floor 0m
1-P1-194	Cleaner Cupboard	1	Storage Area Equipment	28	16	Adjacent Space Transfer Air	None	No	None	Central General Extract	0	3	Negative	None	n/a	n/a	200	n/a	None	A	80	Automatic Controls	Floor 0m
1-P1-195	Store (RHSC)	1	Storage Area Equipment	28	16	Adjacent Space Transfer Air	None	No	None	Central General Extract	0	3	Negative	None	n/a	n/a	200	n/a	None	A	80	Automatic Controls	Floor 0m
1-P1-196	Preparation Room	1	Operating Theatre Suite	25	18	warm air via AHU Battery	Local / BMS Adjustable Sensor	Yes	Comfort Cooled Fresh Air	Central Supply Air	10	0	Positive	F7	43	41	500	n/a	None	A	90	Switch	General working plane 1m
1-P1-197	IV Store	1	Storage Area Equipment	28	16	Adjacent Space Transfer Air	None	No	None	Central General Extract	0	3	Negative	None	n/a	n/a	200	n/a	None	A	80	Automatic Controls	Floor 0m

Room No.	Room Name	Qty	Room Function	Temp (max)	Temp (min)	Heating Type	Heating Control	Cooling (present)	Cooling (type)	Ventilation (type)	Supply (ac/hr)	Extract (ac/hr)	Relative pressure	Min filtration	Surface temp	Water temp	Normal lux	Night lux	Local lux	Standby grade	Colour render	Control	Plane
1-P1-001	Corridor	1	Corridor	28	18	Radiant Panels	Remote Sensor Adj.	No	None	None	0	0	n/a	None	43	n/a	200	n/a	None	A	80	Automatic Controls	Floor 0m
1-P1-019	Corridor	1	Corridor	28	18	Radiant Panels	Remote Sensor Adj.	No	None	None	0	0	n/a	None	43	n/a	200	n/a	None	A	80	Automatic Controls	Floor 0m
1-P1-037	Corridor	1	Corridor	28	18	Radiant Panels	Remote Sensor Adj.	No	None	None	0	0	n/a	None	43	n/a	200	n/a	None	A	80	Automatic Controls	Floor 0m
1-P1-062	Corridor	1	Corridor	28	18	None	None	No	None	None	0	0	n/a	None	n/a	n/a	200	n/a	None	A	80	Automatic Controls	Floor 0m
1-P1-082	Corridor	1	Corridor	28	18	Radiant Panels	Remote Sensor Adj.	No	None	None	0	0	n/a	None	43	n/a	200	n/a	None	A	80	Automatic Controls	Floor 0m
1-P1-082A	Corridor	1	Corridor	28	18	Radiant Panels	Remote Sensor Adj.	No	None	None	0	0	n/a	None	43	n/a	200	n/a	None	A	80	Automatic Controls	Floor 0m
1-P1-082B	Corridor	1	Corridor	28	18	Radiant Panels	Remote Sensor Adj.	No	None	None	0	0	n/a	None	43	n/a	200	n/a	None	A	80	Automatic Controls	Floor 0m
1-P1-110	Corridor	1	Corridor	28	18	Radiant Panels	Remote Sensor Adj.	No	None	None	0	0	n/a	None	43	n/a	200	n/a	None	A	80	Automatic Controls	Floor 0m
1-P1-114	Corridor	1	Corridor	28	18	None	None	No	None	None	0	0	n/a	None	n/a	n/a	200	n/a	None	A	80	Automatic Controls	Floor 0m
1-P1-115	Corridor	1	Corridor	28	18	Radiant Panels	Remote Sensor Adj.	No	None	None	0	0	n/a	None	43	n/a	200	n/a	None	A	80	Automatic Controls	Floor 0m
1-P1-125	Corridor	1	Corridor	28	18	Radiant Panels	Remote Sensor Adj.	No	None	None	0	0	n/a	None	43	n/a	200	n/a	None	A	80	Automatic Controls	Floor 0m
1-P1-126	Corridor	1	Corridor	28	18	Radiant Panels	Remote Sensor Adj.	No	None	None	0	0	n/a	None	43	n/a	200	n/a	None	A	80	Automatic Controls	Floor 0m
1-P1-142	Corridor	1	Corridor	28	18	Radiant Panels	Remote Sensor Adj.	No	None	None	0	0	n/a	None	43	n/a	200	n/a	None	A	80	Automatic Controls	Floor 0m
1-P1-150	Corridor	1	Corridor	28	18	Radiant Panels	Remote Sensor Adj.	No	None	None	0	0	n/a	None	43	n/a	200	n/a	None	A	80	Automatic Controls	Floor 0m
1-P1-166	Corridor	1	Corridor	28	18	Radiant Panels	Remote Sensor Adj.	No	None	None	0	0	n/a	None	43	n/a	200	n/a	None	A	80	Automatic Controls	Floor 0m
1-P1-166A	Corridor	1	Corridor	28	18	Radiant Panels	Remote Sensor Adj.	No	None	None	0	0	n/a	None	43	n/a	200	n/a	None	A	80	Automatic Controls	Floor 0m
1-P1-166B	Corridor	1	Corridor	28	18	Radiant Panels	Remote Sensor Adj.	No	None	None	0	0	n/a	None	43	n/a	200	n/a	None	A	80	Automatic Controls	Floor 0m
1-P1-189	Corridor	1	Corridor	28	18	None	None	No	None	None	0	0	n/a	None	n/a	n/a	200	n/a	None	A	80	Automatic Controls	Floor 0m
1-P1-190	Corridor	1	Corridor	28	18	None	None	No	None	None	0	0	n/a	None	n/a	n/a	200	n/a	None	A	80	Automatic Controls	Floor 0m
1-P1-199	Corridor	1	Corridor	28	18	None	None	No	None	None	0	0	n/a	None	n/a	n/a	200	n/a	None	A	80	Automatic Controls	Floor 0m
1-P1-182	Switch Cupboard	1	Switch Cupboard	Not Controlled	Not Controlled	None	None	No	None	None	0	0	n/a	None	n/a	n/a	100	n/a	None	A	80	Automatic Controls	Floor 0m
1-P1-182A	Switch Cupboard	1	Switch Cupboard	Not Controlled	Not Controlled	None	None	No	None	None	0	0	n/a	None	n/a	n/a	100	n/a	None	A	80	Automatic Controls	Floor 0m
1-P1-183B	Switch Cupboard	1	Switch Cupboard	Not Controlled	Not Controlled	None	None	No	None	None	0	0	n/a	None	n/a	n/a	100	n/a	None	A	80	Automatic Controls	Floor 0m
1-P1-191	Switch Cupboard	1	Switch Cupboard	Not Controlled	Not Controlled	None	None	No	None	None	0	0	n/a	None	n/a	n/a	100	n/a	None	A	80	Automatic Controls	Floor 0m
1-P1-192	Switch Cupboard	1	Switch Cupboard	Not Controlled	Not Controlled	None	None	No	None	None	0	0	n/a	None	n/a	n/a	100	n/a	None	A	80	Automatic Controls	Floor 0m
G-Q1-002	IPS Room	1	IPS Room	30	18	Adjacent Space Transfer Air	None	No	None	Central General Extract	0	0	n/a	None	n/a	n/a	200	n/a	None	A	80	Automatic Controls	Floor 0m
G-Q1-003	Nappy Change Room with handwash	1	Toilet	28	18	Radiant Panels	Remote Sensor Adj.	No	None	Central Dirty Extract	0	10	Negative	None	43	41	200	n/a	None	A	80	Automatic Controls	Floor 0m
G-Q1-004	General X-Ray Room	1	Diagnostic room	25	18	Warm Air - Reheat Battery	BMS Adjustable Sensor	Yes	Ceiling Cassette - Chilled Water	Central Supply and Extract	8	8	Balanced	F7	43	41	300	n/a	1000	A	80	Switch / Dimmer	General working plane 1m
G-Q1-005	Changing Cubicles	1	Changing Facilities	28	18	Radiant Panels	Remote Sensor Adj.	Yes	Comfort Cooled Fresh Air	Central Supply and Extract	5	4	Positive	F7	43	n/a	100	n/a	None	A	80	Automatic Controls	Floor 0m
G-Q1-006	Changing Cubicles	1	Changing Facilities	28	18	Radiant Panels	Remote Sensor Adj.	Yes	Comfort Cooled Fresh Air	Central Supply and Extract	5	4	Positive	F7	43	n/a	100	n/a	None	A	80	Automatic Controls	Floor 0m
G-Q1-007	Trolley Bay	1	Circulation Equipment Storage Bays	28	16	Radiant Panels	Remote Sensor Adj.	No	None	None	0	0	n/a	None	43	n/a	200	n/a	None	A	80	Automatic Controls	Floor 0m
G-Q1-008	Processing Area	1	Diagnostic room	25	18	Radiant Panels	Remote Sensor Adj.	Yes	Ceiling Cassette - Chilled Water	Central Supply and Extract	8	8	Balanced	F7	43	41	300	n/a	1000	A	80	Switch / Dimmer	General working plane 1m
G-Q1-009	Acute Reporting	1	Cellular / Ward Offices	28	18	Radiant Panels	Remote Sensor Adj.	Yes	Ceiling Cassette - Chilled Water	Central Supply and Extract	4 people at 10 l/s per person (6ach)	4 people at 10 l/s per person (6ach)	Balanced	F7	43	n/a	400	n/a	None	A	80	Switch	Desk 0.75 to 0.85m
G-Q1-010	Ultrasound Room	1	Diagnostic room	25	18	Radiant Panels	Remote Sensor Adj.	Yes	Ceiling Cassette - Chilled Water	Central Supply and Extract	15	15	Balanced	F7	43	41	300	n/a	1000	A	80	Switch / Dimmer	General working plane 1m
G-Q1-011	Changing Cubicles	1	Changing Facilities	28	18	Radiant Panels	Remote Sensor Adj.	Yes	Comfort Cooled Fresh Air	Central Supply and Extract	5	4	Positive	F7	43	n/a	100	n/a	None	A	80	Automatic Controls	Floor 0m
G-Q1-012	General X-Ray Room	1	Diagnostic room	25	18	Warm Air - Reheat Battery	BMS Adjustable Sensor	Yes	Ceiling Suspended Unit	Central Supply and Extract	8	8	Balanced	F7	43	41	300	n/a	1000	A	80	Switch / Dimmer	General working plane 1m
G-Q1-013	Changing Cubicles	1	Changing Facilities	28	18	Radiant Panels	Remote Sensor Adj.	Yes	Comfort Cooled Fresh Air	Central Supply and Extract	5	4	Positive	F7	43	n/a	100	n/a	None	A	80	Automatic Controls	Floor 0m
G-Q1-014	Ultrasound Room	1	Diagnostic room	25	18	Warm Air - Reheat Battery	BMS Adjustable Sensor	Yes	Ceiling Cassette - Chilled Water	Central Supply and Extract	15	15	Balanced	F7	43	41	300	n/a	1000	A	80	Switch / Dimmer	General working plane 1m
G-Q1-015	Changing Cubicles	1	Changing Facilities	28	18	Radiant Panels	Remote Sensor Adj.	Yes	Comfort Cooled Fresh Air	Central Supply and Extract	5	4	Positive	F7	43	n/a	100	n/a	None	A	80	Automatic Controls	Floor 0m
G-Q1-016	Screening Room (fluoroscopy)	1	Diagnostic room	25	18	Warm Air - Reheat Battery	BMS Adjustable Sensor	Yes	Ceiling Suspended Unit	Central Supply and Extract	15	15	Balanced	F7	43	41	300	n/a	1000	A	80	Switch / Dimmer	General working plane 1m
G-Q1-017	Preparation Room	1	Consulting Room	25	18	Radiant Panels	Remote Sensor Adj.	Yes	Comfort Cooled Fresh Air	Central Supply Air	10	0	Positive	F7	43	41	300	n/a	1000	A	80	Switch	General working plane 1m
G-Q1-018	Ultrasound Sub Wait	1	Waiting Room	28	18	Radiant Panels	Remote Sensor Adj.	Yes	Comfort Cooled Fresh Air	Central Supply and Extract	6 people at 10 l/s per person (10ach)	6 people at 10 l/s per person (10ach)	Balanced	F7	43	n/a	300	n/a	None	A	80	Automatic Controls	Floor 0m
G-Q1-019	WC - Wheelchair accessible	1	Toilet	28	18	Adjacent Space Transfer Air	None	No	None	Central Dirty Extract	0	10	Negative	None	n/a	41	200	n/a	None	A	80	Automatic Controls	Floor 0m
G-Q1-020	Patient Interview Room	1	Meeting Room	25	18	Radiant Panels	Remote Sensor Adj.	Yes	Ceiling Cassette - Chilled Water	Central Supply & Exract	4	4	Balanced	F7	43	n/a	300	n/a	None	A	80	Switch	Desk 0.75 to 0.85m
G-Q1-021	Baby Infant / Feeding Room	1	Baby Feeding	28	18	Radiant Panels	Remote Sensor Adj.	No	None	Central Dirty Extract	0	10	Negative	None	43	41	100	n/a	None	A	80	Switch	Floor 0m
G-Q1-022	WC - Wheelchair accessible	1	Toilet	28	18	Adjacent Space Transfer Air	None	No	None	Central Dirty Extract	0	10	Negative	None	n/a	41	200	n/a	None	A	80	Automatic Controls	Floor 0m
G-Q1-023	Registrars Office (5 desks)	1	Cellular / Ward Offices	28	18	Radiant Panels	Remote Sensor Adj.	Yes	Ceiling Cassette - Chilled Water	Central Supply and Extract	6	4	Positive	F7	43	n/a	400	n/a	None	A	80	Switch	Desk 0.75 to 0.85m
G-Q1-024	Dirty Utility	1	Dirty utility	28	18	Adjacent Space Transfer Air	None	No	None	Central Dirty Extract	0	6	Negative	None	n/a	41	200	n/a	None	A	80	Automatic Controls	Floor 0m
G-Q1-025	Radioactive Waste Store	1	Storage Area Equipment	28	16	Radiant Panels	Remote Sensor Adj.	No	None	Central General Extract	0	10	Negative	None	43	n/a	200	n/a	None	A	80	Automatic Controls	Floor 0m
G-Q1-027	Cold Waiting Area	1	Waiting Room	28	18	Radiant Panels	Remote Sensor Adj.	Yes	Comfort Cooled Fresh Air	Central Supply and Extract	6 people at 10 l/s per person (8ach)	6 people @ 10 l/s/p + Make Up Air (12ach)	Positive	F7	43	n/a	300	n/a	None	A	80	Automatic Controls	Floor 0m

Room No.	Room Name	Qty	Room Function	Temp (max)	Temp (min)	Heating Type	Heating Control	Cooling (present)	Cooling (type)	Ventilation (type)	Supply (ac/hr)	Extract (ac/hr)	Relative pressure	Min filtration	Surface temp	Water temp	Normal lux	Night lux	Local lux	Standby grade	Colour render	Control	Plane
G-Q1-028	Preparation Room	1	Consulting Room	25	18	Radiant Panels	Remote Sensor Adj.	Yes	Comfort Cooled Fresh Air	Central Supply Air	10	0	Positive	F7	43	41	300	n/a	1000	A	80	Switch	General working plane 1m
G-Q1-029	WC - Wheelchair accessible (hot)	1	Toilet	28	18	Adjacent Space Transfer Air	None	No	None	Central Dirty Extract	0	10	Negative	None	n/a	41	200	n/a	None	A	80	Automatic Controls	Floor 0m
G-Q1-030	Gamma Camera Admin Office	1	Cellular / Ward Offices	28	18	Radiant Panels	Remote Sensor Adj.	Yes	Wall Mounted Unit	Central Supply and Extract	4	3	Positive	F7	43	n/a	400	n/a	None	A	80	Switch	Desk 0.75 to 0.85m
G-Q1-031	Medical Physics Office	1	Cellular / Ward Offices	28	18	Radiant Panels	Remote Sensor Adj.	Yes	Ceiling Cassette - Chilled Water	Central Supply and Extract	4	3	Positive	F7	43	n/a	400	n/a	None	A	80	Switch	Desk 0.75 to 0.85m
G-Q1-032	Gamma Camera Reporting	1	Cellular / Ward Offices	28	18	Radiant Panels	Remote Sensor Adj.	Yes	Ceiling Cassette - Chilled Water	Central Supply and Extract	4	3	Positive	F7	43	n/a	400	n/a	None	A	80	Switch	Desk 0.75 to 0.85m
G-Q1-033	Emergency Shower	1	Bathroom	28	20	Adjacent Space Transfer Air	None	No	None	Central Dirty Extract	0	10	Negative	None	n/a	41	200	n/a	None	A	80	Automatic Controls	Floor 0m
G-Q1-034	Hot Waiting Area	1	Waiting Room	28	18	Radiant Panels	Remote Sensor Adj.	Yes	Comfort Cooled Fresh Air	Central Supply and Extract	6 people at 10 l/s per person (8ach)	6 people @ 10 l/s/p + Make Up Air(12ach)	Positive	F7	43	n/a	300	n/a	None	A	80	Automatic Controls	Floor 0m
G-Q1-035	Injection Room	1	Consulting Room	25	18	Radiant Panels	Remote Sensor Adj.	Yes	Ceiling Cassette - Chilled Water	Central Supply Air	10	0	Positive	F7	43	41	300	n/a	1000	A	80	Switch	General working plane 1m
G-Q1-036	Recovery Area	1	Recovery Bay / Recovery Room	25	20	Radiant Panels	Remote Sensor Adj.	Yes	Comfort Cooled Fresh Air	Central Supply and Extract	15	15	Balanced	F7	43	41	500	n/a	None	A	90	Switch / Dimmer	Bed / Trolley 1.45m
G-Q1-037	Changing Cubicles	1	Changing Facilities	28	18	Radiant Panels	Remote Sensor Adj.	Yes	Comfort Cooled Fresh Air	Central Supply and Extract	5	4	Positive	F7	43	n/a	100	n/a	None	A	80	Automatic Controls	Floor 0m
G-Q1-039	Gamma Camera	1	Diagnostic room	25	18	Radiant Panels	Remote Sensor Adj.	Yes	Wall Mounted Unit & Ceiling Suspended Unit	Central Supply and Extract	15	15	Balanced	F7	43	41	300	n/a	1000	A	80	Switch / Dimmer	General working plane 1m
G-Q1-042	Gamma Camera Control Area	1	Consulting Room	25	18	Radiant Panels	Remote Sensor Adj.	Yes	Ceiling Cassette - Chilled Water	Central Supply and Extract	6	4	Positive	F7	43	41	300	n/a	1000	A	80	Switch	Bed / Trolley 1.45m
G-Q1-043	Changing Cubicles	1	Changing Facilities	28	18	Radiant Panels	Remote Sensor Adj.	Yes	Comfort Cooled Fresh Air	Central Supply and Extract	5	4	Positive	F7	43	n/a	100	n/a	None	A	80	Automatic Controls	Floor 0m
G-Q1-044	Gamma Camera	1	Diagnostic room	25	18	Radiant Panels	Remote Sensor Adj.	Yes	Wall Mounted Unit & Ceiling Suspended Unit	Central Supply and Extract	15	15	Balanced	F7	43	41	300	n/a	1000	A	80	Switch / Dimmer	General working plane 1m
G-Q1-045	Injection Room	1	Consulting Room	25	18	Radiant Panels	Remote Sensor Adj.	Yes	Ceiling Cassette - Chilled Water	Central Supply and Extract	10	0	Positive	F7	43	41	300	n/a	1000	A	80	Switch	General working plane 1m
G-Q1-046	Stress Room (myocardial work)	1	Consulting Room	25	18	Radiant Panels	Remote Sensor Adj.	Yes	Ceiling Cassette - Chilled Water	Central Supply and Extract	3	3	Balanced	F7	43	41	300	n/a	1000	A	80	Switch	Bed / Trolley 1.45m
G-Q1-047	Hot Waiting Area	1	Waiting Room	28	18	Radiant Panels	Remote Sensor Adj.	Yes	Ceiling Cassette - Chilled Water	Central Supply and Extract	6 people at 10 l/s per person (8ach)	6 people at 10 l/s per person (8ach)	Balanced	F7	43	n/a	300	n/a	None	A	80	Automatic Controls	Floor 0m
G-Q1-048	WC - Wheelchair accessible (hot)	1	Toilet	28	18	Adjacent Space Transfer Air	None	No	None	Central Dirty Extract	0	10	Negative	None	n/a	41	200	n/a	None	A	80	Automatic Controls	Floor 0m
G-Q1-049	WC - Wheelchair accessible (cold)	1	Toilet	28	18	Adjacent Space Transfer Air	None	No	None	Central Dirty Extract	0	10	Negative	None	n/a	41	200	n/a	None	A	80	Automatic Controls	Floor 0m
G-Q1-050	Cold Waiting Area	1	Waiting Room	28	18	Radiant Panels	Remote Sensor Adj.	Yes	Comfort Cooled Fresh Air	Central Supply and Extract	6 people at 10 l/s per person (8ach)	6 people at 10 l/s per person (8ach)	Balanced	F7	43	n/a	300	n/a	None	A	80	Automatic Controls	Floor 0m
G-Q1-052	Counting Laboratory	1	Laboratory	25	18	Radiant Panels	Remote Sensor Adj.	Yes	Ceiling Cassette - Chilled Water	Central Supply and Extract	6 people at 10 l/s per person (6ach)	6 people at 10 l/s per person (6ach)	Balanced	F7	43	60	500	n/a	None	A	80	Switch	General working plane 1m
G-Q1-053	DSR	1	DSR	28	18	Adjacent Space Transfer Air	None	No	None	Central Dirty Extract	0	6	Negative	None	n/a	60	100	n/a	None	A	80	Automatic Controls	Floor 0m
G-Q1-054	Meeting Room - 4 person	1	Meeting Room	25	18	Radiant Panels	Remote Sensor Adj.	Yes	Wall Mounted Unit	Central Supply and Extract	4 people at 10 l/s per person (10ach)	4 people at 10 l/s per person (10ach)	Balanced	F7	43	n/a	300	n/a	None	A	80	Switch	Desk 0.75 to 0.85m
G-Q1-055	Meeting Room - 6 person	1	Meeting Room	25	18	Radiant Panels	Remote Sensor Adj.	Yes	Ceiling Cassette - Chilled Water	Central Supply and Extract	6 people at 10 l/s per person (9ach)	6 people at 10 l/s per person (9ach)	Balanced	F7	43	n/a	300	n/a	None	A	80	Switch	Desk 0.75 to 0.85m
G-Q1-057	Other Clinical Staff Office (7 Person)	1	Cellular / Ward Offices	28	18	Radiant Panels	Remote Sensor Adj.	Yes	Ceiling Cassette - Chilled Water	Central Supply and Extract	6	4	Positive	F7	43	n/a	400	n/a	None	A	80	Switch	Desk 0.75 to 0.85m
G-Q1-058	Acute Reporting	1	Cellular / Ward Offices	28	18	Radiant Panels	Remote Sensor Adj.	Yes	Ceiling Cassette - Chilled Water	Central Supply and Extract	10 people at 10 l/s per person (5ach)	10 people at 10 l/s per person (5ach)	Balanced	F7	43	n/a	400	n/a	None	A	80	Switch	Desk 0.75 to 0.85m
G-Q1-059	CT Room	1	Diagnostic room	25	18	Radiant Panels	Remote Sensor Adj.	Yes	Wall Mounted Unit & Ceiling Suspended Unit	Central Supply and Extract	15	15	Balanced	F7	43	41	300	n/a	1000	A	80	Switch / Dimmer	General working plane 1m
G-Q1-061	Disabled Toilet	1	Toilet	28	18	Adjacent Space Transfer Air	None	No	None	Central Dirty Extract	0	10	Negative	None	n/a	41	200	n/a	None	A	80	Automatic Controls	Floor 0m
G-Q1-062	WC - Patients	1	Toilet	28	18	Adjacent Space Transfer Air	None	No	None	Central Dirty Extract	0	10	Negative	None	n/a	41	200	n/a	None	A	80	Automatic Controls	Floor 0m
G-Q1-063	Linen Bay	1	Linen Bay	28	16	Adjacent Space Transfer Air	None	No	None	None	0	0	n/a	None	n/a	n/a	100	n/a	None	A	80	Automatic Controls	Floor 0m
G-Q1-064	Resuscitation Trolley Bay	1	Circulation Equipment Storage Bays	28	16	Adjacent Space Transfer Air	None	No	None	None	0	0	n/a	None	n/a	n/a	200	n/a	None	A	80	Automatic Controls	Floor 0m
G-Q1-066	Preparation Room	1	Consulting Room	25	18	Radiant Panels	Remote Sensor Adj.	Yes	Comfort Cooled Fresh Air	Central Supply Air	10	0	Positive	F7	43	41	300	n/a	1000	A	80	Switch	General working plane 1m
G-Q1-067	Disabled Toilet	1	Toilet	28	18	Adjacent Space Transfer Air	None	No	None	Central Dirty Extract	0	10	Negative	None	n/a	41	200	n/a	None	A	80	Automatic Controls	Floor 0m
G-Q1-068	Toilets	1	Toilet	28	18	Adjacent Space Transfer Air	None	No	None	Central Dirty Extract	0	10	Negative	None	n/a	41	200	n/a	None	A	80	Automatic Controls	Floor 0m
G-Q1-069	Changing Cubicles	1	Changing Facilities	28	18	Radiant Panels	Remote Sensor Adj.	Yes	Comfort Cooled Fresh Air	Central Supply and Extract	5	4	Positive	F7	43	n/a	100	n/a	None	A	80	Automatic Controls	Floor 0m
G-Q1-070	Changing Cubicles	1	Changing Facilities	28	18	Radiant Panels	Remote Sensor Adj.	Yes	Comfort Cooled Fresh Air	Central Supply and Extract	5	4	Positive	F7	43	n/a	100	n/a	None	A	80	Automatic Controls	Floor 0m
G-Q1-071	Control Room - CT	1	Cellular / Ward Offices	25	18	Radiant Panels	Remote Sensor Adj.	Yes	Wall Mounted Unit	Central Supply and Extract	5 people at 10 l/s per person (4ach)	5 people at 10 l/s per person (4ach)	Balanced	F7	43	n/a	400	n/a	None	A	80	Switch	Desk 0.75 to 0.85m
G-Q1-072	Teleradiology Reporting	1	Cellular / Ward Offices	28	18	Radiant Panels	Remote Sensor Adj.	Yes	Ceiling Cassette - Chilled Water	Central Supply and Extract	4 people at 10 l/s per person (4ach)	4 people at 10 l/s per person (4ach)	Balanced	F7	43	n/a	400	n/a	None	A	80	Switch	Desk 0.75 to 0.85m
G-Q1-073	Quiet Reporting	1	Cellular / Ward Offices	28	18	Radiant Panels	Remote Sensor Adj.	Yes	Ceiling Cassette - Chilled Water	Central Supply and Extract	8 people at 10 l/s per person (5ach)	8 people at 10 l/s per person (5ach)	Balanced	F7	43	n/a	400	n/a	None	A	80	Switch	Desk 0.75 to 0.85m
G-Q1-074	Consultant Office (5 person)	1	Cellular / Ward Offices	28	18	Radiant Panels	Remote Sensor Adj.	Yes	Ceiling Cassette - Chilled Water	Central Supply and Extract	6	4	Positive	F7	43	n/a	400	n/a	None	A	80	Switch	Desk 0.75 to 0.85m
G-Q1-075	Consultant Office (5 person)	1	Cellular / Ward Offices	28	18	Radiant Panels	Remote Sensor Adj.	Yes	Ceiling Cassette - Chilled Water	Central Supply and Extract	6	4	Positive	F7	43	n/a	400	n/a	None	A	80	Switch	Desk 0.75 to 0.85m
G-Q1-076	Ultrasound Admin Office	1	Cellular / Ward Offices	28	18	Radiant Panels	Remote Sensor Adj.	Yes	Ceiling Cassette - Chilled Water	Central Supply and Extract	4	3	Positive	F7	43	n/a	400	n/a	None	A	80	Switch	Desk 0.75 to 0.85m
G-Q1-077	Admin Office	1	Cellular / Ward Offices	28	18	Radiant Panels	Remote Sensor Adj.	Yes	Ceiling Cassette - Chilled Water	Central Supply and Extract	6	4	Positive	F7	43	n/a	400	n/a	None	A	80	Switch	Desk 0.75 to 0.85m

Room No.	Room Name	Qty	Room Function	Temp (max)	Temp (min)	Heating Type	Heating Control	Cooling (present)	Cooling (type)	Ventilation (type)	Supply (ac/hr)	Extract (ac/hr)	Relative pressure	Min filtration	Surface temp	Water temp	Normal lux	Night lux	Local lux	Standby grade	Colour render	Control	Plane
G-Q1-078	Waiting Area - Main Dept	1	Waiting Room	28	18	Radiant Panels	Remote Sensor Adj.	Yes	Ceiling Cassette - Chilled Water	Central Supply and Extract	31 people at 10 l/s per person (10ach)	31 people at 10 l/s per person (10ach)	Balanced	F7	43	n/a	300	n/a	None	A	80	Switch	Floor 0m
G-Q1-079	Reception	1	Reception	28	18	Radiant Panels	Remote Sensor Adj.	Yes	Ceiling Cassette - Chilled Water	Central Supply Air	4	0	Positive	F7	43	n/a	300	n/a	None	A	80	Switch	Desk 0.75 to 0.85m
G-Q1-080	Waiting Area	1	Waiting Room	28	18	Radiant Panels	Remote Sensor Adj.	Yes	Ceiling Cassette - Chilled Water	Central Supply and Extract	20 people at 10 l/s per person (8ach)	20 people at 10 l/s per person (13ach)	Balanced	F7	43	n/a	300	n/a	None	A	80	Switch	Floor 0m
G-Q1-081	Doppler Ultrasound	1	Diagnostic room	25	18	Radiant Panels	Remote Sensor Adj.	Yes	Comfort Cooled Fresh Air	Central Supply and Extract	15	15	Balanced	F7	43	41	300	n/a	1000	A	80	Switch / Dimmer	General working plane 1m
G-Q1-082	Meeting Room - 4 person	1	Meeting Room	25	18	Radiant Panels	Remote Sensor Adj.	Yes	Wall Mounted Unit	Central Supply and Extract	4 people at 10 l/s per person (9ach)	4 people at 10 l/s per person (9ach)	Balanced	F7	43	n/a	300	n/a	None	A	80	Switch	Desk 0.75 to 0.85m
G-Q1-083	Photocopy Room	1	Cellular / Ward Offices	28	18	Adjacent Space Transfer Air	None	No	None	Central General Extract	0	3	Negative	None	n/a	n/a	400	n/a	None	A	80	Automatic Controls	Desk 0.75 to 0.85m
G-Q1-084	Disposal Hold	1	Disposal Hold	28	16	Adjacent Space Transfer Air	None	No	None	Central Dirty Extract	0	6	Negative	None	n/a	n/a	200	n/a	None	A	80	Automatic Controls	Floor 0m
G-Q1-086	Control Room - MRI	1	Cellular / Ward Offices	25	18	Radiant Panels	Remote Sensor Adj.	Yes	Wall Mounted Unit	Central Supply and Extract	6	4	Positive	F7	43	n/a	400	n/a	None	A	80	Switch	Desk 0.75 to 0.85m
G-Q1-089	Inpatient Holding Bays	1	Circulation Equipment Storage Bays	28	16	Radiant Panels	Remote Sensor Adj.	Yes	Ceiling Cassette - Chilled Water	Central Supply and Extract	10	6	Positive	F7	43	n/a	200	n/a	None	A	80	Automatic Controls	Floor 0m
G-Q1-092	MRI Room	1	Diagnostic room	25	18	Warm Air - Reheat Battery	BMS Adjustable Sensor	Yes	By Specialist	Central Supply and Extract	15	15	Balanced	F7	43	n/a	300	n/a	1000	A	80	Switch / Dimmer	General working plane 1m
G-Q1-094	Sub Wait	1	Waiting Room	28	18	Radiant Panels	Remote Sensor Adj.	Yes	Comfort Cooled Fresh Air	Central Supply and Extract	6 people at 10 l/s per person (13ach)	6 people at 10 l/s per person (13ach)	Balanced	F7	43	n/a	300	n/a	None	A	80	Switch	Floor 0m
G-Q1-095	Changing Cubicles	1	Changing Facilities	28	18	Radiant Panels	Remote Sensor Adj.	Yes	Comfort Cooled Fresh Air	Central Supply and Extract	5	4	Positive	F7	43	n/a	100	n/a	None	A	80	Automatic Controls	Floor 0m
G-Q1-096	Changing Cubicles	1	Changing Facilities	28	18	Radiant Panels	Remote Sensor Adj.	Yes	Comfort Cooled Fresh Air	Central Supply and Extract	5	4	Positive	F7	43	n/a	100	n/a	None	A	80	Automatic Controls	Floor 0m
G-Q1-097	WC - Wheelchair accessible	1	Toilet	28	18	Adjacent Space Transfer Air	None	No	None	Central Dirty Extract	0	10	Negative	None	n/a	41	200	n/a	None	A	80	Automatic Controls	Floor 0m
G-Q1-098	Recovery Bays	1	Recovery	28	16	Radiant Panels	Remote Sensor Adj.	Yes	Comfort Cooled Fresh Air	Central Supply and Extract	15	15	Balanced	F7	43	41	500	n/a	None	A	90	Switch	Floor 0m
G-Q1-099	Equipment Room	1	Storage Area Equipment	28	16	Adjacent Space Transfer Air	None	Yes	Floor Mounted Close Control	Central General Extract	0	3	Negative	None	n/a	n/a	200	n/a	None	A	80	Automatic Controls	Floor 0m
G-Q1-100	Equipment Room	1	Storage Area Equipment	28	16	Adjacent Space Transfer Air	None	Yes	Floor Mounted Close Control	Central General Extract	0	3	Negative	None	n/a	n/a	200	n/a	None	A	80	Automatic Controls	Floor 0m
G-Q1-102	DSR	1	DSR	28	18	Adjacent Space Transfer Air	None	No	None	Central Dirty Extract	0	6	Negative	None	n/a	60	100	n/a	None	A	80	Automatic Controls	Floor 0m
G-Q1-103	Changing Cubicles	1	Changing Facilities	28	18	Radiant Panels	Remote Sensor Adj.	Yes	Comfort Cooled Fresh Air	Central Supply and Extract	5	4	Positive	F7	43	n/a	100	n/a	None	A	80	Automatic Controls	Floor 0m
G-Q1-104	Changing Cubicles	1	Changing Facilities	28	18	Radiant Panels	Remote Sensor Adj.	Yes	Comfort Cooled Fresh Air	Central Supply and Extract	5	4	Positive	F7	43	n/a	100	n/a	None	A	80	Automatic Controls	Floor 0m
G-Q1-105	Changing Cubicles	1	Changing Facilities	28	18	Radiant Panels	Remote Sensor Adj.	Yes	Comfort Cooled Fresh Air	Central Supply and Extract	5	4	Positive	F7	43	n/a	100	n/a	None	A	80	Automatic Controls	Floor 0m
G-Q1-106	Changing Cubicles	1	Changing Facilities	28	18	Radiant Panels	Remote Sensor Adj.	Yes	Comfort Cooled Fresh Air	Central Supply and Extract	5	4	Positive	F7	43	n/a	100	n/a	None	A	80	Automatic Controls	Floor 0m
G-Q1-108	Injection Room	1	Treatment Room	25	18	Radiant Panels	Remote Sensor Adj.	Yes	Comfort Cooled Fresh Air	Central Supply Air	10	0	Positive	F7	43	41	500	n/a	1000	A	90	Switch	Bed / Trolley 1.45m
G-Q1-109	Toilets	1	Toilet	28	18	Adjacent Space Transfer Air	None	No	None	Central Dirty Extract	0	10	Negative	None	n/a	41	200	n/a	None	A	80	Automatic Controls	Floor 0m
G-Q1-110	MRI Room	1	Diagnostic room	25	18	Warm Air - Reheat Battery	BMS Adjustable Sensor	Yes	By Specialist	Central Supply and Extract	15	15	Balanced	F7	43	n/a	300	n/a	1000	A	80	Switch / Dimmer	General working plane 1m
G-Q1-111	Control Room - MRI	1	Control Room - MRI	25	18	Radiant Panels	Remote Sensor Adj.	Yes	Ceiling Suspended Unit	Central Supply and Extract	6	4	Positive	F7	43	n/a	400	n/a	None	A	80	Switch	Desk 0.75 to 0.85m
G-Q1-112	Clean Utility	1	Clean Utility	28	18	Radiant Panels	Remote Sensor Adj.	Yes	Comfort Cooled Fresh Air	Central Supply Air	6	0	Positive	F7	43	41	150	n/a	None	A	80	Automatic Controls	General working plane 1m
G-Q1-113	Dirty Utility	1	Dirty utility	28	18	Adjacent Space Transfer Air	None	No	None	Central Dirty Extract	0	6	Negative	None	n/a	41	200	n/a	None	A	80	Automatic Controls	Floor 0m
G-Q1-114	Store Room	1	Storage Area Equipment	28	16	Radiant Panels	Remote Sensor Adj.	No	None	Central General Extract	0	3	Negative	None	43	n/a	200	n/a	None	A	80	Automatic Controls	Floor 0m
G-Q1-115	Adult Waiting Area	1	Waiting Room	28	18	Radiant Panels	Remote Sensor Adj.	Yes	Comfort Cooled Fresh Air	Central Supply and Extract	4 people at 10 l/s per person (7ach)	4 people at 10 l/s per person (7ach)	Balanced	F7	43	n/a	300	n/a	None	A	80	Switch	Floor 0m
G-Q1-119	Waiting Area	1	Waiting Room	28	18	Radiant Panels	Remote Sensor Adj.	Yes	Comfort Cooled Fresh Air	Central Supply and Extract	4 people at 10 l/s per person (4ach)	4 people at 10 l/s per person (4ach)	Balanced	F7	43	n/a	300	n/a	None	A	80	Switch	Floor 0m
G-Q1-120	MRI Reporting	1	Cellular / Ward Offices	28	18	Radiant Panels	Remote Sensor Adj.	Yes	Ceiling Cassette - Chilled Water	Central Supply and Extract	4 people at 10 l/s per person (5ach)	4 people at 10 l/s per person (5ach)	Balanced	F7	43	n/a	400	n/a	None	A	80	Switch	Desk 0.75 to 0.85m
G-Q1-121	Baby Infant / Feeding Room	1	Baby Feeding	28	18	Radiant Panels	Remote Sensor Adj.	No	None	Central Dirty Extract	0	10	Negative	None	43	41	100	n/a	None	A	80	Switch	Floor 0m
G-Q1-123	MRI Room	1	Diagnostic room	25	18	Warm Air - Reheat Battery	BMS Adjustable Sensor	Yes	By Specialist	Central Supply and Extract	15	15	Balanced	F7	43	n/a	300	n/a	1000	A	80	Switch / Dimmer	General working plane 1m
G-Q1-124	Equipment Room	1	Storage Area Equipment	28	16	Adjacent Space Transfer Air	None	Yes	Floor Mounted Close Control	Central General Extract	0	3	Negative	None	n/a	n/a	200	n/a	None	A	80	Automatic Controls	Floor 0m
G-Q1-125	Recovery Area - 1 place	1	Treatment Room	25	18	Radiant Panels	Remote Sensor Adj.	Yes	Comfort Cooled Fresh Air	Central Supply and Extract	15	15	Balanced	F7	43	41	500	n/a	1000	A	90	Switch	Bed / Trolley 1.45m
G-Q1-126	WC - Wheelchair accessible	1	Toilet	28	18	Adjacent Space Transfer Air	None	No	None	Central Dirty Extract	0	10	Negative	None	n/a	41	200	n/a	None	A	80	Automatic Controls	Floor 0m
G-Q1-127	WC - Wheelchair accessible & change	1	Toilet	28	18	Radiant Panels	Remote Sensor Adj.	No	None	Central Dirty Extract	0	10	Negative	None	43	41	200	n/a	None	A	80	Automatic Controls	Floor 0m
G-Q1-128	Accessible Changing Cubicles	1	Changing Facilities	28	18	Radiant Panels	Remote Sensor Adj.	Yes	Comfort Cooled Fresh Air	Central Supply and Extract	5	4	Positive	F7	43	n/a	100	n/a	None	A	80	Automatic Controls	Floor 0m
G-Q1-129	Accessible Changing Cubicles	1	Changing Facilities	28	18	Radiant Panels	Remote Sensor Adj.	Yes	Comfort Cooled Fresh Air	Central Supply and Extract	5	4	Positive	F7	43	n/a	100	n/a	None	A	80	Automatic Controls	Floor 0m
G-Q1-130	Induction Area - 1 place	1	Treatment Room	25	18	Radiant Panels	Remote Sensor Adj.	Yes	Ceiling Cassette - Chilled Water	Central Supply and Extract	15	15	Balanced	F7	43	41	500	n/a	1000	A	90	Switch	Bed / Trolley 1.45m
G-Q1-131	Staff WC	1	Toilet	28	18	Adjacent Space Transfer Air	None	No	None	Central Dirty Extract	0	10	Negative	None	n/a	41	200	n/a	None	A	80	Automatic Controls	Floor 0m
G-Q1-132	WC - Wheelchair accessible	1	Toilet	28	18	Adjacent Space Transfer Air	None	No	None	Central Dirty Extract	0	10	Negative	None	n/a	41	200	n/a	None	A	80	Automatic Controls	Floor 0m
G-Q1-133	Equipment Room - MRI	1	IT equipment (comms server)	25	18	None	None	Yes	Floor Mounted Close Control	Central General Extract	0	3	Negative	None	n/a	n/a	300	n/a	None	A	80	Switch	Floor 0m
G-Q1-134	MRI Room	1	Diagnostic room	25	18	Warm Air - Reheat Battery	BMS Adjustable Sensor	Yes	By Specialist	Central Supply and Extract	15	15	Balanced	F7	43	n/a	300	n/a	1000	A	80	Switch / Dimmer	General working plane 1m
G-Q1-135	Control Room - CT/MRI	1	Cellular / Ward Offices	25	18	Radiant Panels	Remote Sensor Adj.	Yes	Ceiling Cassette - Chilled Water	Central Supply and Extract	6	4	Positive	F7	43	n/a	400	n/a	None	A	80	Switch	Desk 0.75 to 0.85m
G-Q1-136	CT Room	1	Diagnostic room	25	18	Warm Air - Reheat Battery	BMS Adjustable Sensor	Yes	Ceiling Suspended Unit	Central Supply and Extract	15	15	Balanced	F7	43	41	300	n/a	1000	A	80	Switch / Dimmer	General working plane 1m

Room No.	Room Name	Qty	Room Function	Temp (max)	Temp (min)	Heating Type	Heating Control	Cooling (present)	Cooling (type)	Ventilation (type)	Supply (ac/hr)	Extract (ac/hr)	Relative pressure	Min filtration	Surface temp	Water temp	Normal lux	Night lux	Local lux	Standby grade	Colour render	Control	Plane
G-Q1-137	Main Reporting	1	Cellular / Ward Offices	28	18	Radiant Panels	Remote Sensor Adj.	Yes	Ceiling Cassette - Chilled Water	Central Supply and Extract	10 people @ 10 l/s/p	10 people @ 10 l/s/p	Balanced	F7	43	n/a	400	n/a	None	A	80	Switch	Desk 0.75 to 0.85m
G-Q1-138	Resuscitation Trolley Bay	1	Circulation Equipment Storage Bays	28	16	Adjacent Space Transfer	None	No	None	None	0	0	n/a	None	n/a	n/a	200	n/a	None	A	80	Automatic Controls	Floor 0m
G-Q1-139	Linen Bay	1	Linen Bay	28	16	Adjacent Space Transfer	None	No	None	None	0	0	n/a	None	n/a	n/a	100 (KNX)	n/a	None	A	80	Automatic Controls	Floor 0m
G-Q1-140	IPS Room	1	IPS Room	30	18	Adjacent Space Transfer Air	None	No	None	Central General Extract	0	3	Negative	None	n/a	n/a	200	n/a	None	A	80	Automatic Controls	Floor 0m
G-Q1-141	Dental Room	1	Consulting Room	25	18	Radiant Panels	Remote Sensor Adj.	Yes	Ceiling Cassette - Chilled Water	Central Supply and Extract	10	10	Balanced	F7	43	41	300	n/a	1000	A	80	Switch	Bed / Trolley 1.45m
G-Q1-142	Disposal Hold	1	Disposal Hold	28	16	Adjacent Space Transfer Air	None	No	None	Central Dirty Extract	0	6	Negative	None	n/a	n/a	200	n/a	None	A	80	Automatic Controls	Floor 0m
G-Q1-143	Staff WC	1	Toilet	28	18	Adjacent Space Transfer Air	None	No	None	Central Dirty Extract	0	10	Negative	None	n/a	41	200	n/a	None	A	80	Automatic Controls	Floor 0m
G-Q1-144	Female Staff Changing and Lockers	1	Changing Facilities	28	18	Radiant Panels	Remote Sensor Adj.	Yes	Comfort Cooled Fresh Air	Central Supply and Extract	5	4	Positive	F7	43	41	100	n/a	None	A	80	Automatic Controls	Floor 0m
G-Q1-145	Trolley Bay	1	Circulation Equipment Storage Bays	28	16	Adjacent Space Transfer Air	None	Yes	Comfort Cooled Fresh Air	None	0	0	n/a	F7	n/a	n/a	200	n/a	None	A	80	Automatic Controls	Floor 0m
G-Q1-146	Staff WC	1	Toilet	28	18	Adjacent Space Transfer Air	None	No	None	Central Dirty Extract	0	10	Negative	None	n/a	41	200	n/a	None	A	80	Automatic Controls	Floor 0m
G-Q1-148	Store Room	1	Storage Area Equipment	28	16	Radiant Panels	Remote Sensor Adj.	No	None	Central General Extract	0	3	Negative	None	43	n/a	200	n/a	None	A	80	Automatic Controls	Floor 0m
G-Q1-149	Resource Room / Library	1	Open Plan Office	28	18	Radiant Panels	Remote Sensor Adj.	Yes	Ceiling Cassette - Chilled Water	Central Supply and Extract	24 people at 10 l/s per person (9ach)	24 people at 10 l/s per person (9ach)	Balanced	F7	43	n/a	400	n/a	None	A	80	Switch	Desk 0.75 to 0.85m
G-Q1-150	Male Staff Changing and Lockers	1	Changing Facilities	28	18	Radiant Panels	Remote Sensor Adj.	Yes	Comfort Cooled Fresh Air	Central Supply and Extract	5	4	Positive	F7	43	41	100	n/a	None	A	80	Automatic Controls	Floor 0m
G-Q1-151	Consultant Office (5 person)	1	Cellular / Ward Offices	28	18	Radiant Panels	Remote Sensor Adj.	Yes	Ceiling Cassette - Chilled Water	Central Supply and Extract	6	4	Positive	F7	43	n/a	400	n/a	None	A	80	Switch	Desk 0.75 to 0.85m
G-Q1-152	Admin Office	1	Cellular / Ward Offices	28	18	Radiant Panels	Remote Sensor Adj.	Yes	Ceiling Cassette - Chilled Water	Central Supply and Extract	6	4	Positive	F7	43	n/a	400	n/a	None	A	80	Switch	Desk 0.75 to 0.85m
G-Q1-153	Reception Area	1	Reception	28	18	Radiant Panels	Remote Sensor Adj.	Yes	Ceiling Cassette - Chilled Water	Central Supply and Extract	24 people @ 10 l/s/p	24 people @ 10 l/s/p	Balanced	F7	43	n/a	300	n/a	None	A	80	Switch	Desk 0.75 to 0.85m
G-Q1-160	Shelled Space	1	Shelled Space	28	18	Radiant Panels	Remote Sensor Adj.	No	None	Central Supply and Extract	6	4	Positive	F7	43	n/a	300	n/a	None	A	80	Switch	Floor 0m
G-Q1-161	Trolley Bay	1	Circulation Equipment Storage Bays	28	16	Adjacent Space Transfer Air	None	No	None	None	0	0	n/a	None	n/a	n/a	200	n/a	None	A	80	Automatic Controls	Floor 0m
G-Q1-001	Corridor	1	Corridor	28	18	Radiant Panels	Remote Sensor Adj.	No	None	None	0	0	n/a	None	43	n/a	200	n/a	None	A	80	Automatic Controls	Floor 0m
G-Q1-001A	Corridor	1	Corridor	28	18	None	None	No	None	None	0	0	n/a	None	None	n/a	200	n/a	None	A	80	Automatic Controls	Floor 0m
G-Q1-001B	Corridor	1	Corridor	28	18	Radiant Panels	Remote Sensor Adj.	No	None	None	0	0	n/a	None	43	n/a	200	n/a	None	A	80	Automatic Controls	Floor 0m
G-Q1-026	Corridor	1	Corridor	28	18	None	None	No	None	None	0	0	n/a	None	None	n/a	200	n/a	None	A	80	Automatic Controls	Floor 0m
G-Q1-038	Corridor	1	Corridor	28	18	Radiant Panels	Remote Sensor Adj.	No	None	None	0	0	n/a	None	43	n/a	200	n/a	None	A	80	Automatic Controls	Floor 0m
G-Q1-040	Corridor	1	Corridor	28	18	Radiant Panels	Remote Sensor Adj.	No	None	None	0	0	n/a	None	43	n/a	200	n/a	None	A	80	Automatic Controls	Floor 0m
G-Q1-051	Corridor	1	Corridor	28	18	None	None	No	None	None	0	0	n/a	None	n/a	n/a	200	n/a	None	A	80	Automatic Controls	Floor 0m
G-Q1-056	Corridor	1	Corridor	28	18	Radiant Panels	Remote Sensor Adj.	No	None	None	0	0	n/a	None	43	n/a	200	n/a	None	A	80	Automatic Controls	Floor 0m
G-Q1-065	Corridor	1	Corridor	28	18	None	None	No	None	None	0	0	n/a	None	n/a	n/a	200	n/a	None	A	80	Automatic Controls	Floor 0m
G-Q1-065A	Corridor	1	Corridor	28	18	None	None	No	None	None	0	0	n/a	None	n/a	n/a	200	n/a	None	A	80	Automatic Controls	Floor 0m
G-Q1-065B	Corridor	1	Corridor	28	18	None	None	No	None	None	0	0	n/a	None	n/a	n/a	200	n/a	None	A	80	Automatic Controls	Floor 0m
G-Q1-085	Corridor	1	Corridor	28	18	Radiant Panels	Remote Sensor Adj.	No	None	None	0	0	n/a	None	43	n/a	200	n/a	None	A	80	Automatic Controls	Floor 0m
G-Q1-087	Corridor	1	Corridor	28	18	Radiant Panels	Remote Sensor Adj.	No	None	None	0	0	n/a	None	43	n/a	200	n/a	None	A	80	Automatic Controls	Floor 0m
G-Q1-107	Corridor	1	Corridor	28	18	Adjacent Space Transfer	None	No	None	None	0	0	n/a	None	n/a	n/a	200	n/a	None	A	80	Automatic Controls	Floor 0m
G-Q1-116	Corridor	1	Corridor	28	18	Radiant Panels	Remote Sensor Adj.	No	None	None	0	0	n/a	None	43	n/a	200	n/a	None	A	80	Automatic Controls	Floor 0m
G-Q1-122	Corridor	1	Corridor	28	18	Adjacent Space Transfer	None	No	None	None	0	0	n/a	None	n/a	n/a	200	n/a	None	A	80	Automatic Controls	Floor 0m
G-Q1-147	Corridor	1	Corridor	28	18	Radiant Panels	Remote Sensor Adj.	No	None	None	0	0	n/a	None	43	n/a	200	n/a	None	A	80	Automatic Controls	Floor 0m
G-Q1-162	Corridor	1	Corridor	28	18	Adjacent Space Transfer	None	No	None	None	0	0	n/a	None	n/a	n/a	200	n/a	None	A	80	Automatic Controls	Floor 0m
G-Q1-155	Switch Cupboard	1	Switch Cupboard	Not Controlled	Not Controlled	None	None	No	None	None	0	0	n/a	None	n/a	n/a	100	n/a	None	A	80	Automatic Controls	Floor 0m
G-Q1-156	Switch Cupboard	1	Switch Cupboard	Not Controlled	Not Controlled	None	None	No	None	None	0	0	n/a	None	n/a	n/a	100	n/a	None	A	80	Automatic Controls	Floor 0m
G-Q1-157	Switch Cupboard	1	Switch Cupboard	Not Controlled	Not Controlled	None	None	No	None	None	0	0	n/a	None	n/a	n/a	100	n/a	None	A	80	Automatic Controls	Floor 0m
G-Q1-158	Switch Cupboard	1	Switch Cupboard	Not Controlled	Not Controlled	None	None	No	None	None	0	0	n/a	None	n/a	n/a	100	n/a	None	A	80	Automatic Controls	Floor 0m
2-R1-001	Staff Room	1	Common room/staff room/lounge	28	18	Radiant Panels	Remote Sensor Adj.	Yes	Comfort Cooled Fresh Air	Central Supply and Extract	6	8	Negative	F7	43	41	300	n/a	None	A	80	Switch	Floor 0m
2-R1-002	Dictation/ 1:1/Phone Booth	1	Cellular / Ward Offices	28	18	Adjacent Space Transfer	None	Yes	Comfort Cooled Fresh Air	Central Supply and Extract	2 people at 10 l/s per person (6ach)	2 people at 10 l/s per person (6ach)	Balanced	F7	n/a	n/a	400	n/a	None	A	80	Automatic Controls	Desk 0.75 to 0.85m
2-R1-003	Meeting Room - 4 person	1	Cellular / Ward Offices	28	18	Radiant Panels	Remote Sensor Adj.	Yes	Wall Mounted Unit	Central Supply and Extract	4 people at 10 l/s per person (9ach)	4 people at 10 l/s per person (9ach)	Balanced	F7	43	n/a	400	n/a	None	A	80	Automatic Controls	Desk 0.75 to 0.85m
2-R1-004	Dictation/ 1:1/Phone Booth	1	Cellular / Ward Offices	28	18	Adjacent Space Transfer	None	Yes	Comfort Cooled Fresh Air	Central Supply and Extract	2 people at 10 l/s per person (6ach)	2 people at 10 l/s per person (6ach)	Balanced	F7	n/a	n/a	400	n/a	None	A	80	Automatic Controls	Desk 0.75 to 0.85m
2-R1-005	Beverage Bay	1	Tea Making	28	18	Adjacent Space Transfer Air	None	No	None	Central General Extract	0	5	Negative	None	n/a	41	100 (KNX)	n/a	None	A	80	switch	Floor 0m
2-R1-006	Meeting Room - 6 person	1	Cellular / Ward Offices	28	18	Radiant Panels	Remote Sensor Adj.	Yes	Wall Mounted Unit	Central Supply and Extract	6 people at 10 l/s per person (9ach)	6 people at 10 l/s per person (9ach)	Balanced	F7	43	n/a	400	n/a	None	A	80	Automatic Controls	Desk 0.75 to 0.85m
2-R1-007	DSR	1	DSR	28	18	Adjacent Space Transfer Air	None	No	None	Central Dirty Extract	0	6	Negative	None	n/a	60	100	n/a	None	A	80	Automatic Controls	Floor 0m
2-R1-008	Store Clinical	1	Storage Area Equipment	28	16	Adjacent Space Transfer Air	None	No	None	Central General Extract	0	3	Negative	None	n/a	n/a	200	n/a	None	A	80	Automatic Controls	Floor 0m

Room No.	Room Name	Qty	Room Function	Temp (max)	Temp (min)	Heating Type	Heating Control	Cooling (present)	Cooling (type)	Ventilation (type)	Supply (ac/hr)	Extract (ac/hr)	Relative pressure	Min filtration	Surface temp	Water temp	Normal lux	Night lux	Local lux	Standby grade	Colour render	Control	Plane
2-R1-009	Printer/Photocopier Room	1	Cellular / Ward Offices	28	18	Adjacent Space Transfer Air	None	Yes	Wall Mounted Unit	Central General Extract	0	3	Negative	None	n/a	n/a	400	n/a	None	A	80	Automatic Controls	Desk 0.75 to 0.85m
2-R1-010	Dictation/ 1:1/Phone Booth	1	Cellular / Ward Offices	28	18	Adjacent Space Transfer	None	Yes	Comfort Cooled Fresh Air	Central Supply and Extract	2 people at 10 l/s per person (6ach)	2 people at 10 l/s per person (6ach)	Balanced	F7	n/a	n/a	400	n/a	None	A	80	Automatic Controls	Desk 0.75 to 0.85m
2-R1-011	Dictation/ 1:1/Phone Booth	1	Cellular / Ward Offices	28	18	Adjacent Space Transfer	None	Yes	Comfort Cooled Fresh Air	Central Supply and Extract	2 people at 10 l/s per person (6ach)	2 people at 10 l/s per person (6ach)	Balanced	F7	n/a	n/a	400	n/a	None	A	80	Automatic Controls	Desk 0.75 to 0.85m
2-R1-012	Dictation/ 1:1/Phone Booth	1	Cellular / Ward Offices	28	18	Adjacent Space Transfer	None	Yes	Comfort Cooled Fresh Air	Central Supply and Extract	2 people at 10 l/s per person (6ach)	2 people at 10 l/s per person (6ach)	Balanced	F7	n/a	n/a	400	n/a	None	A	80	Automatic Controls	Desk 0.75 to 0.85m
2-R1-013	WC - Staff (Female)	1	toilet	28	18	Radiant Panels	Remote Sensor Adj.	No	None	Central Dirty Extract	0	10	Negative	None	43	41	200	n/a	None	A	80	Automatic Controls	Floor 0m
2-R1-014	WC - Staff (Male)	1	Toilet	28	18	Radiant Panels	Remote Sensor Adj.	No	None	Central Dirty Extract	0	10	Negative	None	43	41	200	n/a	None	A	80	Automatic Controls	Floor 0m
2-R1-015	Meeting Room - 6 person	1	Cellular / Ward Offices	28	18	Radiant Panels	Remote Sensor Adj.	Yes	Wall Mounted Unit	Central Supply and Extract	6 people at 10 l/s per person (8ach)	6 people at 10 l/s per person (8ach)	Balanced	F7	43	n/a	400	n/a	None	A	80	Automatic Controls	Desk 0.75 to 0.85m
2-R1-016	WC - Wheelchair Accessible	1	Toilet	28	18	Adjacent Space Transfer Air	None	No	None	Central Dirty Extract	0	10	Negative	None	n/a	41	200	n/a	None	A	80	Automatic Controls	Floor 0m
2-R1-017	Dictation/ 1:1/Phone Booth	1	Cellular / Ward Offices	28	18	Adjacent Space Transfer	None	Yes	Comfort Cooled Fresh Air	Central Supply and Extract	2 people at 10 l/s per person (6ach)	2 people at 10 l/s per person (6ach)	Balanced	F7	n/a	n/a	400	n/a	None	A	80	Automatic Controls	Desk 0.75 to 0.85m
2-R1-018	Dictation/ 1:1/Phone Booth	1	Cellular / Ward Offices	28	18	Adjacent Space Transfer	None	Yes	Comfort Cooled Fresh Air	Central Supply and Extract	2 people at 10 l/s per person (6ach)	2 people at 10 l/s per person (6ach)	Balanced	F7	n/a	n/a	400	n/a	None	A	80	Automatic Controls	Desk 0.75 to 0.85m
2-R1-019	Dictation/ 1:1/Phone Booth	1	Cellular / Ward Offices	28	18	Adjacent Space Transfer	None	Yes	Comfort Cooled Fresh Air	Central Supply and Extract	2 people at 10 l/s per person (6ach)	2 people at 10 l/s per person (6ach)	Balanced	F7	n/a	n/a	400	n/a	None	A	80	Automatic Controls	Desk 0.75 to 0.85m
2-R1-020	Printer/Photocopier Room	1	Cellular / Ward Offices	28	18	Radiant Panels	Remote Sensor Adj.	Yes	Wall Mounted Unit	Central General Extract	0	3	Negative	None	43	n/a	400	n/a	None	A	80	Automatic Controls	Desk 0.75 to 0.85m
2-R1-021	Beverage Bay	1	Tea Making	28	18	Adjacent Space Transfer Air	None	No	None	Central General Extract	0	5	Negative	None	n/a	41	100	n/a	None	A	80	switch	Floor 0m
2-R1-022	Disposal Hold (small)	1	Disposal Hold	28	16	Adjacent Space Transfer Air	None	No	None	Central Dirty Extract	0	6	Negative	None	n/a	n/a	200	n/a	None	A	80	Automatic Controls	Floor 0m
2-R1-023	Meeting Room - 4 person	1	Cellular / Ward Offices	28	18	Radiant Panels	Remote Sensor Adj.	Yes	Wall Mounted Unit	Central Supply and Extract	4 people at 10 l/s per person (8ch)	4 people at 10 l/s per person (8ach)	Balanced	F7	43	n/a	400	n/a	None	A	80	Switch	Desk 0.75 to 0.85m
2-R1-024	Dictation/ 1:1/Phone Booth	1	Cellular / Ward Offices	28	18	Radiant Panels	Remote Sensor Adj.	Yes	Wall Mounted Unit	Central Supply and Extract	2 people at 10 l/s per person (6ach)	2 people at 10 l/s per person (6ach)	Balanced	F7	43	n/a	400	n/a	None	A	80	Automatic Controls	Desk 0.75 to 0.85m
2-R1-025	Dictation/ 1:1/Phone Booth	1	Cellular / Ward Offices	28	18	Radiant Panels	Remote Sensor Adj.	Yes	Comfort Cooled Fresh Air	Central Supply and Extract	2 people at 10 l/s per person (6ach)	2 people at 10 l/s per person (6ach)	Balanced	F7	43	n/a	400	n/a	None	A	80	Automatic Controls	Desk 0.75 to 0.85m
2-R1-026	Beverage Bay	1	Tea Making	28	18	Adjacent Space Transfer Air	None	No	None	Central General Extract	0	5	Negative	None	n/a	41	200	n/a	None	A	80	switch	Floor 0m
2-R1-027	Meeting Room - 4 person	1	Cellular / Ward Offices	28	18	Radiant Panels	Remote Sensor Adj.	Yes	Wall Mounted Unit	Central Supply and Extract	4 people at 10 l/s per person (8ch)	4 people at 10 l/s per person (8ach)	Positive	F7	43	n/a	400	n/a	None	A	80	switch	Desk 0.75 to 0.85m
2-R1-028	Meeting Room - 4 person	1	Cellular / Ward Offices	28	18	Radiant Panels	Remote Sensor Adj.	Yes	Wall Mounted Unit	Central Supply and Extract	4 people at 10 l/s per person (8ch)	4 people at 10 l/s per person (8ach)	Positive	F7	43	n/a	400	n/a	None	A	80	switch	Desk 0.75 to 0.85m
2-R1-029	Dictation/ 1:1/Phone Booth	1	Cellular / Ward Offices	28	18	Adjacent Space Transfer	None	Yes	Comfort Cooled Fresh Air	Central Supply and Extract	2 people at 10 l/s per person (6ach)	2 people at 10 l/s per person (6ach)	Balanced	F7	n/a	n/a	400	n/a	None	A	80	Automatic Controls	Desk 0.75 to 0.85m
2-R1-030	Dictation/ 1:1/Phone Booth	1	Cellular / Ward Offices	28	18	Adjacent Space Transfer	None	Yes	Comfort Cooled Fresh Air	Central Supply and Extract	2 people at 10 l/s per person (6ach)	2 people at 10 l/s per person (6ach)	Balanced	F7	n/a	n/a	400	n/a	None	A	80	Automatic Controls	Desk 0.75 to 0.85m
2-R1-031	Dictation/ 1:1/Phone Booth	1	Cellular / Ward Offices	28	18	Adjacent Space Transfer	None	Yes	Comfort Cooled Fresh Air	Central Supply and Extract	2 people at 10 l/s per person (6ach)	2 people at 10 l/s per person (6ach)	Balanced	F7	n/a	n/a	400	n/a	None	A	80	Automatic Controls	Desk 0.75 to 0.85m
2-R1-032	WC - Wheelchair Accessible	1	toilet	28	18	Adjacent Space Transfer Air	None	No	None	Central Dirty Extract	0	10	Negative	None	n/a	41	200	n/a	None	A	80	Automatic Controls	Floor 0m
2-R1-033	WC - Staff (Male)	1	toilet	28	18	Radiant Panels	Remote Sensor Adj.	No	None	Central Dirty Extract	0	10	Negative	None	43	41	200	n/a	None	A	80	Automatic Controls	Floor 0m
2-R1-034	DSR	1	DSR	28	18	Adjacent Space Transfer Air	None	No	None	Central Dirty Extract	0	6	Negative	None	n/a	60	100	n/a	None	A	80	Automatic Controls	Floor 0m
2-R1-035	Printer/Photocopier Room	1	Cellular / Ward Offices	28	18	Radiant Panels	Remote Sensor Adj.	Yes	Wall Mounted Unit	Central General Extract	0	3	Negative	None	43	n/a	400	n/a	None	A	80	Automatic Controls	Desk 0.75 to 0.85m
2-R1-036	Meeting Room - 4 person	1	Cellular / Ward Offices	28	18	Radiant Panels	Remote Sensor Adj.	Yes	Wall Mounted Unit	Central Supply and Extract	4 people at 10 l/s per person (9ach)	4 people at 10 l/s per person (9ach)	Balanced	F7	43	n/a	400	n/a	None	A	80	Switch	Desk 0.75 to 0.85m
2-R1-037	Store Clinical	1	Storage Area Equipment	28	16	Adjacent Space Transfer Air	None	No	None	Central General Extract	0	3	Negative	None	n/a	n/a	200	n/a	None	A	80	Automatic Controls	Floor 0m
2-R1-038	WC - Staff (Female)	1	Toilet	28	18	Radiant Panels	Remote Sensor Adj.	No	None	Central Dirty Extract	0	10	Negative	None	43	41	200	n/a	None	A	80	Automatic Controls	Floor 0m
2-R1-039	Dictation/ 1:1/Phone Booth	1	Cellular / Ward Offices	28	18	Adjacent Space Transfer	None	Yes	Comfort Cooled Fresh Air	Central Supply and Extract	2 people at 10 l/s per person (6ach)	2 people at 10 l/s per person (6ach)	Balanced	F7	n/a	n/a	400	n/a	None	A	80	Automatic Controls	Desk 0.75 to 0.85m
2-R1-040	Dictation/ 1:1/Phone Booth	1	Cellular / Ward Offices	28	18	Adjacent Space Transfer	None	Yes	Comfort Cooled Fresh Air	Central Supply and Extract	2 people at 10 l/s per person (6ach)	2 people at 10 l/s per person (6ach)	Balanced	F7	n/a	n/a	400	n/a	None	A	80	Automatic Controls	Desk 0.75 to 0.85m
2-R1-041	Dictation/ 1:1/Phone Booth	1	Cellular / Ward Offices	28	18	Radiant Panels	Remote Sensor Adj.	Yes	Comfort Cooled Fresh Air	Central Supply and Extract	2 people at 10 l/s per person (6ach)	2 people at 10 l/s per person (6ach)	Balanced	F7	43	n/a	400	n/a	None	A	80	Automatic Controls	Desk 0.75 to 0.85m
2-R1-042	Dictation/ 1:1/Phone Booth	1	Cellular / Ward Offices	28	18	Adjacent Space Transfer	None	Yes	Comfort Cooled Fresh Air	Central Supply and Extract	2 people at 10 l/s per person (6ach)	2 people at 10 l/s per person (6ach)	Balanced	F7	n/a	n/a	400	n/a	None	A	80	Automatic Controls	Desk 0.75 to 0.85m
2-R1-043	Store Clinical	1	Storage Area Equipment	28	16	Radiant Panels	Remote Sensor Adj.	No	None	Central General Extract	0	3	Negative	None	43	n/a	200	n/a	None	A	80	Automatic Controls	Floor 0m
2-R1-044	Printer/Photocopier Room	1	Cellular / Ward Offices	28	18	Adjacent Space Transfer Air	None	Yes	Wall Mounted Unit	Central General Extract	0	3	Negative	None	n/a	n/a	400	n/a	None	A	80	Automatic Controls	Desk 0.75 to 0.85m
2-R1-045	Meeting Room - 4 person	1	Cellular / Ward Offices	28	18	Radiant Panels	Remote Sensor Adj.	Yes	Wall Mounted Unit	Central Supply and Extract	4 people at 10 l/s per person (9ach)	4 people at 10 l/s per person (9ach)	Balanced	F7	43	n/a	400	n/a	None	A	80	Switch	Desk 0.75 to 0.85m
2-R1-046	Meeting Room - 4 person	1	Cellular / Ward Offices	28	18	Radiant Panels	Remote Sensor Adj.	Yes	Wall Mounted Unit	Central Supply and Extract	4 people at 10 l/s per person (7ach)	4 people at 10 l/s per person (7ach)	Balanced	F7	43	n/a	400	n/a	None	A	80	Switch	Desk 0.75 to 0.85m

Room No.	Room Name	Qty	Room Function	Temp (max)	Temp (min)	Heating Type	Heating Control	Cooling (present)	Cooling (type)	Ventilation (type)	Supply (ac/hr)	Extract (ac/hr)	Relative pressure	Min filtration	Surface temp	Water temp	Normal lux	Night lux	Local lux	Standby grade	Colour render	Control	Plane
2-R1-047	Store Clinical	1	Storage Area Equipment	28	16	Adjacent Space Transfer Air	None	No	None	Central General Extract	0	3	Negative	None	n/a	n/a	200	n/a	None	A	80	Automatic Controls	Floor 0m
2-R1-048	Dictation/ 1:1/Phone Booth	1	Cellular / Ward Offices	28	18	Radiant Panels	Remote Sensor Adj.	Yes	Comfort Cooled Fresh Air	Central Supply and Extract	2 people at 10 l/s per person (6ach)	2 people at 10 l/s per person (6ach)	Balanced	F7	43	n/a	400	n/a	None	A	80	Automatic Controls	Desk 0.75 to 0.85m
2-R1-049A	2nd Floor Desks	1	Open Plan Office	28	18	Radiant Panels	Remote Sensor Adj.	Yes	Ceiling Cassette - Chilled Water	Central Supply and Extract	6	4	Positive	F7	43	n/a	400	n/a	None	A	80	Switch	Desk 0.75 to 0.85m
2-R1-049B	2nd Floor Desks	1	Open Plan Office	28	18	Radiant Panels	Remote Sensor Adj.	Yes	Ceiling Cassette - Chilled Water	Central Supply and Extract	6	4	Positive	F7	43	n/a	400	n/a	None	A	80	Switch	Desk 0.75 to 0.85m
2-R1-050	2nd Floor Desks	1	Open Plan Office	28	18	Radiant Panels	Remote Sensor Adj.	Yes	Comfort Cooled Fresh Air	Central Supply and Extract	6	4	Positive	F7	43	n/a	400	n/a	None	A	80	Switch	Desk 0.75 to 0.85m
2-R1-051A	2nd Floor Desks	1	Open Plan Office	28	18	Radiant Panels	Remote Sensor Adj.	Yes	Comfort Cooled Fresh Air	Central Supply and Extract	6	4	Positive	F7	43	n/a	400	n/a	None	A	80	Switch	Desk 0.75 to 0.85m
2-R1-051B	2nd Floor Desks	1	Open Plan Office	28	18	Radiant Panels	Remote Sensor Adj.	Yes	Ceiling Cassette - Chilled Water	Central Supply and Extract	6	4	Positive	F7	43	n/a	400	n/a	None	A	80	Switch	Desk 0.75 to 0.85m
2-R1-051C	2nd Floor Desks	1	Open Plan Office	28	18	Radiant Panels	Remote Sensor Adj.	Yes	Ceiling Cassette - Chilled Water	Central Supply and Extract	6	4	Positive	F7	43	n/a	400	n/a	None	A	80	Switch	Desk 0.75 to 0.85m
2-R1-052A	2nd Floor Desks	1	Open Plan Office	28	18	Radiant Panels	Remote Sensor Adj.	Yes	Comfort Cooled Fresh Air	Central Supply and Extract	6	4	Positive	F7	43	n/a	400	n/a	None	A	80	Switch	Desk 0.75 to 0.85m
2-R1-052B	2nd Floor Desks	1	Open Plan Office	28	18	Radiant Panels	Remote Sensor Adj.	Yes	Comfort Cooled Fresh Air	Central Supply and Extract	6	4	Positive	F7	43	n/a	400	n/a	None	A	80	Switch	Desk 0.75 to 0.85m
2-R1-052C	2nd Floor Desks	1	Open Plan Office	28	18	Radiant Panels	Remote Sensor Adj.	Yes	Ceiling Cassette - Chilled Water	Central Supply and Extract	6	4	Positive	F7	43	n/a	400	n/a	None	A	80	Switch	Desk 0.75 to 0.85m
2-R1-053	2nd Floor Desks	1	Open Plan Office	28	18	Radiant Panels	Remote Sensor Adj.	Yes	Ceiling Cassette - Chilled Water	Central Supply and Extract	6	4	Positive	F7	43	n/a	400	n/a	None	A	80	Switch	Desk 0.75 to 0.85m
2-R1-054	2nd Floor Desks	1	Open Plan Office	28	18	Radiant Panels	Remote Sensor Adj.	Yes	Comfort Cooled Fresh Air	Central Supply and Extract	6	4	Positive	F7	43	n/a	400	n/a	None	A	80	Switch	Desk 0.75 to 0.85m
2-R1-055A	2nd Floor Desks	1	Open Plan Office	28	18	Radiant Panels	Remote Sensor Adj.	Yes	Ceiling Cassette - Chilled Water	Central Supply and Extract	6	4	Positive	F7	43	n/a	400	n/a	None	A	80	Switch	Desk 0.75 to 0.85m
2-R1-055B	2nd Floor Desks	1	Open Plan Office	28	18	Radiant Panels	Remote Sensor Adj.	Yes	Comfort Cooled Fresh Air	Central Supply and Extract	6	4	Positive	F7	43	n/a	400	n/a	None	A	80	Switch	Desk 0.75 to 0.85m
2-R1-055C	2nd Floor Desks	1	Open Plan Office	28	18	Radiant Panels	Remote Sensor Adj.	Yes	Ceiling Cassette - Chilled Water	Central Supply and Extract	6	4	Positive	F7	43	n/a	400	n/a	None	A	80	Switch	Desk 0.75 to 0.85m
2-R1-055D	2nd Floor Desks	1	Open Plan Office	28	18	Radiant Panels	Remote Sensor Adj.	Yes	Ceiling Cassette - Chilled Water	Central Supply and Extract	6	4	Positive	F7	43	n/a	400	n/a	None	A	80	Switch	Desk 0.75 to 0.85m
4-R1-001	Management Conference Room	1	Meeting Room	25	18	Radiant Panels	Remote Sensor Adj.	Yes	Ceiling Cassette - Chilled Water	Central Supply and Extract	16 people at 10 l/s per person (7ach)	16 people at 10 l/s per person (7ach)	Balanced	F7	43	n/a	300	n/a	None	A	80	Automatic Controls	Desk 0.75 to 0.85m
4-R1-002	Management Conference Room	1	Meeting Room	25	18	Radiant Panels	Remote Sensor Adj.	Yes	Ceiling Cassette - Chilled Water	Central Supply and Extract	16 people at 10 l/s per person (8ach)	16 people at 10 l/s per person (8ach)	Balanced	F7	43	n/a	300	n/a	None	A	80	Automatic Controls	Desk 0.75 to 0.85m
4-R1-003	Meeting Room - 6 person	1	Meeting Room	25	18	Radiant Panels	Remote Sensor Adj.	Yes	Wall Mounted Unit	Central Supply and Extract	6 people at 10 l/s per person (9ach)	6 people at 10 l/s per person (9ach)	Balanced	F7	43	n/a	300	n/a	None	A	80	Switch	Desk 0.75 to 0.85m
4-R1-004	Beverage Bay	1	Tea Making	28	18	Adjacent Space Transfer Air	None	No	None	Central Supply and Extract	4	3	Positive	F7	n/a	41	100 (KNX)	n/a	None	A	80	switch	Floor 0m
4-R1-005	WC - Staff (Male)	1	Toilet	28	18	Adjacent Space Transfer Air	None	No	None	Central Dirty Extract	0	10	Negative	None	n/a	41	200	n/a	None	A	80	Automatic Controls	Floor 0m
4-R1-006	WC - Wheelchair Accessible	1	toilet	28	18	Adjacent Space Transfer Air	None	No	None	Central Dirty Extract	0	10	Negative	None	n/a	41	200	n/a	None	A	80	Automatic Controls	Floor 0m
4-R1-007	Meeting Room - 4 person	1	Cellular / Ward Offices	28	18	Radiant Panels	Remote Sensor Adj.	Yes	Wall Mounted Unit	Central Supply and Extract	4	4	Balanced	F7	43	n/a	400	n/a	None	A	80	Switch	Desk 0.75 to 0.85m
4-R1-008	WC - Staff (Female)	1	Toilet	28	18	Adjacent Space Transfer Air	None	No	None	Central Dirty Extract	0	10	Negative	None	n/a	41	200	n/a	None	A	80	Automatic Controls	Floor 0m
4-R1-009	Staff Room	1	Common room/staff room/lounge	28	18	Radiant Panels	Remote Sensor Adj.	Yes	Comfort Cooled Fresh Air	Central Supply and Extract	4	4	Balanced	F7	43	41	300	n/a	None	A	80	Switch	Floor 0m
4-R1-010	4th Floor Desks	1	Open Plan Office	28	18	Radiant Panels	Remote Sensor Adj.	Yes	Ceiling Cassette - Chilled Water	Central Supply and Extract	6	4	Positive	F7	43	n/a	400	n/a	None	A	80	Switch	Desk 0.75 to 0.85m
4-R1-011	Dictation/ 1:1/Phone Booth	1	Cellular / Ward Offices	28	18	Radiant Panels	Remote Sensor Adj.	Yes	Comfort Cooled Fresh Air	Central Supply and Extract	2 people at 10 l/s per person (4ach)	2 people at 10 l/s per person (3ach)	Balanced	F7	43	n/a	400	n/a	None	A	80	Automatic Controls	Desk 0.75 to 0.85m
4-R1-012	Dictation/ 1:1/Phone Booth	1	Cellular / Ward Offices	28	18	Radiant Panels	Remote Sensor Adj.	Yes	Comfort Cooled Fresh Air	Central Supply and Extract	2 people at 10 l/s per person (4ach)	2 people at 10 l/s per person (3ach)	Balanced	F7	43	n/a	400	n/a	None	A	80	Automatic Controls	Desk 0.75 to 0.85m
4-R1-013	Dictation/ 1:1/Phone Booth	1	Cellular / Ward Offices	28	18	Radiant Panels	Remote Sensor Adj.	Yes	Comfort Cooled Fresh Air	Central Supply and Extract	2 people at 10 l/s per person (4ach)	2 people at 10 l/s per person (3ach)	Balanced	F7	43	n/a	400	n/a	None	A	80	Automatic Controls	Desk 0.75 to 0.85m
4-R1-014	Dictation/ 1:1/Phone Booth	1	Cellular / Ward Offices	28	18	Radiant Panels	Remote Sensor Adj.	Yes	Comfort Cooled Fresh Air	Central Supply and Extract	2 people at 10 l/s per person (4ach)	2 people at 10 l/s per person (3ach)	Balanced	F7	43	n/a	400	n/a	None	A	80	Automatic Controls	Desk 0.75 to 0.85m
4-R1-015	Store Management	1	Cellular / Ward Offices	28	18	Radiant Panels	Remote Sensor Adj.	Yes	Comfort Cooled Fresh Air	Central General Extract	0	3	Negative	None	43	n/a	400	n/a	None	A	80	Switch	Desk 0.75 to 0.85m
4-R1-016	Store Management	1	Cellular / Ward Offices	28	18	Radiant Panels	Remote Sensor Adj.	Yes	Comfort Cooled Fresh Air	Central General Extract	0	3	Negative	None	43	n/a	400	n/a	None	A	80	Switch	Desk 0.75 to 0.85m
4-R1-017	DSR	1	DSR	28	18	Adjacent Space Transfer Air	None	No	None	Central Dirty Extract	0	6	Negative	None	n/a	60	100	n/a	None	A	80	Automatic Controls	Floor 0m
4-R1-018	Disposal Hold (small)	1	Disposal Hold	28	16	Adjacent Space Transfer Air	None	No	None	Central Dirty Extract	0	6	Negative	None	n/a	n/a	200	n/a	None	A	80	Automatic Controls	Floor 0m
4-R1-019	Printer/Photocopier Room	1	Cellular / Ward Offices	28	18	Radiant Panels	Remote Sensor Adj.	Yes	Wall Mounted Unit	Central Supply and Extract	4	3	Positive	F7	43	n/a	400	n/a	None	A	80	Automatic Controls	Desk 0.75 to 0.85m
2-R1-057	Corridor	1	Corridor	28	18	Adjacent Space Transfer	None	No	None	None	0	0	n/a	None	n/a	n/a	200	n/a	None	A	80	Automatic Controls	Floor 0m
2-R1-058	Corridor	1	Corridor	28	18	Adjacent Space Transfer	None	No	None	None	0	0	n/a	None	n/a	n/a	200	n/a	None	A	80	Automatic Controls	Floor 0m
2-R1-059	Corridor	1	Corridor	28	18	Adjacent Space Transfer	None	No	None	None	0	0	n/a	None	n/a	n/a	200	n/a	None	A	80	Automatic Controls	Floor 0m
2-R1-060	Corridor	1	Corridor	28	18	Adjacent Space Transfer	None	No	None	None	0	0	n/a	None	n/a	n/a	200	n/a	None	A	80	Automatic Controls	Floor 0m
2-R1-061	Corridor	1	Corridor	28	18	Adjacent Space Transfer	None	No	None	None	0	0	n/a	None	n/a	n/a	200	n/a	None	A	80	Automatic Controls	Floor 0m
2-R1-062	Corridor	1	Corridor	28	18	Adjacent Space Transfer	None	No	None	None	0	0	n/a	None	n/a	n/a	200	n/a	None	A	80	Automatic Controls	Floor 0m
2-R1-063	Corridor	1	Corridor	28	18	Adjacent Space Transfer	None	No	None	None	0	0	n/a	None	n/a	n/a	200	n/a	None	A	80	Automatic Controls	Floor 0m
4-R1-020	Corridor	1	Corridor	28	18	Radiant Panels	Remote Sensor Adj.	No	None	None	0	0	n/a	None	43	n/a	200	n/a	None	A	80	Automatic Controls	Floor 0m
4-R1-021	Corridor	1	Corridor	28	18	Radiant Panels	Remote Sensor Adj.	No	None	None	0	0	n/a	None	43	n/a	200	n/a	None	A	80	Automatic Controls	Floor 0m
2-R1-064	Switch Cupboard	1	Switch Cupboard	Not Controlled	Not Controlled	None	None	No	None	None	0	0	n/a	None	n/a	n/a	100	n/a	None	A	80	Automatic Controls	Floor 0m
2-R1-065	Switch Cupboard	1	Switch Cupboard	Not Controlled	Not Controlled	None	None	No	None	None	0	0	n/a	None	n/a	n/a	100	n/a	None	A	80	Automatic Controls	Floor 0m

Room No.	Room Name	Qty	Room Function	Temp (max)	Temp (min)	Heating Type	Heating Control	Cooling (present)	Cooling (type)	Ventilation (type)	Supply (ac/hr)	Extract (ac/hr)	Relative pressure	Min filtration	Surface temp	Water temp	Normal lux	Night lux	Local lux	Standby grade	Colour render	Control	Plane
2-R1-066	Switch Cupboard	1	Switch Cupboard	Not Controlled	Not Controlled	None	None	No	None	None	0	0	n/a	None	n/a	n/a	100	n/a	None	A	80	Automatic Controls	Floor 0m
2-R1-067	Switch Cupboard	1	Switch Cupboard	Not Controlled	Not Controlled	None	None	No	None	None	0	0	n/a	None	n/a	n/a	100	n/a	None	A	80	Automatic Controls	Floor 0m
4-R1-022	Switch Cupboard	1	Switch Cupboard	Not Controlled	Not Controlled	None	None	No	None	None	0	0	n/a	None	n/a	n/a	100	n/a	None	A	80	Automatic Controls	Floor 0m
4-R1-023	Switch Cupboard	1	Switch Cupboard	Not Controlled	Not Controlled	None	None	No	None	None	0	0	n/a	None	n/a	n/a	100	n/a	None	A	80	Automatic Controls	Floor 0m
4-R2-002	RHSC Office	1	Cellular / Ward Offices	28	18	Radiant Panels	Remote Sensor Adj.	Yes	Comfort Cooled Fresh Air	Central Supply and Extract	4	3	Positive	F7	43	n/a	400	n/a	None	A	80	Switch	Desk 0.75 to 0.85m
4-R2-003	Assistant Health Records Manager / Supervisors	1	Cellular / Ward Offices	28	18	Radiant Panels	Remote Sensor Adj.	Yes	Comfort Cooled Fresh Air	Central Supply and Extract	4	3	Positive	F7	43	n/a	400	n/a	None	A	80	Switch	Desk 0.75 to 0.85m
4-R2-004	RHSC / DCN Office 17 Person	1	Open Plan Office	28	18	Radiant Panels	Remote Sensor Adj.	Yes	Ceiling Cassette - Chilled Water	Central Supply and Extract	4	3	Positive	F7	43	n/a	400	n/a	None	A	80	Switch	Desk 0.75 to 0.85m
4-R2-005	WC Staff	1	Toilet	28	18	Adjacent Space Transfer Air	None	No	None	Central Dirty Extract	0	10	Negative	None	n/a	41	200	n/a	None	A	80	Automatic Controls	Floor 0m
4-R2-006	Receipt / Dispatch Counter	1	Reception	28	18	Adjacent Space Transfer Air	None	Yes	Wall Mounted Unit	Central Supply and Extract	3	40	Negative	F7	n/a	n/a	300	n/a	None	A	80	Switch	Desk 0.75 to 0.85m
4-R2-007	Trolley Area	1	Circulation Equipment Storage Bays	28	16	Adjacent Space Transfer Air	None	No	None	Central General Extract	0	3	Negative	None	n/a	n/a	200	n/a	None	A	80	Automatic Controls	Floor 0m
4-R2-008	RHSC & DCN Records Library (160,000 records)	1	Storage Area Equipment	28	16	Radiant Panels	Remote Sensor Adj.	Yes	Ceiling Cassette - Chilled Water	Central Supply and Extract	2	3	Negative	F7	43	n/a	200	n/a	None	A	80	Automatic Controls	Floor 0m
4-R2-010	Accessible WC	1	Toilet	28	18	Adjacent Space Transfer Air	None	No	None	Central Dirty Extract	0	10	Negative	None	n/a	41	200	n/a	None	A	80	Automatic Controls	Floor 0m
4-R2-011	Dictation/ 1:1/Phone Booth	1	Cellular / Ward Offices	28	18	Adjacent Space Transfer	None	Yes	Comfort Cooled Fresh Air	Central Supply and Extract	4	3	Positive	F7	n/a	n/a	400	n/a	None	A	80	Switch	Desk 0.75 to 0.85m
4-R2-001	Corridor	1	Corridor	28	18	Radiant Panels	Remote Sensor Adj.	No	None	None	0	0	n/a	None	43	n/a	200	n/a	None	A	80	Automatic Controls	Floor 0m
4-R2-009	Switch Cupboard	1	Switch Cupboard	Not Controlled	Not Controlled	None	None	No	None	None	0	0	n/a	None	n/a	n/a	100	n/a	None	A	80	Automatic Controls	Floor 0m
B-S1-001	Preparation/Cooking Area	1	CDS	28	18	None	None	Yes	Ceiling Cassette - Chilled Water	Central Supply and Extract	36	42	Negative	F7	n/a	60	500	n/a	None	A	80	Switch	General working plane 1m
B-S1-005	Temperature Controlled Sandwich Prep	1	CDS	12	10	None	None	Yes	Ceiling Cassette - DX	General Supply and Extract	2 people at 10 l/s per person (2ach)	2 people at 10 l/s per person (2ach)	Balanced	F7	n/a	41	500	n/a	None	A	80	Switch	General working plane 1m
B-S1-006	Bakery Preparation	1	CDS	12	10	None	None	Yes	Ceiling Cassette - DX	General Supply and Extract	2 people at 10 l/s per person (2ach)	2 people at 10 l/s per person (2ach)	Balanced	F7	n/a	41	500	n/a	None	A	80	Switch	General working plane 1m
B-S1-007	Staff Room	1	Common room/staff room/lounge	28	18	Radiant Panels	Remote Sensor Adj.	Yes	Comfort Cooled Fresh Air	Central Supply and Extract	6	8	Negative	F7	43	41	300	n/a	None	A	80	Switch	Floor 0m
B-S1-008	Office 5 person	1	Cellular / Ward Offices	28	18	Radiant Panels	Remote Sensor Adj.	Yes	Ceiling Cassette - Chilled Water	Central Supply and Extract	5 people at 10 l/s per person (4ach)	5 people at 10 l/s per person (4ach)	Balanced	F7	43	n/a	400	n/a	None	A	80	Switch	Desk 0.75 to 0.85m
B-S1-009	Female Staff Changing inc Shower	1	Changing Facilities	28	18	Radiant Panels	Remote Sensor Adj.	Yes	Comfort Cooled Fresh Air	Central Supply and Extract	5	4	Positive	F7	43	41	100	n/a	None	A	80	Automatic Controls	Floor 0m
B-S1-010	Male Staff Changing inc Shower	1	Changing Facilities	28	18	Radiant Panels	Remote Sensor Adj.	Yes	Comfort Cooled Fresh Air	Central Supply and Extract	5	4	Positive	F7	43	41	100	n/a	None	A	80	Automatic Controls	Floor 0m
B-S1-012	Pan Wash	1	CDS	28	18	None	None	Yes	Ceiling Cassette - Chilled Water	Central Extract	0	6	Negative	None	n/a	60	300	n/a	None	A	80	Switch	General working plane 1m
B-S1-013	Returned Trolleys	1	CDS	28	16	Adjacent Space Transfer Air	None	Yes	Comfort Cooled Fresh Air	General Supply and Extract	16	16	Balanced	F7	n/a	n/a	300	n/a	None	A	80	Automatic Controls	Floor 0m
B-S1-015	Refuse	1	Storage Area Equipment	28	16	Adjacent Space Transfer Air	None	No	None	Central Dirty Extract	0	3	Negative	None	n/a	n/a	200	n/a	None	A	80	Automatic Controls	Floor 0m
B-S1-016	DSR	1	DSR	28	18	Adjacent Space Transfer Air	None	No	None	Central Dirty Extract	0	6	Negative	None	n/a	60	100	n/a	None	A	80	Automatic Controls	Floor 0m
B-S1-017	Clean Trolleys Park	1	CDS	28	16	Adjacent Space Transfer Air	None	No	None	General Supply and Extract	3	3	Balanced	None	n/a	n/a	200	n/a	None	A	80	Automatic Controls	Floor 0m
B-S1-018	Disposables / Detergent	1	DSR	28	18	Adjacent Space Transfer Air	None	No	None	Central Dirty Extract	0	6	Negative	None	n/a	60	100	n/a	None	A	80	Automatic Controls	Floor 0m
B-S1-019	Raw Meat	1	CDS	8	5	None	None	Yes	DX Cooling Unit	None	0	0	n/a	None	n/a	n/a	300	n/a	None	A	80	Switch	General working plane 1m
B-S1-020	Veg Store	1	CDS	28	18	Adjacent Space Transfer Air	None	No	None	Central General Extract	0	3	Negative	None	n/a	n/a	200	n/a	None	A	80	Automatic Controls	Floor 0m
B-S1-021	Freezer	1	CDS	-18	-20	None	None	Yes	DX Cooling Unit	None	0	0	n/a	None	n/a	n/a	300	n/a	None	A	80	Switch	Floor 0m
B-S1-022	Freezer	1	CDS	-18	-20	None	None	Yes	DX Cooling Unit	None	0	0	n/a	None	n/a	n/a	300	n/a	None	A	80	Switch	Floor 0m
B-S1-023	Receipt Bay	1	Circulation Areas	28	18	Radiant Panels	Remote Sensor Adj.	No	None	General Extract	0	6	Negative	None	43	41	200	n/a	None	A	80	Automatic Controls	Floor 0m
B-S1-025	Dairy Store	1	CDS	5	2	None	None	Yes	DX Cooling Unit	None	0	0	Negative	None	n/a	n/a	200	n/a	None	A	80	Automatic Controls	Floor 0m
B-S1-027	Dry Goods	1	Storage Area Equipment	28	16	Adjacent Space Transfer Air	None	No	None	Central General Extract	0	3	Negative	None	n/a	n/a	200	n/a	None	A	80	Automatic Controls	Floor 0m
B-S1-031	Pick and Pack	1	Storage Area Equipment	28	16	Radiant Panels	Remote Sensor Adj.	Yes	Comfort Cooled Fresh Air	General Supply and Extract	3	3	Balanced	None	43	n/a	200	n/a	None	A	80	Automatic Controls	Floor 0m
B-S1-024	Corridor	1	Corridor	28	18	Radiant Panels	Remote Sensor Adj.	No	None	None	0	0	n/a	None	43	n/a	200	n/a	None	A	80	Automatic Controls	Floor 0m
B-S1-030	Lobby	1	Lobby	Not Controlled	Not Controlled	Adjacent Space Transfer	None	No	None	None	0	0	n/a	None	n/a	n/a	200	n/a	None	A	80	Automatic Controls	Floor 0m
B-S1-028	Switch Cupboard	1	Switch Cupboard	Not Controlled	Not Controlled	None	None	No	None	None	0	0	n/a	None	n/a	n/a	100	n/a	None	A	80	Automatic Controls	Floor 0m
B-S1-029	Switch Cupboard	1	Switch Cupboard	Not Controlled	Not Controlled	None	None	No	None	None	0	0	n/a	None	n/a	n/a	100	n/a	None	A	80	Automatic Controls	Floor 0m
2-S2-001	Core Server Room	1	IT equipment (comms server)	25	18	None	None	Yes	Floor Mounted Close Control	Central Supply Air & Emergency Gas Extract System	1	4	Normal Operation Positive	F7	n/a	n/a	300	n/a	None	A	80	Switch	Floor 0m
B-S3-002	Linen Pool (Clean)	1	Linen Bay	28	18	Radiant Panels	Remote Sensor Adj.	No	None	Central General Extract	0	3	Negative	None	43	60	100 (KNX)	n/a	None	A	80	Automatic Controls	Floor 0m
B-S3-003	Supplies Store	1	Storage Area Equipment	28	16	Radiant Panels	Remote Sensor Adj.	No	None	Central General Extract	0	3	Negative	None	43	41	200	n/a	None	A	80	Automatic Controls	Floor 0m
B-S3-004	Laundry (microfibre)	1	Laundry	28	18	Radiant Panels	Remote Sensor Adj.	Yes	Ceiling Cassette - Chilled Water	Central Supply and Extract	6	6	Balanced	F7	43	60	300	n/a	None	A	80	Switch	Floor 0m
B-S3-005	Linen Pool (Dirty)	1	Dirty utility	28	18	Radiant Panels	Remote Sensor Adj.	No	None	Central Dirty Extract	0	6	Negative	None	43	n/a	200	n/a	None	A	80	Automatic Controls	Floor 0m
B-S3-007	Cleaning Equipment Store	1	Storage Area Equipment	28	16	Radiant Panels	Remote Sensor Adj.	No	None	Central General Extract	0	3	Negative	None	43	n/a	200	n/a	None	A	80	Automatic Controls	Floor 0m
B-S3-008	Sanitary Bins Store	1	Dirty utility	28	18	Adjacent Space Transfer Air	None	No	None	Central Dirty Extract	0	6	Negative	None	n/a	41	200	n/a	None	A	80	Automatic Controls	Floor 0m
B-S3-009	DSR	1	DSR	28	18	Adjacent Space Transfer Air	None	No	None	Central Dirty Extract	0	6	Negative	None	n/a	60	100	n/a	None	A	80	Automatic Controls	Floor 0m
B-S3-010	Bulk Equipment Store	1	Storage Area Equipment	28	16	Radiant Panels	Remote Sensor Adj.	No	None	Central General Extract	0	3	Negative	None	43	60	200	n/a	None	A	80	Automatic Controls	Floor 0m

Room No.	Room Name	Qty	Room Function	Temp (max)	Temp (min)	Heating Type	Heating Control	Cooling (present)	Cooling (type)	Ventilation (type)	Supply (ac/hr)	Extract (ac/hr)	Relative pressure	Min filtration	Surface temp	Water temp	Normal lux	Night lux	Local lux	Standby grade	Colour render	Control	Plane
B-S3-011	Dictation/ 1:1/Phone Booth	1	Cellular / Ward Offices	28	18	Radiant Panels	Remote Sensor Adj.	Yes	Wall Mounted Unit	Central Supply and Extract	2 people at 10 l/s per person (7ach)	2 people at 10 l/s per person (7ach)	Balanced	F7	43	n/a	400	n/a	None	A	80	Automatic Controls	Desk 0.75 to 0.85m
B-S3-012	Domestic Service Office	1	Cellular / Ward Offices	28	18	Radiant Panels	Remote Sensor Adj.	Yes	Ceiling Cassette - Chilled Water	Central Supply and Extract	4	3	Positive	F7	43	n/a	400	n/a	None	A	80	Switch	Desk 0.75 to 0.85m
B-S3-013	Curtain Store	1	Storage Area Equipment	28	16	Radiant Panels	Remote Sensor Adj.	No	None	Central General Extract	0	3	Negative	None	43	n/a	200	n/a	None	A	80	Automatic Controls	Floor 0m
B-S3-001	Corridor	1	Corridor	28	18	Adjacent Space Transfer	None	No	None	None	0	0	n/a	None	n/a	n/a	200	n/a	None	A	80	Automatic Controls	Floor 0m
B-S3-006	Corridor	1	Corridor	28	18	Radiant Panels	Remote Sensor Adj.	No	None	Central Supply Air	9	0	Positive	F7	43	n/a	200	n/a	None	A	80	Automatic Controls	Floor 0m
B-S3-030	Switch Cupboard	1	Switch Cupboard	Not Controlled	Not Controlled	None	None	No	None	None	0	0	n/a	None	n/a	n/a	100	n/a	None	A	80	Automatic Controls	Floor 0m
B-S4-001	Storage/Holding Area	1	Storage Area Equipment	28	16	Radiant Panels	Remote Sensor Adj.	No	None	Central General Extract	0	5	Negative	None	43	n/a	200	n/a	None	A	80	Automatic Controls	Floor 0m
B-S4-003	Mailroom	1	Cellular / Ward Offices	28	18	Radiant Panels	Remote Sensor Adj.	Yes	Ceiling Cassette - Chilled Water	Central Supply and Extract	4	3	Positive	F7	43	n/a	400	n/a	None	A	80	Automatic Controls	Desk 0.75 to 0.85m
B-S4-004	Office	1	Cellular / Ward Offices	28	18	Radiant Panels	Remote Sensor Adj.	Yes	Ceiling Cassette - Chilled Water	Central Supply and Extract	4	3	Positive	F7	43	n/a	400	n/a	None	A	80	Automatic Controls	Desk 0.75 to 0.85m
B-S4-005	Porters Office	1	Cellular / Ward Offices	28	18	Radiant Panels	Remote Sensor Adj.	Yes	Ceiling Cassette - Chilled Water	Central Supply and Extract	4	3	Positive	F7	43	n/a	400	n/a	None	A	80	Automatic Controls	Desk 0.75 to 0.85m
B-S4-050	Clocking In	1	Cellular / Ward Offices	28	18	Adjacent Space Transfer	None	No	None	None	0	0	n/a	None	n/a	n/a	400	n/a	None	A	80	Automatic Controls	Desk 0.75 to 0.85m
B-S4-002	Lobby	1	Lobby	Not Controlled	Not Controlled	None	None	No	None	None	0	0	n/a	None	n/a	n/a	200	n/a	None	A	80	Automatic Controls	Floor 0m
2-S5-002	Bay for Token Machine	1	Circulation Equipment Storage Bays	28	16	Adjacent Space Transfer	None	No	None	Central General Extract	0	3	Negative	None	n/a	n/a	200	n/a	None	A	80	Automatic Controls	Floor 0m
2-S5-003	DSR	1	DSR	28	18	Adjacent Space Transfer Air	None	No	None	Central Dirty Extract	0	6	Negative	None	n/a	60	100	n/a	None	A	80	Automatic Controls	Floor 0m
2-S5-004	Male Staff Changing , Shower, WC & Lockers	1	Changing Facilities	28	18	Radiant Panels	Remote Sensor Adj.	Yes	Comfort Cooled Fresh Air	Central Supply and Extract	5	4	Positive	F7	43	41	100	n/a	None	A	80	Automatic Controls	Floor 0m
2-S5-005	Female Staff Changing , Shower, WC & Lockers	1	Changing Facilities	28	18	Radiant Panels	Remote Sensor Adj.	Yes	Comfort Cooled Fresh Air	Central Supply and Extract	5	4	Positive	F7	43	41	100	n/a	None	A	80	Automatic Controls	Floor 0m
2-S5-001	Corridor	1	Corridor	28	18	Adjacent Space Transfer	None	No	None	None	0	0	n/a	None	n/a	n/a	200	n/a	None	A	80	Automatic Controls	Floor 0m
2-S5-006	Corridor	1	Corridor	28	18	Adjacent Space Transfer	None	No	None	None	0	0	n/a	None	n/a	n/a	200	n/a	None	A	80	Automatic Controls	Floor 0m
B-S6-003	BMS Room	1	BMS Room	25	18	Radiant Panels	Remote Sensor Adj.	Yes	Wall Mounted	Central Supply and Extract	4	3	Positive	F7	43	n/a	300	n/a	None	A	80	Switch	Floor 0m
B-S6-004	Workshop (NPD)	1	Small Workshop	28	18	Radiant Panels	Remote Sensor Adj.	Yes	Ceiling Cassette - Chilled Water	Central Supply and Extract	4	6	Negative	F7	43	41	300	n/a	None	A	80	Switch	Desk 0.75 to 0.85m
B-S6-006	Staff Change	1	Changing Facilities	28	18	Radiant Panels	Remote Sensor Adj.	Yes	Comfort Cooled Fresh Air	Central Supply and Extract	5	4	Positive	F7	43	41	100	n/a	None	A	80	Automatic Controls	Floor 0m
B-S6-007	Shower	1	Bathroom	28	20	Adjacent Space Transfer Air	None	No	None	Central Dirty Extract	0	10	Negative	None	n/a	41	200	n/a	None	A	80	Automatic Controls	Floor 0m
B-S6-008	Shower	1	Bathroom	28	20	Adjacent Space Transfer Air	None	No	None	Central Dirty Extract	0	10	Negative	None	n/a	41	200	n/a	None	A	80	Automatic Controls	Floor 0m
B-S6-009	Workshop (NHSL)	1	Small Workshop	28	18	Radiant Panels	Remote Sensor Adj.	Yes	Ceiling Cassette - Chilled Water	Central Supply and Extract	4	6	Negative	F7	43	41	300	n/a	None	A	80	Switch	Desk 0.75 to 0.85m
B-S6-010	Staff WC	1	Toilet	28	18	Adjacent Space Transfer Air	None	No	None	Central Dirty Extract	0	10	Negative	None	n/a	41	200	n/a	None	A	80	Automatic Controls	Floor 0m
B-S6-011	Supervisors	1	Cellular / Ward Offices	28	18	Radiant Panels	Remote Sensor Adj.	Yes	Ceiling Cassette - Chilled Water	Central Supply and Extract	4	3	Positive	F7	43	n/a	400	n/a	None	A	80	Switch	Desk 0.75 to 0.85m
B-S6-012	Estates Library	1	Cellular / Ward Offices	28	18	Radiant Panels	Remote Sensor Adj.	Yes	Wall Mounted	Central Supply and Extract	2	3	Negative	F7	43	n/a	400	n/a	None	A	80	Switch	Desk 0.75 to 0.85m
B-S6-013	Office	1	Cellular / Ward Offices	28	18	Radiant Panels	Remote Sensor Adj.	Yes	Ceiling Cassette - Chilled Water	Central Supply and Extract	4	3	Positive	F7	43	n/a	400	n/a	None	A	80	Switch	Desk 0.75 to 0.85m
B-S6-014	Store	1	Storage Area Equipment	28	16	Radiant Panels	Remote Sensor Adj.	No	None	Central General Extract	0	3	Negative	None	43	n/a	200	n/a	None	A	80	Automatic Controls	Floor 0m
B-S6-015	Contract Manager	1	Cellular / Ward Offices	28	18	Radiant Panels	Remote Sensor Adj.	Yes	Wall Mounted	Central Supply and Extract	4	3	Positive	F7	43	n/a	400	n/a	None	A	80	Switch	Desk 0.75 to 0.85m
G-S6-016	Office / Reception	1	Cellular / Offices	28	18	Electric Heater	Remote Sensor Adj.	No	None	Central Supply and Extract	4	3	Positive	F7	43	n/a	400	n/a	None	A	80	Switch	Desk 0.75 to 0.85m
B-S6-019	Staff WC	1	Toilet	28	18	Adjacent Space Transfer Air	None	No	None	Central Dirty Extract	0	10	Negative	None	n/a	41	200	n/a	None	A	80	Automatic Controls	Floor 0m
G-S6-020	Atrium Cleaning Equipment	1	Storage Area Equipment	28	16	Radiant Panels	Remote Sensor Adj.	No	None	Central General Extract	0	3	Negative	None	43	n/a	200	n/a	None	A	80	Automatic Controls	Floor 0m
B-S6-021	Staff WC	1	Toilet	28	18	Adjacent Space Transfer Air	None	No	None	Central Dirty Extract	0	10	Negative	None	n/a	41	200	n/a	None	A	80	Automatic Controls	Floor 0m
G-S6-022	WC - Staff	1	Toilet	28	18	Electric Heater	Remote Sensor Adj.	No	None	Dirty Extract	0	10	Negative	None	43	41	200	n/a	None	A	80	Automatic Controls	Floor 0m
G-S6-023	Chemical Store	1	Storage Area Equipment	28	16	Electric Heater	Remote Sensor Adj.	No	None	Dedicated Extract System	0	3	n/a	None	43	n/a	200	n/a	None	A	80	Automatic Controls	Floor 0m
G-S6-024	Trolley Holding Bay	1	Circulation Equipment Storage Bays	28	16	Adjacent Space Transfer Air	None	No	None	None	0	0	n/a	None	n/a	n/a	200	n/a	None	A	80	Automatic Controls	Floor 0m
B-S6-025	Trolley Holding Bay	1	Circulation Equipment Storage Bays	28	16	Adjacent Space Transfer Air	None	No	None	None	0	0	n/a	None	n/a	n/a	200	n/a	None	A	80	Automatic Controls	Floor 0m
B-S6-050	Staff Welfare	1	Common room/staff room/lounge	28	18	Radiant Panels	Remote Sensor Adj.	Yes	Comfort Cooled Fresh Air	Central Supply and Extract	12 people at 10 l/s per person (6ach)	12 people at 10 l/s per person (6ach)	Balanced	F7	43	41	300	n/a	None	A	80	Switch	Floor 0m
B-S6-017	Corridor	1	Corridor	28	18	Radiant Panels	Remote Sensor Adj.	No	None	None	0	0	n/a	None	43	n/a	200	n/a	None	A	80	Automatic Controls	Floor 0m
4-S7-002	Male WC	1	Toilet	28	18	Adjacent Space Transfer Air	None	No	None	Central Dirty Extract	0	10	Negative	None	n/a	41	200	n/a	None	A	80	Automatic Controls	Floor 0m
4-S7-003	Female WC	1	Toilet	28	18	Adjacent Space Transfer Air	None	No	None	Central Dirty Extract	0	10	Negative	None	n/a	41	200	n/a	None	A	80	Automatic Controls	Floor 0m
4-S7-004	Male WC	1	Toilet	28	18	Adjacent Space Transfer Air	None	No	None	Central Dirty Extract	0	10	Negative	None	n/a	41	200	n/a	None	A	80	Automatic Controls	Floor 0m
4-S7-007	Disposal Hold	1	Disposal Hold	28	16	Adjacent Space Transfer Air	None	No	None	Central Dirty Extract	0	6	Negative	None	n/a	n/a	200	n/a	None	A	80	Automatic Controls	Floor 0m
4-S7-008	Storage/Dishwashing	1	Storage Area Equipment	28	16	Radiant Panels	Remote Sensor Adj.	No	None	Central General Extract	0	3	Negative	None	43	60	200	n/a	None	A	80	Automatic Controls	Floor 0m
4-S7-009	DSR	1	DSR	28	18	Adjacent Space Transfer Air	None	No	None	Central Dirty Extract	0	6	Negative	None	n/a	60	100	n/a	None	A	80	Automatic Controls	Floor 0m
4-S7-010	Restaurant	1	Eating/Drinking	28	18	Radiant Panels	Remote Sensor Adj.	Yes	Comfort Cooled Fresh Air	Central Supply and Extract	100 people at 10 l/s per person (9ach)	100 people at 10 l/s per person (9ach)	Balanced	F7	43	41	300	n/a	None	A	80	Switch	Floor 0m
4-S7-011	WC Accessible	1	Toilet	28	18	Radiant Panels	Remote Sensor Adj.	No	None	Central Dirty Extract	0	10	Negative	None	43	41	200	n/a	None	A	80	Automatic Controls	Floor 0m
4-S7-001	Corridor	1	Corridor	28	18	Radiant Panels	Remote Sensor Adj.	No	None	None	0	0	n/a	None	43	n/a	200	n/a	None	A	80	Automatic Controls	Floor 0m
4-S7-005	Corridor	1	Corridor	28	18	Adjacent Space Transfer	None	No	None	None	0	0	n/a	None	n/a	n/a	200	n/a	None	A	80	Automatic Controls	Floor 0m

Room No.	Room Name	Qty	Room Function	Temp (max)	Temp (min)	Heating Type	Heating Control	Cooling (present)	Cooling (type)	Ventilation (type)	Supply (ac/hr)	Extract (ac/hr)	Relative pressure	Min filtration	Surface temp	Water temp	Normal lux	Night lux	Local lux	Standby grade	Colour render	Control	Plane
4-S7-013	Corridor	1	Corridor	28	18	Adjacent Space Transfer	None	No	None	None	0	0	n/a	None	n/a	n/a	200	n/a	None	A	80	Automatic Controls	Floor 0m
4-S7-012	Switch Cupboard	1	Switch Cupboard	Not Controlled	Not Controlled	None	None	No	None	None	0	0	n/a	None	n/a	n/a	100	n/a	None	A	80	Automatic Controls	Floor 0m
B-S8-001	Trolley Holding Bay	1	Circulation Equipment Storage Bays	28	16	Radiant Panels	Remote Sensor Adj.	No	None	Central General Extract	0	3	Negative	None	43	n/a	200	n/a	None	A	80	Automatic Controls	Floor 0m
4-S9-001	WC Ambulant	1	Toilet	28	18	Adjacent Space Transfer Air	None	No	None	Central Dirty Extract	0	10	Negative	None	n/a	41	200	n/a	None	A	80	Automatic Controls	Floor 0m
4-S9-002A	RFFS Changing / Support	1	Changing Facilities	28	18	Radiant Panels	Remote Sensor Adj.	Yes	Comfort Cooled Fresh Air	Central Supply and Extract	10	8	Positive	F7	43	41	100	n/a	None	A	80	Automatic Controls	Floor 0m
4-S9-002B	RFFS Changing / Support	1	Changing Facilities	28	18	Radiant Panels	Remote Sensor Adj.	Yes	Comfort Cooled Fresh Air	Central Dirty Extract	0	6	Negative	F7	43	41	100	n/a	None	A	80	Automatic Controls	Floor 0m
4-S9-004A	RFFS Medical Equipment Store	1	Storage Area Equipment	28	16	Radiant Panels	Remote Sensor Adj.	No	None	Central General Extract	0	3	Negative	None	43	n/a	200	n/a	None	A	80	Automatic Controls	Floor 0m
4-S9-005	Trolley Bay Equip St	1	Trolley bay	28	18	Adjacent Space Transfer Air	None	No	None	Central General Extract	0	3	negative	None	n/a	n/a	200	n/a	None	A	80	Automatic Controls	Floor 0m
4-S9-006	Cleaner	1	DSR	28	18	Adjacent Space Transfer Air	None	No	None	Central Dirty Extract	0	6	Negative	None	n/a	60	100	n/a	None	A	80	Automatic Controls	Floor 0m
4-S9-003A	Lobby	1	Lobby	28	16	Radiant Panels	Remote Sensor Adj.	No	None	Central Supply and Extract	3	3	Balanced	F7	43	n/a	200	n/a	None	A	80	Automatic Controls	Floor 0m
4-S9-003B	Lobby	1	Lobby	Not Controlled	Not Controlled	Adjacent Space Transfer	None	No	None	None	0	0	n/a	None	n/a	n/a	200	n/a	None	A	80	Automatic Controls	Floor 0m
B-T1-001	IT Node Rooms	1	IT equipment (comms server)	25	18	None	None	Yes	Wall Mounted	Central General Extract	0	3	Negative	None	n/a	n/a	300	n/a	None	A	80	Switch	Floor 0m
B-T1-002	IT Node Rooms	1	IT equipment (comms server)	25	18	None	None	Yes	Wall Mounted	Central General Extract	0	3	Negative	None	n/a	n/a	300	n/a	None	A	80	Switch	Floor 0m
B-T1-003	IT Node Rooms	1	IT equipment (comms server)	25	18	None	None	Yes	Wall Mounted	Central General Extract	0	3	Negative	None	n/a	n/a	300	n/a	None	A	80	Switch	Floor 0m
G-T1-003	IT Node Rooms	1	IT equipment (comms server)	25	18	None	None	Yes	Wall Mounted	Central General Extract	0	3	Negative	None	n/a	n/a	300	n/a	None	A	80	Switch	Floor 0m
G-T1-004	IT Node Rooms	1	IT equipment (comms server)	25	18	None	None	Yes	Wall Mounted	Central General Extract	0	3	Negative	None	n/a	n/a	300	n/a	None	A	80	Switch	Floor 0m
G-T1-005	IT Node Rooms	1	IT equipment (comms server)	25	18	None	None	Yes	Wall Mounted	Central General Extract	0	3	Negative	None	n/a	n/a	300	n/a	None	A	80	Switch	Floor 0m
G-T1-006	IT Node Rooms	1	IT equipment (comms server)	25	18	None	None	Yes	Wall Mounted	Central General Extract	0	3	Negative	None	n/a	n/a	300	n/a	None	A	80	Switch	Floor 0m
G-T1-007	IT Node Rooms	1	IT equipment (comms server)	25	18	None	None	Yes	Wall Mounted	Central General Extract	0	3	Negative	None	n/a	n/a	300	n/a	None	A	80	Switch	Floor 0m
1-T1-001	IT Node Rooms	1	IT equipment (comms server)	25	18	None	None	Yes	Wall Mounted	Central General Extract	0	3	Negative	None	n/a	n/a	300	n/a	None	A	80	Switch	Floor 0m
1-T1-002	IT Node Rooms	1	IT equipment (comms server)	25	18	None	None	Yes	Wall Mounted	Central General Extract	0	3	Negative	None	n/a	n/a	300	n/a	None	A	80	Switch	Floor 0m
1-T1-003	IT Node Rooms	1	IT equipment (comms server)	25	18	None	None	Yes	Wall Mounted	Central General Extract	0	3	Negative	None	n/a	n/a	300	n/a	None	A	80	Switch	Floor 0m
1-T1-004	IT Node Rooms	1	IT equipment (comms server)	25	18	None	None	Yes	Wall Mounted	Central General Extract	0	3	Negative	None	n/a	n/a	300	n/a	None	A	80	Switch	Floor 0m
1-T1-005	IT Node Rooms	1	IT equipment (comms server)	25	18	None	None	Yes	Wall Mounted	Central General Extract	0	3	Negative	None	n/a	n/a	300	n/a	None	A	80	Switch	Floor 0m
2-T1-001	IT Node Rooms	1	IT equipment (comms server)	25	18	None	None	Yes	Wall Mounted	Central General Extract	0	3	Negative	None	n/a	n/a	300	n/a	None	A	80	Switch	Floor 0m
2-T1-002	IT Node Rooms	1	IT equipment (comms server)	25	18	None	None	Yes	Wall Mounted	Central General Extract	0	3	Negative	None	n/a	n/a	300	n/a	None	A	80	Switch	Floor 0m
2-T1-003	IT Node Rooms	1	IT equipment (comms server)	25	18	None	None	Yes	Wall Mounted	Central General Extract	0	3	Negative	None	n/a	n/a	300	n/a	None	A	80	Switch	Floor 0m
2-T1-004	IT Node Rooms	1	IT equipment (comms server)	25	18	None	None	Yes	Wall Mounted	Central General Extract	0	3	Negative	None	n/a	n/a	300	n/a	None	A	80	Switch	Floor 0m
2-T1-005	IT Node Rooms	1	IT equipment (comms server)	25	18	None	None	Yes	Wall Mounted	Central General Extract	0	3	Negative	None	n/a	n/a	300	n/a	None	A	80	Switch	Floor 0m
2-T1-006	IT Node Rooms	1	IT equipment (comms server)	25	18	None	None	Yes	Wall Mounted	Central General Extract	0	3	Negative	None	n/a	n/a	300	n/a	None	A	80	Switch	Floor 0m
3-T1-001	IT Node Rooms	1	IT equipment (comms server)	25	18	None	None	Yes	Wall Mounted	Central General Extract	0	2	Negative	None	n/a	n/a	300	n/a	None	A	80	Switch	Floor 0m
3-T1-002	IT Node Rooms	1	IT equipment (comms server)	25	18	None	None	Yes	Wall Mounted	Central General Extract	0	3	Negative	None	n/a	n/a	300	n/a	None	A	80	Switch	Floor 0m
3-T1-003	IT Node Rooms	1	IT equipment (comms server)	25	18	None	None	Yes	Wall Mounted	Central General Extract	0	3	Negative	None	n/a	n/a	300	n/a	None	A	80	Switch	Floor 0m
3-T1-004	IT Node Rooms	1	IT equipment (comms server)	25	18	None	None	Yes	Wall Mounted	Central General Extract	0	3	Negative	None	n/a	n/a	300	n/a	None	A	80	Switch	Floor 0m
3-T1-005	IT Node Rooms	1	IT equipment (comms server)	25	18	None	None	Yes	Wall Mounted	Central General Extract	0	3	Negative	None	n/a	n/a	300	n/a	None	A	80	Switch	Floor 0m
4-T1-001	IT Node Rooms	1	IT equipment (comms server)	25	18	None	None	Yes	Wall Mounted	Central General Extract	0	3	Negative	None	n/a	n/a	300	n/a	None	A	80	Switch	Floor 0m
4-T1-002	IT Node Rooms	1	IT equipment (comms server)	25	18	None	None	Yes	Wall Mounted	Central General Extract	0	3	Negative	None	n/a	n/a	300	n/a	None	A	80	Switch	Floor 0m
4-T1-003	IT Node Rooms	1	IT equipment (comms server)	25	18	None	None	Yes	Wall Mounted	Central General Extract	0	3	Negative	None	n/a	n/a	300	n/a	None	A	80	Switch	Floor 0m
B-V1-001	Confidential Waste	1	Storage Area Equipment	n/a	n/a	Adjacent Space Transfer	None	No	None	Central General Extract	0	3	Negative	None	n/a	n/a	200	n/a	None	A	80	Switch	Floor 0m
B-V1-002	WEEE / Furniture / Waste Goods	1	Storage Area Equipment	n/a	n/a	Radiant Panels	Remote Sensor Adj.	No	None	Central General Extract	0	3	Negative	None	43	n/a	200	n/a	None	A	80	Switch	Floor 0m
G-X1-001	EC Plant Room 1	1	Storage Area Equipment	n/a	n/a	None	None	No	None	Natural	0	0	n/a	None	n/a	n/a	200	n/a	None	A	80	Switch	Floor 0m
G-X1-002	EC Plant Room 2	1	Storage Area Equipment	n/a	n/a	None	None	No	None	Natural	0	0	n/a	None	n/a	n/a	200	n/a	None	A	80	Switch	Floor 0m
G-X1-003	HV Gen Control Room	1	Storage Area Equipment	n/a	n/a	None	None	No	None	Natural	0	0	n/a	None	n/a	n/a	200	n/a	None	A	80	Switch	Floor 0m
G-X1-004	HV Generator	1	Storage Area Equipment	n/a	n/a	None	None	No	None	Natural	0	0	n/a	None	n/a	n/a	200	n/a	None	A	80	Switch	Floor 0m
G-X1-005	HV Plant	1	Storage Area Equipment	n/a	n/a	None	None	No	None	Natural	0	0	n/a	None	n/a	n/a	200	n/a	None	A	80	Switch	Floor 0m
G-X1-006	HV Plant	1	Storage Area Equipment	n/a	n/a	None	None	No	None	Natural	0	0	n/a	None	n/a	n/a	200	n/a	None	A	80	Switch	Floor 0m
G-X1-008	Entrance Lobby	1	Entrance Lobby	28	16	Radiant Panel	Remote Sensor Adj.	No	None	None	0	0	43	None	n/a	n/a	200	n/a	None	A	80	Automatic Controls	Floor 0m
M-X1-001	Mezz Plant 1	1	Storage Area Equipment	n/a	n/a	Adjacent Space Transfer Air	None	No	None	Natural	0	0	n/a	None	n/a	n/a	200	n/a	None	A	80	Automatic Controls	Floor 0m
B-X1-010	Corridor	1	Corridor	28	18	Adjacent Space Transfer Air	None	No	None	None	0	0	n/a	None	n/a	n/a	200	n/a	None	A	80	Automatic Controls	Floor 0m
B-COR-014	Corridor	1	Corridor	28	18	Radiant Panels	Remote Sensor Adj.	No	None	Central Supply and Extract	1	1	Balanced	F7	43	n/a	200	n/a	None	A	80	Automatic Controls	Floor 0m
B-Z1-009	Stair 9	1	Stair 9	Not Controlled	Not Controlled	None	None	No	None	None	0	0	n/a	None	n/a	None	200	n/a	None	A	80	Automatic Controls	Floor 0m
G-X1-007	Corridor	1	Corridor	28	18	Radiant Panels	Remote Sensor Adj.	No	None	None	0	0	n/a	None	43	n/a	200	n/a	None	A	80	Automatic Controls	Floor 0m

Room No.	Room Name	Qty	Room Function	Temp (max)	Temp (min)	Heating Type	Heating Control	Cooling (present)	Cooling (type)	Ventilation (type)	Supply (ac/hr)	Extract (ac/hr)	Relative pressure	Min filtration	Surface temp	Water temp	Normal lux	Night lux	Local lux	Standby grade	Colour render	Control	Plane
G-X1-008	Corridor	1	Corridor	28	18	Radiant Panels	Remote Sensor Adj.	No	None	None	0	0	n/a	None	43	n/a	200	n/a	None	A	80	Automatic Controls	Floor 0m
G-Z1-012	Stair 9	1	Stair 9	Not Controlled	Not Controlled	None	None	No	None	None	0	0	n/a	None	n/a	None	200	n/a	None	A	80	Automatic Controls	Floor 0m
G-Y1-001A	Clinical Waste - Dirty	1	Dirty utility	n/a	n/a	None	None	No	None	Natural	0	0	n/a	None	n/a	n/a	200	n/a	None	A	80	Automatic Controls	Floor 0m
G-Y1-001B	Clinical Waste - Dirty	1	Dirty utility	n/a	n/a	None	None	No	None	Natural	0	0	n/a	None	n/a	n/a	200	n/a	None	A	80	Automatic Controls	Floor 0m
G-Y1-001C	Clinical Waste - Dirty	1	Dirty utility	n/a	n/a	None	None	No	None	Natural	0	0	n/a	None	n/a	n/a	200	n/a	None	A	80	Automatic Controls	Floor 0m
G-Y1-002	General Waste	1	Storage Area Equipment	n/a	n/a	None	None	No	None	Natural	0	0	n/a	None	n/a	n/a	200	n/a	None	A	80	Automatic Controls	Floor 0m
G-Y1-003	Gas Manifold	1	Storage Area Equipment	40	10	Electric Heater	Remote Sensor Adj.	No	None	Natural	0	0	n/a	None	43	n/a	200	n/a	None	A	80	Automatic Controls	Floor 0m
G-Y1-004	Kitchen Waste	1	Storage Area Equipment	n/a	n/a	None	None	No	None	Natural	0	0	n/a	None	n/a	n/a	200	n/a	None	A	80	Automatic Controls	Floor 0m
G-Y1-005	Clinical Waste - Clean	1	Storage Area Equipment	n/a	n/a	None	None	No	None	Natural	0	0	n/a	None	n/a	n/a	200	n/a	None	A	80	Automatic Controls	Floor 0m
G-Y1-006	Wash Area	1	Storage Area Equipment	n/a	n/a	None	None	No	None	Natural	0	0	n/a	None	n/a	n/a	200	n/a	None	A	80	Automatic Controls	Floor 0m
G-Y1-008	Bottle Store	1	Bottle Store	40	10	Electric Heater	Remote Sensor Adj.	No	None	Natural	0	0	n/a	None	n/a	n/a	200	n/a	None	A	80	Automatic Controls	Floor 0m
4-Plant 006	Plantroom 006	1	4-Plant 006	32	8	Ceiling Casette DX	Remote Sensor Adj.	Yes	Ceiling Casette DX	Natural	0	0	n/a	None	43	n/a	100	n/a	None	A	80	Switch	Floor 0m
G-Y1-007	Circulation	1	Circulation	n/a	n/a	None	None	No	None	Natural	0	0	n/a	None	n/a	n/a	200	n/a	None	A	80	Automatic Controls	Floor 0m
B-COR-001	Corridor	1	Corridor	28	18	Adjacent Space Transfer	None	No	None	None	0	0	n/a	None	43	n/a	200	n/a	None	A	80	Automatic Controls	Floor 0m
B-COR-002	Corridor	1	Corridor	28	18	Radiant Panel	Remote Sensor Adj.	No	None	None	0	0	n/a	None	43	n/a	200	n/a	None	A	80	Automatic Controls	Floor 0m
B-COR-003	Corridor	1	Corridor	28	18	Radiant Panel	Remote Sensor Adj.	No	None	None	0	0	n/a	None	43	n/a	200	n/a	None	A	80	Automatic Controls	Floor 0m
B-COR-004	Corridor	1	Corridor	28	18	Radiant Panel	Remote Sensor Adj.	No	None	None	0	0	n/a	None	43	n/a	200	n/a	None	A	80	Automatic Controls	Floor 0m
B-COR-005	Corridor	1	Corridor	28	18	Radiant Panel	Remote Sensor Adj.	No	None	None	0	0	n/a	None	43	n/a	200	n/a	None	A	80	Automatic Controls	Floor 0m
B-COR-006	Corridor	1	Corridor	28	18	Radiant Panel	Remote Sensor Adj.	No	None	None	0	0	n/a	None	43	n/a	200	n/a	None	A	80	Automatic Controls	Floor 0m
B-COR-007	Corridor	1	Corridor	28	18	Radiant Panel	Remote Sensor Adj.	No	None	None	0	0	n/a	None	43	n/a	200	n/a	None	A	80	Automatic Controls	Floor 0m
B-COR-008	Corridor	1	Corridor	28	18	Radiant Panel	Remote Sensor Adj.	No	None	None	0	0	n/a	None	43	n/a	200	n/a	None	A	80	Automatic Controls	Floor 0m
B-COR-009	Corridor	1	Corridor	28	18	Radiant Panel	Remote Sensor Adj.	No	None	None	0	0	n/a	None	43	n/a	200	n/a	None	A	80	Automatic Controls	Floor 0m
B-COR-010	Corridor	1	Corridor	28	18	Radiant Panel	Remote Sensor Adj.	No	None	None	0	0	n/a	None	43	n/a	200	n/a	None	A	80	Automatic Controls	Floor 0m
B-COR-011	Corridor	1	Corridor	28	18	Adjacent Space Transfer	None	No	None	None	0	0	n/a	None	n/a	n/a	200	n/a	None	A	80	Automatic Controls	Floor 0m
B-COR-012	Corridor	1	Corridor	28	18	Radiant Panel	Remote Sensor Adj.	No	None	None	0	0	n/a	None	43	n/a	200	n/a	None	A	80	Automatic Controls	Floor 0m
B-COR-013	Corridor	1	Corridor	28	18	Radiant Panel	Remote Sensor Adj.	No	None	Central Supply	4	0	positive	F7	43	n/a	200	n/a	None	A	80	Automatic Controls	Floor 0m
B-COR-014	Corridor	1	Corridor	28	18	Radiant Panel	Remote Sensor Adj.	No	None	Central Supply and Extract	4	4	Balanced	F7	43	n/a	200	n/a	None	A	80	Automatic Controls	Floor 0m
B-Z1-002	Stair 02	1	Stair 02	28	18	Radiant Panel	Remote Sensor Adj.	No	None	None	0	0	n/a	None	43	n/a	200	n/a	None	A	80	Automatic Controls	Floor 0m
G-COR-001	Atrium	1	Atrium	28	18	Underfloor	BMS Adjustable Sensor	Yes	Comfort Cooled Fresh Air	Central Supply and Extract	4	4	Balanced	F7	43	n/a	200	n/a	None	A	80	Automatic Controls	Floor 0m
G-COR-002	Corridor	1	Corridor	28	18	Radiant Panels	Remote Sensor Adj.	No	None	None	0	0	n/a	None	43	n/a	200	n/a	None	A	80	Automatic Controls	Floor 0m
G-COR-003	Corridor	1	Corridor	28	18	Radiant Panels	Remote Sensor Adj.	No	None	None	0	0	n/a	None	43	n/a	200	n/a	None	A	80	Automatic Controls	Floor 0m
G-COR-005	Corridor	1	Corridor	28	18	Adjacent Space Transfer	None	No	None	None	0	0	n/a	None	n/a	n/a	200	n/a	None	A	80	Automatic Controls	Floor 0m
G-COR-006	Corridor	1	Corridor	28	18	Adjacent Space Transfer	None	No	None	None	0	0	n/a	None	n/a	n/a	200	n/a	None	A	80	Automatic Controls	Floor 0m
G-COR-007	Corridor	1	Corridor	28	18	Radiant Panels	Remote Sensor Adj.	No	None	None	0	0	n/a	None	43	n/a	200	n/a	None	A	80	Automatic Controls	Floor 0m
G-COR-008	Corridor	1	Corridor	28	18	Radiant Panels	Remote Sensor Adj.	No	None	None	0	0	n/a	None	43	n/a	200	n/a	None	A	80	Automatic Controls	Floor 0m
G-COR-009	Corridor	1	Corridor	28	18	Radiant Panels	Remote Sensor Adj.	No	None	None	0	0	n/a	None	43	n/a	200	n/a	None	A	80	Automatic Controls	Floor 0m
G-COR-010	Corridor	1	Corridor	28	18	Adjacent Space Transfer	None	No	None	None	0	0	n/a	None	n/a	n/a	200	n/a	None	A	80	Automatic Controls	Floor 0m
G-COR-011	Corridor	1	Corridor	28	18	Radiant Panels	Remote Sensor Adj.	No	None	None	0	0	n/a	None	43	n/a	200	n/a	None	A	80	Automatic Controls	Floor 0m
G-COR-012	Corridor	1	Corridor	28	18	Adjacent Space Transfer	None	No	None	None	0	0	n/a	None	n/a	n/a	200	n/a	None	A	80	Automatic Controls	Floor 0m
G-COR-013	Corridor	1	Corridor	28	18	Adjacent Space Transfer	None	No	None	None	0	0	n/a	None	n/a	n/a	200	n/a	None	A	80	Automatic Controls	Floor 0m
G-COR-016	Corridor	1	Corridor	28	18	Radiant Panels	Remote Sensor Adj.	No	None	None	0	0	n/a	None	43	n/a	200	n/a	None	A	80	Automatic Controls	Floor 0m
1-COR-002	Corridor	1	Corridor	28	18	Radiant Panels	Remote Sensor Adj.	No	None	None	0	0	n/a	None	43	n/a	200	n/a	None	A	80	Automatic Controls	Floor 0m
1-COR-002A	Corridor	1	Corridor	28	18	Adjacent Space Transfer	None	No	None	None	0	0	n/a	None	n/a	n/a	200	n/a	None	A	80	Automatic Controls	Floor 0m
1-COR-002B	Corridor	1	Corridor	28	18	Adjacent Space Transfer	None	No	None	None	0	0	n/a	None	n/a	n/a	200	n/a	None	A	80	Automatic Controls	Floor 0m
1-COR-003	Corridor	1	Corridor	28	18	Adjacent Space Transfer	None	No	None	None	0	0	n/a	None	n/a	n/a	200	n/a	None	A	80	Automatic Controls	Floor 0m
1-COR-004	Corridor	1	Corridor	28	18	Radiant Panels	Remote Sensor Adj.	No	None	None	0	0	n/a	None	43	n/a	200	n/a	None	A	80	Automatic Controls	Floor 0m
1-COR-005	Corridor	1	Corridor	28	18	Adjacent Space Transfer	None	No	None	None	0	0	n/a	None	n/a	n/a	200	n/a	None	A	80	Automatic Controls	Floor 0m
1-COR-006	Corridor	1	Corridor	28	18	Adjacent Space Transfer	None	No	None	None	0	0	n/a	None	n/a	n/a	200	n/a	None	A	80	Automatic Controls	Floor 0m
1-COR-007	Corridor	1	Corridor	28	18	Radiant Panels	Remote Sensor Adj.	No	None	None	0	0	n/a	None	43	n/a	200	n/a	None	A	80	Automatic Controls	Floor 0m
1-COR-008	Corridor	1	Corridor	28	18	Adjacent Space Transfer	None	No	None	None	0	0	n/a	None	n/a	n/a	200	n/a	None	A	80	Automatic Controls	Floor 0m
1-COR-009	Corridor	1	Corridor	28	18	Radiant Panels	Remote Sensor Adj.	No	None	None	0	0	n/a	None	43	n/a	200	n/a	None	A	80	Automatic Controls	Floor 0m

Room No.	Room Name	Qty	Room Function	Temp (max)	Temp (min)	Heating Type	Heating Control	Cooling (present)	Cooling (type)	Ventilation (type)	Supply (ac/hr)	Extract (ac/hr)	Relative pressure	Min filtration	Surface temp	Water temp	Normal lux	Night lux	Local lux	Standby grade	Colour render	Control	Plane
1-COR-010	Corridor	1	Corridor	28	18	Radiant Panels	Remote Sensor Adj.	No	None	None	0	0	n/a	None	43	n/a	200	n/a	None	A	80	Automatic Controls	Floor 0m
1-COR-011	Corridor	1	Corridor	28	18	Radiant Panels	Remote Sensor Adj.	No	None	None	0	0	n/a	None	43	n/a	200	n/a	None	A	80	Automatic Controls	Floor 0m
1-COR-012	Corridor	1	Corridor	28	18	Radiant Panels	Remote Sensor Adj.	No	None	None	0	0	n/a	None	43	n/a	200	n/a	None	A	80	Automatic Controls	Floor 0m
1-COR-013	Lift Lobby	1	Lift Lobby	28	18	Adacent Space Transfer	None	No	None	None	0	0	n/a	None	n/a	n/a	200	n/a	None	A	80	Automatic Controls	Floor 0m
2-COR-001	Corridor	1	Corridor	28	18	Radiant Panels	Remote Sensor Adj.	No	None	None	0	0	n/a	None	43	n/a	200	n/a	None	A	80	Automatic Controls	Floor 0m
2-COR-002	Corridor	1	Corridor	28	18	Adjacent Space Transfer	None	No	None	None	0	0	n/a	None	n/a	n/a	200	n/a	None	A	80	Automatic Controls	Floor 0m
2-COR-003	Corridor	1	Corridor	28	18	Radiant Panels	Remote Sensor Adj.	No	None	None	0	0	n/a	None	43	n/a	200	n/a	None	A	80	Automatic Controls	Floor 0m
2-COR-004	Corridor	1	Corridor	28	18	Radiant Panels	Remote Sensor Adj.	No	None	None	0	0	n/a	None	43	n/a	200	n/a	None	A	80	Automatic Controls	Floor 0m
2-COR-005	Corridor	1	Corridor	28	18	Radiant Panels	Remote Sensor Adj.	No	None	None	0	0	n/a	None	43	n/a	200	n/a	None	A	80	Automatic Controls	Floor 0m
2-COR-006	Corridor	1	Corridor	28	18	Radiant Panels	Remote Sensor Adj.	No	None	None	0	0	n/a	None	43	n/a	200	n/a	None	A	80	Automatic Controls	Floor 0m
2-COR-007	Corridor	1	Corridor	28	18	Radiant Panels	Remote Sensor Adj.	No	None	None	0	0	n/a	None	43	n/a	200	n/a	None	A	80	Automatic Controls	Floor 0m
2-COR-008	Corridor	1	Corridor	28	18	Radiant Panels	Remote Sensor Adj.	No	None	None	0	0	n/a	None	43	n/a	200	n/a	None	A	80	Automatic Controls	Floor 0m
2-COR-009	Corridor	1	Corridor	28	18	Adjacent Space Transfer	None	No	None	None	0	0	n/a	None	n/a	n/a	200	n/a	None	A	80	Automatic Controls	Floor 0m
2-COR-010	Corridor	1	Corridor	28	18	Adjacent Space Transfer	None	No	None	None	0	0	n/a	None	n/a	n/a	200	n/a	None	A	80	Automatic Controls	Floor 0m
2-COR-011	Corridor	1	Corridor	28	18	Adjacent Space Transfer	None	No	None	None	0	0	n/a	None	n/a	n/a	200	n/a	None	A	80	Automatic Controls	Floor 0m
2-COR-012	Lift Lobby	1	Lift Lobby	28	18	Radiant Panels	Remote Sensor Adj.	No	None	None	0	0	n/a	None	43	n/a	200	n/a	None	A	80	Automatic Controls	Floor 0m
3-COR-001	Corridor	1	Corridor	28	18	Radiant Panels	Remote Sensor Adj.	No	None	None	0	0	n/a	None	43	n/a	200	n/a	None	A	80	Automatic Controls	Floor 0m
3-COR-002	Corridor	1	Corridor	28	18	Adjacent Space Transfer	None	No	None	None	0	0	n/a	None	n/a	n/a	200	n/a	None	A	80	Automatic Controls	Floor 0m
3-COR-003	Corridor	1	Corridor	28	18	Radiant Panels	Remote Sensor Adj.	No	None	None	0	0	n/a	None	43	n/a	200	n/a	None	A	80	Automatic Controls	Floor 0m
3-COR-003A	Corridor	1	Corridor	28	18	Adjacent Space Transfer	None	No	None	None	0	0	n/a	None	n/a	n/a	200	n/a	None	A	80	Automatic Controls	Floor 0m
3-COR-003B	Corridor	1	Corridor	28	18	Adjacent Space Transfer	None	No	None	None	0	0	n/a	None	n/a	n/a	200	n/a	None	A	80	Automatic Controls	Floor 0m
3-COR-004	Corridor	1	Corridor	28	18	Radiant Panels	Remote Sensor Adj.	No	None	None	0	0	n/a	None	43	n/a	200	n/a	None	A	80	Automatic Controls	Floor 0m
3-COR-005	Corridor	1	Corridor	28	18	Radiant Panels	Remote Sensor Adj.	No	None	None	0	0	n/a	None	43	n/a	200	n/a	None	A	80	Automatic Controls	Floor 0m
3-COR-006	Corridor	1	Corridor	28	18	Radiant Panels	Remote Sensor Adj.	No	None	None	0	0	n/a	None	43	n/a	200	n/a	None	A	80	Automatic Controls	Floor 0m
3-COR-008	Corridor	1	Corridor	28	18	Adjacent Space Transfer	None	No	None	None	0	0	n/a	None	n/a	n/a	200	n/a	None	A	80	Automatic Controls	Floor 0m
3-COR-009	Corridor	1	Corridor	28	18	Radiant Panels	Remote Sensor Adj.	No	None	Central Supply Air	2	0	Positive	F7	43	n/a	200	n/a	None	A	80	Automatic Controls	Floor 0m
3-COR-010	Corridor	1	Corridor	28	18	Adjacent Space Transfer	None	No	None	None	0	0	n/a	None	n/a	n/a	200	n/a	None	A	80	Automatic Controls	Floor 0m
3-COR-011	Corridor	1	Corridor	28	18	Radiant Panels	Remote Sensor Adj.	No	None	None	0	0	n/a	None	43	n/a	200	n/a	None	A	80	Automatic Controls	Floor 0m
3-COR-012	Corridor	1	Corridor	28	18	Radiant Panels	Remote Sensor Adj.	No	None	None	0	0	n/a	None	43	n/a	200	n/a	None	A	80	Automatic Controls	Floor 0m
3-COR-013	Corridor	1	Corridor	28	18	Adjacent Space Transfer	None	No	None	None	0	0	n/a	None	n/a	n/a	200	n/a	None	A	80	Automatic Controls	Floor 0m
3-COR-014	Corridor	1	Corridor	28	18	Radiant Panels	Remote Sensor Adj.	No	None	None	0	0	n/a	None	43	n/a	200	n/a	None	A	80	Automatic Controls	Floor 0m
3-COR-015	Lift Lobby	1	Lift Lobby	28	18	Radiant Panels	Remote Sensor Adj.	No	None	None	0	0	n/a	None	43	n/a	200	n/a	None	A	80	Automatic Controls	Floor 0m
3-COR-017	Corridor	1	Corridor	28	18	Radiant Panels	Remote Sensor Adj.	No	None	None	0	0	n/a	None	43	n/a	200	n/a	None	A	80	Automatic Controls	Floor 0m
4-COR-001	Corridor	1	Corridor	28	18	Radiant Panels	Remote Sensor Adj.	No	None	None	0	0	n/a	None	43	n/a	200	n/a	None	A	80	Automatic Controls	Floor 0m
4-COR-001A	Corridor	1	Corridor	28	18	Adjacent Space Transfer	None	No	None	None	0	0	n/a	None	n/a	n/a	200	n/a	None	A	80	Automatic Controls	Floor 0m
4-COR-001B	Corridor	1	Corridor	28	18	Adjacent Space Transfer	None	No	None	None	0	0	n/a	None	n/a	n/a	200	n/a	None	A	80	Automatic Controls	Floor 0m
4-COR-002	Corridor	1	Corridor	28	18	Radiant Panels	Remote Sensor Adj.	No	None	None	0	0	n/a	None	43	n/a	200	n/a	None	A	80	Automatic Controls	Floor 0m
4-COR-003	Corridor	1	Corridor	28	18	Radiant Panels	Remote Sensor Adj.	No	None	None	0	0	n/a	None	43	n/a	200	n/a	None	A	80	Automatic Controls	Floor 0m
4-COR-004	Corridor	1	Corridor	28	18	Radiant Panels	Remote Sensor Adj.	No	None	None	0	0	n/a	None	43	n/a	200	n/a	None	A	80	Automatic Controls	Floor 0m
4-COR-005	Corridor	1	Corridor	28	18	Radiant Panels	Remote Sensor Adj.	No	None	None	0	0	n/a	None	43	n/a	200	n/a	None	A	80	Automatic Controls	Floor 0m
4-COR-006	Corridor	1	Corridor	28	18	Radiant Panels	Remote Sensor Adj.	No	None	None	0	0	n/a	None	43	n/a	200	n/a	None	A	80	Automatic Controls	Floor 0m
4-COR-007	Corridor	1	Corridor	28	18	Radiant Panels	Remote Sensor Adj.	No	None	None	0	0	n/a	None	43	n/a	200	n/a	None	A	80	Automatic Controls	Floor 0m
4-COR-008	Corridor	1	Corridor	28	18	Radiant Panels	Remote Sensor Adj.	No	None	None	0	0	n/a	None	43	n/a	200	n/a	None	A	80	Automatic Controls	Floor 0m
4-COR-009	Corridor	1	Corridor	28	18	Radiant Panels	Remote Sensor Adj.	No	None	None	0	0	n/a	None	43	n/a	200	n/a	None	A	80	Automatic Controls	Floor 0m
4-COR-010	Corridor	1	Corridor	28	18	Radiant Panels	Remote Sensor Adj.	No	None	None	0	0	n/a	None	43	n/a	200	n/a	None	A	80	Automatic Controls	Floor 0m
B-PLANT-001	Plant Room	1	Plant Room	Not Controlled	Not Controlled	None	None	No	None	Central Supply & Extract	1	1	Balanced	F7	n/a	n/a	300	n/a	None	A	80	Automatic Controls	Floor 0m
B-PLANT-001A	Plant Room	1	Plant Room	32	Not Controlled	None	None	No	None	Natural & Dedicated Extract	17	17	Balanced	None	n/a	n/a	300	n/a	None	A	80	Automatic Controls	Floor 0m
B-PLANT-001B	Plant Room	1	Plant Room	32	Not Controlled	None	None	No	None	Natural & Dedicated Extract	21	21	Balanced	None	n/a	n/a	300	n/a	None	A	80	Automatic Controls	Floor 0m
B-PLANT-001C	Plant Room	1	Plant Room	Not Controlled	Not Controlled	None	None	No	None	None	0	0	n/a	None	n/a	n/a	300	n/a	None	A	80	Automatic Controls	Floor 0m
B-PLANT-002	Plant Room 02	1	Plant Room 02	Not Controlled	Not Controlled	None	None	No	None	Central Supply & Extract	3	3	Balanced	F7	n/a	n/a	300	n/a	None	A	80	Automatic Controls	Floor 0m

Room No.	Room Name	Qty	Room Function	Temp (max)	Temp (min)	Heating Type	Heating Control	Cooling (present)	Cooling (type)	Ventilation (type)	Supply (ac/hr)	Extract (ac/hr)	Relative pressure	Min filtration	Surface temp	Water temp	Normal lux	Night lux	Local lux	Standby grade	Colour render	Control	Plane
B-PLANT-003	Plant Room 03	1	Plant Room 03	Not Controlled	Not Controlled	None	None	No	None	Central Supply & Extract	3	3	Balanced	F7	n/a	n/a	300	n/a	None	A	80	Automatic Controls	Floor 0m
B-PLANT-004	Plant Room 04	1	Plant Room 04	Not Controlled	Not Controlled	None	None	No	None	Central Supply & Extract	5	5	Balanced	F7	n/a	n/a	300	n/a	None	A	80	Automatic Controls	Floor 0m
B-PLANT-005	Plant Room 05	1	Plant Room 05	Not Controlled	Not Controlled	None	None	No	None	Central Supply & Extract	1	1	Balanced	F7	n/a	n/a	300	n/a	None	A	80	Automatic Controls	Floor 0m
B-PLANT-007	Plant Room	1	Plant Room	Not Controlled	Not Controlled	None	None	No	None	Central Supply & Extract	1	1	Balanced	F7	n/a	n/a	300	n/a	None	A	80	Automatic Controls	Floor 0m
B-PLANT-007A	Plant Room 07A	1	Plant Room 07A	32	Not Controlled	None	None	No	None	Natural & Dedicated Extract	16	16	Balanced	None	n/a	n/a	300	n/a	None	A	80	Automatic Controls	Floor 0m
B-PLANT-007B	Plant Room 07B	1	Plant Room 07B	32	Not Controlled	None	None	No	None	Natural & Dedicated Extract	16	16	Balanced	None	n/a	n/a	300	n/a	None	A	80	Automatic Controls	Floor 0m
B-PLANT-009	Plant Room 09	1	Plant Room 09	Not Controlled	Not Controlled	None	None	No	None	Central Supply & Extract	1	1	Balanced	F7	n/a	n/a	300	n/a	None	A	80	Automatic Controls	Floor 0m
B-PLANT-012	Plant Room 12	1	Plant Room 12	Not Controlled	Not Controlled	None	None	No	None	Central Supply & Extract	3	3	Balanced	F7	n/a	n/a	300	n/a	None	A	80	Automatic Controls	Floor 0m
B-PLANT-015A	Plant Room 15A	1	Plant Room 15A	Not Controlled	Not Controlled	None	None	No	None	Central Supply & Extract	1.5	1.5	Balanced	F7	n/a	n/a	300	n/a	None	A	80	Automatic Controls	Floor 0m
B-PLANT-015B	Plant Room 15B	1	Plant Room 15B	Not Controlled	Not Controlled	None	None	No	None	Central Supply & Extract	3	3	Balanced	F7	n/a	n/a	300	n/a	None	A	80	Automatic Controls	Floor 0m
B-PLANT-016	Plant Room 16	1	Plant Room 16	Not Controlled	Not Controlled	None	None	No	None	Central Supply & Extract	0.5	0.5	Balanced	F7	n/a	n/a	300	n/a	None	A	80	Automatic Controls	Floor 0m
B-T2-001:E3	Riser Plant	1	Riser Plant	Not Controlled	Not Controlled	None	None	No	None	None	0	0	n/a	None	n/a	n/a	100	n/a	None	A	80	Automatic Controls	Floor 0m
B-T2-002:M3	Riser Plant	1	Riser Plant	Not Controlled	Not Controlled	None	None	No	None	None	0	0	n/a	None	n/a	n/a	100	n/a	None	A	80	Automatic Controls	Floor 0m
B-T2-003:V10	Riser Plant	1	Riser Plant	Not Controlled	Not Controlled	None	None	No	None	None	0	0	n/a	None	n/a	n/a	100	n/a	None	A	80	Automatic Controls	Floor 0m
B-T2-004:V3	Riser Plant	1	Riser Plant	Not Controlled	Not Controlled	None	None	No	None	None	0	0	n/a	None	n/a	n/a	100	n/a	None	A	80	Automatic Controls	Floor 0m
B-T2-005: E2	Riser Plant	1	Riser Plant	Not Controlled	Not Controlled	None	None	No	None	None	0	0	n/a	None	n/a	n/a	100	n/a	None	A	80	Automatic Controls	Floor 0m
B-T2-006: E1	Riser Plant	1	Riser Plant	Not Controlled	Not Controlled	None	None	No	None	None	0	0	n/a	None	n/a	n/a	100	n/a	None	A	80	Automatic Controls	Floor 0m
B-T2-007:KEF	Riser Access	1	Riser Access	Not Controlled	Not Controlled	None	None	No	None	None	0	0	n/a	None	n/a	n/a	100	n/a	None	A	80	Automatic Controls	Floor 0m
B-T2-011: V	Riser Plant	1	Riser Plant	Not Controlled	Not Controlled	None	None	No	None	None	0	0	n/a	None	n/a	n/a	100	n/a	None	A	80	Automatic Controls	Floor 0m
G-T2-002:V10	Riser Plant	1	Riser Plant	Not Controlled	Not Controlled	None	None	No	None	None	0	0	n/a	None	n/a	n/a	100	n/a	None	A	80	Automatic Controls	Floor 0m
G-T2-003: E3	Riser Plant	1	Riser Plant	Not Controlled	Not Controlled	None	None	No	None	None	0	0	n/a	None	n/a	n/a	100	n/a	None	A	80	Automatic Controls	Floor 0m
G-T2-003: V3	Riser Plant	1	Riser Plant	Not Controlled	Not Controlled	None	None	No	None	None	0	0	n/a	None	n/a	n/a	100	n/a	None	A	80	Automatic Controls	Floor 0m
G-T2-004: M3	Riser Plant	1	Riser Plant	Not Controlled	Not Controlled	None	None	No	None	None	0	0	n/a	None	n/a	n/a	100	n/a	None	A	80	Automatic Controls	Floor 0m
G-T2-005: V5	Riser Plant	1	Riser Plant	Not Controlled	Not Controlled	None	None	No	None	None	0	0	n/a	None	n/a	n/a	100	n/a	None	A	80	Automatic Controls	Floor 0m
G-T2-006: M2	Riser Plant	1	Riser Plant	Not Controlled	Not Controlled	None	None	No	None	None	0	0	n/a	None	n/a	n/a	100	n/a	None	A	80	Automatic Controls	Floor 0m
G-T2-007: E2	Riser Plant	1	Riser Plant	Not Controlled	Not Controlled	None	None	No	None	None	0	0	n/a	None	n/a	n/a	100	n/a	None	A	80	Automatic Controls	Floor 0m
G-T2-008: E1	Riser Plant	1	Riser Plant	Not Controlled	Not Controlled	None	None	No	None	None	0	0	n/a	None	n/a	n/a	100	n/a	None	A	80	Automatic Controls	Floor 0m
G-T2-009:KEF	Riser Plant	1	Riser Plant	Not Controlled	Not Controlled	None	None	No	None	None	0	0	n/a	None	n/a	n/a	100	n/a	None	A	80	Automatic Controls	Floor 0m
G-T2-010A:E4	Riser	1	Riser	Not Controlled	Not Controlled	None	None	No	None	None	0	0	n/a	None	n/a	n/a	100	n/a	None	A	80	Automatic Controls	Floor 0m
G-T2-010B:E4	Riser	1	Riser	Not Controlled	Not Controlled	None	None	No	None	None	0	0	n/a	None	n/a	n/a	100	n/a	None	A	80	Automatic Controls	Floor 0m
G-T2-011	Riser Plant	1	Riser Plant	Not Controlled	Not Controlled	None	None	No	None	None	0	0	n/a	None	n/a	n/a	100	n/a	None	A	80	Automatic Controls	Floor 0m
G-T2-012	Manifold	1	Manifold	Not Controlled	Not Controlled	None	None	No	None	None	0	0	n/a	None	n/a	n/a	100	n/a	None	A	80	Automatic Controls	Floor 0m
G-T2-013	Manifold	1	Manifold	Not Controlled	Not Controlled	None	None	No	None	None	0	0	n/a	None	n/a	n/a	100	n/a	None	A	80	Automatic Controls	Floor 0m
G-T2-014	Plant Room	1	Plant Room	Not Controlled	Not Controlled	None	None	No	None	None	0	0	n/a	None	n/a	n/a	100	n/a	None	A	80	Automatic Controls	Floor 0m
G-T2-015	Riser	1	Riser	Not Controlled	Not Controlled	None	None	No	None	None	0	0	n/a	None	n/a	n/a	100	n/a	None	A	80	Automatic Controls	Floor 0m
G-T2-016:V	Riser Plant	1	Riser Plant	Not Controlled	Not Controlled	None	None	No	None	None	0	0	n/a	None	n/a	n/a	100	n/a	None	A	80	Automatic Controls	Floor 0m
G-T2-017	Riser	1	Riser	Not Controlled	Not Controlled	None	None	No	None	None	0	0	n/a	None	n/a	n/a	100	n/a	None	A	80	Automatic Controls	Floor 0m
1-T2-001: V1	Riser	1	Riser	Not Controlled	Not Controlled	None	None	No	None	None	0	0	n/a	None	n/a	n/a	100	n/a	None	A	80	Automatic Controls	Floor 0m
1-T2-002: V4	Riser	1	Riser	Not Controlled	Not Controlled	None	None	No	None	None	0	0	n/a	None	n/a	n/a	100	n/a	None	A	80	Automatic Controls	Floor 0m
1-T2-003: V2	Riser	1	Riser	Not Controlled	Not Controlled	None	None	No	None	None	0	0	n/a	None	n/a	n/a	100	n/a	None	A	80	Automatic Controls	Floor 0m
1-T2-004:KEF	Riser	1	Riser	Not Controlled	Not Controlled	None	None	No	None	None	0	0	n/a	None	n/a	n/a	100	n/a	None	A	80	Automatic Controls	Floor 0m
1-T2-005: E1	Riser	1	Riser	Not Controlled	Not Controlled	None	None	No	None	None	0	0	n/a	None	n/a	n/a	100	n/a	None	A	80	Automatic Controls	Floor 0m
1-T2-006: E2	Riser Plant	1	Riser Plant	Not Controlled	Not Controlled	None	None	No	None	None	0	0	n/a	None	n/a	n/a	100	n/a	None	A	80	Automatic Controls	Floor 0m
1-T2-007: M2	Riser	1	Riser	Not Controlled	Not Controlled	None	None	No	None	None	0	0	n/a	None	n/a	n/a	100	n/a	None	A	80	Automatic Controls	Floor 0m
1-T2-008: V5	Riser	1	Riser	Not Controlled	Not Controlled	None	None	No	None	None	0	0	n/a	None	n/a	n/a	100	n/a	None	A	80	Automatic Controls	Floor 0m
1-T2-009: V10	Riser	1	Riser	Not Controlled	Not Controlled	None	None	No	None	None	0	0	n/a	None	n/a	n/a	100	n/a	None	A	80	Automatic Controls	Floor 0m
1-T2-010: E3	Riser	1	Riser	Not Controlled	Not Controlled	None	None	No	None	None	0	0	n/a	None	n/a	n/a	100	n/a	None	A	80	Automatic Controls	Floor 0m
1-T2-011: V3	Riser	1	Riser	Not Controlled	Not Controlled	None	None	No	None	None	0	0	n/a	None	n/a	n/a	100	n/a	None	A	80	Automatic Controls	Floor 0m
1-T2-012	Riser	1	Riser	Not Controlled	Not Controlled	None	None	No	None	None	0	0	n/a	None	n/a	n/a	100	n/a	None	A	80	Automatic Controls	Floor 0m
1-T2-013: V13	Riser	1	Riser	Not Controlled	Not Controlled	None	None	No	None	None	0	0	n/a	None	n/a	n/a	100	n/a	None	A	80	Automatic Controls	Floor 0m

Room No.	Room Name	Qty	Room Function	Temp (max)	Temp (min)	Heating Type	Heating Control	Cooling (present)	Cooling (type)	Ventilation (type)	Supply (ac/hr)	Extract (ac/hr)	Relative pressure	Min filtration	Surface temp	Water temp	Normal lux	Night lux	Local lux	Standby grade	Colour render	Control	Plane
1-T2-014: V6	Riser	1	Riser	Not Controlled	Not Controlled	None	None	No	None	None	0	0	n/a	None	n/a	n/a	100	n/a	None	A	80	Automatic Controls	Floor 0m
1-T2-015: E4	Riser	1	Riser	Not Controlled	Not Controlled	None	None	No	None	None	0	0	n/a	None	n/a	n/a	100	n/a	None	A	80	Automatic Controls	Floor 0m
1-T2-016: M3	Riser	1	Riser	Not Controlled	Not Controlled	None	None	No	None	None	0	0	n/a	None	n/a	n/a	100	n/a	None	A	80	Automatic Controls	Floor 0m
1-T2-017:V	Riser Plant	1	Riser Plant	Not Controlled	Not Controlled	None	None	No	None	None	0	0	n/a	None	n/a	n/a	100	n/a	None	A	80	Automatic Controls	Floor 0m
1-T2-018: QP	Riser Plant	1	Riser Plant	Not Controlled	Not Controlled	None	None	No	None	None	0	0	n/a	None	n/a	n/a	100	n/a	None	A	80	Automatic Controls	Floor 0m
1-T2-019: V12	Riser	1	Riser	Not Controlled	Not Controlled	None	None	No	None	None	0	0	n/a	None	n/a	n/a	100	n/a	None	A	80	Automatic Controls	Floor 0m
1-T2-020	Riser Plant	1	Riser Plant	Not Controlled	Not Controlled	None	None	No	None	None	0	0	n/a	None	n/a	n/a	100	n/a	None	A	80	Automatic Controls	Floor 0m
1-T2-021	Spare	1	Spare	Not Controlled	Not Controlled	None	None	No	None	None	0	0	n/a	None	n/a	n/a	100	n/a	None	A	80	Automatic Controls	Floor 0m
1-T2-022: V1	Riser	1	Riser	Not Controlled	Not Controlled	None	None	No	None	None	0	0	n/a	None	n/a	n/a	100	n/a	None	A	80	Automatic Controls	Floor 0m
2-PLANT-001	Theatre Plant Room	1	Theatre Plant Room	Not Controlled	Not Controlled	None	None	No	None	None	0	0	n/a	None	n/a	n/a	300	n/a	None	A	80	Automatic Controls	Floor 0m
2-PLANT-001A	Theatre Plant Room A	1	Theatre Plant Room A	Not Controlled	Not Controlled	None	None	No	None	Natural	0	0	n/a	None	n/a	n/a	300	n/a	None	A	80	Automatic Controls	Floor 0m
2-PLANT-001B	Theatre Plant Room B	1	Theatre Plant Room B	Not Controlled	Not Controlled	None	None	No	None	Natural	0	0	n/a	None	n/a	n/a	300	n/a	None	A	80	Automatic Controls	Floor 0m
2-PLANT-001C	Theatre Plant Room C	1	Theatre Plant Room C	Not Controlled	Not Controlled	None	None	No	None	Natural	0	0	n/a	None	n/a	n/a	300	n/a	None	A	80	Automatic Controls	Floor 0m
2-T2-001:V1	Riser	1	Riser	Not Controlled	Not Controlled	None	None	No	None	None	0	0	n/a	None	n/a	n/a	100	n/a	None	A	80	Automatic Controls	Floor 0m
2-T2-002:V4	Riser	1	Riser	Not Controlled	Not Controlled	None	None	No	None	None	0	0	n/a	None	n/a	n/a	100	n/a	None	A	80	Automatic Controls	Floor 0m
2-T2-003:V2	Riser	1	Riser	Not Controlled	Not Controlled	None	None	No	None	None	0	0	n/a	None	n/a	n/a	100	n/a	None	A	80	Automatic Controls	Floor 0m
2-T2-004:KEF	Riser	1	Riser	Not Controlled	Not Controlled	None	None	No	None	None	0	0	n/a	None	n/a	n/a	100	n/a	None	A	80	Automatic Controls	Floor 0m
2-T2-005:E1	Riser	1	Riser	Not Controlled	Not Controlled	None	None	No	None	None	0	0	n/a	None	n/a	n/a	100	n/a	None	A	80	Automatic Controls	Floor 0m
2-T2-006:E2	Riser	1	Riser	Not Controlled	Not Controlled	None	None	No	None	None	0	0	n/a	None	n/a	n/a	100	n/a	None	A	80	Automatic Controls	Floor 0m
2-T2-007:M2	Riser	1	Riser	Not Controlled	Not Controlled	None	None	No	None	None	0	0	n/a	None	n/a	n/a	100	n/a	None	A	80	Automatic Controls	Floor 0m
2-T2-008:V5	Riser	1	Riser	Not Controlled	Not Controlled	None	None	No	None	None	0	0	n/a	None	n/a	n/a	100	n/a	None	A	80	Automatic Controls	Floor 0m
2-T2-009:V10	Riser	1	Riser	Not Controlled	Not Controlled	None	None	No	None	None	0	0	n/a	None	n/a	n/a	100	n/a	None	A	80	Automatic Controls	Floor 0m
2-T2-010:E3	Riser	1	Riser	Not Controlled	Not Controlled	None	None	No	None	None	0	0	n/a	None	n/a	n/a	100	n/a	None	A	80	Automatic Controls	Floor 0m
2-T2-011:V3	Riser	1	Riser	Not Controlled	Not Controlled	None	None	No	None	None	0	0	n/a	None	n/a	n/a	100	n/a	None	A	80	Automatic Controls	Floor 0m
2-T2-012	Riser	1	Riser	Not Controlled	Not Controlled	None	None	No	None	None	0	0	n/a	None	n/a	n/a	100	n/a	None	A	80	Automatic Controls	Floor 0m
2-T2-013:V13	Riser	1	Riser	Not Controlled	Not Controlled	None	None	No	None	None	0	0	n/a	None	n/a	n/a	100	n/a	None	A	80	Automatic Controls	Floor 0m
2-T2-014:M3	Riser	1	Riser	Not Controlled	Not Controlled	None	None	No	None	None	0	0	n/a	None	n/a	n/a	100	n/a	None	A	80	Automatic Controls	Floor 0m
2-T2-015:V6	Riser	1	Riser	Not Controlled	Not Controlled	None	None	No	None	None	0	0	n/a	None	n/a	n/a	100	n/a	None	A	80	Automatic Controls	Floor 0m
2-T2-016:E4	Riser	1	Riser	Not Controlled	Not Controlled	None	None	No	None	None	0	0	n/a	None	n/a	n/a	100	n/a	None	A	80	Automatic Controls	Floor 0m
2-T2-017:V12	Riser	1	Riser	Not Controlled	Not Controlled	None	None	No	None	None	0	0	n/a	None	n/a	n/a	100	n/a	None	A	80	Automatic Controls	Floor 0m
2-T2-018:QP	Riser	1	Riser	Not Controlled	Not Controlled	None	None	No	None	None	0	0	n/a	None	n/a	n/a	100	n/a	None	A	80	Automatic Controls	Floor 0m
2-T2-019	Riser Plant	1	Riser Plant	Not Controlled	Not Controlled	None	None	No	None	None	0	0	n/a	None	n/a	n/a	100	n/a	None	A	80	Automatic Controls	Floor 0m
2-T2-020	Riser	1	Riser	Not Controlled	Not Controlled	None	None	No	None	None	0	0	n/a	None	n/a	n/a	100	n/a	None	A	80	Automatic Controls	Floor 0m
2-T2-021	Spare	1	Spare	Not Controlled	Not Controlled	None	None	No	None	None	0	0	n/a	None	n/a	n/a	100	n/a	None	A	80	Automatic Controls	Floor 0m
2-T2-022	Riser	1	Riser	Not Controlled	Not Controlled	None	None	No	None	None	0	0	n/a	None	n/a	n/a	100	n/a	None	A	80	Automatic Controls	Floor 0m
3-T2-001:V1	Riser	1	Riser	Not Controlled	Not Controlled	None	None	No	None	None	0	0	n/a	None	n/a	n/a	100	n/a	None	A	80	Automatic Controls	Floor 0m
3-T2-002:V4	Riser	1	Riser	Not Controlled	Not Controlled	None	None	No	None	None	0	0	n/a	None	n/a	n/a	100	n/a	None	A	80	Automatic Controls	Floor 0m
3-T2-003:V2	Riser	1	Riser	Not Controlled	Not Controlled	None	None	No	None	None	0	0	n/a	None	n/a	n/a	100	n/a	None	A	80	Automatic Controls	Floor 0m
3-T2-004:KEF	Riser	1	Riser	Not Controlled	Not Controlled	None	None	No	None	None	0	0	n/a	None	n/a	n/a	100	n/a	None	A	80	Automatic Controls	Floor 0m
3-T2-005:E1	Riser	1	Riser	Not Controlled	Not Controlled	None	None	No	None	None	0	0	n/a	None	n/a	n/a	100	n/a	None	A	80	Automatic Controls	Floor 0m
3-T2-006:E2	Riser	1	Riser	Not Controlled	Not Controlled	None	None	No	None	None	0	0	n/a	None	n/a	n/a	100	n/a	None	A	80	Automatic Controls	Floor 0m
3-T2-007:M2	Riser	1	Riser	Not Controlled	Not Controlled	None	None	No	None	None	0	0	n/a	None	n/a	n/a	100	n/a	None	A	80	Automatic Controls	Floor 0m
3-T2-008:M3	Riser	1	Riser	Not Controlled	Not Controlled	None	None	No	None	None	0	0	n/a	None	n/a	n/a	100	n/a	None	A	80	Automatic Controls	Floor 0m
3-T2-009:V10	Riser	1	Riser	Not Controlled	Not Controlled	None	None	No	None	None	0	0	n/a	None	n/a	n/a	100	n/a	None	A	80	Automatic Controls	Floor 0m
3-T2-010:E3	Riser	1	Riser	Not Controlled	Not Controlled	None	None	No	None	None	0	0	n/a	None	n/a	n/a	100	n/a	None	A	80	Automatic Controls	Floor 0m
3-T2-011:V3	Riser	1	Riser	Not Controlled	Not Controlled	None	None	No	None	None	0	0	n/a	None	n/a	n/a	100	n/a	None	A	80	Automatic Controls	Floor 0m
3-T2-012	Riser	1	Riser	Not Controlled	Not Controlled	None	None	No	None	None	0	0	n/a	None	n/a	n/a	100	n/a	None	A	80	Automatic Controls	Floor 0m
3-T2-013:V13	Riser	1	Riser	Not Controlled	Not Controlled	None	None	No	None	None	0	0	n/a	None	n/a	n/a	100	n/a	None	A	80	Automatic Controls	Floor 0m
3-T2-014:E4	Riser	1	Riser	Not Controlled	Not Controlled	None	None	No	None	None	0	0	n/a	None	n/a	n/a	100	n/a	None	A	80	Automatic Controls	Floor 0m
3-T2-015:V12	Riser	1	Riser	Not Controlled	Not Controlled	None	None	No	None	None	0	0	n/a	None	n/a	n/a	100	n/a	None	A	80	Automatic Controls	Floor 0m

Room No.	Room Name	Qty	Room Function	Temp (max)	Temp (min)	Heating Type	Heating Control	Cooling (present)	Cooling (type)	Ventilation (type)	Supply (ac/hr)	Extract (ac/hr)	Relative pressure	Min filtration	Surface temp	Water temp	Normal lux	Night lux	Local lux	Standby grade	Colour render	Control	Plane
3-T2-017:V1	Riser	1	Riser	Not Controlled	Not Controlled	None	None	No	None	None	0	0	n/a	None	n/a	n/a	100	n/a	None	A	80	Automatic Controls	Floor 0m
3-T2-018:QP	Riser Plant	1	Riser Plant	Not Controlled	Not Controlled	None	None	No	None	None	0	0	n/a	None	n/a	n/a	100	n/a	None	A	80	Automatic Controls	Floor 0m
3-T2-019	Riser Plant	1	Riser Plant	Not Controlled	Not Controlled	None	None	No	None	None	0	0	n/a	None	n/a	n/a	100	n/a	None	A	80	Automatic Controls	Floor 0m
3-T2-020	Riser	1	Riser	Not Controlled	Not Controlled	None	None	No	None	None	0	0	n/a	None	n/a	n/a	100	n/a	None	A	80	Automatic Controls	Floor 0m
4-T2-001:V1	Riser	1	Riser	Not Controlled	Not Controlled	None	None	No	None	None	0	0	n/a	None	n/a	n/a	100	n/a	None	A	80	Automatic Controls	Floor 0m
4-T2-002:V4	Riser	1	Riser	Not Controlled	Not Controlled	None	None	No	None	None	0	0	n/a	None	n/a	n/a	100	n/a	None	A	80	Automatic Controls	Floor 0m
4-T2-003:V2	Riser	1	Riser	Not Controlled	Not Controlled	None	None	No	None	None	0	0	n/a	None	n/a	n/a	100	n/a	None	A	80	Automatic Controls	Floor 0m
4-T2-004:KEF	Riser	1	Riser	Not Controlled	Not Controlled	None	None	No	None	None	0	0	n/a	None	n/a	n/a	100	n/a	None	A	80	Automatic Controls	Floor 0m
4-T2-005:E1	Riser	1	Riser	Not Controlled	Not Controlled	None	None	No	None	None	0	0	n/a	None	n/a	n/a	100	n/a	None	A	80	Automatic Controls	Floor 0m
4-T2-006:E2	Riser	1	Riser	Not Controlled	Not Controlled	None	None	No	None	None	0	0	n/a	None	n/a	n/a	100	n/a	None	A	80	Automatic Controls	Floor 0m
4-T2-007:M2	Riser	1	Riser	Not Controlled	Not Controlled	None	None	No	None	None	0	0	n/a	None	n/a	n/a	100	n/a	None	A	80	Automatic Controls	Floor 0m
4-T2-008	Riser	1	Riser	Not Controlled	Not Controlled	None	None	No	None	None	0	0	n/a	None	n/a	n/a	100	n/a	None	A	80	Automatic Controls	Floor 0m
4-T2-009:V10	Riser	1	Riser	Not Controlled	Not Controlled	None	None	No	None	None	0	0	n/a	None	n/a	n/a	100	n/a	None	A	80	Automatic Controls	Floor 0m
4-T2-010:E3	Riser	1	Riser	Not Controlled	Not Controlled	None	None	No	None	None	0	0	n/a	None	n/a	n/a	100	n/a	None	A	80	Automatic Controls	Floor 0m
4-T2-011:M3	Riser	1	Riser	Not Controlled	Not Controlled	None	None	No	None	None	0	0	n/a	None	n/a	n/a	100	n/a	None	A	80	Automatic Controls	Floor 0m
4-T2-017	Riser	1	Riser	Not Controlled	Not Controlled	None	None	No	None	None	0	0	n/a	None	n/a	n/a	100	n/a	None	A	80	Automatic Controls	Floor 0m
4-T2-018:QP	Riser Plant	1	Riser Plant	Not Controlled	Not Controlled	None	None	No	None	None	0	0	n/a	None	n/a	n/a	100	n/a	None	A	80	Automatic Controls	Floor 0m
4-T2-019	Gas Store	1	Gas Store	40	10	Electric Heater	None	No	None	Natural	0	0	n/a	None	43	n/a	100	n/a	None	A	80	Switch	Floor 0m
4-PLANT-001	Plant Room 01	1	Plant Room 01	Not Controlled	Not Controlled	None	None	No	None	Natural	0	0	n/a	None	n/a	n/a	300	n/a	None	A	80	Switch	Floor 0m
4-PLANT-002	Plant Room 02	1	Plant Room 02	Not Controlled	Not Controlled	None	None	No	None	Natural	0	0	n/a	None	n/a	n/a	300	n/a	None	A	80	Switch	Floor 0m
4-PLANT-004	Plant Room 04	1	Plant Room 04	Not Controlled	Not Controlled	None	None	No	None	Natural	0	0	n/a	None	n/a	n/a	300	n/a	None	A	80	Switch	Floor 0m
4-PLANT-005	Plant Room 05	1	Plant Room 05	Not Controlled	Not Controlled	None	None	No	None	Natural	0	0	n/a	None	n/a	n/a	300	n/a	None	A	80	Switch	Floor 0m
4-PLANT-006	Plant Room 06	1	Plant Room 06	Not Controlled	Not Controlled	None	None	No	None	Natural	0	0	n/a	None	n/a	n/a	300	n/a	None	A	80	Switch	Floor 0m

IHS LOTHIAN LTD

Disputed Works Schedule Appendix 1 Item 4 (Formally Project Co Change 050)

Date – 28/08/2018	**Reference IHSL - 050**

Title - Neutropenic Patients Ventilation

1.0 Detail of Change

Financial Close Position

At Financial Close, Project Co proposed the following design and construction solution for single bed rooms within the Haematology and Oncology Department (C1.4)

Room Type & Department	FM Room Code	Pressure (Pascals) Differential to Corridor	Air Change / Hour
Single Bed Rooms Haematology and Oncology	3-C1.4-059	0 (balanced)	4
	3-C1.4-057	0 (balanced)	4
	3-C1.4-055	0 (balanced)	4
	3-C1.4-046	0 (balanced)	4
	3-C1.4-032	0 (balanced)	4
	3-C1.4-018	0 (balanced)	4
	3-C1.4-016	0 (balanced)	4
	3-C1.4-013	0 (balanced)	4
	3-C1.4-010	0 (balanced)	4

Furthermore, the following single rooms were added as part of Board Change Notice (RHSC DCN 032 & 035) for the expansion of the Haematology and Oncology Department following the removal of the Biochemistry Department (U1).

Single Bed Rooms	3-C1.4-074	0 (balanced)	4
	3-C1.4-076	0 (balanced)	4
	3-C1.4-078	0 (balanced)	4

Proposed Project Co Change

Project Co are not proposing to alter the design. However, the Boards view is that the design is non-compliant with Schedule Part 6, Sub Section C, Clause 2.1 (Approach to Design) and Clause 8 (Mechanical & Electrical Engineering Requirements) of and Sub Section D, C1.4 Haematology & Oncology Inpatients & Day Care Clinical Output Based Specification and SHTM 03-01 (Ventilation for healthcare premises Part A – Design and validation) Table A1 (Appendix 1: Recommended air change rates).

In summary, the Haematology and Oncology Department treat a range of medical issues which can be dealt with in a number of situations. The Financial close design proposes this solution as a mix of single bedrooms and full isolation suites. The Board would have preferred all single rooms in haematology and Oncology to have been suitable for neutropenic patients.

2.0 Reasons

Project Co's Financial Close design assigned balanced pressure to the neutropenic single bedrooms. The conclusion of design workshops held throughout the Construction Phase confirmed that, a balanced pressure regime will be managed operationally and is acceptable on the basis that 5 isolation suites are provided in accordance with SHTM 03-01.

3.0 Implications

Project Co require relief from the following:

- Section 2.1 (Approach to Design) of Sub-Section C (General Requirements) of Section 3 (Boards Construction Requirements) of Schedule Part 6(Construction Matters), which states:

Project Co shall take cognisance of all the architectural and building services implications of the requirements described in the Board's Construction Requirements in this Schedule Part 6 Section 3 Sub-Section D (Specific Clinical Requirements) and Sub-Section E (Specific Non-Clinical Requirements).

- Section 8 (Mechanical & Electrical Engineering Requirements) of Sub-Section C (General Requirements) of Section 3 (Board's Construction Requirements) of Schedule Part 6 (Construction Matters), which states:

Project Co shall take cognisance of all the building services implications of the requirements described in Section D (Specific Clinical Requirements) and Sub-Section E (Specific Non-Clinical Requirements) of Sub-section C of the Board's Construction Requirements.

- Section 1.1.1 (Scope of the Service) of C1.4 (Haematology & Oncology Inpatients & Day Care Clinical Output Based Specification) of SubSection D (Specific Clinical Requirements), which states:

The paediatric Haematology and Oncology Unit, (Inpatient and Day Care services), is to provide a 24 /7 service for the care of all patients with cancer or blood dyscrasia (a pathologic condition in which any of the constituents of the blood are abnormal in structure, function, or quality, as in leukaemia or haemophilia). Patients and families will attend for assessment, investigations, treatment, ongoing care planning, and palliative and end of life care.

The type of services provided include:

- *Chemotherapy*
- *High dose therapy with autologous bone marrow or peripheral*
- *blood stem cell transplant*
- *Psycho-social support and counselling for patients and families.*
- *Management of children with febrile neutropenia*
- *Management of any complications relating to cytotoxic therapy*
- *including chemotherapy and radiotherapy*
- *Administration of immunotherapy*
- *Blood transfusion*
- *Immunoglobulin infusion*
- *Management of chicken pox (primary infection and*
- *contact)/shingles in haem/onc patients*
- *Management of haemophilia patients*
- *Management of patients with sickle cell disease/crisis.*
- *Palliative care*

- Table A1 (Appendix 1: Recommended air-change rates) of Scottish Health Technical Memorandum (SHTM) 03-01, Ventilation for healthcare premises Part A – Design and validation, as follows:

Application	Ventilation	ac/Hour	Pressure (Pascals)	Supply Filter	Noise (NR)	Temp (°C)	Comments For further information see Section 6
General ward	S / N	6	-	G4	30	18-28	
Communal ward toilet	E	10	-ve	-	40	-	
Single room	S / E / N	6	0 or –ve	G4	30	18-28	
Single room WC	E	3	-ve	-	40	-	
Clean utility	S	6	+ve	G4	40	18-28	
Dirty utility	E	6	-ve	-	40	-	
Ward Isolation room	-	-	-	-	-	-	See SHPN 4; Supplement 1
Infectious disease Iso room	E	10	-5	G4	30	18-28	Extract filtration may be required
Neutropenic patient ward	S	10	+10	H12	30	18-28	

Due to the current design, the Board is required to prepare specific standard operating procedure for management of infection and patients not using the isolation rooms within this department.

4.0 Attachments
N/A

From: Sansbury, Jackie
Sent: 04 January 2019 10:08
To: 'David Wilson'
Cc: Darren Pike; Currie, Brian; Henderson, Ronnie
Subject: Theatre validastion

Dear all please see the requirements from Dr Inverarity the head virologist for NHS Lothian regarding theatre verification.

We insist that the requirements of SHTM 03-01 be met in that Infection Control required a formal validation summary report (and not a collection of documents with uninterpreted particle count and pressure).
The non-negotiable expectation from SHTM 03-01.

Ventilation system commissioning/validation report

8.64 Following commissioning and/or validation a full report detailing the findings should be produced. The system will only be acceptable to the client if at the time of validation it is considered fit for purpose and will only require routine maintenance in order to remain so for its projected life.
8.65 The report shall conclude with a clear statement as to whether the ventilation system achieved or did not achieve the required standard. A copy of the report should be lodged with the following groups:

the user department;

infection control (where required);

estates and facilities.

and UCV validation report

8.173 A validation a full report detailing the findings should be produced. The report shall conclude with a clear statement as to whether the UCV theatre suite achieved or did not achieve the standard set out above.
8.174 A copy of the report should be lodged with the following groups: *SHTM 03-01: Part A – Design and Validation*
Version 2: February 2014 Page 138 of 184 Health Facilities Scotland, a division of NHS National Services Scotland.

operating department;

infection control;

estates and facilities.

David, when do you think these will be available? Can we discuss it?

Jackie Sansbury
Head of Commissioning
RHSC & DCN - Little France
NHS Lothian

RHSC & DCN Site Office
Little France Crescent
Edinburgh EH16 4TJ

[redacted]

- We have received from Multiplex a detailed programme of the works that they will be doing in the commissioning period and have made an assessment of the likely impact on the commissioning activities. Due to the duration of works and distribution of the affected rooms in the void detection works in particular we have had to re-visit with HFS the planned programme for equipping the hospital. On the assumption that the works will proceed as planned and Multiplex will release affected rooms back to us on their intended dates, it is likely that the setting up of areas will start 4 weeks before the migration of services commence

- Jackie Sansbury has now retired and we wish her well in her well deserved retirement. As noted in last month's update, her post has not been replaced but key aspects of her remit have been redistributed through the existing team and some are detailed on the table below.

Area	**Lead**
Overall migration programme	Janice Mackenzie
Command Centre Co-ordination	Janice
Joint Commissioning meetings with MPX	Janice/Sharon Rankin/Ronnie Henderson
Clinical moves	Dorothy Hanley
Equipment	Ashley Hull /Patrick Macaulay
Commissioning budget	Janice
Familiarisation and Induction – management of the programme to ensure all staff fully inducted prior to the move	Callum Gordon

- Over Christmas and New Year period we were able to support visits from @ 50 staff which seemed very well received. It is unlikely that from February many more visits will be possible before the actual familiarisation programme commences.
- The Project Team are continuing to focus on checking if observations made during the room review process have been actioned and are finding that whilst a significant number have been there are still items to be remedied and the team are also finding new issues which are being highlighted to Multiplex.
- Many of the ATD installations are nearing completion e.g. CAMHS bedrooms, the Pod, Interview rooms and a lot of the specialist furniture has arrived.
- Work is progressing on the development of Operational Policies needed because of the new building e.g Major Haemorrhage, Patient Flow and Bed Capacity and Isolation Rooms. Finalisation of these documents is now urgent as they will form part of the familiarisation programme for staff. Some services have already updated existing policies e.g Theatres, but all areas have been tasked with looking at existing policies and amending as appropriate.

Area	item	Issue
General	Systems do not appear to have been commissioned well	Various issues identified below
General	Swirl diffusers have been widely used in the development.	Not normally used in critical areas like theatres as they can be difficult to measure accurately with balometers and they can impact on wound site velocity
Preparation	Some areas are not completed and ready for handover. Eg ceiling tiles still missing	
Theatres	Very limited extract in theatre corridors. Corridors are not at 0 absolute pressure and do not meet required 7 ach/hr (SHTM03-01 part A appndix 2 Table A2)	No escape for surplus air. Could impact on open door protection. Pressure in corridors is pushing fire doors open
Theatres	Issues with doors, door actuators, closers and interlocking to DU's	
Theatres	Some prep rooms do not meet reaquired air supply volumes. (theatres 35, 31, 32, 33 and 38)	Should be 100l/s for SPS room.
Theatres	Most theatres do not properly control temperature	There are a number of faulty control valves on plant/heater batteries
Theatres	Concers about open door protection (eg theatre 34)	Theatre supply 1171, LLE365, scrub 73. Leaves 733 for open door vs required 750.
Theatres	UCV clean zone not marked in flooring - not tape but alternative coloured zone or lines in flooring.	Para 7.108 of SHTM 03-01 part A and Para 6.26of HBN 26 which states 'In theatres with ultra-clean ventilation the floor area enclosed by the hood should be marked with lines or a contrasting coloured area of flooring'.
Theatres	Some fabric issues in theatres (eg holes to fill and under benching gaps to fill)	
Theatres	Theatre 33 - 4 cells fail 0.2 test at 0.17m/s. Filter screen may have been adapted	Re-commission UCV - may need HEPA filters as pressure drop is 170pa vs typical 100/110 for clean filters
Theatres	It is understood that extract grilles in DU are supplied one from each theatre.	Systems will need to be interlocked so both theatres are running when any one is in use.
Theatres	Dirty utility extract rates do not meet requirements in some theatres. Should be 410l/s.	Theatres 30, 36, 37, 33, 38.
Theatres	issues on some theatre light stems, covers missing, not well fitted and cabling exposed	
Theatres	Individual grilles in conventional theatres not balanced which can impact on air flows at patient wound site.	BSRIA Guide AG 3/89.3 Table 1 page 10 requires them to be within 10% of lowest grille reading.
Theatres	Noise slightly high in UCV theatres	measurements 3.5 dbA above requirements. We would expect new facilities to meet the SHTM stsndard.
Theatres	UCV hepa filter pressure drops relatively high (140-170 pa) compared with expected 100/110 pa for new filters	
Theatres	Hepa filter screens on UCV are distorted in places	
Isolation rooms	Several isolation rooms on one AHU. HBN 04-01 supplement 1 (2013) Para 2.37 states that ideally each isolation suite should have its own supply and extract system.	Para 2.37 of HBN 04-01 states that ideally each isolation suite should have its own dedicated supply and extract system
Isolation rooms	Some isolation rooms not achieving the required 10 ach/hr	Min running at 5 ach and some just under 10
Isolation rooms	Back up arrangements appear to be very complex and as such likely to be challenging in future	
HDU's	Only achieving 3-4 ach/hr vs required 10	NHS have apparently agreed this??
AHU's	Filter pleat orientation incorrect on top row of final filters	Should be vertical
AHU's	Pre filters showing signs of bypass	
AHU's	Magnahelic gauges not marked for clean and dirty limits	
AHU's	Insufficient access for cleaning (eg inlets) and access hatches are too small for cleaning/maintenance	
AHU's	Some duct traverse test points are not plugged	
AHU's	Surplus drip tray in AHU (?humidifier removed?). Tray drain is not blanked off	
AHU's	Cooling coil drip tray area not easy to clean. Cooling coil baffles cannot be easily removed due to cable installation	
AHU's	Trap arrangements incorrect. No suitable air gaps and traps dirty and incorrectly installed	
AHU's	Magnahelic gauge scale too wide	1-500pa wheras 1-250 reflects likely filter pressure drops
AHU's	Motorised dampers take a long time to open and close which impacts on the speed of auto-changeover	No spring return fitted so may not close in the event of power failure.
AHU's	Plant labelling incorrect and shows incorrect areas served.	Temporary labelling installed
AHU's	Branch ducts not generally marked up to show areas served	
AHU's	Auto change over arrangements need to be fully tested. Some MD's do not close on plant isolation and some units will not re-start after both motors have been isolated.	
AHU's	Some motors running at over 95% speed so there is limites scope for system to overcome dirty filter pressure drop and maintain system performance	
BMS	Communication problems beteen BMS and AHU (eg theatre 33)	
BMS	It is not clear if critical plant will operate in stand alone mode in the event of issues with BMS or comms	

AUHs	cableing inside AHU also cable connectors inside AHU, potentail for electrical faults to cause as ource of fire within the airstraem. Potentail for smoke/fume to enter clinical areas	Similar situation was found at an NHS hopspital in the NorthEast 2016 all wiring had to be removed from AHUs before handover to Trust

Area	Item	Issue	MPX Comments 27 June 2019
General	Systems do not appear to have been commissioned well	Various issues identified below	Systems were commissioned in accordance with CIBSE / BSRIA and SHTM guidelines
General	Swirl diffusers have been widely used in the development.	Not normally used in critical areas like theatres as they can be difficult to measure accurately with balometers and they can impact on wound site velocity	Splitter used in balometer to ensure accurate readings -Grille selected are intended to provide minimal jetting at operating table height.
Preparation	Some areas are not completed and ready for handover. Eg ceiling tiles still missing		All ceiling tiles were previoulsy installed (exception of NHSL turnkey rooms)
Theatres	Very limited extract in theatre corridors. Corridors are not at 0 absolute pressure and do not meet required 7 ach/hr (SHTM03-01 part A appndix 2 Table A2)	No escape for surplus air. Could impact on open door protection. Pressure in corridors is pushing fire doors open	Pressure cascade is designed to flow from theatres through ancilary rooms out to corridor (reference point / pressure)Corridors designed to be positive pressure to the adjacent departments and circulation areas and are in excess of 7ac/h out flow. Noting that the dirty Utility extract draws air from the corridor contributing to the air change rate. Currently reviewing corridors doors.
Theatres	Issues with doors, door actuators, closers and interlocking to DU's		All previously working - please advise which doors?
Theatres	Some prep rooms do not meet reaquired air supply volumes. (theatres 35, 31, 32, 33 and 38)	Should be 100l/s for SPS room.	100l/s is based on a rooms size, where rooms are slightly smaller, flowrates calculated accordingly. Flow rate calculated on basis of acheving 10ac/h - THE 32 and 33 100l/s all others 90l/s
Theatres	Most theatres do not properly control temperature	There are a number of faulty control valves on plant/heater batteries	Further information required detailing fault and which theatres? Some faulty actuators already identified and works ongoing to rectify.
Theatres	Concerns about open door protection (eg theatre 34)	Theatre supply 1171, LLE365, scrub 73. Leaves 733 for open door vs required 750.	Open door protection design was completed in conjunction with the pressure stabilser specialist. Recorded flowrates noted (particularly theatre supply)looks lower than design and previously commissioned?
Theatres	UCV clean zone not marked in flooring - not tape but alternative coloured zone or lines in flooring.	Para 7.108 of SHTM 03-01 part A and Para 6.26of HBN 26 which states 'In theatres with ultra-clean ventilation the floor area enclosed by the hood should be marked with lines or a contrasting coloured area of flooring'.	Investigating best way to mark floor.
Theatres	Some fabric issues in theatres (eg holes to fill and under benching gaps to fill)		Area previously reviewed with NHSL - Please advise any specific areas
Theatres	Theatre 33 - 4 cells fail 0.2 test at 0.17m/s. Filter screen may have been adapted	Re-commission UCV - may need HEPA filters as pressure drop is 170pa vs typical 100/110 for clean filters	System passed during commissioning. To be reviewed.
Theatres	It is understood that extract grilles in DU are supplied one from each theatre.	Systems will need to be interlocked so both theatres are running when any one is in use.	As per original design
Theatres	Dirty utility extract rates do not meet requirements in some theatres. Should be 410l/s.	Theatres 30, 36, 37, 33, 38.	410l/s is based on a rooms size, where rooms are slightly smaller, flowrates calculated accordingly. Flowrates calculated base on achieving > 20ac/h and pressure cascade
Theatres	issues on some theatre light stems, covers missing, not well fitted and cabling exposed		All covers previously fitted (Turnkey contractor) - please advise specific areas.
Theatres	Individual grilles in conventional theatres not balanced which can impact on air flows at patient wound site.	BSRIA Guide AG 3/89.3 Table 1 page 10 requires them to be within 10% of lowest grille reading.	Open areas can be within 20% (BSRIA BG49/2014 supercedes AG3/89)
Theatres	Noise slightly high in UCV theatres	measurements 3.5 dbA above requirements. We would expect new facilities to meet the SHTM standard.	Previously measured and within limits (UCV commissioning reports). Please provide specific Theatres
Theatres	UCV hepa filter pressure drops relatively high (140-170 pa) compared with expected 100/110 pa for new filters		MAT Comments required
Theatres	Hepa filter screens on UCV are distorted in places		MAT Comments required
Theatres	UCV hepa filter pressure drops relatively high (140-170 pa) compared with expected 100/110 pa for new filters		MAT Comments required
Theatres	Hepa filter screens on UCV are distorted in places		MAT Comments required
Isolation Rooms	Several isolation rooms on one AHU. HBN 04-01 supplement 1 (2013) Para 2.37 states that ideally each isolation suite should have its own supply and extract system.	Para 2.37 of HBN 04-01 states that ideally each isolation suite should have its own dedicated supply and extract system	Design as per original refernce design and also in SA
Isolation Rooms	Some isolation rooms not achieving the required 10 ach/hr	Min running at 5 ach and some just under 10	Provide calculations and specific rooms?- Rooms were checked early June and were achieving ac rates
Isolation Rooms	Back up arrangements appear to be very complex and as such likely to be challenging in future		As per Isolation room functionality report.
HDU's	Only achieving 3-4 ach/hr vs required 10	NHS have apparently agreed this??	Please advise specific room?
AHU's	Filter pleat orientation incorrect on top row of final filters	Should be vertical	MER to comment
AHU's	Pre filters showing signs of bypass		Please advise which units?
AHU's	Magnahelic gauges not marked for clean and dirty limits		MER to comment
AHU's	Insufficient access for cleaning (eg inlets) and access hatches are too small for cleaning/maintenance		Ducts and AHUs have been successful cleaned on two previous occasions?
AHU's	Some duct traverse test points are not plugged		All test holes were previously plugged. Can be re-plugged
AHU's	Surplus drip tray in AHU (?humidifier removed?). Tray drain is not blanked off		MER to comment
AHU's	Cooling coil drip tray area not easy to clean. Cooling coil baffles cannot be easily removed due to cable installation		MER to comment
AHU's	Trap arrangements incorrect. No suitable air gaps and traps dirty and incorrectly installed		MER to comment
AHU's	Magnahelic gauge scale too wide	1-500pa wheras 1-250 reflects likely filter pressure drops	Gauges give a clear indication of pressure. The BMS all gives the required information as well.
AHU's	Motorised dampers take a long time to open and close which impacts on the speed of autochangeover	No spring return fitted so may not close in the event of power failure.	MER to comment
AHU's	Plant labelling incorrect and shows incorrect areas served.	Temporary labelling installed	Only incorrect item on permanent label was Theatre number (original number) - temp labels added, new labels awaited
AHU's	Branch ducts not generally marked up to show areas served		Labels awaited
AHU's	Auto change over arrangements need to be fully tested. Some MD's do not close on plant isolation and some units will not re-start after both motors have been isolated.		Previously tested and operational - please identify relevant AHUs
AHU's	Some motors running at over 95% speed so there is limites scope for system to overcome dirty filter pressure drop and maintain system performance		Still enough capacity to overcome dirty filters.
BMS	Communication problems beteen BMS and AHU (eg theatre 33)		fault to be reviewed
BMS	It is not clear if critical plant will operate in stand alone mode in the event of issues with BMS or comms		Units can be switched to hand should there be a catastrophic failure of BMS
AHU	cableing inside AHU also cable connectors inside AHU, potentail for electrical faults to cause as ource of fire within the airstraem. Potentail for smoke/fume to enter clinical areas	Similar situation was found at an NHS hopspital in the NorthEast 2016 all wiring had to be removed from AHUs before handover to Trust	MER to comment

From: Darren Pike [redacted]
Sent: 04 July 2019 09:44
To: Matthew Templeton
Cc: Wallace Weir
Subject: RE: RHSC: Single Bed rooms

Matt

Reading that through it would apply to all single bed rooms. I'm checking the SHTMs for specifics around HDU/Critical care.

Be interested if you/pinsents read it the same way.

Darren Pike
Project Director

MULTIPLEX

Multiplex Construction Europe Ltd
RHSC & DCN Project Office
Little France Crescent,
Edinburgh,
EH16 4TJ, United Kingdom
[redacted]
W www.multiplex.global

From: Matthew Templeton [redacted]
Sent: 03 July 2019 18:48
To: Darren Pike
Cc: Wallace Weir
Subject: RHSC: Single Bed rooms

Darren,

With regards to the Critical Care single bedrooms and air change rates, to what extent is that affected by Item 13 in the Dispute Works Schedule of the Settlement Agreement? This debated whether single rooms (ref to Table A1 of Appendix 1) should be 6 ac/hr V's 4/ac/hr; however it was decided upon 4 with an increased extract through the en-suite.

When this Item 13 'Single Bedroom Ventilation Air Changes' was discussed and agreed, was the intention it also covered critical care single beds or are these covered under a different part of the SHTM and hence not covered under the SA?

Regards
Matt

Matt Templeton | Director
Dalmore Capital
Caledonian Exchange, 19A Canning Street, Edinburgh, EH3 8EG
[redacted]

[redacted]
www.dalmorecapital.com

DALMORE CAPITAL

Please note from Monday 17th June, we are moving the Edinburgh office to 2nd Floor, Caledonian Exchange, 19A Canning Street, Edinburgh, EH3 8EG. All telephone numbers will remain the same. We look forward to welcoming you to our new office.

Registered No: 06849002. Authorised and Regulated by the Financial Conduct Authority.
For addressee only. No legally binding commitments will be created by this e-mail message. Where we intend to create legally binding commitments these will be made through hard copy correspondence or documents.
If you are not the intended recipient it may be unlawful for you to read, copy, distribute, disclose or otherwise use the information in this e-mail. If you are not the intended recipient please contact us immediately.
E-mail may be susceptible to data corruption, interception and unauthorised amendment, and we do not accept liability for any such corruption, interception or amendment or the consequences thereof.

Disclaimer

The information contained in this communication from the sender is confidential. It is intended solely for use by the recipient and others authorized to receive it. If you are not the recipient, you are hereby notified that any disclosure, copying, distribution or taking action in relation of the contents of this information is strictly prohibited and may be unlawful.

This email has been scanned for viruses and malware, and may have been automatically archived by **Mimecast Ltd**, an innovator in Software as a Service (SaaS) for business. Providing a **safer** and **more useful** place for your human generated data. Specializing in; Security, archiving and compliance. To find out more Click Here.

Please consider the environment before printing this e-mail.

This email and any attachments may contain confidential/legally privileged information, which is not waived. The contents are for the intended recipient/s only. Any unauthorised use is expressly prohibited. If you have received this in error please reply to notify the sender of its incorrect delivery, and then delete both it and your reply. Multiplex has no liability of any nature for any loss arising from this email or any attachments.

Malcolm Thomas

Consulting Engineer

[redacted]

Mr. Ian Storrar
Head of Engineering
Health Facilities Scotland
NHS Nation Services Scotland
3rd floor Meridian Court
5 Cadogan Street
Glasgow
G2 6QE

27 July 2019

Dear Ian,

Children's Hospital, Edinburgh
Site Visit 25 July 2019

I visited site on 25 July to gain an appreciation of the ventilation system as installed. The Hospital is new and yet to be taken into use.

General

Overall first impressions were that the ventilation plant installation overall was average but that there were many minor air leaks, faults and niggles. Most of these will be straightforward to rectify but what was alarming was that even though the Hospital opening had been delayed they still remained to be resolved. The report from IOM highlighted similar issues and it was evident that the system when offered for validation was not ready.

I was concerned to read about the length and configuration of flexible ductwork above the ceilings. The HTM is quite clear that flexible ductwork should be as straight and short as possible, not exceed 1m in length and never be used in lieu of a bend.

Air Handling Units

A major non compliance arises with the ability to change the supply and extract fans in the major Air Handling Units (AHU). They are buried within the AHU with no obvious way to access or remove them. HTM03-03 requires that all elements of an AHU be accessible for maintenance and that over the life of the unit they may need to be removed or replaced. This will not be possible without major disruption with the units as installed. Given the large areas that the individual AHU's serve, changing fans will take a significant amount of time and render the section of the hospital that they serve unavailable.

It was also noted that there is a large amount of loose wiring and plug connectors inside the units and the IOM report also highlighted this issue.

Helicopter Landing Pad

I am unhappy with the location of the helicopter landing pad. There are open courtyards below and various air supply intakes and extract discharges in the vicinity. The downdraft from the helicopter when using the pad will have an adverse effect on the performance of these systems and may result in reverse air flows into the hospital.

I note that there is a ground level helicopter pad adjacent to the neighboring building and within easy reach of the children's hospital and wonder why this facility is not considered adequate. I understand the desire to have a short transfer route for a patient arriving by helicopter but there are also the needs of all the patients in the hospital to consider.

Operating Theatres

UCV Theatres

The "Clean zone" under the Ultra Clean Ventilation terminal is only delineated by a thin line on the floor. Good practice in a new installation such as this is to delineate the entire floor zone in a contracting colour to that of the surrounding floor area. In that way it is immediately obvious when personnel or instrument trolleys stray or get nudged out of the zone. From the comments in the IOM report the line is a late addition so the contractor evidently did not intend to meet the HTM requirement when the flooring was originally laid.

Conventional Theatres - Preparation room

Noted that all the preparation rooms are designed as "Sterile Pack Store" (SPS) rooms. This is normal for Ultra Clean Ventilated (UCV) theatres where good practice recommends that lay up of instruments takes place under the UCV terminal. In Conventional Operating suites instrument packs are normally opened and prepared in "Lay up" preparation room as this cuts down the time between cases. The Preparation room in the conventional theatre in this development is a SPS Prep. It is important that staff using the facility are made aware of this.

Scrub areas

The scrub rooms are effectively an open corridor off the operating room so their volume does not need to be included in the total volume of the operating room. The scrub areas do however need a good air flow from the operating room, down the length of the scrub and out at the far end. The existing ceiling level extract terminal is only designed to extract 100L/s which given that the approximate average volume of the scrub is $33m^3$ only gives 11 air changes per hour to this area. I recommend providing an additional low level extract terminal in the corner adjacent to the far end of the scrub trough. This terminal to extract 100L/s which together with the existing ceiling terminal will result in approximately 20 air changes per hour from the scrub area. Corner duct to be formed with plaster board and fitted with a pull off face extract terminal for ease of cleaning.

Anaesthetic rooms

Supply and extract in Anaesthetic rooms should provide a clean air flow path for the staff to reduce the possibility of them being casually exposed to leaking and /or exhaled Anaesthetic agents. Most rooms are satisfactory but Anaesthetic rooms 31 and 34 need the ceiling supply terminal moving to the opposite side of the room and in Anaesthetic room 30 the ceiling supply terminal is too close to the door and should be relocated towards the middle or further end of the room. (See attached information)

Shared Utility rooms

The extract for the utility rooms is shared between two air handling units. If one AHU is shut down or put into "set back" then there will not be sufficient air extract in the utility. Rather than installing complicated constant volume boxes it would be simpler to fit a small auxiliary extract fan that is controlled by room pressure.

Recovery areas

Satisfactory as these are ventilated with high level supply down the center of the room and low level extract at the head end of the beds.

Isolation rooms

There is an obvious problem of resilience and routine maintenance as up to five isolation rooms are fed from a single AHU which, to make matters worse also serves the critical care unit and some general areas. All the eggs are in one basket! There is an emergency bypass that will allow the load to be taken by another AHU during routine maintenance or breakdown but the operation of this has yet to be proved.

I understand that there is an intention to split the load in two, an approach that I endorse. I have left information about cabinet AHU's with Ian Brodie of Mott Macdonald as these may offer a simpler solution to splitting the load than just adding a single conventional AHU.

Conclusions

Taken overall the design and provision of ventilation in this development has I consider made insufficient allowance for the routine operation and maintenance of the systems. As a consequence resilience is very poor. Breakdowns and unforeseen stoppages will result in significant portions of the hospital without active ventilation. It should be remembered that ventilation is provide in critical areas such as theatres, isolation rooms and critical care in order to reduce the possibility of infection by the airborne route.

The ventilation installation itself is below the standard that would be expected with many outstanding issues that are yet to be resolved. I recommend a full snagging inspection of each systems from its supply intake right through to the discharge position. This should be followed by "cause and effect" testing to prove the control and indication functions.

The fire dampers also need to have their operation proved. Note that in many locations inspection access panels have not been installed so the action of the fire dampers cannot be directly observed. This needs to be rectified.

It is evident that much remains to be done before the hospital can accept patients.

[redacted]
Consulting Engineer
Lead Author HTM 03-01 – Specialised Ventilation for Healthcare Premises

AUTHORISING ENGINEER (VENTILATION)

REPORT

FOR

NON-CRITICAL VENTILATION SYSTEMS

AT THE

Royal Hospital for Children and Young People, Edinburgh

9 August 2019

Introduction

1. I was asked by Health Facilities Scotland (HFS) to prepare a report on the non-critical Ventilation systems at the new Royal Hospital for Children & Young People, Edinburgh (RHCYP) on 18 Jul 19. The requirement was to produce an initial Red/Amber/Green feedback for specific questions on this situation by 5 Aug, and a more full report by 26 Aug 19. Both of these time frames were subsequently shortened by HFS to 1 & 12 Aug respectively.

2. I agreed to visit the site over the period 1 – 2 Aug 19. I was sent copies of various papers and reports, including the draft Validation Summary from IOM and two schedules of ventilation plant (one for each plant room) dated 25 May 16. I was able to start assembling the data for site wide Air Handling Unit (AHU) Register before arriving on site. This data was later updated with help from Bouygues, and a full list is attached. I concluded that there are a total of 18 non-critical AHUs at the RHCYP.

3. I gave a verbal de-brief on my findings to Ian Storrar on Thu 1 Aug and then submitted an initial Red/Amber/Green (RAG) report by e-mail in the early morning of Fri 2 Aug. This RAG report was later updated that same day in one area following further discussions and on-site visits.

Executive Summary

4. There are a number of design and installation errors in the non-critical ventilation systems which do not generally impede the occupation of the RHCYP Hospital non-critical areas by staff, patients or the general public.

5. However, it is strongly recommended that the issues identified in this report are corrected in a reasonable time frame.

6. Clinicians should be made aware of the physical limits of the suitability of non-critical area use due to the limited ventilation systems provided. The clinicians should include the provision of suitable ventilation in all decisions regarding the temporary and longer term placement of patients, staff and general public.

Investigation Findings

7. Design Information. The final tender for the design for the new RHSC was dated December 2013. It was subsequently updated and incorporated an unknown series of comments and it was republished in August 2014. NHS Lothian assembled an on-site team to liaise with the main contractors. They held a short series of meetings in the summer months of 2016 concerning the Ventilation discipline.

8. It is unclear when and by whom the derogation of ventilation requirements laid down in SHTM 03-01, Appendix 1, Table A1: “Recommended air-change rates.” was agreed. Of particular relevance to this report is that the requirement for General Wards was reportedly reduced from 6 air changes/hour to 4 air changes/hour. The latter figure was used as the design standard for these areas by the organisation carrying out the re-validation tests carried out by IOM.

9. The lack of clarity regarding this derogation process is a major concern. HFS is strongly advised to develop a system for formally agreeing derogations from the standards required by the relevant SHTM or other ruling document. A written proposal by any agency should be screened by an independent Chartered Engineer who has relevant experience in the field of Engineering in question (possibly the Board Authorising Engineer for that discipline). The screening Engineer should then produce a written report to support or deny the request for derogation. This report should be retained by all parties concerned.

10. In addition, the clinicians should be made aware of any ventilation derogations as this factor should be included in their Risk Assessments for positioning vulnerable patients.

11. Commissioning Information. The re-validation of the systems was being undertaken by IOM at the time of my visit. This work included measurements taken from over 2,000 ventilation grilles and the subsequent calculations of the air changes/hour achieved.

12. Initial findings reportedly indicate that some areas failed to achieve the derogated design requirements. The output of the AHUs supplying these areas will probably need to be enhanced to meet these minimum requirements. It is considered preferable to exceed them to approach the standards originally required in SHTM 03-01.

13. I was told that there are no Local Exhaust Ventilation units to be considered for this site. The on-site fume cupboards are subject to an independent inspection and maintenance regime and were not examined.

14. Equipment. I examined several AHUs in both plant rooms and noted that there are some common deficiencies in their design and installation against the requirements of SHTM 03-01.

15. I did not check the operation of the AHUs as this task is included in the current work being undertaken by IOM. It is understood that the detailed control of the ventilation systems is exercised by the BMS system. This was not examined during my site visit.

16. AHU Airtightness. SHTM 03-01, Part A, para 4.13 requires AHUs to have a high degree of air-tightness. The AHU penetrations by water pipes for heating and cooling batteries were often poorly made and left unsealed. AHU 04-03 and 04-07 were noted to be performing poorly against this requirement. All pipe penetrations of AHU surfaces should be checked and leakages sealed.

17. AHU Electrical services. SHTM 03-01, Part A, para 4.17 requires that services are not installed in positions that will reduce or impede access. The AHU major components have been fabricated off-site and installed on-site. The control cabling joints have been made by plug-in units which are then allowed to dangle in the airstream, causing some turbulence as well as unnecessary fatigue on the fittings themselves. These connections should be secured so that they do not impede the airstream.

18. SHTM 03-01, Part A, para 4.17 requires that services are not installed in positions that will reduce or impede access. AHU 04-05 access door is obstructed by an electrical conduit. All access doors in the AHUs should open unimpeded by other installations and fittings.

All AHU doors should be checked for full opening and corrective work instigated where necessary.

19. AHU Internal Lighting. SHTM 03-01, Part A, para 4.18 requires viewing ports to be at a convenient height. This has not been possible with the "double-deck" AHUs used on this site. Pulpit ladders have been provided in each plant room to allow easy access to the top deck of inspection windows. This is considered a reasonable way ahead.

20. SHTM 03-01, Part A, para 4.18 requires that all the lights in a unit should be operated by a single switch. This has been achieved, but these switches are sometimes positioned at about 3m above floor level – i.e., AHU 04-03. It is recommended that such switches are re-positioned to a convenient height from floor level as most inspection hatches are at the lower level.

21. Duct Changes in Section. SHTM 03-01, Part A, paras 5.35 and 5.36 define the allowable changes in duct section. It was noted that several AHU intake duct sections included severe changes in cross-section. All AHU ductwork section changes should be checked to ensure that they are within the allowable limits.

22. AHU Intake Louvres. SHTM 03-01, Part B, para 3.23 requires cleaning access to be provided by hinged louvres or by access doors behind the louvre. The current louvres are not hinged. There is a small hatch in the intake section, but this is not large enough to admit a person to inspect and clean the anti-vermin screen. It is recommended that the louvres are re-configured to include at least a door sized hinged section.

23. SHTM 03-01, Part B, para 3.23 requires the duct behind the louvre to be self-draining, or to be tanked and provided with a drainage system. None of the AHUs that I visited had this facility. This should be provided.

24. AHU Drainage. SHTM 03-01, Part B, paras 3.27 requires drain traps to be the clear (borosilicate) glass type. These were observed to be in use, but several were dirty or contained particulate matter. These traps should all be kept in a "sparkling clean" condition.

25. SHTM 03-01, Part B, para 3.30 requires that AHU drainage systems must have a discharge air gap of at least 15mm above the drainage receptor. The top surface of a grill situated above a floor drain should be taken as the lower reference for this measurement as the grill could support trash that would interrupt the waste water flow. Several air gaps were significantly less than this distance. These systems require critical examination and re-fitting.

26. SHTM 03-01, Part B, para 3.31 requires drainage pipework to have a fall of at least 1 in 60 in the direction of flow. Several drainage lengths were observed to be running parallel to the floor for significant distances. These drains should be carefully checked to ensure that the correct fall is maintained.

27. The drainage system installation for AHU 04-07 was poorly installed. In addition some supports were broken. This system should be replaced.

28. Duct Measurement Points. SHTM 03-01, Part B, para 3.62 requires all air-flow test-points to be clearly identified and size of the duct given. All the test-points found were well capped, but not labelled in any way. This situation should be corrected.

29. Some major branches to the main ducts did not appear to have air-flow test-points inserted. It is recommended that the positioning of all air-flow test-points is re-examined by an independent organisation.

30. In addition to the above, the ventilation system balance appears to be incorrect in places. This was noted particularly on Floor 1 where the corridors seem to be at a higher pressure than the surrounding rooms. This lack of compliance with the SHTM needs to be quantified and corrected. It is strongly recommended that all of the ventilation systems that have been re-balanced should now be re-commissioned.

31. Safe System of Work. I was briefed that Bouygues have started to set up a sound SSoW that utilises an in-house Permit-to-work system for intrusive works and an Authority-for-access system for non-intrusive work on ventilation systems. All plant rooms and AHUs have logbooks. This is considered sound practice.

32. Bouygues have engaged a reputable AE and plan to have at least two APs and two CPs to provide 24/7 cover. A third AP & CP will additionally be trained and appointed to provide cover for the duty personnel when they are on leave or sick. The training of the individuals has been hampered by an unusually high turnover of manpower during the initial months of this contract. Suitable individuals have now been identified to fill all of these requirements. The individuals are currently named as follows:

    a. AE: Paul Crothers.
    b. APs: David Allan, Paul Crothers (until a second AP is trained and appointed), Jonathan Reynolds (requires training and appointment), Bill Whiteman (requires training and appointment).
    c. CPs: Alan Herkes, Garry Ferguson, James Taylor (requires training and appointment).

33. A training and appointment regime should continue to be followed to ensure that adequate skilled manning levels are maintained.

34. Inspection & Maintenance. Bouygues reported that there is a site-wide system for planning downtime for the AHUs to allow for routine inspection and maintenance work. This system requires a 3-month notice period.

35. Bouygues reported that their current PPM system includes daily, weekly and monthly visual checks of the AHUs. They are planning to mark up the differential pressure gauges with green/red sectors to facilitate this process in conjunction with the current work of contractors who are calibrating the ventilation systems.

Recommendations

36. The following actions should be carried out to ensure optimum compliance of the non-critical ventilation systems with SHTM 03-01. They are not in any particular order, but have been SCART prioritised using the following agreed scale.

SCART Risk Grades	
5	Very High
4	High
3	Medium
2	Low
1	Very Low

Ser	Rating	Reference	Action Required
1	5	190809/01	A robust and accountable derogation process should be established and used.
2	5	190809/02	Clinicians should include any ventilation derogation levels when they are Risk Assessing the placement of their patients.
3	4	190809/03	All pipe penetrations of AHU surfaces should be checked and sealed to prevent air losses.
4	5	190809/04	Internal AHU control cabling joints should be removed from the airstream in a secure fashion.
5	5	190809/05	All AHU door openings should not be impeded by other service obstructions.
6	2	190809/06	All AHU lighting switches should be positioned to be easily accessible from ground level.
7	3	190809/07	Changes in duct section should be checked to ensure that they are within allowable limits.
8	5	190809/08	AHU intake louvres should be re-configured to allow easy access to the intake section of the plant ductwork.
9	5	190809/09	All AHU intake sections should be provided with drainage.
10	3	190809/10	Borosilicate drainage traps should be kept clean.
11	4	190809/11	AHU drainage pipes should discharge with the correct air-gap clearance from the receptor.
12	5	190809/12	The drainage installation for AHU 04-07 should be replaced.
13	5	190809/13	All air-flow test-points should be clearly labelled with the information required by SHTM 03-01, Part B, para 3.62.
14	4	190809/14	The provision of air-flow test-points should be analysed by an independent organisation. Additional test-points should be inserted where necessary.
15	5	190809/15	All non-critical ventilation systems that have been re-balanced should now be re-commissioned.

Conclusions

37. There are a number of design and installation omissions in the ventilation systems designated for the non-critical areas of the hospital. These are not considered to generally impede the occupation of the RHCYP Hospital non-critical areas by staff, patients or the general public.

38. However, it is strongly recommended that the issues identified above are corrected in a reasonable time frame.

39. Clinicians should be made aware of the physical limits of the suitability of area use due to the limited ventilation systems provided. The clinicians should include the provision of suitable ventilation in all decisions regarding the temporary and longer term placement of patients, staff and general public.

40. Bouygues have set up a sound inspection, maintenance and repair system to support the non-critical ventilation systems.

[redacted]

Eur Ing John M Rayner, BSc (Eng), CEng, FIHEEM, FCMI, MIMechE, MEI, MIET, MSVHSoc, TechIOSH

Authorising Engineer (Ventilation)

TURNER PROFESSIONAL ENGINEERING SERVICES (TPES)

AHU Summary

AHU Number	Zone	Level	Departments served	AHU Status
02-01	2	02	Clinical Management Suite (R1)	Non-critical
02-02	3 & 4	02	Neurophysiology (M4), DCNT Therapies (M2), Equipment library (G2)	Non-critical
02-03	3	00	Radiology / X-ray (Q1)	Mixed purpose
02-04	3	00	Radiology / Gamma Camera (Q1)	Mixed purpose
02-05			Atrium / Main entrance	Non-critical
02-06	4	00	Child & Adolescent Mental Health Services (F1)	Non-critical
02-07	3	00	Staff changing (Q1), Basement level (I2), (S1), (S3), (S4), (S6)	Non-critical
02-08	3	01	Operating theatre support & RHSC Surgical Day Case unit (P1)	Mixed purpose
02-09	3	01	Operating Theatre 1 (RHSC)	Critical
02-10	3	01	Operating Theatre 2 (RHSC) Therapies (M2), Equipment Library (G2)	Critical
02-11	3	01	Operating Theatre 3 (RHSC)	Critical
02-12	3	01	Operating Theatre 4 (RHSC)	Critical
02-13	3	01	Operating Theatre 5 (RHSC)	Critical
02-14	3	01	Operating Theatre 6 (RHSC)	Critical
02-15	3	01	Operating Theatre 1 (DCN)	Critical
02-16	3	01	Operating Theatre 2 (DCN)	Critical
02-17	3	01	Operating Theatre 3 (DCN)	Critical
02-18	3	01	Angiography Procedures	Critical
02-19	3	01	Operating Theatre 4 (DCN)	Critical
02-20	3	01	Operating theatre support & RHSC Surgical Day Case unit (P1) (Intraoperative MRI Department)	Mixed purpose
02-21	4	02	DCN Implants (L2), Programme Investigations Unit (M3), DCN Wards / Health Records Support (N2), Isolation Lobby 2-L2-038, 2-L2-134	Non-critical
02-22	3	00	Radiology / MRI scanners (Q1)	Critical
02-23	4	01	Pediatric Acute Receiving Unit (A2), Spirit & Pastoral Care (J2), Isolation Lobby G-A2-074	Non-critical
02-24	4	01	DCN Acute Care (L1), On-Call Suite (G3), Isolation Lobby 1-L1-104	Non-critical
02-25	3	00	DCN Outpatients (M1), Radiology / CT Scan (Q1)	Mixed purpose

02-26	4	00	Emergency (A1), PARV/Emergency/Radiology shared (A3)	Non-critical
02-27	3	02	Central staff changing (S5), Basement Level – Domestic (S3), Materials Management (S4), Store (S7)	Non-critical
04-01	2	00	RHSC Main Outpatients (D1), Cardiology & Respiration (D2), Family Support Services (K1), Pediatric Dentistry (D5), Social Work (D8), Pod (E1)	Non-critical
04-02	2	03	Family Hotel (K2)	Non-critical
04-03	2	04	RHSC Main Outpatients (D1), RHSC Therapies (D6), Plastics Dressing Clinic (D7), Orthoptics (D4), Audiology (D4)	Non-critical
04-04	2	04	Clinical Education Suite (H3)	Non-critical
04-05	3 & 4	04	Health Records ((R2), Child Life & Health (H1)	Non-critical
04-06	4	01	PICU HDB (B1), Bereavement Suites (J1), Clinical Research Facility (H2)	Mixed purpose
04-07	3	03	Neuroscience (C1.3), Haematology/Oncology Inpatients & Day Care (C1.4), Med/Neuro/Surg/Haemo support (C1.5), Pediatric neurophysiology (C1.7), Special Feeds Unit (C3), Shelled Space (U1)	Non-critical
04-08	3	03	Medical inpatients (C1.1), Surgical Long stay Inpatients (C1.2), Adolescent Shared Accommodation (C1.6), Surgical Short stay Inpatients (C1.8), Wards support areas (C2), Sleep Lab (C4), Medical Day-care Unit (D9)	Non-critical
04-09	2	04	Classroom (C5), Clinical/Management Suite (R1), Restaurant (S7)	Non-critical

ARCADIS Design & Consultancy for natural and built assets

Re-provision of the RHSC & DCN at Little France — IT SNAGGING NOTICE

Snag Number	Zutec ID	Location	Work Package	Sub Item	Defect	Snag Description
1	24679	4-PLANT-003 - Helipad Fire Suppression Plant				Water supply pipe not supported, not insulated or protected (trace heating) and no drain valve fitted. Foam supply pipeworknot insulated or protected (trace heating) and no drain valve fitted.
2	24672	All Rooms MPX				There is an illuminated fire escape sign within the oncology courtyard - see attached image. All other courtyards with simialr setups do not have illuminated fire escape signs - see attached examples. Where is the consistency of approach here? All courtyards should be treated the same.
3	24671					No exit signage within courtyard space - see attached image.
4	24670					Faulty LED bulkhead within courtyard - see attached image.
5	24675	4-R2-004 - RHSC/DCN Office (17 person)	FFE	Data Outlet	Misc	Floorbox 11 plate where data outlets are isn't fully secure to base unit and cable managment is missing. Photo attached.
6	24678	B-Plant-008 Rainwater Tank Room				Rainwater holding tank contaminated with debris
7	24677	B-S1-022 - Freezer	Brookfield Multiplex			Bouygues has noted that there is an alarm being generated by the freezer. There is an issue with the unit as the temperature in the freezer is warm. Requires to be checked out. Can bouygues be updated with any informaiton regarding this issue.
8	24676	B-S1-025 - Dairy Store	Brookfield Multiplex			Bouygues noted that this room was indicating a fault on the external display - Fault read DEF. Can an update be provided on this please.
9	24014	G-A2-008 - Reception/Touchdown	Ceilings	Light Fittings	Missing	Gap between fitting and ceiling - secure fitting tight to ceiling
10	24674	G-A1-010	Brookfield Multiplex			See attached photo Water service pipes to be removed and capped at branch from main lines. Drainage pipe to be cut back flush with floor. All necessary making good of flooring and walls to be carried out after.removal.
11	24673	All Rooms MPX				Please ensure all cable penetrations to the external are all suitably stopped - see attached.
12	24650		Brookfield Multiplex			Chiller Panel Common Alarm activated? Needs investigating and resolved.
13	24652	G-X1-001 - EC: Plant Room 1	Brookfield Multiplex			Energy Centre – Boiler CHP Common Alarm – This was witnessed on 31-10-2018 and has continuously been lit during this period and is still on alarm.
14	24654		Brookfield Multiplex			Energy Centre Oil Panel – Common Alarm Flashing
15	24655	G-X1-004 - HV Generator	Brookfield Multiplex			Energy Centre Louvres for Diesel Generators closed, actuators seem to be contained behind a plate – Are these easily removed? Quantity? Is this set so that if one Generator is activated then all louvres open or only one set per boiler (would like to avoid failure of actuator and potential build-up of fume within the space during a critical period.
16	24657		Brookfield Multiplex			Plantroom, Riser cleaning required to a satisfactory standard as currently a lot of settled dust debris and rubbish.
17	24658		Brookfield Multiplex			Some AHU Magnehelic gauges were showing a zero reading even though they were in operation – these need to be checked so that differential and filter condition can adequately be monitored.

18	24664					Our Fire Officer has commenced with undertaking fire risk assessments for the clinical areas on the 3rd floor within the building and has since started to identify some common themes that need addressed regarding fire doors. There is a wide selection of fire doors where the gaps is greater that specified within the BM Trada Q mark fire door certification installation manual and the door sets are marked as being installed by a certified installer to the manufacturers specifications (gold sticker). In addition, our Fire Officer is finding large numbers of doors which have faults. For example, either that gaps are too great; there are sections of cold smoke seal missing or damaged; there are sections of intumescent sealer that are loose or missing; self closers are requiring adjustment to close fully or are catching on the door; damaged doors which have been repaired but not to the standard and a few glazing issues along with the potential that some of the doors are missing intumescent pads at the hinges. Suffice to say these issues need to be addressed prior to the introduction of patients for the compartmentation requirement to allow the Phased horizontal evacuation of the hospitals fire strategy to work . Attached are a list of observations noted thus far.
19	24669	4-S9-002 - RFFS Changing/Support	Shower	Finish	Misc	Bottom of shower screen not sealed, water leaking onto floor. Water pooled in 4-S9-001 doorway may or may not be related.
20	24660		Brookfield Multiplex			The external drain covers at the entrance of the AE have been identified on 31-10-18 where there is a high risk of someone with a stick having this caught in the drain and hence may cause a HS hazard, this needs to be addressed urgently.
21	24661		Brookfield Multiplex			Lighting Levels above tanks in Water Tank Plantroom on roof appear to be low – can you please complete a LUX Level check in this area evidenced by BYES personnel.
22	24662	All Rooms MPX				There is a visible and distinct absence of safety signage throughout the Facilities. Whilst fully acknowledging the legislative requirements, we would expect some key areas to have safety signage installed where there is a significant risk to health and safety that has not been removed or controlled by other methods. This is only appropriate where use of a sign can further reduce the risk. The other methods may include engineering controls or safe systems of work and may be required under other relevant legislation. We note that Safety signs are not a substitute for those other methods of control. We also note the absence, in particular, of safety signage within gas storage areas and note the specific requirements of the BCR' 5.28 Storage of Gas Cylinders section.
23	24663	4-COR-002 - Corridor				Damage received to wall finish post removal of wall accessory - see attached images.
24	24668	B-S3-004 - Laundry (Mircofibre)				wall scratched next to washing machine
25	24667	B-S3-004 - Laundry (Mircofibre)				floor in laundry room scratched
26	24665	RHSC Entrance Canopy				New RHCYP front entrance - canopy and flat roof has discolouration / staining to single-ply roofing membrane. Also open gutter is not laid to sufficient falls to allow free draining and as such standing water is forming. See attached images for further detail.
27	20624	4-S7-004 - WC (A) (M)				Mark on door - see attached.
28	24615	G-T2-017 - Riser	Containment	Traywork / Basket	Misc	Electrical Riser Cupboards – The cores through floor need to have plate added to opening where a foot could become trapped, this is evidenced in the attached image.

29	24631					Bouygues have noted that there are some issues with the identification of plantrooms through the building - It appears that some plant rooms are incorrectly identified and room indicators are missing. This requires to be checked as it does not appear to be in accordance with the final schedule of accommodation. No directional indicators on marked fire escape routes - 2nd floor AHU plantrooms, Also there are trip hazards on main fire escape routes that are not clearly marked or identified, including bunds at entrances to plant rooms.
30	24656		Brookfield Multiplex			Lifts were discussed and all lifts will be completed and overhauled for handover to a suitable standard, however there are 2x lifts which will remain for Construction activities which will not fall within the FM Contract until these have been completed, overhauled and is expected to be once all of the Multiplex and Board Commissioning, Post Completion Works, Defects and Change items have all been completed and accepted by the IT (Arcades).
31	24651		Brookfield Multiplex			Basement – NHS Stores location there are various electrical panels which are exposed and require protection and access control (i.e. lockable enclosure for PTW access only).
32	24649		Brookfield Multiplex			CHW Pumps – there is no suitable means for removal, replacement and maintenance of the pump motors etc… within the Plantroom at Roof Level, there is a requirement for a suitable beam and lifting device in order for this to be removed and should have been implemented through design to satisfy CDM.
33	24648		Brookfield Multiplex			Potential AAV discharge on CHW Pipework - chilled water pumps 4th floor.
34	24647		Brookfield Multiplex			Pigeon Guano (droppings) have been witnessed where there requires to be action to resolve this where pigeon has been sitting on steelwork, particularly due to the recent occurrences and concerns from QEUH Glasgow.
35	24646					AHU Panel Section dented / damaged, require confirmation from supplier that this does not impact warranties etc… 2nd floor plant room
36	24645	All Rooms MPX	Brookfield Multiplex			Vinyl Flooring at various locations identified as being damaged and requires rectification. Across site.
37	24644		Brookfield Multiplex			Valves witnessed as not having adequate labelling / discs for suitable cross reference, this needs to be addressed. Across site.
38	24643		Brookfield Multiplex			Flood line panel – faulty and needs to be replaced.
39	24642		Brookfield Multiplex			Electrical LV cables and Earth cables witnessed do not have adequate labelling within plantrooms and in general labelling of electrical services is very poor and adds a high risk due to no visibility of cable distribution through physical barriers such as walls etc… all labelling should be completed to a satisfactory standard so that identification can be determined at the relevant spacing intervals.
40	24641		Brookfield Multiplex			Honeywell security panels evidenced with no labelling within Service Risers – All Panels and equipment should be adequately labelled and cross reference to GA / Schematic diagrams.
41	24640		Brookfield Multiplex			Fire Alarm Cables (Pyro) do not have adequate labelling within plantrooms and in general labelling of electrical services is very poor and adds a high risk due to no visibility of cable distribution through physical barriers such as walls etc… all labelling should be completed to a satisfactory standard so that identification can be determined at the relevant spacing intervals.
42	24639		Brookfield Multiplex			Electrical Riser Cupboards – The cores through floor need to have plate added to opening where a foot could become trapped, this is evidenced in the attached image.
43	24638					Underfloor Manifold in store room (Ground Floor) – Floor / Wall Needs to be finished and the pipes rising through the floor need adequate protection.

44	24637					Atrium – There is no MEWP on site for access to maintain or also to access light fittings etc… again, Multiplex have a responsibility to design a suitable solution so that elements can be maintained, therefore as there is no gantry or birdcage walkway then suitable means of access is required to be provided. Can you please advise when this equipment will be on site so that we can adequately have our Engineers trained for this specific piece of specialist equipment. Can we also have confirmation from Structural Engineer that the Floor is suitable for the loadings provided and a berthing study provided for the equipment indicating the point load and an spreader plates where required? You have advised that room “Atrium Clean Equipment” is where the MEWP is to be stored and that the room size is satisfactory. We would note that there is no sufficient wall or door protection provided on the room to receive such equipment and needs to be addressed. You have also advised that the equipment will be charged via 110V, therefore please provide suitable 110V Transformer and Leads.
45	24636	4-Z1-004 - Stair 04				Light diffuser has released itself from fitting - is this a defect with all fittings as this has been happening periodically throughout stairwells with the same fitting?
46	24635	4-Z1-004 - Stair 04				Imperfections in wall finish - see attached. Area is half-landing, adjacent to picture window.
47	24628	B-PLANT-001B - Plant Room 15				Bouygues have noted that there is no identification on the doors to the substations SS1A SS1B SS2A and SS2B. Substation doors require to be marked with appropriate identification for the substation. Doors through to LV to be marked up with Danger Electricity Doors through to HV to be marked up with Danger High Voltage Doors through to Substation require to be marked up with Caution Gas Suppression System - Systemshould beswitched tomanualbefore entry. Treatment of Electric shock signs to be fitted to substations High Voltage areas of substations to be signed appropriately - segregation fences should be fitted with Danger High Voltage Fire escape provision on segregation fence to be signed clearly. HV Distribution Single line drawings to be fittedonto wall in High Voltage Area
48	24627	B-PLANT-001A - Plant Room 15				Bouygues have noted that there is no identification on the doors to the substations SS1A SS1B SS2A and SS2B. Substation doors require to be marked with appropriate identification for the substation. Doors through to LV to be marked up with Danger Electricity Doors through to HV to be marked up with Danger High Voltage Doors through to Substation require to be marked up with Caution Gas Suppression System - Systemshould beswitched tomanualbefore entry. Treatment of Electric shock signs to be fitted to substations High Voltage areas of substations to be signed appropriately - segregation fences should be fitted with Danger High Voltage Fire escape provision on segregation fence to be signed clearly. HV Distribution Single line drawings to be fittedonto wall in High Voltage Area
49	24629	B-PLANT-007A - Plant Room 15a				Bouygues have noted that there is no identification on the doors to the substations SS1A SS1B SS2A and SS2B. Substation doors require to be marked with appropriate identification for the substation. Doors through to LV to be marked up with Danger Electricity Doors through to HV to be marked up with Danger High Voltage Doors through to Substation require to be marked up with Caution Gas Suppression System - Systemshould beswitched tomanualbefore entry. Treatment of Electric shock signs to be fitted to substations High Voltage areas of substations to be signed appropriately - segregation fences should be fitted with Danger High Voltage Fire escape provision on segregation fence to be signed clearly. HV Distribution Single line drawings to be fittedonto wall in High Voltage Area

50	24630	B-PLANT-007B - Plant Room 15b				Bouygues have noted that there is no identification on the doors to the substations SS1A SS1B SS2A and SS2B. Substation doors require to be marked with appropriate identification for the substation. Doors through to LV to be marked up with Danger Electricity Doors through to HV to be marked up with Danger High Voltage Doors through to Substation require to be marked up with Caution Gas Suppression System - Systemshould beswitched tomanualbefore entry. Treatment of Electric shock signs to be fitted to substations High Voltage areas of substations to be signed appropriately - segregation fences should be fitted with Danger High Voltage Fire escape provision on segregation fence to be signed clearly. HV Distribution Single line drawings to be fittedonto wall in High Voltage Area
51	24632	B-PLANT-005 - Plant Room 15				Bouygues have noted that the door to the UPS room from the corridor is not signed to identify UPS. Danger Electricity sign should be located on this door. Door should also be marked up Restricted Access.
52	24633	B-PLANT-005 - Plant Room 15				Bouygues has noted that the segregation fence/ gate between the UPS area and the segregated walkway between the tank room B-PLANT-004and corridor B-COR-003 does not have any signage fitted. This gate also requires to be locked secure and a means provided to break frominside the UPS areain the event that an escape is required.
53	24634	1-D6-018 - DSR				lights not working
54	22663	G-A2-040 - Dining / Play Room	FFE	Panel	Misc	Poor joint. Poor finish at top
55	22308	1-B1-010 - Cylinder Store	Wall	Decoration/Finish	Misc	Pipes need boxed in - check if required
56	22302	1-B1-006 - WC - Staff	Door	Door	Damaged	Pinhole needs filled inside room beneath digilock
57	23227	1-G3-008 - Mini Kitchen	Wall	Decoration/Finish	Incomplete	Wall at back of cupboard for hydrotap unit not finished
58	24558	4-PLANT-003 - Helipad Fire Suppression Plant				Zone OR-04-Core 3 does not exist on Zutec
59	24626	All Rooms MPX				Why has the Kemper KHS system not been commissioned to flush on set temperature parameters rather than purely for 5 minutes on weekdays only? Why is the flushing regime not daily, inlcuding weekends?
60	24619	B-PLANT-001A - Plant Room 15				Bouygues has noticed that the fire suppression system control panels requires detail of area covered. The suppression control panel should have information on what area the control panel controls. Likewise the repeater panels should be clear on what area is protected / covered by the repeater panel information should be beside the repeater panel.
61	24620	G-X1-002 - EC: Plant Room 2				Bouygues has noted that cabling above the CHP control panel appears not to be fully labled / tagged.
62	24621	G-X1-005 - HV Plant				Bouygues has noted that the drawing on the wall in the Generator Switchboard switchroom details the earthing layout. Should this not be a signle line drawing of the HV distribution system ? Also raised query on this earth drawing due to the representation of the generator earth configuration. Awaiting feed back on drawing if this is indeed as fitted.
63	24622	G-X1-004 - HV Generator				Bouygues has noted that the HV cables from the generator to the HV cable terminal box are secured by pastic tie wraps. This is on all three generator sets. Entry was made for this issue previously.
64	24624	G-X1-004 - HV Generator				Bouygues has noted that the segregation fence gate between the HV area in the generator hall and the gas pressurisation / tank area and fire escape door is not secured or provided with a means to secure the gate to prevent unauthorised access from the non HV area to the HV area. No fire escape signage fitted to the fence, no HV restricted area signs fitted to the fence.

65	24625	G-X1-006 - HV Plant				Bouygues has noted that the lables fitted to the bus section circuit breakers on the rear of the switchboards are handwritten in pen and not like the other lables that have been printed. Please check and confirm if this is as it should be or if these lables should be printed.
66	24617					B-S6-050 glass on vision panel in door cracked
67	24614	G-N1-008 - Switch Cupboard	Piped Services	Heating	Misc	Underfloor Manifold in store room (Ground Floor) – Floor / Wall Needs to be finished and the pipes rising through the floor need adequate protection.
68	24613	G-X1-004 - HV Generator				Bouygues have noted that there is no means provided to secure the locking bar that locks the generator terminal chamber. The locking bar can be pulled up and out.
69	24511	G-A2-055 - En-suite	Brookfield Multiplex			see pdf attached for snag locations 12. rail faulty (deanestor) - Bottom plate missing below vertical rail
70	21898	G-F1-007 - Interview 2	Door	Vision Panel	Misc	Nail holes not filled
71	24440	G-I1-007 - Catering Shop		Switches		Hole in wall beside shutter containment
72	23308	1-D1-014 - Consult/Examination	Envelope	Window	Missing	Missing screw cap. Photo
73	23427	2-N2-005 - DSR	Wall	Decoration/Finish	Damaged	See photo.
74	24487	3-T1-005 - IT Node Room	Door	Ironmongery	Lock Missing	Maglock not in place. See photo.
75	20898		Brookfield Multiplex			Leak from previous drainage penetration into HV end of substation. Please repair and recheck all other penetrations into substations
76	20522	B-PLANT-002 - Plant Room 15				Excessive heat temperature in room.
77	24612	G-Q1-016 - Screening Room (fluoroscopy)	Door	Vision Panel	Incorrect	The vista blind control is on the wroong side of the door
78	24553	4-T3-001 - Plant Room 06				AHU 04-05 extract discharge not room sealed to pentland louvre. Please detail access for cleaning.
79	24554	4-PLANT-005 - Plant Room 05				AHU 04-03 no access to clean clean louvres
80	24555	4-PLANT-005 - Plant Room 05				AHU 04-04 no access to clean louvres
81	24556	4-PLANT-004 - Plant Room 05				Numerous dead flies all over floor
82	24557	4-PLANT-004 - Plant Room 05				AHU 04-02 no access to clean louvres
83	24569	4-R1-001 - Management/Conference Room				Wall finishing poor - see atached.
84	24566	4-R1-005 - WC - Staff (M)				Indicator bolt off toilet cubicle. Missing grub screw.
85	24405	G-COR-011 - Corridor	Wall	Skirting	Missing	Missing skirting and paint patch to left of door
86	24406	G-COR-011 - Corridor	Wall	Protection	Misc	Poor join in wall protection to right of door g cor 012
87	24407	G-COR-011 - Corridor	Ceilings	Suspended Ceilings	Incomplete	
88	24408	G-COR-012 - Corridor	Door	Door Frame	Finish	Poor finish round door to hospital street
89	24398	G-COR-010 - Corridor	FFE	Outlet	Missing	Face plate missing
90	24568	4-R1-001 - Management/Conference Room				Ceiling finishing poor - see attached images.
91	24574	G-X1-005 - HV Plant	Wall	Blockwork	Misc	Bouygues has noticed that there is no sealing in the cored holes between the HV generator room and the oil tank area. Does this require to be filled in to complete the sealing and prevent weather/ rodent ingress ? Mercury to tidy cables before holes are sealed
92	24575	3-D9-030 - DSR	Sink	Fittings	Misc	Cold tap (no water flow) not working kitchen type sink
93	24576	3-Z1-003 - Stair 03	Floor Finishes	Vinyl	Damaged	Damage on floor vinyl on half landing between floors 3 and 4.
94	24577		Brookfield Multiplex			1. Section of bird spikes missing from girder (see photo) 2. No cowls on IEF, DEF EEF ductwork (see photo) 3. All pipework associated with Helipad should have bird spikes, 2 pigeons witnessed perched on pipes above container 4. All horizontal cable trays and cables to container should have bird spikes 5. Helipad fire fighting container should have bird prevention measures on top 6. Fire alarm interface cable to Helipad container not clipped to tray 7. CWS pipe to Helipad container not adequately supported
95	24578	G-Z1-012 - Stair 9	Brookfield Multiplex			Noted that the window winder mechanisim is detached from the wall on the mid landing. This requires to be reattached to the wall.
96	24606	G-Q1-015 - Changing	Door	Ironmongery	Missing	Handle required
97	24607	G-Q1-016 - Screening Room (fluoroscopy)	Door	Ironmongery	Lock Missing	
98	24608	G-Q1-017 - Preparation Room	Door	Ironmongery	Missing	Closing mechanism

99	24609	3-C4-001 - Corridor	FFE	Push Button	Missing	CAL 001 bell/ buzzer push wall mounted on drawing missing from between main corridor 3 COR 006 and Kildrummy corridor 3 C4 001B
100	24610	1-D6-034 - Corridor	FFE	Push Button	Wrong Location	Between corridor 1 D6 034 and corridor 1 D6 056 SEC 001 Proximity Fob Reader and SEC 002/ SWC99 Emergency Break Glass/ switch, exit push button are wrong way round.
101	24611	3-C1.1-071 - Corridor	FFE			SEC001 proxmity fob reader should be on either side of the door. Secure / Secure
102	24605	G-Q1-013 - Changing	Door	Ironmongery	Missing	Handle required on inside
103	24604	G-Q1-012 - General X-Ray 2	Door	Ironmongery	Adjust Lock	
104	24603	G-Q1-008 - Processing Area	Door	Ironmongery	Missing	Handle missing
105	24602	G-Q1-006 - Changing (acc)	Door	Ironmongery	Missing	Handle missing
106	24601	G-Q1-005 - Changing	Door	Door	Missing	Handle required on X-ray room side
107	24600	G-Q1-136 - CT Room	Door	Door	Misc	Door not finished
108	24599	G-Q1-135 - Control Room - CT/MRI	Door	Ironmongery	Incorrect	Remove lock and make good
109	24598	G-Q1-129 - Changing (acc)	Door	Signage	Incorrect	Incorrect sign on door
110	24597	G-Q1-128 - Changing (acc)	Door	Signage	Incorrect	Incorrect sign on door
111	24596	G-Q1-127 - Changing - WCH	Door	Door	Damaged	Holes in doors
112	24595	G-Q1-035 - Injection Room 1	Door	Ironmongery	Misc	Blind handle should be on the inside
113	24594	G-Q1-034 - Hot Waiting 1	Door	Ironmongery	Misc	Thumb lock not required
114	24591	G-Q1-028 - Preparation Room	Door	Door	Missing	Needs closing mechanism
115	24590	G-Q1-024 - Dirty Utility	Door	Ironmongery	Misc	No thumb lock required
116	24589	G-Q1-098 - Recovery Bay	Door	Ironmongery	Incorrect	Blind handle should be on the inside
117	24588	G-Q1-071 - Control Room - CT	Door	Ironmongery	Lock Missing	
118	24587	G-Q1-059 - CT Room	Door	Ironmongery	Missing	Push plate required
119	24586	G-Q1-059 - CT Room	Door	Ironmongery	Missing	Door keep missing
120	24585	G-Q1-058 - Acute Reporting	Door	Door	Missing	Closing mechanism missing
121	24584	G-Q1-047 - Hot Waiting 2	Door	Ironmongery	Incorrect spec	Please remove lock on inside
122	24583	G-Q1-046 - Stress Room (myocardial work)	Door	Vision Panel	Incorrect	Control for vista blind should be on other side
123	24582	G-Q1-046 - Stress Room (myocardial work)	Door	Door	Missing	Closing mechanism missing
124	24581	G-Q1-044 - Gamma Camera 2	Door	Door	Misc	Not closing
125	24580	G-A1-006	Door	Door	Missing	Door closure device missing
126	24579	G-A1-004	Door	Door	Missing	Missing door handle on outside
127	24070	G-I1-012 - Assisted Changing/Nappy Change	FFE	Dispenser	Damaged	Damaged See photo
128	23206	1-J1-003 - Body Viewing Room	Floor Finishes	Vinyl	Damaged	Damaged to vinyl around easy clean and also scuffs to blue vinyl near door to corridor and sink and window
129	21007	2-M2-006 - Waiting Area				2.Clock to close to TV and needs moved to the right.
130	22702	1-B1-090 - Equipment Cleaning	Wall	IPS Panels	Misc	See photo
131	24368	G-COR-008 - Corridor	Door	Door	Finish	Door threshold g-cor-008 threshold needs finished
132	24571	4-COR-007 - Corridor				Upstand to flooring poorly finished - see attached. Area is next to 4-S7-007.
133	24572	4-COR-007 - Corridor				Movement joint is not infection control compliant - regular cleaning of this floor will result in rapid deterioration of the joint and infection issues as well as fabric issues. See attached images.
134	24573		Brookfield Multiplex			1. Water on floor at rear of ventilation plant room East elevation (see photo) 2. AHU 04-09 appears to be incorrectly labelled as zone 2 (see photo)
135	24549	4-T3-002 - Plant Room 06				AHU extract discharges are not room sealed to pentland louvres. Please also detail access for cleaning
136	20920	Mezzanine	Piped Services	Heating	Access Restrict for Maint.	The access ladders top platforms require to be re-done to allow a full foot access and the bottom panel cut down to eliminate trip hazard when accessing the ladder to come down from this level.

137	20924	G-D1-021 - Child Protection Room	Wall	Decoration/Finish	Poor Finish	BG 1. Door External damage to door surround - left and right hand lower level. BG 2. Walls - Improve finish left hand of basin at lower level Improve finish left hand of vertical trunking BG 3. Paint between worktop and trunking Linear 4. Ceiling Dirty tile to the left hand side of the basin Dirty tile to left hand internal cornoer above the hooks Dirty tile above notice board Damage tile at LH of column at left hand of door Ceiling Trim needs adjusted over basin
138	20551	All Rooms MPX				Various areas throughout the hospital building - there is evidence of open joints where they need to be sealed for hygiene and clinical cleanliness. See attached.
139	20437					See attached. Screws in all occassions should be domed or pan heads, not countersunk like what has been provided. Heads should be smooth and free to allow dusting/cleaning.
140	24567	Cycle Path and landscaping				Admit this may be work in progress but anxious that it is not forgotten about. Exposed, but partially bark covered, hole in planting. Perhaps this is a sleeved grout in for a fence post/sign? See atached images.
141	22286	B-PLANT-015A - PTS Plantroom	Piped Services	Drainage	Access Restrict for Maint.	Inaccessible drain, also no trap fitted or cover, photo attached
142	19568	B-COR-013 - Corridor				Fire collar has not been fitted correctly
143	19567	B-S1-015 - Refuse				Fire collar has not been installed correctly.
144	19885	G-COR-001 - Atrium	Door	Door Frame	Finish	This is Mercury issue to be closed out. this is result of pulling a spur for ED-00-011 from DCN lobby. Ryan Waddell aware. this has been walked. Finish of electrical installation to single Geze doors at RHCYP draught lobby/ entrance is disappointing and not aesthetically pleasing. Numerous oversize holes have been drilled in the door frame. A cable passes through the oversize hole to the actuator at the head of the door on the hinge side: nothing has been done ie fitting a grommet or edging to protect the cable from damage. Other holes have been left unstopped or poorly filled with silicone.

145	24565	B-S6-012 - Estates Library				beenclosed. Bouygues unable to reopen. Newzutec issuehas been raised. Following a review of the current design solution on site for the HV Distribution system and the SHTMs, BYES Technical personnel including our Authorising Engineers (AE's) Ian Clark Jamie Webster have concluded that a Physical Mimic Panel is required to be installed on site adjacent to the main BMS / ENMS Rooms and certainly within the vicinity of our working key cabinet. We have extracted the various comments below which details our position and have discussed with David Wilson (Commissioning Manager for Multiplex) on 06-02-2019 at 10:30AM where it was agreed that a further meeting between the Mercury Engineering AE and the Bouygues ES AE's may be required should you wish to discuss further. BYES however have major HS concerns with this solution not being provided in advance of handover. The Requirement to provide a Mimic panel is common practice across healthcare facilities and follows the guidance stipulated within the SHTM's and particularly the SHTM relevant to HV (SHTM 06-03 – Electrical Services – Electrical Safety Guidance for High Voltage Systems) which states that a mimic panel is to be provided, that displays the HV networks on site. This mimic panel should include any items that could back feed the HV system, such as fixed UPS units. Extract from SHTM 06-03 6.13 – Either a glass-covered or an electronic mimic diagram should be provided for any high voltage distribution system that includes a ring circuit, an automatic start generating set or a fixed uninterruptible power supply. A mimic diagram may also include, or be provided for, other electrical systems or installations. 6.14 – Where provided, the mimic diagram should be permanently installed in the same room as the working key cabinet. Glass cover of the mimic diagram should be kept locked to prevent unauthorised adjustment of the diagram. Adjustment of an electronic mimic is only to be possible using the Authorised Person's (HV) key or password.
146	22117	1-H2-021 - Single Bed 1	Floor Finishes	Vinyl	Damaged	Several scratches on floor - repairs need to be buffed
147	22085	1-H2-016 - Sample Processing	Floor Finishes	Vinyl	Damaged	Surface scratches to several areas - Repairs require buffing
148	22657	1-H2-013 - Equipment Store	Floor Finishes	Vinyl	Damaged	Scratches to flooring (Door code is C5789)
149	24563					Please find attached marked up items identifying Board observationa around the external of building
150	24548	4-R1-010 - Open Plan Desk Area				Make good door - door damaged on original installation of door contacts at door head - see attached.
151	21100	2-L2-082 - Single Bed 13 (Adult)	FFE	Nurse Call	Damaged	Scratch on trunking
152	21097	2-L2-140 - Single Bed 14 (Adult)	FFE	Nurse Call	Bedhead service incomplete	2 scratches on vertical trunking
153	21077	2-L2-094 - Single Bed 10 (Adult)	FFE	Nurse Call	Bedhead service incomplete	2 scratches ontrunking
154	21926	1-P1-175 - Reception (2 person)	Floor Finishes	Vinyl	Damaged	See photo - Poor attempt at repair.
155	21971	1-P1-001 - Corridor	Floor Finishes	Vinyl	Damaged	See photo. Scratch opposite physical measurement bay - repair requires buff
156	22593	1-B1-042 - Multidisplinary Work Area HDU	Floor Finishes	Vinyl	Damaged	Multiple scratches - repairs require buff.
157	22320	1-B1-009 - Open Plan Bay (4 bed)	Floor Finishes	Vinyl	Damaged	Deep scratch grey vinyl. Red dot in place from previous review - repair requires buff
158	24546	G-E1-012B - Switch Cup	Wall	Decoration/Finish	Incomplete	Underfloor Manifold in store room (Ground Floor) – Floor / Wall Needs to be finished and the pipes rising through the floor need adequate protection.

159	24545	G-E1-001 - Multi-Functional Activity Zone	Brookfield Multiplex			Atrium – There is no MEWP on site for access to maintain or also to access light fittings etc… again, Multiplex have a responsibility to design a suitable solution so that elements can be maintained, therefore as there is no gantry or birdcage walkway then suitable means of access is required to be provided. Can you please advise when this equipment will be on site so that we can adequately have our Engineers trained for this specific piece of specialist equipment. Can we also have confirmation from Structural Engineer that the Floor is suitable for the loadings provided and a berthing study provided for the equipment indicating the point load and an spreader plates where required? You have advised that room “Atrium Clean Equipment” is where the MEWP is to be stored and that the room size is satisfactory. We would note that there is no sufficient wall or door protection provided on the room to receive such equipment and needs to be addressed. You have also advised that the equipment will be charged via 110V, therefore please provide suitable 110V Transformer and Leads.
160	24100	G-Q1-077 - Admin Office (7 person)	Low Voltage	Lighting	Misc	On /off marks not on light switch
161	23189	1-L1-032 - Consult / Exam Room	Floor Finishes	Vinyl	Incomplete	Capping de-bonding.
162	24535	B-S6-012 - Estates Library			Misc	Bouygues are concerned about the omission ofan HVmimic panel within the RHCYP. This is a requirement stated in the SHTM 06-03 6.14 Where provided, the mimic diagram should be permanently installed in the same room as the working key cabinet. The glass cover of the mimic diagram should be kept locked to prevent unauthorised adjustment of the diagram. Adjustment of an electronic mimic is only to be possible using the Authorised Person’s (HV) key or a password. Note 3: A mimic diagram should show, as a minimum, the electricity distribution system and equipment that are under the control of the Authorised Person (HV).
163	24536	2-PLANT-001 - Theatre Plant Room				Damaged door - see atached.
164	24537					Incomplete plant room floor seal - see attached.
165	24542	4-R1-002 - Management/Conference Room				Henshaw- replace glass unit as previous instruction. Heavy pitting on intenal face of glass - see attached.
166	24544	4-R1-001 - Management/Conference Room				Scratch on mullion - see attached image.
167	24538					Spalled brickwork at pedestrian gate within service yard. See attached.
168	24541	2-COR-009 - Corridor				Poor finish on frame to dry lining - see attached.
169	24498		Low Voltage	Lighting	Misc	Lighting above main water tank non existant, lighting levels very low for maintenance.
170	24501	All Rooms MPX	Brookfield Multiplex			see pdf attached for snag locations 2. Chipped sign (ascot)
171	24507	All Rooms MPX	Brookfield Multiplex			see pdf attached for snag locations 8. mastic (pro sleanants)
172	24508	All Rooms MPX	Brookfield Multiplex			see pdf attached for snag locations 9. cupboard hitting curtian track (deanestor)
173	9609	2-PLANT-001 - Theatre Plant Room	Low Voltage	Electrical General Installation	Misc	SWA cables and accompanying earth conductors have been clipped using plastic/ nylon cable ties. The cables should be clipped with either metal cable ties, all round band or cleats.
174	9607	2-PLANT-001 - Theatre Plant Room	Containment	Traywork / Basket	Misc	Tray insufficiently supported. No edge protection/ flashing fitted to edge of tray, as a result sheath of cables and associated earth cables may be damaged by edge of cutting into sheaths. Shape of tray being distorted by weight of cables/ bends of cables being incorrectly formed.
175	23828	G-A2-070 - Single Bed 2	Door	Door Frame	Misc	Please see photo nail protruding.- Nail removed, decoration to be made good.
176	24493	4-S7-003 - WC (A) (F)				Tactile 'toilet' sign (in braille) does not differentiate gender for both this toilet and the male. Should they not be gender specific signs in braille to avoid awkward situations in use.
177	24497	G-M1-039 - WC (acc chg)	alist Equipment & 3rd Fix	Pendant	Power Incomplete	
178	24496	G-M1-051 - Sub-waiting Area	Floor Finishes	Vinyl	Poor Workmanship	Poor finish to skirting at column and to South wall at East end
179	24494	G-Q1-026 - Corridor	Door	Door	Missing brush / intumescent strip	The brush/intumescent strip is now missing to door D-G-Q1-026, reinstate.
180	22512	2-L2-037 - Ensuite 4	Wall	Decoration/Finish	Dirty	Toilet and sink wall dirty eye and at high level
181	21802	G-D1-040 - Consult/Multi-Disciplinary	FFE	Worktop	Dirty	See photo. Pen/pencil marks

182	21007	2-M2-006 - Waiting Area				7.Ginko work still to be completed
183	21007	2-M2-006 - Waiting Area				4.Damage to feature and north wall Floor - Bubbles in vinyl skirting
184	21007	2-M2-006 - Waiting Area				3.Wooden feature - between top and ceiling needs filled in.
185	21007	2-M2-006 - Waiting Area				1.walls - Damage to wall (Ginko area)
186	21973	1-P1-012 - SDCU Discharge Lounge	Wall	Glazed Partition	Damaged	See photo damage o underside of glazed screen
187	24158	G-Z1-002 - Stair 02	Door	Door	Alignment Incorrect	Chips on basement doorframe to b-cor-001and firedoor doesn?t close properly - Door now closes properly, frame to be addressed by BG
188	23637	1-D1-015 - Play Therapy (inc messy play) Room	Wall		Misc	Pop nail Please see photo
189	24448	G-I1-007 - Catering Shop	Sink	Fittings	Misc	Hand wash sink to be knee operated
190	24445	G-I1-007 - Catering Shop	FFE	Cabinet	Missing	Cover missing at side of wall cabinet
191	20993	2-M2-001 - Corridor				Mark on wall above room door M2-011 Wall ne M2-022 and M2-023 wall needs sanded and painted. Damage on wall opposite M2-018 Scrape on floor (south exit of therapies department just before you go into the neurology ward)
192	20998	2-M2-023 - Multi-Purpose Rehab Room				1.Walls - Paint needs reviewed and made good above internal door 2.Floor - scratches on vinyl 3.FFE - Clock - clock face scratched and needs replaced Curtain rail fixings need reviewed
193	20999	2-M2-019 - Changing				1. Door - External door frame needs reviewed and made good 2. Floor - scratch on vinyle near rear wall
194	21002	2-M2-014 - WC (Acc) (P)				1. Door - damaged external bottom (L) side Finish around external and internal door surround needs to be made good Walls - walls need reviewed and made good Ceiling - paint on ceiling FFE - 2. Broken toilet seat needs replaced. 3. Missing pull cord fixing in totality
195	24464	2-T1-002 - IT Node Room	FFE	Cabinet	Missing	Support rails missing from two corner of both cabinets. See photos.
196	24467	2-T1-003 - IT Node Room	Door	Architrave	Damaged	Public facing architrave damaged and poor finish.
197	24470	1-T1-002 - IT Node Room	Wall	Decoration/Finish	Damaged	Cracking above door public facing. See photo.
198	24463	2-T1-001 - IT Node Room	Floor Finishes	Epoxy Flooring	Dirty	Needs cleaned/repainted. See photos.
199	24456	G-I1-007 - Catering Shop	FFE	Worktop	Missing	Access flap needs hook retainer (as per other flap access worktops- eg RHCYP main reception desk
200	24465	2-T1-004 - IT Node Room	Wall	Skirting	Missing	At back of cabinet. Far wall. See photos.
201	24455	G-I1-007 - Catering Shop	FFE	Bracket	Misc	Tariff board brackets not fitted to wall
202	24451	G-I1-007 - Catering Shop		Fittings	Misc	Scarf to pipes coming through walls
203	20512					For all Zip Hydro Tap Classic' Are all the units correctly commissioned inc filter flushing; Who is cleaning the units now they are in use; Are all the units now registered for warranties and servicing arrangements; and Please remove all the labels for hygiene purposes. See attached images.
204	20640					At roof level - poor jointing to flashing has led to an unpleasing stain to the render due to a drip run - see attached.
205	24471	1-T1-005 - IT Node Room	Door	Ironmongery	Function	Matlock lying on floor. Access control not on. See photo.
206	24477	G-T1-003 - IT Node Room	Floor Finishes	Paint	Missing	Box needs painted. See photo.
207	24469	1-T1-002 - IT Node Room	Door	Architrave	Damaged	Public facing damaged. See photo.
208	24474	1-T1-005 - IT Node Room	FFE	Sockets	Misc	Electric socket switch not working right hand wall on entry.
209	24478	G-T1-003 - IT Node Room	Wall	Skirting	Misc	Foil tape stuck to skirting back wall. See photo.
210	20926	G-D1-031 - Clean Utility				Door - External - damage to architrave - left hand lower level Ceiling - Cracks around hatch above door Red Dots - still in place where area still needs to be painted.
211	18398	3-C1.1-002 - IPS Room				There is no ventilation in this room. There is a reasonable risk that the IPS unit could overheat and trip out.
212	23658	2-R1-050 - Open Plan Desk Area	FFE	Data Outlet	Damaged	Floor box 064 - which is labelled in the CSM and relates to desk 064, The floorbox lid has a missing part and the data sockets are not fitted to a plate. See photos.

213	19804	B-PLANT-002 - Plant Room 15	Ventilation	Ductwork	Misc	We recently reviewed together one of the Heat stations within the basement of the building, attached are some of the photographs taken. With the recent major water leak which occurred in the building I would like to make you aware of some of our main concerns, Alan will load these onto Zutec as a Snag and Clive will be updating the BYES Risk Register. We have Concerns on Room temperature and the risk to Life Cycle of Plant Equipment within the Heat stations, the temperatures within the Heat stations have been found to be in Excess of 30degC. We have Concerns on the air change rate being achieved in the space, the heat gain and the lack of cooling within the space. Upon inspection the flow rate is negligible. Can you when available prove design condition. We have Concerns on the pressure / temperature of the various systems within the heat stations where systems are operating above both the test pressure and the safety valve setting. Some safety valves have been discharging and will need to be reset / replaced and relevant certification provided. A review of the maximum temperature / pressure within the system components should be done. Some of the Safety valves are discharging in the vicinity of Electrical equipment and need to be routed to drains / tundish.
214	19945	B-COR-005 - Riser Access	Low Voltage	Electrical General Installation	Misc	The lift control panels located at the end of the corridor are within a newly createdswitch cupboard. The Panel door on the LHS panel appears to strike the side of the cupboard door frame when opened.restricting access to the internals of this panel. I had no means to access this panel and would like this panel door demonstrated to ensure that it can be fully opened.
215	16640	2-COR-010 - Corridor				This area appears to be an Atrium balcony. SHTM 81 Part 3 clause 3.37 states A minimum of two exits should be provided from each balcony or bridge so that at least one remains available in the event of a fire. The door at one end is secured by the door access system. Building Standards require that such doors which are a means of escape should 1. fail open in the event of apower failure 2. open when the local fire zone activates and 3, be provided with a mechanical means of overriding the lock or if this is not possible a double pole switch fitted at the door which will override the lock. Clause 3.30 also staes that Manual call points should be provided at all exits from the atrium.
216	24480	G-T1-003 - IT Node Room	Floor Finishes	Vinyl	Lifting	At door join. See photo.
217	24491	G-T1-005 - IT Node Room	Wall	Skirting	Misc	Tape on skirtings.See photo.
218	21005	2-M2-017 - Changing				BG. 1 Door - finish to external /internal door and bottom (right side) needs reviewed and made good BG. 2. Bump on wall near disable rail optimal for BG. 3.FFE- paint on nurse call and smoke detection unit
219	23121	2-COR-012 - Lift Lobby	Door	Door	Damaged	All riser doors damaged
220	21252	G-D2-005 - Cardio Pulmonary Exe Lab	Door	Architrave	Damaged	See photos. Various damages inside and outside door.
221	20962	2-G2-002 - DSR	Brookfield Multiplex			Walls: Paintwork needs tidying up around door frame and touch up on walls. Dink in the wall. FFE : Mastic required between sink top and side top side. CLI107 MISSING FELXIGRIP X 3
222	21006	2-M2-018 - Changing				Finish to both internal and external door surround needs reviewed and made good. Walls - Holes on north wall Floor - cut in vinyl floor next to door stop
223	21000	2-M2-022 - WC (Acc) (P)				External and internal door surround needs reviewed and made good. Wall - wall left side of door needs reviewed and made good
224	20779					Air intakes from pentland louvres are open to the plant room
225	21009	2-M2-004 - Interview Room 1				External facings finish poor and needs made good Internal door frame has chips and needs made good Walls - East Wall has dirty marks. Damage paint on feature wall. Damage to paintwork around termostat, BMS and light switch FFE - North Wall hooks all squint Ginko work still to be completed and room cleaned
226	24086	4-PLANT-003 - Helipad Fire Suppression Plant				Missing bird point is allowing birds to roost and droopings are evident to the door of the container - see attached.
227	20882	2-L2-136 - Isolation Ensuite 16				Grill on door results in a patient privacy issue. This needs amended.
228	20963	2-G2-005 - Disposal Hold	Brookfield Multiplex			FFE : Black mark on wall and plug around the plug requires mastic
229	20954	B-PLANT-001A - Plant Room 15				Drainage pipes running into HV room - see attached.
230	21048	3-C1.8-004 - Corridor	Door	Door	Misc	Door contacts missing on double doors 3-z1-008 to fire escape lobby

231	21001	2-M2-012 - Treatment Room				Floor - Tearin vinyl next to OUT010s. Plastic skirting not finished and coming off wall IPS panel scratched at bottom
232	21010	2-M2-005 - Interview Room 2				Door surround (internal and external) still to be finished (sanded and painted) Walls - paint incomplete around ginko work. Poor finish around thermostat. Hooks squint Gap above wooden frame and ceiling - dust hazard and needs filled in Ceiling - dirty ceiling tiles LED strip light hanging down
233	21579	G-FM-006 - Lift 17	alist Equipment & 3rd Fix	Radiant panel		The thermostats will need raised to ceiling height as otherwise they will get damaged. This has already been raised.
234	21918	1-P1-164 - Changing	Ceilings	Extract Vent	Damaged	Vent edge scuffed
235	22182	1-H2-026 - Corridor	Door	Door	Misc	Door to fire escape needs contacts alarms fitted to secure stairwell from patient escape
236	22448	1-B1-026 - Single Bed Isolation Cubicle 15	Wall	Glazed Partition	Damaged	Damaged in several areas on partition to corridor
237	22454	1-B1-023 - Staff Base (1P)	Wall	Glazed Partition	Damaged	Damage to left side of frame
238	22462	1-B1-031 - Open Plan Bay (4 bed)	Wall	Glazed Partition	Poor Joints	Joint gapping at top first screen
239	22468	1-B1-031 - Open Plan Bay (4 bed)	Wall	Glazed Partition	Poor Joints	Poor finish around frame and seal at partition at sink
240	22926	All Rooms MPX	Low Voltage	Lighting	Misc	Already we have identified ballasts within light fittings that are now obsolete, these are supplied by Whitecroft. Further to recent enquiries regarding quotations for spare ballasts and other lighting spares, we have been advised by Rexel Ltd that the Philips HF-Ri TD 3 14/24 TL5 E+ Electronic Ballast (3 x TLS 14/ 24W Warm Start) (Rexel order code 2450010461) is about to become obsolete. A separate request for a quotation regarding the same list of spares led to Bradstone Lighting Ltd., advising us that the Tridonic LCAI 35W 350mA-900mA ECO C Art. No. 28000124 LED Driver Digital 1-100% is already obsolete.
241	24256	2-Z1-003 - Stair 03	Stair	N/A	Damaged	Multiple scratches to steel bannister between 2nd floor landing and first half landing
242	24267	2-R1-001 - Staff Room	Door	Kickplates / pushplates	Bowing	
243	24271	2-R1-001 - Staff Room	Ceilings	Light Fittings	Misc	Light switch not turning lights off
244	24270	2-R1-001 - Staff Room	Floor Finishes	Vinyl	Damaged	Gouge in vinyl
245	24272	2-R1-003 - Meeting Room (4 person)	Ceilings	Light Fittings	Misc	Light switch not turning lights off/on
246	24273	2-R1-006 - Meeting Room (6 Person)	Ceilings	Light Fittings	Misc	Light switch not turning lights off/on
247	24275	2-R1-005 - Beverage Bay	Sink	Fittings	Misc	Hydro tap unit box facing wrong way
248	24276	2-R1-057 - Corridor	Door	Signage	Wrong Location	Door number on wrong side of door leading to 2-r1-049
249	24277	2-R1-057 - Corridor	Door	Signage	Wrong Location	Door number on wrong side of door leading to 2-r1-049
250	24279	2-R1-009 - Printer/Photocopier Room	Wall	Decoration/Finish	Incomplete	Low level behind door
251	24281	2-R1-057 - Corridor	Ceilings	Light Fittings	Incomplete	Switches not turning lights off
252	24285	2-R1-013 - WC - Staff (F)	Sink	Fittings	Misc	U bend issue first sink
253	24286	2-R1-013 - WC - Staff (F)	Sink	Fittings	Misc	Pipe sleeves missing
254	24291	2-R1-030 - 1:1	Ceilings	Light Fittings	Faulty	Light not staying on
255	24439	G-I1-007 - Catering Shop	Brookfield Multiplex	Suspended Ceilings	Missing	CCTV missing above till point
256	24444	G-I1-007 - Catering Shop	FFE	Cabinet	Missing	Cabinetry needs sealed to floor
257	24449	G-I1-007 - Catering Shop	Sink	Fittings	Misc	Fridge x1 to be exchanged with a dishwasher
258	23608	1-D7-006 - Dressings Room (Burns)	Ceilings	Light Fittings	Dirty	Dirty light cover
259	22687	G-A2-012 - Single Bed 17	Floor Finishes	Vinyl	Poor Workmanship	Gaps above capping around the room. Photo examples
260	24290	2-R1-021 - Beverage Bay	FFE	Cabinet	Damaged	Shelf under hydro tap damaged

261	24437	G-I1-007 - Catering Shop	FFE	Data Outlet	Missing	Phone point missing at back wall under where distribution board has been moved up
262	24293	2-R1-026 - Beverage Bay	Sink	Fittings	Misc	
263	24284	2-R1-013 - WC - Staff (F)	Door	Signage	Damaged	Graphics damaged. Ladies wc
264	24296	2-R1-049B - Open Plan Desk Area	FFE	Data Outlet	Damaged	Desks and floor boxes in this area are labelled: Floorbox 042 one of the doors on the data point is missing. Floorbox 047 the plate where the data points go have been pushed through. Floorbox 056 the data point isn't flush with the plate. Photos add.
265	24297	2-R1-049B - Open Plan Desk Area	FFE	Data Outlet	Damaged	The electric socket in this floorbox is broken. Floorbox 022 See photo.
266	24282	2-R1-050 - Open Plan Desk Area	Ceilings	Light Fittings	Misc	Cover missing from sensor
267	24288	2-R1-020 - Printer/Photocopier Room	Wall	Decoration/Finish	Poor Finish	Seal air on unit to wall
268	24283	2-R1-050 - Open Plan Desk Area	FFE	Hook	Missing	Hook missing
269	24438	G-I1-007 - Catering Shop	FFE	Data Outlet	Missing	Double data missing under till point
270	24289	2-R1-020 - Printer/Photocopier Room	Door	Architrave	Incomplete	Mastic behind door
271	24294	2-R1-063 - Corridor	Wall	Decoration/Finish	Poor Finish	RH side disposal hold, low level
272	24441	G-I1-007 - Catering Shop	Ceilings	Plasterboard	Incomplete	Seal required alongside shutter containment
273	24442	G-I1-007 - Catering Shop	Ceilings	Suspended Ceilings	Misc	Seal required at wiring for alarm
274	24447	G-I1-007 - Catering Shop	Wall	Decoration/Finish	Incomplete	Make good wall around and under distribution board
275	24450	G-I1-007 - Catering Shop	Wall	Decoration/Finish	Poor Finish	Finish around sockets poor
276	24454	G-I1-007 - Catering Shop	FFE	Dispenser	Missing	Soap and towel dispensers missing from hand wash sink
277	24452	G-I1-007 - Catering Shop	FFE	Cabinet	Misc	Leading edge of unit needs sealed and made safe
278	24457	G-I1-007 - Catering Shop	FFE	Worktop	Misc	Access flap at wall needs mastic cleaned or re done
279	24453	G-I1-007 - Catering Shop	FFE	Cabinet	Misc	Seal worktop to upstand
280	24298	2-R1-049A - Open Plan Desk Area	FFE	Data Outlet	Damaged	Number of floorboxes in this area have issues, boxes are labelled inside; Floorbox 014 cable mgmt hatch; Floorbox 020 cable mgmt red bracket missing; Floorbox 021 hole in the plate; Floorbox 026 part of floorbox broken off. Photos attached.
281	24436					Movement in fascia - see attached image.
282	24363	G-Q1-056 - Corridor	Ceilings	Suspended Ceilings	Incomplete	Expansion joint gap, see photo
283	24314	G-Q1-125 - Recovery Area - 1 Place	Ceilings	Suspended Ceilings	Badly Cut Tiles	See photo Gap between trunking and ceiling needs finished off - shroud/trim to be fitted
284	24006	G-A2-041 - Ward Kitchen	Sink	Fittings	Misc	Hydro tap installation incomplete
285	24295	2-R1-063 - Corridor	Floor Finishes	Vinyl	Damaged	At exit to POD bridge
286	24300	G-Q1-001A - Corridor	Wall	Decoration/Finish	Incomplete	Not finished above paediatric imaging entrance, not finished under wall protection, finish around sockets, above wall protection, at swipe into q1-147, various places with paint roller marks, various dirty marks.
287	24305	G-Q1-113 - Dirty Utility	Door	Door Frame	Finish	See photo
288	24306	G-Q1-113 - Dirty Utility	Wall	Decoration/Finish	Damaged	See photo
289	24310	G-Q1-132 - WC - WCH	Door	Door Frame	Damaged	See photo
290	24311	G-Q1-125 - Recovery Area - 1 Place	Door	Door Frame	Damaged	See photo
291	24312	G-Q1-125 - Recovery Area - 1 Place	Wall	Decoration/Finish	Damaged	See photo
292	24313	G-Q1-125 - Recovery Area - 1 Place	Low Voltage	Small Power / Sockets / Spurs etc	Damaged	See photo
293	24318	G-Q1-125 - Recovery Area - 1 Place	Floor Finishes	Vinyl	Damaged	
294	24319	G-Q1-125 - Recovery Area - 1 Place	Door	Vision Panel	Misc	Screw holes need filled in.
295	24320	G-Q1-131 - WC - Staff	Door	Door Frame	Damaged	Screw holes need filled in.
296	24321	G-Q1-131 - WC - Staff	Door	Door Frame	Damaged	See photos
297	24322	G-Q1-121 - Baby/Infant Feeding	Ceilings	Plasterboard	Fixings	See photo Cover gaps missing
298	24325	G-Q1-120 - MRI Reporting	Wall	Plasterboard	Damaged	Plaster board bulging. See photon
299	24326	G-Q1-120 - MRI Reporting	Ceilings	Suspended Ceilings	Dirty	Ceiling tiles dirty in various locations.
300	24327	G-Q1-120 - MRI Reporting	Ceilings	Suspended Ceilings	Incomplete	Fixing of grid not great. Needs amended.
301	24328	G-Q1-120 - MRI Reporting	Wall	Decoration/Finish	Damaged	Finish around sockets needs improved upon
302	24329	G-Q1-120 - MRI Reporting	Envelope	Mastic	Incomplete	No mastic fixed.
303	24330	G-Q1-120 - MRI Reporting	Door	Door Frame	Missing	Missing ironmongery

304	24331	G-Q1-119 - Waiting	Wall	Decoration/Finish	Incomplete	See photo. Picture does not really show up issue in photo but accent wall feels gritty and bumpy to touch. There are also blemishes on this wall. See patch around noticeboard.
305	24332	G-Q1-119 - Waiting	Floor Finishes	Vinyl	Dirty	Floor-box surrounds needs tidied around edging and fixed properly. See photo. All four sides
306	24333	G-Q1-126 - WC - WCH	Door	Door Frame	Damaged	See photo
307	24334	G-Q1-126 - WC - WCH	Ceilings	Plasterboard	Damaged	Hole in ceiling
308	24335	G-Q1-126 - WC - WCH	Wall	Decoration/Finish	Flashing	See photo
309	24337	G-Q1-128 - Changing (acc)	Door	Door Frame	Finish	See photo though this does not show extend of poor finish Finish at doorframe against wall poor
310	24338	G-Q1-128 - Changing (acc)	Wall	Decoration/Finish	Damaged	See photos.
311	24339	G-Q1-128 - Changing (acc)	Ceilings	Extract Vent	Misc	See photos. Finish around light fixture plus vents poor finish. See photo
312	24340	G-Q1-128 - Changing (acc)	FFE	Nurse Call	Pull Cord Position incorrect	Poor Finish around pull cord
313	24341	G-Q1-129 - Changing (acc)	Door	Door Frame	Finish	Poor Finish
314	24343	G-Q1-129 - Changing (acc)	Wall	Decoration/Finish	Poor Finish	Poor finish around disabled bars, thermostat and domestic plug. Flood tide line showing in room.
315	24344	G-Q1-129 - Changing (acc)	Ceilings	Plasterboard	Poor Finish	Ceiling poor finish.
316	24346	G-Q1-127 - Changing - WCH	Door	Kickplates / pushplates	Damaged	See photo
317	24347	G-Q1-127 - Changing - WCH	Wall	Decoration/Finish	Poor Finish	See photos
318	24348	G-Q1-127 - Changing - WCH	Floor Finishes	Vinyl	Damaged	See photos
319	24349	G-Q1-161 - Trolley Bay	Wall	Decoration/Finish	Damaged	See photos
320	24352	G-Q1-107 - Corridor	Wall	Decoration/Finish	Damaged	See photos Door leading into cor 056
321	24353	G-Q1-107 - Corridor	Door	Door Frame	Damaged	See photos Door leading into Cor 116
322	24354	G-Q1-107 - Corridor	Wall	Protection	Misc	See photo
323	24356	G-Q1-107 - Corridor	Low Voltage	Lighting	Incomplete	See photo Light not working into corridor 087;
324	24358	G-Q1-116 - Corridor	Wall	Decoration/Finish	Damaged	See photos Various locations
325	24359	G-Q1-116 - Corridor	FFE	Panel	Missing	See photo Missing scarf round top of unit
326	24360	G-Q1-056 - Corridor	Door	Door Frame	Finish	Behind door frame incomplete , close to disposal hold room
327	24361	G-Q1-056 - Corridor	Wall	Protection	Misc	Majority of corner wall protection loose and needs fixed properly
328	24362	G-Q1-056 - Corridor	Wall	Decoration/Finish	Incomplete	See photos. Beside fire extinguishers. Damage in wall behind door leading to way out before DCN waiting area
329	24364	G-Q1-056 - Corridor	Wall	Plasterboard	Incomplete	Crack in wall See photo
330	24365	G-Q1-056 - Corridor	Wall	Decoration/Finish	Poor Finish	
331	24366	G-Q1-056 - Corridor	Floor Finishes	Vinyl	Damaged	See photo and close to inpatient waiting area, adult side
332	24367	G-Q1-056 - Corridor	Floor Finishes	Vinyl	Damaged	Capping debonding opposite room 058.
333	24372	G-COR-008 - Corridor	Envelope	Window	Scratched	Scratches on windowsill
334	24373	G-COR-008 - Corridor	Envelope	Window	Misc	Screw heads in glazed screen
335	24374	G-COR-008 - Corridor	Envelope	Window	Misc	End cap to be fitted on bumper rail to right of outside exit door
336	24375	G-COR-008 - Corridor	Floor Finishes	Vinyl	Damaged	Replace vinyl on manhole cover and ensure screws flush
337	24376	G-COR-008 - Corridor	Floor Finishes	Vinyl	Skirting De-Bonded	Capping debonding curved wall

338	24378	G-COR-008 - Corridor	Wall	Decoration/Finish	Poor Finish	Poor paint finish to right side DCN Imaging door
339	24379	G-COR-008 - Corridor	Wall	Plasterboard	Misc	Shrinkage caused gap in wall panels
340	24380	G-COR-008 - Corridor	Wall	Decoration/Finish	Poor Finish	Poor finish round switch cupboard door G- M1- 052
341	24381	G-COR-008 - Corridor	Wall	Decoration/Finish	Dirty	Mark on pillar before door
342	24382	G-COR-008 - Corridor	Wall	Decoration/Finish	Poor Finish	Decoration incomplete round door
343	24383	G-COR-009 - Corridor	Wall	Protection	Missing	Bumper rails to be fitted
344	24384	G-COR-009 - Corridor	Wall	Decoration/Finish	Poor Finish	Decoration round door
345	24385	G-COR-009 - Corridor	Wall	Decoration/Finish	Poor Finish	Decoration round door
346	24386	G-COR-009 - Corridor	Door	Door	Missing	Door closer trim missing
347	24387	G-COR-009 - Corridor	Wall	Decoration/Finish	Poor Finish	Decoration round door
348	24388	G-COR-009 - Corridor	Door	Architrave	Damaged	Door architrave damaged both sides
349	24389	G-COR-009 - Corridor	Wall	Decoration/Finish	Poor Finish	Poor finish round lift indicator panel and door head
350	24390	G-COR-009 - Corridor	Wall	Decoration/Finish	Poor Finish	Poor finish round door G Z1 003
351	24393	G-COR-009 - Corridor	Wall	Decoration/Finish	Poor Finish	Gap round centre lift indicator panel
352	24394	G-COR-009 - Corridor	Wall	Protection	Dirty	Mark round lower protection
353	24396	G-COR-010 - Corridor	Wall	Protection	Damaged	Damage to corner protection to right of door G A1 00 1B
354	24397	G-COR-010 - Corridor	Wall	Decoration/Finish	Damaged	Damage to wall by door closer
355	24399	G-COR-011 - Corridor	Door	Door	Damaged	Door sign damaged
356	24400	G-COR-011 - Corridor	Wall	Protection	Missing	Patch painted and bumper rail completed
357	24401	G-COR-011 - Corridor	Floor Finishes	Vinyl	Skirting De-Bonded	Debonding at window 1st right of door
358	24402	G-COR-011 - Corridor	Floor Finishes	Vinyl	Damaged	General scratches on floor
359	24404	G-COR-011 - Corridor	Floor Finishes	Carpet	Misc	Refit matting at door
360	24411	G-COR-007 - Corridor	Wall	Decoration/Finish	Dirty	Under display box
361	24412	G-COR-007 - Corridor	Wall	Decoration/Finish	Poor Finish	Round pillar at base
362	24413	G-COR-007 - Corridor	Wall	Decoration/Finish	Dirty	Opposite staff courtyard door
363	24414	G-COR-007 - Corridor	Wall	Decoration/Finish	Poor Finish	Cutting in poor round riser plant door
364	24417	G-COR-007 - Corridor	Wall	Protection	Missing	Wall and bumper rail to be completed
365	24418	G-COR-006 - Corridor	Wall	Decoration/Finish	Poor Finish	Poor finish above capping below ward signage
366	24419	G-COR-005 - Corridor	Door	Door Frame	Damaged	Damage to both sides of door g cor 003 plus chip x2 on door
367	24420	G-COR-003 - Corridor	Wall	Decoration/Finish	Poor Finish	At side of g cor 003 door
368	24421	G-COR-003 - Corridor	Door	Door	Missing	Screws missing both sides of faceplate on door
369	24422	G-COR-003 - Corridor	Door	Vision Panel	Damaged	Damage to beading
370	24423	G-COR-003 - Corridor	Wall	Decoration/Finish	Poor Finish	Poor finish at both sides of door and at cardreader of door a2 085
371	24424	G-COR-003 - Corridor	Door	Architrave	Damaged	Replace architraves with full height have been cut g cor 003
372	24425	G-COR-003 - Corridor	Door	Door	Damaged	Chip in door and screws missing in door protector g cor 003
373	24426	G-COR-003 - Corridor	Door	Door	Function	Hold over part of closer not working g cor 003
374	24427	G-COR-003 - Corridor	Wall	Decoration/Finish	Poor Finish	Poor finish at right side of door g cor 003
375	24428	G-COR-003 - Corridor	Wall	Decoration/Finish	Poor Finish	Poor finish at video entry and card reader door g F1 097
376	24429	G-COR-002 - Corridor	Door	Architrave	Damaged	Chips in architrave near entrance
377	24430	G-COR-002 - Corridor	Door	Vision Panel	Incorrect	Glass loose and no filler in beading near entrance between corridor 2 and 13
378	24431	G-COR-002 - Corridor	Door	Door Frame	Finish	Poor paint finish door between corridor 2 and 13
379	24432	G-COR-002 - Corridor	Door	Door Frame	Finish	Poor paint finish door between corridor 2 and 13
380	23250	1-G3-007 - En-suite 3	FFE	PIR Sensor	Dirty	See photo
381	24159	G-Z1-002 - Stair 02	Stair	N/A	Damaged	Wood skirting split between basement level and half landing - decoration required
382	23964	G-A1-032 - Sitting Room	Ceilings	Suspended Ceilings	Dirty	Dirty tiles throughout - tile still to be changed with service within
383	24435	G-COR-013 - Corridor	Floor Finishes	Vinyl	Damaged	Scratch in vinyl at door
384	24299	G-Q1-001A - Corridor	Door	Door Frame	Finish	Double doors at paediatric imaging entranceScrew heads showing, external an internal frame needs finished.
385	24434	G-COR-013 - Corridor	Door	Door	Damaged	Chips out of door G Z1 001
386	24303	G-Q1-149 - Resource Room/Library	Door	Architrave	Damaged	See photo

387	24304	G-Q1-147 - Corridor	Door	Signage	Missing	At double doors near reporting room q1-137. Signage missing and disc with I?d number.
388	22735	1-B1-022 - Corridor	Wall	Decoration/Finish	Dirty	Please see photo.
389	24245	G-Z1-006 - Stair 06	Stair	N/A	Misc	Poor finish Please see photos
390	24302	G-Q1-147 - Corridor	Door	Architrave	Damaged	At door into q1-001. See photo
391	24409	G-COR-012 - Corridor	Door	Door	Damaged	Chip in door
392	24262	G-Z1-003 - Stair 03	Wall	Decoration/Finish	Dirty	Bottom of stairs at door to basement Grey paint on white wall
393	22938	1-L1-054 - Ward Kitchen	Floor Finishes	Vinyl	Glue on Capping	a bit dirty and messy looking.
394	23578	1-L1-087 - Ensuite 3	Door	Ironmongery	Adjust Keep	1. No keeper for door. complete 2.Linear - magic man fill hole.
395	23594	1-P1-153 - Preparation Room 4	Door	Door Frame	incorrect alignment	Top of door frame corridor side
396	23356	1-COR-010 - Corridor	Door	Door	Damaged	Both riser doors opposite external door damaged
397	24257	2-Z1-003 - Stair 03	Stair	N/A	Damaged	Multiple scratches to painted bannister between 2nd floor landing and first half landing
398	20430	3-K2-053 - Residents Play Room				Window handle does not close in full - see attached.
399	24247	3-Z1-007 - Stair 07	Ceilings	Plasterboard	Incomplete	Caps missing from two areas second floor next to lobby Please see photo
400	24263	B-Z1-003A - Stair 03	Door	Ironmongery	Damaged	Damage to lever handle on cupboard
401	24260	1-Z1-003 - Stair 03	Floor Finishes	Vinyl	Damaged	RH half landing towards ground level
402	24261	G-Z1-003 - Stair 03	Ceilings	Plasterboard	Missing	Cap missing radiant panel
403	23893	G-Q1-023 - Registrars Office (5 desks)	Door	Ironmongery	Adjust Lock	Not fully fitted - The timber has been rectified, now requires decoration.
404	23756	G-Q1-035 - Injection Room 1	Wall	Decoration/Finish	Poor Finish	Blank when panic alarm moved. Not acceptable. Plate removed and hole patched/taped/filled - Decoration required.
405	23967	G-A1-031 - Body Viewing	Ceilings	Suspended Ceilings	Dirty	Dirty and damaged ceiling tiles throughout room. 2 No tiles still to be changed - they have services within
406	23965	G-A1-032 - Sitting Room	Ceilings	Suspended Ceilings	Dirty	Damaged tiles near large ceiling light fitting, 1 No tile to change has service within.
407	20768	G-A2-035 - Single Bed 12				catheter dispenser RAC362 missing and BED2509 bed buffer is squint (Note that RAC 362 is NHS supply)
408	24025	G-A2-075B - General Store	Ceilings	Suspended Ceilings	Tile Damaged	Water damaged tiles - ceiling tile with smoke detector to be changed over.
409	22891	3-K2-021 - Family Room 6	Wall	Switches	Misc	Ving card making loud clunk noise on removal from holders in all bedrooms
410	24033	G-COR-001 - Atrium	Floor Finishes	Tiling	Misc	Debris in corner at emergency door to left of lobby.
411	24027	G-I1-001 - Draught Lobby	Ceilings	Plasterboard	Misc	Seals around fixings in ceiling appear incomplete there are a few gaps
412	24038	G-COR-001 - Atrium	Door	Door	Dirty	See photo frame and doors.
413	24041	G-COR-001 - Atrium	Wall	Decoration/Finish	Damaged	Dent in wall due to door g-i1-011. Please add a door stop.
414	24046	G-COR-001 - Atrium	FFE	Shelf	Damaged	At public telephone dcn end. See photos
415	24043	G-COR-001 - Atrium	Wall	Protection	Misc	Gaps at low level on corner protection to lift lobby. See photo
416	24047	G-COR-001 - Atrium	Wall	Decoration/Finish	Incomplete	Around sockets At public telephone dcn end.
417	24042	G-COR-001 - Atrium	Wall	Decoration/Finish	Incomplete	Area where toilets are g-i1-012 paint work damaged and incomplete in areas. See photo
418	24044	G-COR-001 - Atrium	Wall	Decoration/Finish	Dirty	Various dirty marks in atrium working from rhcyp to Dcn entrance. See photos
419	24045	G-COR-001 - Atrium	Wall	Decoration/Finish	Dirty	Various dirty marks in atrium working from rhcyp to Dcn entrance, opposite vending bay and between dcn visitor toilets. See photos
420	24048	G-COR-001 - Atrium	Envelope	Window	Damaged	Metal frames scratched at windows dcn end and incomplete/damaged seal. See photos
421	24049	G-COR-001 - Atrium	Door	Door Frame	Damaged	Metal frames scratched at side door dcn end. See photo
422	24050	G-COR-001 - Atrium	Floor Finishes	Tiling	Joint Alignment	Poor joint from atrium to acorn rooms. See photo
423	24051	G-COR-001 - Atrium	Floor Finishes	Tiling	Grouting Inadequate	Near staff room. See photo
424	24052	G-COR-001 - Atrium	Floor Finishes	Tiling	Damaged Tile	Near staff room. See photo
425	24054	G-COR-001 - Atrium	Floor Finishes	Tiling	Damaged Tile	Outside riser cupboards opposite nhs cafe. See photo
426	24055	G-COR-001 - Atrium	Floor Finishes	Tiling	Damaged	Grout repair different colour near lift lobby. See photo

427	24056	G-COR-001 - Atrium	Floor Finishes	Tiling	Grouting Inadequate	Near reception desk couple of areas. See photo
428	24076	G-COR-001 - Atrium	Door	Door	Finish	Grey paint on riser door.
429	24039	G-COR-001 - Atrium	Wall	Decoration/Finish	Poor Finish	Both sides of door wall finish poor paint work patchy on walls. See photos.
430	24037	G-COR-001 - Atrium	Floor Finishes	Tiling	Incomplete	See photo. Mastic morning swing near security office both sides.
431	24036	G-COR-001 - Atrium	Wall	Decoration/Finish	Incomplete	See photo. Mastic incomplete and rough in areas
432	24035	G-COR-001 - Atrium	Wall	Decoration/Finish	Incomplete	Paint patchy on ascent wall at imaging and tide line can be seen. Also patchy around lift area.
433	24034	G-COR-001 - Atrium	Floor Finishes	Tiling	Grouting Inadequate	Gaps in grouting at skirting at double doors to g-cor-013.
434	24029	G-I1-001 - Draught Lobby	Envelope	Window	Damaged	Multiple scratches and dents on metal frames. See photos as examples.
435	24026	G-I1-001 - Draught Lobby	Ceilings	Plasterboard	Damaged	Ceiling has marks possible damage scratches
436	24040	G-COR-001 - Atrium	Wall	Decoration/Finish	Poor Finish	Both sides of door wall finish poor paint work patchy on walls. Curved wall into atrium patchy. See photos.
437	24030	G-I1-001 - Draught Lobby	Door	Door	Damaged	Multiple scratches and dents on metal frame inner door. See photo.
438	20922	G-D1-042 - Shower	Brookfield Multiplex			Door/Wall Damage to door standard (LF) Back of architrave not painted (RH) Poor finish to RH of architrave. Ceiling - improve finish at shower FFE- broken pull cord
439	24028	G-I1-001 - Draught Lobby	Wall	Decoration/Finish	Damaged	Multiple scratches and dents on all metal columns. See photos as examples.
440	24136	3-Z1-003 - Stair 03				Issues and inconsistencies in finished floor install - see attached.
441	23902	G-D2-005 - Cardio Pulmonary Exe Lab	Envelope	Window	Misc	One way glass not fitted
442	24032	G-I1-002 - Wheelchair Bay	Ceilings	Plasterboard	Dirty	Paint and dirt on hatches.
443	24031	G-I1-002 - Wheelchair Bay	Ceilings	Plasterboard	Incomplete	Seals around hatches need filled.
444	24134	3-Z1-002 - Stair 02				Hole in ceiling finish - see attached.
445	24147	2-Z1-001 - Stair 01	Floor Finishes	Vinyl	Damaged	Scratch on flooring
446	24164	2-Z1-002 - Stair 02	Stair	N/A	Damaged	Splits in wood cove between 2nd and 3rd floors
447	24058	G-I1-013 - DSR	Wall	Decoration/Finish	Poor Finish	Around sockets.
448	24059	G-I1-011 - WC - WCH	Floor Finishes	Tiling	Gap	Gaps tiling to vinyl floor.
449	24060	G-I1-011 - WC - WCH	Wall	Decoration/Finish	Poor Finish	Poor finish
450	24061	G-I1-011 - WC - WCH	Floor Finishes	Vinyl	Incomplete	Capping at vinyl floor all round room
451	24063	G-I1-010 - WC (A) (V)	Floor Finishes	Tiling	Gap	Gaps tiling to vinyl floor.
452	24064	G-I1-010 - WC (A) (V)	Door	Door Frame	Finish	Cut in poor. Gaps in surround to fill.
453	24065	G-I1-010 - WC (A) (V)	Wall	Decoration/Finish	Poor Finish	Dirty, patchy, poor finish at blank panel.
454	24066	G-I1-012 - Assisted Changing/Nappy Change	Floor Finishes	Tiling	Gap	Gap tiling to vinyl.
455	24067	G-I1-012 - Assisted Changing/Nappy Change	Door	Door Frame	Finish	See photos
456	24068	G-I1-012 - Assisted Changing/Nappy Change	Floor Finishes	Vinyl	Incomplete	Vinyl to capping. See photo
457	24071	G-T1-005 - IT Node Room	Door	Door Frame	Finish	See photo
458	24072	G-I1-008 - Waiting Area	Floor Finishes	Tiling	Gap	See photo
459	24073	G-I1-008 - Waiting Area	Floor Finishes	Vinyl	Incomplete	See photo
460	24074	G-I1-008 - Waiting Area	Ceilings	Plasterboard	Poor Finish	Fills round all panels
461	24075	G-I1-008 - Waiting Area	Wall	Decoration/Finish	Poor Finish	Poor. See photo
462	24079	G-N1-005 - Wheelchair Bay	Door	Door Frame	Finish	Poor finish behind hinges
463	24077	G-N1-002 - DCN Lobby	Wall	Decoration/Finish	Damaged	Scratches on columns
464	24081	G-N1-004 - WC (A) (V)	Door	Door Frame	Damaged	Poor finish.
465	24082	G-N1-004 - WC (A) (V)	Floor Finishes	Vinyl	Skirting De-Bonded	Capping not stuck down
466	24083	G-N1-004 - WC (A) (V)	Wall	Decoration/Finish	Poor Finish	Painted wall poor.
467	24084	G-N1-003 - WC (WCH)	Door	Door Frame	Damaged	Whole frame damaged. Hole in wall right side
468	24087	G-Q1-058 - Acute Reporting	Door	Door Frame	Damaged	See photo, plus hinges missing screws
469	24089	G-Q1-061 - WC - WCH	Door	Door Frame	Damaged	See photo
470	24090	G-Q1-061 - WC - WCH	Wall	Decoration/Finish	Damaged	See photo
471	24091	G-Q1-062 - WC (A) (Patients)	Door	Door Frame	Damaged	See photo
472	24094	G-Q1-081 - Doppler Ultrasound	Wall	Decoration/Finish	Incomplete	See photos

473	24095	G-Q1-081 - Doppler Ultrasound	Low Voltage	Lighting	Lamp required	Light bulbs required in both desk lights.
474	24096	G-Q1-066 - Preparation Room	Door	Door Frame	Damaged	See photo.
475	24099	G-Q1-067 - WC - WCH	Wall	Decoration/Finish	Incomplete	Can see flood line mark on wall. Room could do with another coat of paint.
476	24101	G-Q1-077 - Admin Office (7 person)	Wall	Decoration/Finish	Incomplete	Can see tide mark round room. Could do with another coat of paint.
477	24104	G-Q1-077 - Admin Office (7 person)	Ceilings	Suspended Ceilings	Dirty	Dirty marks on radiant panel
478	24106	G-Q1-079 - Reception (2 person)	Wall	Decoration/Finish	Incomplete	See photos
479	24107	G-Q1-079 - Reception (2 person)	Wall	Decoration/Finish	Incomplete	Tide mark on column and feature wall
480	24109	G-Q1-075 - Consultant Office (5 person)	Door	Door	Finish	Nail holes around vision panel
481	24111	G-Q1-075 - Consultant Office (5 person)	Wall	Decoration/Finish	Poor Finish	Tide marks all round
482	24112	G-Q1-075 - Consultant Office (5 person)	Wall	Decoration/Finish	Poor Finish	Poor finish around door frame and phone
483	24113	G-Q1-074 - Consultant Office (5 person)	Wall	Decoration/Finish	Poor Finish	Bulge on column
484	24114	G-Q1-074 - Consultant Office (5 person)	Wall	Decoration/Finish	Poor Finish	Poor finish around phone
485	24117	G-Q1-073 - Quiet Reporting	Door	Door Frame	Finish	Dents. Photo
486	24118	G-Q1-073 - Quiet Reporting	Wall	Decoration/Finish	Poor Finish	Wall bulging tide marks
487	24119	G-Q1-073 - Quiet Reporting	Floor Finishes	Vinyl	Skirting De-Bonded	Wall bulging tide marks
488	24121	G-Q1-072 - Teleradiology/Reporting	Wall	Decoration/Finish	Incomplete	Lumps and bumps and tide mark
489	24122	G-Q1-072 - Teleradiology/Reporting	Wall	Decoration/Finish	Poor Finish	Lumps and bumps. Tide marks. Poor finish around cleaners socket
490	24123	G-Q1-070 - Changing	Wall	Decoration/Finish	Poor Finish	Poor finish around door frame.
491	24125	G-Q1-069 - Changing	Wall	Decoration/Finish	Poor Finish	Poor finish door frame and thermostat. Photo
492	24126	G-Q1-054 - Meeting Room (4 person)	Door	Signage	Damaged	Sign damaged. Photo
493	24127	G-Q1-054 - Meeting Room (4 person)	Door	Door Frame	Fill to hinges	Photo
494	24168	G-Q1-084 - Disposal Hold	Wall	Protection	Misc	Bulging wall protection at flood water level
495	24169	G-Q1-084 - Disposal Hold	Floor Finishes	Vinyl	Skirting De-Bonded	Behind door. Photo
496	24170	G-Q1-084 - Disposal Hold	Floor Finishes	Vinyl	Skirting De-Bonded	Behind door. Photo
497	24171	G-Q1-082 - Meeting Room (4 person)	Wall	Decoration/Finish	Poor Finish	Poor finish around wall controls. Above internal window
498	24173	G-Q1-083 - Photocopy Room	Wall	Decoration/Finish	Poor Finish	Under large notice board. Under wall cabinet. Around cleaners socket. Above large notice board
499	24175	G-Q1-089 - Inpatient Holding Bay	Wall	Decoration/Finish	Poor Finish	Poor finish around several sockets. Under wall cabinets. Under dado.
500	24178	G-Q1-089 - Inpatient Holding Bay	FFE	Sockets	Damaged	Fuse cover on spur E4Lp65l3 does not close
501	24179	G-Q1-089 - Inpatient Holding Bay	Wall	Dado	Misc	Poor finish under trunking in all three bed spaces see example photo
502	24180	G-Q1-084 - Disposal Hold	Door	Signage	Damaged	See photo
503	24181	G-Q1-098 - Recovery Bay	Door	Door	Finish	Nail holes around vision on corridor side
504	24182	G-Q1-098 - Recovery Bay	Wall	Decoration/Finish	Poor Finish	Bulge in wall under danicentre
505	24183	G-Q1-098 - Recovery Bay	Wall	Decoration/Finish	Poor Finish	Poor finish around thermostat. Under horizontal trunking requires paint and mastic. Photo
506	24186	G-Q1-098 - Recovery Bay	Ceilings	Light Fittings	Faulty	Ceiling light nearest clock not working
507	24190	G-Q1-098 - Recovery Bay	Ceilings	Light Fittings	Faulty	Ceiling light nearest clock not working
508	24191	G-Q1-030 - GC Admin Office (2 person)	Door	Signage	Missing	Door sign missing
509	24194	G-Q1-035 - Injection Room 1	Door	Ironmongery	Misc	Blind handle should be on the inside
510	24195	G-Q1-036 - Recovery Area	Door	Ironmongery	Missing	Missing door keep
511	24199	G-Q1-039 - Gamma Camera 1	Door	Ironmongery	Adjust Lock	unable to open door at all
512	24200	G-Q1-045 - Injection Room 2	Door	Ironmongery	Adjust Lock	Blind handle should be on the inside
513	24201	G-Q1-108 - Injection Room	Wall	Decoration/Finish	Poor Finish	Right of ips panel in corner poor finish. Also under wall cabinets. Also under dado. Also around telephone socket
514	24202	G-Q1-108 - Injection Room	Floor Finishes	Vinyl	Skirting De-Bonded	Debonding in three places
515	24203	G-Q1-094 - Sub Wait	Ceilings	Plasterboard	Alignment	Finish around radiant panel. Photo
516	24204	G-Q1-094 - Sub Wait	Ceilings	Plasterboard	Alignment	Gap at extractor panel - fit tight to ceiling
517	24205	G-Q1-095 - Changing	Wall	Decoration/Finish	Poor Finish	Poor finish around door frame. Photo

518	24206	G-Q1-095 - Changing	Door	Door Frame	Poor Finish	Poor finish photo
519	24207	G-Q1-096 - Changing	Wall	Plasterboard	Damaged	Bulging walls
520	24208	G-Q1-096 - Changing	Floor Finishes	Vinyl	Skirting De-Bonded	Debobding behind door and under cleaners socket
521	23670	G-M1-050 - DSR	Door	Door Frame	Finish	repair door frame chip . See photo
522	24209	G-Q1-096 - Changing	Door	Door Frame	Finish	Poor finish. Photo
523	24210	G-Q1-103 - Changing	Door	Door Frame	Finish	Poor finish. Photo
524	24212	G-Q1-103 - Changing	Wall	Plasterboard	Damaged	Line in plaster board all around
525	24213	G-Q1-104 - Changing	Wall	Decoration/Finish	Poor Finish	Poor finish behind door
526	24214	G-Q1-104 - Changing	Wall	Plasterboard	Damaged	Bulges in plaster board
527	24215	G-Q1-105 - Changing	Wall	Plasterboard	Damaged	Bulges in plaster board
528	23687	G-M1-035 - WC Staff	Door	Door Frame	Damaged	See photo
529	24216	G-Q1-105 - Changing	Door	Door Frame	Finish	Poor finish behind door
530	24217	G-Q1-105 - Changing	Floor Finishes	Vinyl	Skirting De-Bonded	Debonding at column
531	24218	G-Q1-105 - Changing	Wall	Plasterboard	Damaged	Plasterboard screw coming through
532	24219	G-Q1-105 - Changing	Ceilings	Plasterboard	Incomplete	Unfinished at light fitting
533	24220	G-Q1-106 - Changing	Wall	Decoration/Finish	Incomplete	Some patches on wall opposite door
534	24221	G-Q1-106 - Changing	Ceilings	Plasterboard	Incomplete	Poor finish around light fitting
535	24223	G-Q1-115 - Adult Waiting Area	Floor Finishes	Vinyl	Poor Workmanship	Poor finish around capping
536	24225	G-Q1-114 - Store Room	Wall	Decoration/Finish	Poor Finish	Poor finish above and below dado
537	24227	G-Q1-097 - WC - WCH	Ceilings	Plasterboard	Gap Around Service Penetration	Gap. Photo
538	24228	G-Q1-097 - WC - WCH	Wall	Decoration/Finish	Poor Finish	Between wall and capping
539	24229	G-Q1-097 - WC - WCH	Door	Door Frame	Fill to hinges	Photo
540	24230	G-Q1-112 - Clean Utility	Wall	Plasterboard	Damaged	Slight bulge
541	24231	G-Q1-112 - Clean Utility	Wall	Decoration/Finish	Poor Finish	Poor finish under wall cabinets and around two sockets
542	24234	G-Q1-109 - WC (A)	FFE	Mirror	Damaged	Damage to mirror
543	24236	G-Q1-109 - WC (A)	Wall	Decoration/Finish	Incomplete	Photo
544	24128	G-Q1-054 - Meeting Room (4 person)	Wall	Decoration/Finish	Poor Finish	Poor finish around internal window and sockets
545	24129	G-Q1-054 - Meeting Room (4 person)	Door	Door Frame	Poor Finish	See photo
546	24151	G-Z1-001 - Stair 01	Door	Door	Damaged brush / intumescent stip	Missing strips
547	24152	G-COR-003 - Corridor	Door	Door	Damaged brush / intumescent stip	LH door facing to Melville entrance
548	24153	G-COR-003 - Corridor	Door	Door Frame	Damaged	LH door facing to Melville entrance
549	24150	G-Z1-001 - Stair 01	Door	Door Frame	Damaged	Corridor lobby side of door G Z1-001 chipped
550	24155	G-COR-003 - Corridor	Door	Kickplates / pushplates	Missing screws	RH door facing to Melville entrance
551	16915	G-X1-001 - EC: Plant Room 1	Stair			Intermediate support brackets for galvanized steel ladder to mezzanine level above boilers have been cut off. (Offcut bracket has been discarded in the web of a column of structural steel). Surely this will affect the mechanical integrity (SWL) of the ladder as the intermediate supports are so close to the joints between the two sections of the ladder?
552	21582	G-FM-006 - Lift 17	Wall	Protection	Wrong Location	The protection applied to safeguard the HV cabinets is poorly positioned and too low to safeguard the cabinets. It will need altered.

553	23613	1-D7-003 - Dressings Room (Burns)	Wall	Decoration/Finish	Poor Finish	Poor finish. Please see photo
554	23318	1-D1-018 - Consult/Examination (Ophthalmology)	Wall	Decoration/Finish	Damaged	Scratches on wall
555	24160	G-Z1-002 - Stair 02	Ceilings	Light Fittings	Missing	Light diffuser missing above directional signage
556	24162	1-Z1-002 - Stair 02	Floor Finishes	Vinyl	Missing	Mastic half landing between 1st and 2nd floor
557	23763	G-Q1-036 - Recovery Area	Ceilings	Suspended Ceilings	Tile Damaged	Stained Smoke detector set within tile
558	23385	1-COR-006 - Corridor	Ceilings	Suspended Ceilings	Dirty	Most tiles dirty and damaged - there are 2 tiles to be changed which have services in them - PIR smoke detector
559	20268	1-P1-044 - Operating Theatre 2				Both windows in Theatre 31 are cracked - see attached images.
560	5962	2-M3-003 - Treatment Area	Containment	Trunking	Misc	Trunking lid bashed.
561	20420					Area 3-C1.4-027 Drywall screw showing on plasterboard wall finish inbetween shelves. See attached.
562	20418					Area 3-C1.4-076 Marks on wall finish and barcode sticker left - see attached.
563	23092	2-COR-006 - Corridor	Envelope	Window	Misc	Poor finish internal sill.
564	23093	2-COR-006 - Corridor	Wall	Decoration/Finish	Poor Finish	Gaps between capping and wall several locations
565	23094	2-COR-006 - Corridor	Door	Door Frame	Damaged	Upper frame rough
566	23095	2-COR-006 - Corridor	Door	Door	Damaged	Protection damaged both doors
567	23096	2-COR-005 - Corridor	Door	Door	Damaged	Protection damaged both doors. Screws missing kick plate
568	23097	2-COR-005 - Corridor	Wall	Decoration/Finish	Poor Finish	Gap above door frame needs filled then decorated
569	23103	2-COR-004 - Corridor	Wall	Decoration/Finish	Poor Finish	Damage above capping
570	23104	2-COR-004 - Corridor	FFE	Outlet	Damaged	Glass broken smoke control
571	23105	2-COR-004 - Corridor	Wall	Grilles	Screw Caps Missing	Screws and caps missing
572	23106	2-COR-004 - Corridor	Door	Door	Dirty	Paint stains
573	23107	2-COR-003 - Corridor	Door	Door	Damaged	Damaged
574	23110	2-COR-003 - Corridor	Wall	Decoration/Finish	Poor Finish	Screw holes. Fill and decorate
575	23111	2-COR-002 - Corridor	Wall	Decoration/Finish	Poor Finish	Gap above capping
576	23112	2-COR-002 - Corridor	Door	Door	Damaged	Door into 003
577	23116	2-COR-002 - Corridor	Wall	Decoration/Finish	Poor Finish	Surrounding doors
578	23419	2-N2-003 - Grab & Go	Wall	Decoration/Finish	Incomplete	See photos
579	23420	2-N2-003 - Grab & Go	Wall	Decoration/Finish	Incomplete	Crack in wall. See photo
580	23421	2-N2-002 - Staff Room	Door	Door	Damaged	See photo
581	23422	2-N2-002 - Staff Room	Door	Door Frame	Damaged	See photo
582	23423	2-N2-002 - Staff Room	Wall	Decoration/Finish	Incomplete	See photo
583	23424	2-N2-002 - Staff Room	Floor Finishes	Vinyl	Incomplete	See photo One area close to domestic plug at door. Other beside cabinets with domestic plug to right.
584	23426	2-N2-002 - Staff Room	Wall	Decoration/Finish	Misc	See photo. Painting needed between worktop and trunking.
585	23429	2-N2-005 - DSR	Ceilings	Extract Vent	Dirty	See photo Really loud noise coming from unit.
586	23430	2-N2-001 - Corridor	Door	Door Frame	Finish	See photo
587	23431	2-N2-001 - Corridor	Wall	Decoration/Finish	Incomplete	See photo
588	20737					Area 1-L1-044 Window handle not working correctly - see attached.
589	22440	1-B1-021 - Single Bed Cubicle 18	Wall	Decoration/Finish	Poor Finish	Poor finish above capping at side of door. See photo
590	21937	1-P1-163 - DSR	Sink	Finish	Damaged	See photo
591	22453	1-B1-023 - Staff Base (1P)	Wall	Decoration/Finish	Poor Finish	Around right side of glazed panel at high level and top of panel at ceiling right hand side
592	22467	1-B1-031 - Open Plan Bay (4 bed)	Wall	Decoration/Finish	Poor Finish	Poor finish at wall and capping for most of the curved wall
593	22538	G-A3-002 - Seminar & Training Room	Wall	Decoration/Finish	Incomplete	Gaps above capping whole room
594	22574	1-B1-038 - Staff Base (1 person)	Floor Finishes	Vinyl	Poor Workmanship	Gaps above capping.

595	23033	1-P1-090 - Dirty Utility	FFE	Panel	Missing	Gaps around pipes in to ups - roses required
596	23852	G-J2-006 - Office	Wall	Decoration/Finish	Incomplete	Decoration around spurs at sink.
597	23853	G-J2-006 - Office	Envelope	Window	Dirty	Window sill dirty and has marks, decoration not good in some parts
598	23855	G-J2-001 - Corridor	Wall	Decoration/Finish	Poor Finish	Decor at wall and architrave. See photos,
599	23856	G-J2-001 - Corridor	Wall	Decoration/Finish	Damaged	Dent in curve wall. Scratch on wall between toilet and store. See photos,
600	23857	G-J2-003 - Prayer / Meditation / Reflection Area	Wall	Decoration/Finish	Damaged	Dent in edge of wall left of doors going out to courtyard. Dent on wall to left wall.
601	23858	G-J2-003 - Prayer / Meditation / Reflection Area	Wall	Decoration/Finish	Poor Finish	Finish around inset shelf. See photo
602	23859	G-J2-003 - Prayer / Meditation / Reflection Area	Envelope	Window	Damaged	Window sill some scratches and dents. See photo
603	23860	G-J2-003 - Prayer / Meditation / Reflection Area	Wall	Decoration/Finish	Damaged	Wall behind seating scratched. See photo
604	23861	G-J2-004 - WCH / Ritual Wash	Door	Architrave	Decorations Incomplete	Paintwork different colours. See photo
605	23862	G-J2-004 - WCH / Ritual Wash	Door	Architrave	Damaged	Below hing damaged near floor.. See photo
606	23863	G-J2-004 - WCH / Ritual Wash	Shower	Fittings	Misc	Drainage needs screws screwed in very high at moment. See photo
607	23864	G-J2-005 - Store	Wall	Decoration/Finish	Damaged	Dents and marks on cabinet wall. See photo
608	23865	G-J2-002 - Interview Room	Door	Architrave	Damaged	Multiple Dents. See photo
609	23866	G-J2-002 - Interview Room	Wall	Decoration/Finish	Poor Finish	Patchy throughout room. See photo
610	23868	G-J2-004 - WCH / Ritual Wash	Wall	Vinyl	Damaged	Screw holes high level at edge of shower vinyl entry end.
611	23872	1-D6-057 - WC (Assist + Changing)	Floor Finishes	Vinyl	Weld Missing	Corner to left of toilet. See photo
612	23948	G-F1-001 - Corridor	Door	Door	Alignment Incorrect	Gaps between fire door and frame to PARU gardens. Photo
613	23873	1-D6-057 - WC (Assist + Changing)	Door	Architrave	Decorations Incomplete	See photo
614	23905	G-F1-051 - Treatment Room	Door	Architrave	Damaged	Damage and Dent in doorframe. See photos
615	23906	G-F1-051 - Treatment Room	Wall	Decoration/Finish	Poor Finish	Poor finish left of door
616	23907	G-F1-052 - Drug Room	Door	Architrave	Damaged	Dents and scratches. See photo
617	23908	G-F1-051 - Treatment Room	Wall	Decoration/Finish	Remove paint	Poor finish around thermostat socket. Between worktop and trunking. Underneath work surface. Patchy all around
618	23909	G-F1-051 - Treatment Room	Floor Finishes	Vinyl	Skirting De-Bonded	Debonding in various places lots of excess glue
619	23912	G-F1-053 - Multi-Disciplinary Office (7 person)	Door	Door Frame	Damaged	Photo
620	23913	G-F1-053 - Multi-Disciplinary Office (7 person)	Wall	Decoration/Finish	Poor Finish	Poor finish in various area example photo
621	23915	G-F1-053 - Multi-Disciplinary Office (7 person)	FFE	Worktop	Fill joints	Several areas of damage to white board
622	23916	G-F1-054 - Laundry Room	Wall	Decoration/Finish	Damaged	Photo
623	23918	G-F1-098 - Corridor	Floor Finishes	Vinyl	Skirting De-Bonded	Poor finish particularly in the corners
624	23919	G-F1-098 - Corridor	Floor Finishes	Vinyl	Damaged	Deep scratch at double door
625	23920	G-F1-098 - Corridor	Door	Door Frame	Finish	Photo example
626	23921	G-F1-050 - Physical Measurement	Door	Architrave	Damaged	Photo
627	23923	G-F1-045 - Multi-Disciplinary Office - ITS (6 person	Wall	Concrete	Damaged	Dent in wall
628	23930	G-F1-039 - Ward Kitchen	Sink	Fittings	Misc	Hot water tap not working
629	23932	G-F1-039 - Ward Kitchen	Wall	Decoration/Finish	Incomplete	Between wall units
630	23934	G-F1-039 - Ward Kitchen	Wall	Decoration/Finish	Poor Finish	Patching in places
631	23937	G-F1-009 - Interview 4	Wall	Plasterboard	Damaged	Line all around room
632	23940	G-F1-009 - Interview 4	Wall	Decoration/Finish	Poor Finish	Poor finish around door frame and sockets
633	23947	G-F1-001 - Corridor	Wall	Decoration/Finish	Incomplete	Incomplete right of 002
634	23949	G-F1-015 - Corridor	Wall	Decoration/Finish	Damaged	Right of wc 040
635	23950	G-F1-016 - Forteviot Multi-Dis.Office (7 person)	Envelope	Window	Damaged	Damage following installation of internal window. Photos
636	23951	G-F1-016 - Forteviot Multi-Dis.Office (7 person)	Wall	Decoration/Finish	Poor Finish	Photo
637	23952	G-F1-015 - Corridor	Door	Architrave	Damaged	Photo
638	23963	G-A1-032 - Sitting Room	Sink	Fittings	Leaking	Leak onto bottom shelf and floor from hydro tap box
639	23966	G-A1-032 - Sitting Room	Door	Door	Damaged	Holes from old blind fitting need filled and new blind fitted

640	23969	G-A1-031 - Body Viewing	Floor Finishes	Vinyl	Weld Missing	Corner weld incomplete under hand wash sink
641	23973	1-P1-158 - Dirty Scope Store	Wall	Decoration/Finish	Poor Finish	Previous inspection red dot issues not addressed
642	23974	1-P1-158 - Dirty Scope Store	Ceilings	Light Fittings	Misc	Seal around fitting - secure fitting tight to ceiling
643	23975	1-P1-110 - Corridor	Door	Signage	Misc	Sign damaged from main corridor
644	23976	1-P1-162 - Staff Reception/Control Base	Door	Door	Damaged	Damage to laminate inside door
645	23977	1-P1-162 - Staff Reception/Control Base	Wall	Facade Glazed	Misc	Framing finish incomplete both sides of glazed panel
646	23978	1-P1-151 - Exit Bay 3	Wall	Protection	Misc	Previous red dot issues not completed
647	23981	1-P1-150 - Corridor	Wall	Decoration/Finish	Incomplete	Improve finish at MJ outside theatre 32
648	23984	1-P1-166A - Corridor	Wall	Decoration/Finish	Incomplete	Paint around glazing panel
649	23985	1-P1-166A - Corridor	Wall	Decoration/Finish	Incomplete	Paint around glazing panel
650	23990	G-A2-004 - Single Bed 19	Wall	Thermostat	Misc	Thermostat surround damaged
651	23992	G-A2-004 - Single Bed 19	Envelope	Window	Dirty	Internal pine window frame paint splashed
652	23993	G-A2-005 - En-suite 19	Door	Door Frame	Finish	Low level RH side poor finish
653	24002	G-A2-010 - En-suite 20	Wall	Decoration/Finish	Poor Finish	LH side of room between we and plastered wall
654	24007	G-A2-041 - Ward Kitchen	Wall	Decoration/Finish	Poor Finish	RH wall low level
655	24009	G-A2-023 - WC - Staff	Wall	Decoration/Finish	Poor Finish	Wall around frame inside room makes with grey paint
656	24011	G-A2-008 - Reception/Touchdown	Wall	Decoration/Finish	Poor Finish	Between column and reception desk poor finish
657	24012	G-A2-008 - Reception/Touchdown	Floor Finishes	Vinyl	Damaged	Cracked vinyl and cove debonded
658	24013	G-A2-008 - Reception/Touchdown	Wall	Thermostat	Damaged	Wall damage around thermostat
659	24017	G-A2-006 - Single Bed 16	Wall	Decoration/Finish	Incomplete	Above slope
660	24018	G-A2-007 - En-suite 16	Floor Finishes	Vinyl	Incomplete	See photo - seal missing at easiclean
661	24024	G-A2-039 - Treatment Room	Wall	Decoration/Finish	Damaged	Damage around thermostat
662	24001	G-A2-009 - Single Bed 20	Wall	Dado	Joint Alignment	Gap LH side of bed head trunking cap
663	23970	G-A1-031 - Body Viewing	Sink	Fittings	Misc	Cold tap not working
664	23953	G-F1-029 - Corridor	Wall	Decoration/Finish	Poor Finish	Poor finish low level around external opp 028
665	23954	G-F1-029 - Corridor	Floor Finishes	Vinyl	Weld Missing	Double doors to small courtyard. Photo both sides
666	23955	G-F1-029 - Corridor	Floor Finishes	Vinyl	Skirting De-Bonded	Left of switch room 095
667	23957	G-F1-029 - Corridor	Door	Door Frame	Damaged	Damage at double doors into dining room
668	23958	G-F1-029 - Corridor	Wall	Plasterboard	Damaged	Right of door into meeting room 4
669	23959	G-F1-001 - Corridor	Wall	Decoration/Finish	Poor Finish	Right of double doors to 035
670	23960	G-F1-001 - Corridor	Floor Finishes	Vinyl	Skirting De-Bonded	Right of double doors to 035
671	23961	G-F1-100 - Lobby	Door	Door	Missing	Missing door number double door from main corridor into F1-100
672	23945	G-F1-062 - Clincal Base - Open Plan	FFE	Data Outlet	Misc	Cable present anti lig risk. Photo
673	23917	G-F1-098 - Corridor	Floor Finishes	Vinyl	Skirting De-Bonded	Debonding
674	23874	G-Q1-152 - Admin Office (4 person)	Wall	Plasterboard	Damaged	Bulging plasterboard and tide marks
675	23875	G-Q1-152 - Admin Office (4 person)	Floor Finishes	Vinyl	Skirting De-Bonded	Skirting debonding. Photo
676	23876	G-Q1-153 - Reception (2 person)	Floor Finishes	Vinyl	Joints Poor	Under reception
677	23877	G-Q1-153 - Reception (2 person)	Ceilings	Plasterboard	Poor Finish	
678	23878	G-Q1-153 - Reception (2 person)	FFE	Worktop	Dirty	Paint on worktop and hatch lid
679	23879	G-Q1-143 - WC - Staff	Door	Door	Missing	No sign
680	23880	G-Q1-143 - WC - Staff	Wall	Decoration/Finish	Damaged	Above coathook
681	23882	G-Q1-149 - Resource Room/Library	Wall	Decoration/Finish	Poor Finish	Poor finish at low level around door frame
682	23883	G-Q1-149 - Resource Room/Library	Wall	Decoration/Finish	Poor Finish	Poor finish under dado
683	23884	G-Q1-148 - Store Room	Wall	Decoration/Finish	Poor Finish	Throughout
684	23886	G-Q1-146 - WC - Staff	Door	Door	Missing	No sign name on door
685	23889	G-Q1-146 - WC - Staff	Wall	Decoration/Finish	Incomplete	Around door frame

686	23890	G-Q1-146 - WC - Staff	Door	Door Frame	Misc	Poor finish
687	23891	G-Q1-142 - Disposal Hold	Floor Finishes	Vinyl	Damaged	Several areas of damage.
688	23892	G-Q1-146 - WC - Staff	Floor Finishes	Vinyl	Joints Poor	Photo
689	23895	G-Q1-023 - Registrars Office (5 desks)	Floor Finishes	Vinyl	Skirting De-Bonded	Photo
690	23896	G-Q1-023 - Registrars Office (5 desks)	Wall	Decoration/Finish	Skirting De-Bonded	Poor finish under dado all around room. See example photo
691	23897	G-Q1-023 - Registrars Office (5 desks)	Wall	Decoration/Finish	Skirting De-Bonded	Under internal window. Photo
692	23898	G-Q1-055 - Meeting Room (6 person)	Door	Door	Finish	Nail holes around glass panel
693	23899	G-Q1-055 - Meeting Room (6 person)	Wall	Decoration/Finish	Poor Finish	Under internal windows. Photo
694	23900	G-Q1-055 - Meeting Room (6 person)	Wall	Decoration/Finish	Poor Finish	Poor finish on four wall and water marks
695	23139	1-P1-031 - Post Anaesthetic Recovery Room	Ceilings	Light Fittings	Faulty	not working,
696	23147	1-P1-028 - Recovery Staff Base	Floor Finishes	Vinyl	Incomplete	Gap in flooring
697	23149	1-P1-134 - Preparation Room 3	Wall	Decoration/Finish	Poor Finish	Paint and seal. Paint around all sockets different tone.
698	23150	1-P1-134 - Preparation Room 3	Wall	Decoration/Finish	Poor Finish	Finish coming off wall
699	23151	1-P1-134 - Preparation Room 3	Floor Finishes	Vinyl	Damaged	Gouge
700	23152	1-P1-136 - Preparation Room 4	Wall	Decoration/Finish	Poor Finish	Finish coming off wall
701	23153	1-P1-136 - Preparation Room 4	Wall	Decoration/Finish	Poor Finish	Patchy paintwork throughout room. Rough to right of sink. Unfinished under worktop
702	23155	1-P1-136 - Preparation Room 4	Ceilings	Plasterboard	Poor Finish	Paint.
703	23156	1-P1-095 - Sterline Supplies Store	FFE	Signage	Missing	Door sign missing. Room is 121 described as store on Zutec.
704	23157	1-P1-095 - Sterline Supplies Store	Ceilings	Plasterboard	Fixings	Seal and clean radiant panel
705	23158	1-P1-095 - Sterline Supplies Store	Wall	Decoration/Finish	Poor Finish	Seal and clean radiant panel
706	23160	1-P1-145 - 1:1	Wall	Decoration/Finish	Poor Finish	See photos finish, dirt, dings.
707	23166	1-L1-026 - WC - WCH (Vistors)	Ceilings	Supply Vent	Damaged	Hatch cover damaged and needs replaced.
708	23161	1-P1-147 - Staff Office (4 person)	Wall	Decoration/Finish	Poor Finish	Gaps above capping
709	23171	1-L1-033 - Dirty Utility	Wall	Decoration/Finish	Damaged	Paint work poor finish.
710	23174	1-L1-023 - Staff Base / Resus Bay	FFE	Panel	Damaged	Touch down damaged
711	23175	1-L1-005 - Intensive Treatment Room	Floor Finishes	Vinyl	Damaged	Capping deboned. Various red dots on wall. Presume access issue since Board using room.
712	23180	1-L1-037 - Interview/Relatives Quiet Room	Floor Finishes	Vinyl	Joints Poor	Poor finish.
713	23182	1-L1-029 - Consult / Exam Room	Floor Finishes	Vinyl	Incomplete	De-bonding.
714	21088	2-L2-143 - Ensuite 1	Door	Door	Damaged	Screw holes on front of door
715	23192	1-L1-060 - Teaching Room	Floor Finishes	Vinyl	Incomplete	Floor box not even.
716	23229	1-G3-002 - On-Call Bed 1	Envelope	Window	Dented	Several dents to window sill
717	23196	1-L1-006 - Single Bed 2 (Adult)	Door	Door Frame	Damaged	Door frame damaged in places.
718	23199	1-L1-007 - En-suite 2	Shower	Fittings	Misc	Screws protruding. Why are you using anti lig screws in this room.
719	23203	1-L1-011 - En-suite 3	Shower	Fittings	Misc	Screws elevated and risk to patient. Why are anti lig screws being used.
720	23207	1-J1-003 - Body Viewing Room	Door	Door	Damaged	Damaged to outside of door at corridor in 2 places
721	23208	1-J1-003 - Body Viewing Room	Wall	Decoration/Finish	Damaged	High level below side of curtain track
722	23210	1-J1-004 - Sitting Room (Bev Bay)	Door	Door	Damaged	Screw holes on both doors above vision panel and chip needs n other side above vision panel on door with handle
723	23212	1-J1-004 - Sitting Room (Bev Bay)	Floor Finishes	Vinyl	Damaged	Several scratches to vinyl
724	23213	1-J1-002 - WC - WCH	Door	Architrave	Damaged	Several chips/dents on outer side
725	23214	1-J1-002 - WC - WCH	Wall	Decoration/Finish	Poor Finish	Poor finish on wall with hooks, looks rough
726	23219	1-J1-001 - Lobby	Floor Finishes	Vinyl	Damaged	Several scratches to vinyl
727	23222	1-G3-001 - Corridor	Floor Finishes	Vinyl	Damaged	Damage to flooring outside Node room
728	23224	1-G3-001 - Corridor	Floor Finishes	Vinyl	Skirting De-Bonded	Side of node room door I-N12
729	23225	1-G3-008 - Mini Kitchen	Floor Finishes	Vinyl	Poor Workmanship	Poor finish along top of capping. See photo as example
730	23230	1-G3-002 - On-Call Bed 1	Floor Finishes	Vinyl	Damaged	Scratch near door

731	23231	1-G3-004 - On-Call Bed 2	Floor Finishes	Vinyl	Damaged	Scratch near door
732	23125	1-P1-038 - Satellite Pharmacy Store	FFE	Outlet	Damaged	Damage to trunking.
733	23126	1-P1-039 - Preparation Room 1	Wall	Decoration/Finish	Poor Finish	Poor finish all around door. Different paint tone around switches. Patches of different paint.
734	23127	1-P1-039 - Preparation Room 1	Wall	Decoration/Finish	Poor Finish	Poor finish all around door. Different paint tone around switches. Patches of different paint. Capping gaps and not stuck to walls in places
735	23130	1-P1-039 - Preparation Room 1	Floor Finishes	Vinyl	Damaged	Chips in floor
736	23131	1-P1-045 - Preparation Room 2	Wall	Decoration/Finish	Poor Finish	Paintwork patchy throughout room. Different shades. Gaps in mastic at side of sink. Gaps in capping throughout room. Pencil marks on unpainted wood
737	23132	1-P1-045 - Preparation Room 2	Door	Door Frame	Finish	Poor finish
738	23133	1-P1-037 - Corridor	Door	Door Frame	Finish	Gloss thin and patchy overall. Small holes in finish. Damage to bottom right.
739	23134	1-P1-037 - Corridor	Wall	Decoration/Finish	Poor Finish	Poor finish on walls around door. Under ceiling, next to 039,
740	23135	1-P1-037 - Corridor	Wall	Protection	Misc	Gap around protection.
741	23136	1-P1-031 - Post Anaesthetic Recovery Room	Wall	Decoration/Finish	Poor Finish	Finish around door, tideline around all walls
742	23137	1-P1-031 - Post Anaesthetic Recovery Room	FFE	Panel	Missing	Shroud cover missing
743	23138	1-P1-031 - Post Anaesthetic Recovery Room	Wall	Switches	Misc	Wall light switch not working,
744	23140	1-P1-030 - Post Anaesthetic Recovery Room	Wall	Switches	Misc	Wall light switch not working,
745	23141	1-P1-031 - Post Anaesthetic Recovery Room	Wall	Decoration/Finish	Poor Finish	tideline around all walls
746	23142	1-P1-029 - Post Anaesthetic Recovery	Ceilings	Light Fittings	Faulty	Several lights not working
747	23232	1-G3-006 - On-Call Bed 3	Floor Finishes	Vinyl	Damaged	Scratch near door
748	23237	1-G3-004 - On-Call Bed 2	FFE	Signage	Damaged	Sign damaged
749	23239	1-G3-004 - On-Call Bed 2	Floor Finishes	Vinyl	Skirting De-Bonded	In corners of room
750	23242	1-G3-005 - En-suite 2	Sink	Finish	Marked	Other side to tap
751	23243	1-G3-006 - On-Call Bed 3	Floor Finishes	Vinyl	Lifting	Lifting at middle joint
752	23346	1-COR-011 - Corridor	Door	Door Frame	Damaged	Chips to edges of external metal window frames
753	23246	1-G3-006 - On-Call Bed 3	Envelope	Window	Scratched	Metal frame both windows scratched and scrapped. See photo as example
754	23796	G-A2-075A - General Store	Wall	Decoration/Finish	Poor Finish	Please see photos see various photos.
755	23798	G-A2-075A - General Store	Floor Finishes	Vinyl	Damaged	Scratches and gouges in floor
756	23802	G-A2-064 - Equipment Store	Wall	Decoration/Finish	Poor Finish	Please see pictures. Room not finished poor decoration . Red dots still on wall. Finish around plug sockets very poor. Whole room needs redecoration and reviewed.
757	23804	G-A2-011 - TD Base 4	Envelope	Window	Damaged	Please see pictures. Room not finished poor decoration .
758	23805	G-A2-001 - Corridor	Floor Finishes	Vinyl	Damaged	Please see pictures. Scratches and gouges in floor. Floor requires a good buff and clean. Capping debonded.
759	23806	G-A2-080 - DSR	Low Voltage	Lighting	Incomplete	No light incomplete
760	23807	G-A2-083 - Interview	Door	Door Frame	Damaged	Door frame damaged .please see photos and review both sides of door frame.
761	23808	G-A2-083 - Interview	Floor Finishes	Vinyl	Damaged	Please see photo. Floor damaged.
762	23810	G-A2-081 - Clinical Co-ordinators Office (2 person	Wall	Decoration/Finish	Poor Finish	Please see photo. Poor finish under trunking.
763	23812	G-A2-084 - Dirty Utility	Wall	Decoration/Finish	Poor Finish	Please see photo.
764	23813	G-A2-076 - Assisted Bathroom	Floor Finishes	Vinyl	Skirting De-Bonded	Please see photo . Capping debonded.
765	23815	G-A2-069 - TD Base 1	Wall	Switches	Loose	Please see photo. Light switch loose.
766	23817	G-A2-065 - Single Bed 4	Wall	Decoration/Finish	Poor Finish	Poor finish.Please see photo.
767	23819	G-A2-066 - En-suite 2	Door	Door Frame	Fill to hinges	Please see photo
768	23820	G-A2-070 - Single Bed 2	Wall	Switches	Misc	Please see photo. Poor finish around switch?s and wall.
769	23821	G-A2-070 - Single Bed 2	Envelope	Window	Misc	Pin heads coming up.please see photo
770	23822	G-A2-071 - En-suite 2	Wall	Decoration/Finish	Poor Finish	Please see photo. Poor finish
771	23824	G-A2-067 - Single Bed 3	Floor Finishes	Vinyl	Poor Workmanship	Please see photo.Gap between vinyl and capping.
772	23825	G-A2-067 - Single Bed 3	Wall	Decoration/Finish	Poor Finish	Please see photos. Poor finish right hand door frame (corridor). Chip under window and poor paint finish en-suite door.

773	23826	G-A2-068 - En-suite 3	Wall	Decoration/Finish	Poor Finish	Please see photos
774	23827	G-A2-068 - En-suite 3	WC	Fittings	Misc	Please see photo screw missing
775	23829	G-A2-077 - Multi-Disciplinary Office	Floor Finishes	Vinyl	Damaged	Please see photo
776	23831	G-A2-060 - Single Bed 5	Floor Finishes	Vinyl	Damaged	Damaged floor
777	23834	G-A2-061 - En-suite 5	Wall	Decoration/Finish	Misc	Please see picture. Poor decoration both corners.
778	23835	G-A2-061 - En-suite 5	Door	Architrave	Misc	Please see picture . Needs tidying up
779	23837	G-A2-074 - Lobby	Floor Finishes	Vinyl	Misc	Please see pictures. Split vinyl joints. Gouges x6 in floor
780	23839	G-A2-074 - Lobby	Floor Finishes	Vinyl	Misc	Please see pictures. Split vinyl joints. Gouges x6 in floor
781	23840	G-A2-072 - Single Isolation Bedroom 1	Envelope	Window	Misc	Please see pictures . Poor finish See under observation panel and main window.
782	23844	G-A2-050 - Single Bed 8	Floor Finishes	Vinyl	Skirting De-Bonded	Please see photo.
783	23845	G-A2-057 - Corridor	Floor Finishes	Vinyl	Damaged	Please see photo. Glue on vinyl.
784	23846	G-A2-057 - Corridor	Door	Door Frame	Misc	Poor decoration around following door frames. A2=065 / 070/067/
785	23848	G-A2-057 - Corridor	Floor Finishes	Vinyl	Damaged	Please see photo. Glue on vinyl. Gouge outside room 14
786	23849	G-A2-077 - Multi-Disciplinary Office	Wall	Decoration/Finish	Poor Finish	Please see photo. Outside MDT office
787	23162	1-P1-147 - Staff Office (4 person)	Wall	Decoration/Finish	Poor Finish	Unfinished over and under worktop
788	23163	1-P1-143 - Senior Nurse Theatres Office (2 person	Wall	Decoration/Finish	Poor Finish	Unfinished. See photos
789	23169	1-L1-079 - WC - Staff	FFE	Signage	Incorrect	Signage wrong
790	23167	1-L1-026 - WC - WCH (Vistors)	Floor Finishes	Vinyl	Incomplete	Capping damaged and split on corners.
791	23168	1-L1-014 - WC - WCH (Vistors)	FFE	Signage	Incorrect	Signage wrong
792	23255	1-L1-044 - Single Bed 10 (Adult)	Floor Finishes	Vinyl	Damaged	Hole in vinyl
793	23264	1-L1-038 - Single Bed 9 (Adult)	Door	Ironmongery	Adjust Door Closure	Adjust door mechanism
794	23267	1-L1-038 - Single Bed 9 (Adult)	Floor Finishes	Vinyl	Misc	Scratches on floor.
795	23417	2-N2-003 - Grab & Go	Door	Door Frame	Finish	Behind frame at side of door hinges wall mastic and paint not complete
796	23271	1-L1-034 - Single Bed 8 (Adult)	Door	Door	Damaged	See photo Plus door mechanism needs adjusted.
797	23272	1-L1-034 - Single Bed 8 (Adult)	FFE	Mirror	Missing	Mirror missing
798	23274	1-L1-034 - Single Bed 8 (Adult)	Floor Finishes	Vinyl	Damaged	De-bonding in two places.
799	23291	1-D1-033 - Phlebotomy Room	Floor Finishes	Vinyl	Damaged	Joint separating outside room. Photo
800	23294	1-D1-035 - Disposal Hold	Wall	Decoration/Finish	Poor Finish	Poor finish right of wall unit
801	23282	1-L1-017 - Single Bed 5 (Adult)	FFE	Clock	Damaged	Needs replaced.
802	23284	1-L1-018 - En-suite 5	Door	Door	Damaged	Needs screw holes filled.
803	23286	1-L1-018 - En-suite 5	Shower	Fittings	Finish	Screws in shower drainer protruding. Risk to patient.
804	23297	1-D1-031 - Equipment / General Store	FFE	Shelf	alignment	Not fitted properly
805	23300	1-D1-002 - Consult/Examination	Floor Finishes	Vinyl	Damaged	Scratched floor
806	23301	1-D1-002 - Consult/Examination	Floor Finishes	Vinyl	Damaged	Scratched floor
807	23287	1-L1-018 - En-suite 5	Floor Finishes	Vinyl	Damaged	Capping deboned.
808	22829	1-D4-008 - Obs/Control	Door	Door Frame	Misc	Capping to brass screws round door frame and observation window
809	20431	3-K2-053 - Residents Play Room				Window restrictor not secured - see attached.
810	22827	1-D4-008 - Obs/Control	Sink	Finish	Damaged	Damage and staining ? Previous water leak under bottom IPS panel above skirting
811	22825	1-D4-006 - Obs/Control	Door	Ironmongery	Misc	Capping to brass screws door and observation window
812	22557	G-D10-001 - Staff Room	Envelope	Window	Misc	Fill to window frames
813	21205	G-K1-028 - Corridor	Door	Door	Damaged	See photo

814	21209	G-K1-016 - Drop-In Lounge / Beverage Bay	Envelope	Window	Damaged	See photo
815	21587	1-D6-034 - Corridor	Door	Door	Function	Automatic door not opening on person arriving and currently alarming.
816	23340	1-COR-012 - Corridor	Wall	Decoration/Finish	Poor Finish	Around thermostat next to external door and under sills
817	21204	G-K1-028 - Corridor	Door	Door	Function	Automatic access powered door not working and door handles coming loose
818	23341	1-COR-012 - Corridor	Floor Finishes	Vinyl	Damaged	Deep scratch under RH sill for external door
819	20923					G-D1-046 Door - External damage to architrave on both sides. Easiclean sockeissing Paint on hinges Walls - mark LH of colum boxing on RH wall Ceiling - Light fitting to left of basin not sitting down into grid. 3 dirty tiles to the left hand side of the clock Dirty tile to right hand side of column boxing on right hand side wall FFE- Paint on clock. Seal needs refitted at veritical trunking Damage to haffit of wall cupboard. Right hand internal corner
820	23343	1-COR-012 - Corridor	Wall	Decoration/Finish	Damaged	LH low level at door between Cor 012 and 011
821	23348	1-COR-011 - Corridor	Floor Finishes	Vinyl	Damaged	Deep scratch at dry riser outlet outside ward 130 and under video entry to ward 130. Hole under LH door leading to corridor 010
822	23349	1-COR-011 - Corridor	Door	Door	Damaged	Deep scratch on LH door door protection to cor010
823	23352	1-COR-010 - Corridor	Floor Finishes	Vinyl	Damaged	Various scratches outside lifts
824	23355	1-COR-010 - Corridor	Envelope	External Door	Scratched	Door has significant scratches low level and frame incomplete
825	23362	1-COR-010 - Corridor	Door	Door	Damaged	Damaged door protection doors between 010 and 009
826	23416	2-N2-003 - Grab & Go	Door	Door Frame	Damaged	Door frame damaged. See photo
827	23358	1-COR-010 - Corridor	Door	Door	Damaged	LH door outside public lifts, high level
828	23655	B-T1-003 - IT Node Room	Low Voltage	Small Power / Sockets / Spurs etc	Misc	When arriving on site 22/01/19 it was noted that there was no network access on the computers within the Bouygues area. This is the third time this has happened and it has coinsided with the testing of schnider equipment, and also the black start. The RCBO which supplies the power in the cabinet for our IT seems to be tripping when power is restored and thus resulting in loss of power to our cabinet, and subsiquent loss of access to our systems. The circuit has been reset but will need this to be done so everytime we have an outage of power which will have an impact on the area as this is also powering three card readers 1 for the node room and the other 2 for access in to the kitchen which then gives a security concern.
829	23303	1-D1-005 - Consult/Examination	Wall	Decoration/Finish	Poor Finish	Around door frame on external side. See photo
830	23305	1-D1-002 - Consult/Examination	Wall	Decoration/Finish	Incomplete	Incomplete below sockets
831	20988					Pod area - high level internal Poor finishing and decoration around internal column - see attached.
832	23306	1-D1-002 - Consult/Examination	Floor Finishes	Vinyl	Joints Poor	Beside base unit. See photo
833	23307	1-D1-002 - Consult/Examination	Floor Finishes	Vinyl	Skirting De-Bonded	Both sides of ips panel
834	23309	1-D1-002 - Consult/Examination	Floor Finishes	Vinyl	Joints Poor	Joint to wall poor in various places
835	23310	1-D1-002 - Consult/Examination	Wall	Decoration/Finish	Incomplete	Between worktop and trunking
836	23314	1-D1-022 - Consult/Examination (ENT)	Wall	Decoration/Finish	Dirty	Dirty above coat hook
837	23315	1-D1-022 - Consult/Examination (ENT)	Floor Finishes	Vinyl	Skirting De-Bonded	Debonding left of ips and corner below bed head trunking and corner behind door
838	23320	1-D1-018 - Consult/Examination (Ophthalmology)	Wall	Decoration/Finish	Incomplete	Between worktop and trunking
839	23321	1-D1-018 - Consult/Examination (Ophthalmology)	Floor Finishes	Vinyl	Skirting De-Bonded	Starting to debond right of column
840	23322	1-D1-018 - Consult/Examination (Ophthalmology)	Floor Finishes	Vinyl	Joints Poor	Bottom of ips panel split
841	23323	1-D1-030 - Nappy Change	Sink	Finish	Chipped	Photo
842	23325	1-D1-026 - Infant Measuring Room	Sink	Finish	Chipped	Scratched see photo
843	23329	1-D1-007 - Corridor	Door	Door	Missing	Room number disc on outside
844	23330	1-D1-007 - Corridor	Wall	Decoration/Finish	Incomplete	Around door into D1 035
845	23331	1-D1-007 - Corridor	Wall	Decoration/Finish	Poor Finish	Marked in various places and some poor finish
846	23332	1-D1-007 - Corridor	Wall	Protection	Missing	Protection missing from 9 corners
847	23609	1-D7-006 - Dressings Room (Burns)	Door	Kickplates / pushplates	Damaged	Damaged please see photo

848	23610	1-D7-007 - Disposal Hold	Wall	Decoration/Finish	Poor Finish	Poor finish either side of door frame .Door leading from corridor. Also by cupboard. Please see photos
849	23611	1-D7-007 - Disposal Hold	Wall	Decoration/Finish	Poor Finish	Poor finish side of door frame. Please see photos
850	23612	1-D7-007 - Disposal Hold	FFE	Lamp	Missing	Light switches no on or off on them. Please see photo
851	23614	1-D7-001 - Patients' Assisted Bathroom	Wall	Vinyl	Skirting De-Bonded	Poor finish. Please see photo
852	23617	1-D6-002 - Staff Office (39 person)	Door	Signage	Missing	Door number not on door D6 -002 Please see photo
853	23625	1-D6-056 - Corridor	Floor Finishes	Vinyl	Damaged	Gouge in floor outside switch cupboard Please see photo
854	23626	1-D6-056 - Corridor	Wall	Dado	Misc	Wall protection loose Please see photo
855	23630	1-D6-005 - Meeting Room (4 person)	Floor Finishes	Vinyl	Misc	Capping de bonded and painting above under window frame poor Please see photo
856	23631	1-D6-019 - Equipment Decontaimination	Floor Finishes	Vinyl	Misc	Water marks on floor Please see photo
857	23635	1-D1-015 - Play Therapy (inc messy play) Room	Wall	Decoration/Finish	Dirty	Poor finish dirty wall Please see photo
858	23351	1-COR-010 - Corridor	Wall	Decoration/Finish	Damaged	Damaged low level under grille
859	23638	1-D1-016 - Consult/Multi-Disciplinary	Envelope	Window	Misc	Dirty window sill Please see photo
860	23380	1-COR-007 - Corridor	FFE	Cabinet	Damaged	Laminate broken on wall seat adjacent to stained glass and vinyl backrest drawn on with marker pen
861	23639	1-D1-017 - Consult/Examination	FFE	Cabinet	Damaged	Edging split on side of top of cupboard Please see photo
862	23656	2-R1-002 - 1:1	Door	Signage	Incorrect	2-R1-002 has a door identifier on it stating 2-R1-013 which is the Female toilet in the area.
863	23292	1-D1-033 - Phlebotomy Room	Wall	Decoration/Finish	Poor Finish	Poor finish around door
864	23555	1-L1-100 - 4 Bed (Adult)	Floor Finishes	Vinyl	Damaged	Various scratches and breaks in vinyl. Plus bubbles.
865	23564	1-L1-091 - Single Bed 2 (Adult)	Floor Finishes	Vinyl	Misc	Capping debonding close to left side of window.
866	23566	1-L1-091 - Single Bed 2 (Adult)	Floor Finishes	Vinyl	Misc	Several scratches on floor
867	23568	1-L1-092 - Ensuite 2	Floor Finishes	Vinyl	Misc	See photo
868	23641	1-D1-025 - Physical Measurement	Wall	Decoration/Finish	Misc	Height measurement equipment loose Please see photo
869	23659	G-M1-047 - Reception (2 person)	Wall	Decoration/Finish	Incomplete	See photo
870	23660	G-M1-047 - Reception (2 person)	Floor Finishes	Vinyl	Damaged	See photo
871	23661	G-M1-047 - Reception (2 person)	Wall	Decoration/Finish	Damaged	See photo
872	23662	G-M1-047 - Reception (2 person)	Wall	Decoration/Finish	Damaged	See photo
873	23665	G-M1-046 - Medical Records Store	Door	Door Frame	Damaged	See photo
874	23666	G-M1-049 - Interview	Wall	Decoration/Finish	Incomplete	Finished behind door (hinge side) incomplete.
875	23667	G-M1-049 - Interview	Door	Door Frame	Finish	Poor finish.
876	23668	G-M1-049 - Interview	Wall	Decoration/Finish	Damaged	Poor finish.
877	23671	G-M1-042 - Phlebotomy Room	Wall	Decoration/Finish	Poor Finish	See photo
878	23673	G-M1-042 - Phlebotomy Room	Wall	Decoration/Finish	Poor Finish	See photo
879	23675	G-M1-042 - Phlebotomy Room	Floor Finishes	Vinyl	Joints Poor	See photo
880	23677	G-M1-041 - General/Equipment Store	Wall	Decoration/Finish	Damaged	See photo
881	23678	G-M1-040 - Physical Measurement	Wall	Decoration/Finish	Damaged	Popped nail in wall
882	23679	G-M1-039 - WC (acc chg)	Wall	Decoration/Finish	Damaged	Incomplete around total hoist area.
883	23680	G-M1-039 - WC (acc chg)	Floor Finishes	Vinyl	Damaged	See photo
884	23682	G-M1-037 - Clinical/Equip/Stat Store	Low Voltage	Lighting	Misc	Light not working

885	23684	G-M1-036 - Staff Room	Wall	Decoration/Finish	Incomplete	Paint work behind door frame not complete.
886	23685	G-M1-036 - Staff Room	FFE	Clock	Damaged	Clock smashed
887	23686	G-M1-036 - Staff Room	Floor Finishes	Vinyl	Damaged	See photo
888	23688	G-M1-035 - WC Staff	Door	Door Frame	Damaged	See photo
889	23689	G-M1-034 - WC Staff	Door	Door Frame	Damaged	See photo
890	23692	G-M1-029 - Outpatient Management	Door	Door Frame	Damaged	See photo
891	23694	G-M1-028 - Dirty Utility	Floor Finishes	Vinyl	Damaged	See photo
892	23695	G-M1-018 - Consult/Exam	Door	Door Frame	Damaged	See photo
893	23696	G-M1-028 - Dirty Utility	FFE	Cabinet	Misc	Clash between door and work top.
894	23699	G-M1-028 - Dirty Utility	Wall	Decoration/Finish	Damaged	Wall cracked
895	23700	G-M1-028 - Dirty Utility	Ceilings	Light Fittings	Incorrectly Fixed	See photo
896	23701	G-M1-019 - Consult/Exam	Wall	Decoration/Finish	Incomplete	See photo
897	23703	G-M1-020 - Consult/Exam	Door	Door Frame	Damaged	See photo
898	23706	G-M1-021 - Consult/Exam	Door	Door Frame	Damaged	Several ceiling issues.???????
899	23708	G-M1-021 - Consult/Exam	Floor Finishes	Vinyl	Damaged	
900	23709	G-M1-021 - Consult/Exam	Wall	Decoration/Finish	Incomplete	In room. Left side leaf behind hinges wall not finished properly and needs reviewed and painted.
901	23710	G-M1-021 - Consult/Exam	Wall	Decoration/Finish	Incomplete	See photo
902	23713	G-M1-021 - Consult/Exam	FFE	Signage	Damaged	Sign damaged v
903	23715	G-M1-014 - Treatment Room	Wall	Decoration/Finish	Poor Finish	See photo.
904	23716	G-M1-014 - Treatment Room	Containment	Trunking	Misc	See photo. Needs sealed at top plus trunking damaged.
905	23718	G-M1-022 - Consult/Exam	Door	Door Frame	Damaged	See photographs
906	23721	G-M1-022 - Consult/Exam	Wall	Decoration/Finish	Damaged	See photos
907	23722	G-M1-024 - Consult/Exam	Door	Door Frame	Damaged	See photos
908	23725	G-M1-024 - Consult/Exam	Wall	Decoration/Finish	Damaged	See photos plus other dirty marks on walls
909	23726	G-M1-024 - Consult/Exam	Floor Finishes	Vinyl	Damaged	See photos.
910	23728	G-M1-025 - Consult/Exam	Door	Door Frame	Damaged	See photos. Plus inside room behind door with hinges. Paint work terrible.
911	23729	G-M1-025 - Consult/Exam	Floor Finishes	Vinyl	Damaged	See photom
912	23730	G-M1-026 - Corridor	Low Voltage	Small Power / Sockets / Spurs etc	Misc	Plug not aligned.
913	23731	G-M1-030 - Corridor	Wall	Decoration/Finish	Dirty	Outside room 002 main door through to 001. Paint work behind door frames in complete and poor finish
914	23732	G-M1-001 - Corridor	Wall	Decoration/Finish	Damaged	Crack in wall
915	23734	G-M1-001 - Corridor	Floor Finishes	Vinyl	Misc	Manhole cover screws needs tightened. Floor uneven around this area
916	23736	G-M1-048 - Corridor	Wall	Decoration/Finish	Damaged	Large door beside store G M1 041. Behind door frame paint work not finished
917	23738	G-M1-048 - Corridor	Floor Finishes	Vinyl	Damaged	Close to door G-M1-035
918	23740	G-Q1-022 - WC - WCH	Wall	Decoration/Finish	Poor Finish	Poor finish right side surround
919	23741	G-Q1-024 - Dirty Utility	Wall	Decoration/Finish	Poor Finish	Areas of poor finish.
920	23743	G-Q1-030 - GC Admin Office (2 person)	Door	Door Frame	Finish	Poor finish internalexternal
921	23744	G-Q1-030 - GC Admin Office (2 person)	Wall	Decoration/Finish	Poor Finish	Poor finish right internal frame
922	23745	G-Q1-030 - GC Admin Office (2 person)	Wall	Decoration/Finish	Poor Finish	Poor feature wall
923	23746	G-Q1-027 - Cold Waiting 1	Wall	Decoration/Finish	Poor Finish	Poor feature wall
924	23747	G-Q1-027 - Cold Waiting 1	Wall	Decoration/Finish	Poor Finish	Poor above capping
925	23748	G-Q1-026 - Corridor	Floor Finishes	Vinyl	Damaged	Scratched
926	23749	G-Q1-033 - Emergency Shower	Shower	Finish	Misc	Shower does not drain. Pools at back
927	23750	G-Q1-033 - Emergency Shower	Ceilings	Plasterboard	Incomplete	Hole around pipe/ rose required
928	23752	G-Q1-031 - Medical Physics Office (2 person)	Wall	Decoration/Finish	Poor Finish	Various around room.
929	23754	G-Q1-035 - Injection Room 1	Door	Door Frame	Finish	Poor finish
930	23755	G-Q1-035 - Injection Room 1	Wall	Decoration/Finish	Poor Finish	Gap above capping
931	23757	G-Q1-035 - Injection Room 1	Wall	Decoration/Finish	Poor Finish	Poor finish

932	23765	G-Q1-036 - Recovery Area	FFE	Lamp	Misc	Switch on trunking does not operate upright or reading.
933	23766	G-Q1-038 - Corridor	Wall	Decoration/Finish	Poor Finish	Poor finish
934	23767	G-Q1-034 - Hot Waiting 1	Wall	Decoration/Finish	Poor Finish	Poor finish
935	23771	G-Q1-037 - Changing 1	Wall	Decoration/Finish	Poor Finish	Timeline around wall. Poor finish around thermostat
936	23772	G-Q1-037 - Changing 1	Ceilings	Plasterboard	Poor Finish	Gaps around panels/fittings not tight to ceiling
937	23773	G-Q1-028 - Preparation Room	Door	Door Frame	Finish	Poor finish
938	23774	G-Q1-028 - Preparation Room	Wall	Decoration/Finish	Poor Finish	Poor finish
939	23777	G-Q1-025 - Radioactive Waste Store	Wall	Decoration/Finish	Poor Finish	Damaged
940	23778	G-Q1-025 - Radioactive Waste Store	Ceilings	Light Fittings	Incorrectly Fixed	Damaged
941	23779	G-Q1-043 - Changing 2	Wall	Decoration/Finish	Poor Finish	Poor finish
942	23780	G-Q1-047 - Hot Waiting 2	Wall	Decoration/Finish	Poor Finish	Poor finish tide line whole walls
943	23781	G-Q1-047 - Hot Waiting 2	Ceilings	Plasterboard	Poor Finish	Poor finish. Gaps at panels too
944	23782	G-Q1-046 - Stress Room (myocardial work)	Wall	Decoration/Finish	Poor Finish	Tide line round walls. Gap at ceiling. Under bench not finished
945	23784	G-Q1-048 - WC -WCH (Hot) 2	WC	Finish	Misc	Leaking. Significant risk as hot toilet
946	23785	G-Q1-048 - WC -WCH (Hot) 2	Wall	Decoration/Finish	Poor Finish	Rough. Tideline
947	23786	G-Q1-045 - Injection Room 2	Wall	Decoration/Finish	Poor Finish	Rough. Tideline
948	23788	G-Q1-049 - WC (WCH) (Cold)	Wall	Decoration/Finish	Poor Finish	Tide line around room.
949	23789	G-Q1-049 - WC (WCH) (Cold)	WC	Finish	Misc	Leaking
950	23790	G-Q1-050 - Cold Waiting 2	Wall	Decoration/Finish	Poor Finish	Tide line. Rough
951	23792	G-Q1-052 - Counting Laboratory	Wall	Decoration/Finish	Poor Finish	Tide line. Rough
952	23576	1-L1-088 - Single Bed 3 (Adult)	Floor Finishes	Vinyl	Damaged	Various dents in vinyl
953	23579	1-L1-087 - Ensuite 3	Floor Finishes	Vinyl	Skirting De-Bonded	Photo
954	23580	1-L1-105 - Corridor	Wall	Decoration/Finish	Poor Finish	Both sides of staff only door
955	23586	1-L1-105 - Corridor	Floor Finishes	Vinyl	Skirting De-Bonded	Debonding and capping in various places along corridor
956	23588	1-L1-105 - Corridor	Floor Finishes	Vinyl	Poor Workmanship	Poor finish at moment joint near L1 100
957	23590	1-P1-187 - Utility Room 4	Wall	Decoration/Finish	Incomplete	Paint patches in several places
958	23593	1-P1-187 - Utility Room 4	Ceilings	Plasterboard	Poor Finish	Around all ceiling panels fixtures
959	23591	1-P1-187 - Utility Room 4	Floor Finishes	Vinyl	Weld Missing	Welding missing photo
960	23592	1-P1-187 - Utility Room 4	Floor Finishes	Vinyl	Skirting De-Bonded	Debonding at various places. Phoo
961	23595	1-P1-153 - Preparation Room 4	Door	Door Frame	Damaged	Left of door handle Photo
962	23597	1-P1-153 - Preparation Room 4	Floor Finishes	Vinyl	Damaged	Damaged in 7 places see photo example.
963	23598	1-P1-075 - Preparation Room 2	Wall	Decoration/Finish	Poor Finish	Paint patchy in several places
964	23599	1-P1-075 - Preparation Room 2	Sink	Finish	Damaged	Scratches Photo
965	23600	1-P1-075 - Preparation Room 2	Floor Finishes	Vinyl	Damaged	Numerous holes in floor
966	23603	1-P1-079 - Preparation Room 1	Wall	Decoration/Finish	Incomplete	Patchy paint
967	23604	1-P1-079 - Preparation Room 1	Floor Finishes	Vinyl	Damaged	Some small dents in floor
968	23606	1-P1-072 - Preparation Room 3	Floor Finishes	Vinyl	Damaged	Gauges cracks dents and split at joint left of ips panel
969	23535	G-Q1-144 - Female Staff Changing	Wall	Decoration/Finish	Poor Finish	Split. See photo
970	23605	1-P1-079 - Preparation Room 1	Floor Finishes	Vinyl	Damaged	Some small dents in floor
971	23518	G-Q1-015 - Changing	Ceilings	Plasterboard	Poor Finish	Poor finish around outlet and nurse call
972	23642	1-D1-020 - Consult/Examination (Cleft)	Wall	Decoration/Finish	Poor Finish	Poor finish under trunking painting required Please see photo
973	23647	1-D1-013 - Clean Utility	FFE	Cabinet	Misc	Controlled cupboard inside cupboard not removed. Query
974	23648	1-D1-023 - Consult/Examination (ENT)	Wall	Decoration/Finish	Poor Finish	Paint removed when mastic was See photos

975	23650	1-D1-008 - Treatment Room (with prep area)	Wall	Decoration/Finish	Poor Finish	When mastic was applied the paint was removed. Please see picture
976	23652	1-D1-003 - Treatment Room (with prep area)	Wall	Decoration/Finish	Dirty	Dirty wall next to vertical trunking Please see picture
977	23653	1-D1-001 - DSR	Wall	Decoration/Finish	Dirty	Dirty hand mark on wall above danicentre Please see picture
978	23543	G-Q1-150 - Male Staff Changing and Lockers	Door	Door Frame	Damaged	Seal damaged
979	23498	G-Q1-003 - Nappy Change	Wall	Decoration/Finish	Poor Finish	Poor finish round socket plate. Left of ips panel and behind door
980	23499	G-Q1-005 - Changing	Door	Door Frame	Damaged	Door frame small crack
981	23500	G-I1-011 - WC - WCH	Wall	Decoration/Finish	Poor Finish	Poor finish behind door
982	23501	G-I1-011 - WC - WCH	Wall	Decoration/Finish	Poor Finish	Nurse call
983	23502	G-Q1-010 - Ultrasound Room	Wall	Decoration/Finish	Poor Finish	Holes left after whiteboard moved
984	23503	G-I1-011 - WC - WCH	Wall	Decoration/Finish	Poor Finish	Behind door and around nurse call
985	23506	G-Q1-013 - Changing	Wall	Decoration/Finish	Poor Finish	Poor finish around nurse call. Below socket etc.
986	23508	G-Q1-010 - Ultrasound Room	Wall	Switches	Missing	Missing network point at bed head for scanner
987	23510	G-Q1-014 - Ultrasound Room	Door	Door Frame	Finish	Poor finish at vertical door frame. See photo
988	23512	G-Q1-014 - Ultrasound Room	Wall	Decoration/Finish	Finish	Poor finish around HPI panel and right of base unit at low level
989	23511	G-Q1-014 - Ultrasound Room	Wall	Decoration/Finish	Finish	Screw holes remain after moving white board
990	23513	G-Q1-014 - Ultrasound Room	Floor Finishes	Vinyl	Skirting De-Bonded	Below dani centre
991	23514	G-Q1-014 - Ultrasound Room	Wall	Decoration/Finish	Incomplete	Below dado in right hand corner
992	23516	G-Q1-015 - Changing	Wall	Decoration/Finish	Poor Finish	Around dooframes several
993	23517	G-Q1-015 - Changing	Wall	Plasterboard	Poor Finish	Poor plasterboard finish on coat hook wall
994	23519	G-Q1-019 - WC - WCH	Floor Finishes	Vinyl	Damaged	Several scratches on floor
995	23520	G-Q1-121 - Baby/Infant Feeding	Wall	Decoration/Finish	Poor Finish	Poor finish around sockets; left of ips panel
996	23521	G-Q1-121 - Baby/Infant Feeding	Wall	Decoration/Finish	Poor Finish	Poor finish around the nurse call
997	23522	G-Q1-121 - Baby/Infant Feeding	FFE	Panel	Misc	Paint on ips panel
998	23523	G-Q1-121 - Baby/Infant Feeding	Floor Finishes	Vinyl	Damaged	Scratch at door
999	23525	G-Q1-121 - Baby/Infant Feeding	Wall	Decoration/Finish	Poor Finish	Around coat hook
1000	23526	G-Q1-151 - Consultant Office (5 person)	Wall	Decoration/Finish	Damaged	Damage at ceiling level above white board on white wall
1001	23527	G-Q1-151 - Consultant Office (5 person)	Wall	Plasterboard	Misc	Bulging in plaster board all around room
1002	23532	G-Q1-144 - Female Staff Changing	Wall	Laminate	Verticality	Very uneven and one hole in wall
1003	23556	1-L1-101 - Ensuite	Door	Ironmongery	Damaged	Keeper plus vinyl floor needs reviewed and amended.
1004	23530	G-Q1-144 - Female Staff Changing	Wall	Decoration/Finish	Damaged	Several marks on walls
1005	23534	G-Q1-144 - Female Staff Changing	Floor Finishes	Vinyl	Lifting	Split. See photo
1006	23533	G-Q1-144 - Female Staff Changing	Floor Finishes	Vinyl	Joints Poor	Joints poor in three places. Photo example
1007	23536	G-Q1-009 - Acute Reporting	Wall	Decoration/Finish	Poor Finish	Poor finish all around door frame
1008	23537	G-Q1-009 - Acute Reporting	Wall	Decoration/Finish	Poor Finish	Poor finish all around door frame and sockets
1009	23538	G-Q1-009 - Acute Reporting	Wall	Plasterboard	Poor Finish	Bulges on 2 of the walls
1010	23539	G-Q1-150 - Male Staff Changing and Lockers	Wall	Protection	Misc	Poor finish on wall protection in showers
1011	23541	G-Q1-150 - Male Staff Changing and Lockers	Wall	Decoration/Finish	Poor Finish	Poor finish around fire exit button and entrance to cubicles and around thermostat
1012	23544	G-Q1-150 - Male Staff Changing and Lockers	Floor Finishes	Vinyl	Skirting De-Bonded	Seal damaged
1013	23399	4-Z1-004 - Stair 04				Balustrade damaged/defelcted - see attached photos
1014	23402	4-R1-007 - Meeting Room (4 person)				Crack in glazed unit - see attached photo.
1015	22506	2-L2-034 - Single Bed 5 (Adult)	Ceilings	Suspended Ceilings	Incomplete	Tile not sitting correctly, vent twisted.
1016	21860	G-F1-010 - 1:1	Ceilings	Extract Vent	Misalignment / adjustment req'd	poor finish to trunking - whiterock sleeve ? Patch around sleeve to be taped/filled /decorated
1017	23091	2-COR-006 - Corridor	Wall	Decoration/Finish	Poor Finish	Poor finish.
1018	23088	2-COR-007 - Corridor	Floor Finishes	Vinyl	Incomplete	Not sealed side of public lift. Scuffs on floor at door cor 008.

1019	23087	2-COR-007 - Corridor	Wall	Decoration/Finish	Poor Finish	Poor finish at sides of doors
1020	23086	2-COR-007 - Corridor	Envelope	Window	Misc	Poor finish all internal window sills. Pops and rough.
1021	20671	G-COR-001 - Atrium				Poor finishing - see attached.
1022	20672	G-COR-001 - Atrium				Decoration remedials to slatted timber soffit - see attached.
1023	22310	1-B1-010 - Cylinder Store	Door	Door Frame	Misc	Poor mitres at top of frame.
1024	23432	2-N2-001 - Corridor	Floor Finishes	Vinyl	Misc	In several places debonding of capping
1025	23354	1-COR-011 - Corridor	Floor Finishes	Vinyl	Skirting De-Bonded	Under video entry to ward 130
1026	23360	1-COR-010 - Corridor	Floor Finishes	Vinyl	Damaged	Several grudges at doors between 010 and 009
1027	23365	1-COR-007 - Corridor	Door	Door	Damaged	High level veneer separated, RH door to Cor 009
1028	23367	1-COR-007 - Corridor	Floor Finishes	Vinyl	Skirting De-Bonded	LH side of doors to theatre
1029	23368	1-COR-007 - Corridor	Floor Finishes	Vinyl	Damaged	Outside doors to theatre across whole corridor
1030	23375	1-COR-007 - Corridor	Door	Signage	Missing	Riser door 007 and 008 missing FD signs
1031	23382	1-COR-007 - Corridor	Floor Finishes	Vinyl	Damaged	Scratches outside theatre doors 1p1-110 and all along corridor towards movement joint
1032	23386	1-COR-006 - Corridor	Door	Door	Damaged	Chip to stair door and intumescent strip perished
1033	23387	1-COR-005 - Corridor	FFE	Cabinet	Damaged	Notice board cover damaged
1034	23390	1-COR-004 - Corridor	Floor Finishes	Vinyl	Damaged	Gouges outside evacuation lift
1035	23407	G-A1-020	Wall	Decoration/Finish	Damaged	Crack on feature wall above curtain rail. Please see photo
1036	23408	G-A1-023	Wall	Decoration/Finish	Damaged	Please tidy up above capping Please see photo
1037	23409	G-A1-021	Wall	Decoration/Finish	Damaged	Please see thermostat surround on feature wall
1038	23411	G-A1-009	Door	Door Frame	Misc	Please fill See photo
1039	23412	G-A1-010	Wall	Decoration/Finish	Misc	Please tidy up surround of thermostat.
1040	23484	G-A1-029	Wall	Grilles	Misc	Make good wall and decoration around grilles and then mastic seal required around them
1041	23486	G-A1-029	Floor Finishes	Vinyl	Damaged	Deep scratches near entry from corridor
1042	23487	G-A1-027	Floor Finishes	Vinyl	Weld Missing	See photo
1043	23489	G-A1-027	Floor Finishes	Vinyl	Damaged	Multiple scratches and scuffs at door See photo
1044	23491	G-A1-027	Door	Signage	Damaged	Staff only signs both sides of ambulance entrance damaged See photos
1045	23124	1-P1-038 - Satellite Pharmacy Store	Wall	Decoration/Finish	Poor Finish	Mastic wall/surfaces decoration under trunking. Poor finish right side of door. Dents in same wall. Marks on West wall.
1046	23435	G-M1-002 - Consult/Exam	Door	Door Frame	Finish	See photo Door frame needs sanded and re painted
1047	23437	G-M1-002 - Consult/Exam	Envelope	Window	Misc	Window needs oiled to ease opening.
1048	23438	G-M1-002 - Consult/Exam	Wall	Decoration/Finish	Incomplete	See photo
1049	23439	G-M1-002 - Consult/Exam	Envelope	Window	Scratched	See photo
1050	23442	G-M1-003 - Consult/Exam	Wall	Decoration/Finish	Misc	See photos.
1051	23443	G-M1-003 - Consult/Exam	Floor Finishes	Vinyl	Misc	Various scratches on floor
1052	23444	G-M1-007 - Consult/Exam	Wall	Decoration/Finish	Damaged	See photo.
1053	23445	G-M1-007 - Consult/Exam	Floor Finishes	Vinyl	Damaged	See photo.
1054	23446	G-M1-009 - Consult/Exam	Door	Door Frame	Damaged	See photo.
1055	23447	G-M1-009 - Consult/Exam	Wall	Decoration/Finish	Incomplete	See photo.
1056	23448	G-M1-004 - Nurse Base	Wall	Decoration/Finish	Misc	See photo.
1057	23450	G-M1-005 - WC (WCH)	Door	Door Frame	Finish	See photo
1058	23451	G-M1-005 - WC (WCH)	Wall	Decoration/Finish	Incomplete	See photo
1059	23483	G-A1-028	Wall	Grilles	Misc	LH side wall grille needs changed to fixed blade type
1060	23454	G-M1-011 - Consult/Exam	Door	Door Frame	Finish	See photo
1061	23455	G-M1-011 - Consult/Exam	Wall	Decoration/Finish	Misc	See photo Behind door frame paint work not complete.

1062	23459	G-M1-010 - Pre Op Clinic Team Office (3 person)	Door	Door Frame	Damaged	See photo. See photo
1063	23463	G-M1-012 - Consult/Multi-Disciplinary	Wall	Decoration/Finish	Misc	Scratches on wall
1064	23467	G-M1-013 - Consult/Exam	Floor Finishes	Vinyl	Poor Workmanship	See photo. .
1065	23468	G-M1-015 - Consult/Exam	Door	Door Frame	Misc	See photos .
1066	23470	G-M1-015 - Consult/Exam	Floor Finishes	Vinyl	Damaged	See photos .
1067	23471	G-M1-014 - Treatment Room	Wall	Decoration/Finish	Flashing	See photos .
1068	23475	G-M1-014 - Treatment Room	Floor Finishes	Vinyl	Joints Poor	See photon .
1069	23476	G-M1-016 - Clean Utility	Door	Door Frame	Finish	See photo .
1070	23478	G-M1-016 - Clean Utility	Door	Door	Finish	Finish behind internal door hinge side poor .
1071	23481	G-M1-016 - Clean Utility	Door	Door Frame	Finish	See photo .
1072	23410	G-A1-019	Wall	Decoration/Finish	Damaged	Please tidy up around thermostat
1073	23413	G-A1-010	FFE	Door Frame	Misc	Pipes to be removed as per agreement at room review meeting. See photo
1074	23461	G-M1-010 - Pre Op Clinic Team Office (3 person)	Wall	Decoration/Finish	Misc	Pin heads showing through on second window sill. Window close to proximity car parking.
1075	23415	G-A1-008	Ceilings	Plasterboard	Poor Finish	Ensure fittings are tight to ceiling - lights, fan heating panel See photos
1076	23392	1-COR-004 - Corridor	Wall	Grilles	Screw Caps Missing	outside lifts
1077	23393	1-COR-002A - Corridor	Door	Door	Dirty	Riser doors and frames needs attention
1078	23394	1-COR-002A - Corridor	Wall	Decoration/Finish	Poor Finish	Wall above capping needs attention
1079	23395	1-COR-002A - Corridor	Door	Signage	Wrong Location	Remove staff only sign from 1-H2-029 and make good door
1080	23396	1-COR-002B - Corridor	Door	Door Frame	Damaged	Door frame leading to public lifts damaged top right side
1081	23398	B-S6-015 - Contract Manager	Brookfield Multiplex			Condensate pipework from AC unit shattered above ceiling.
1082	23401	4-H1-001 - Corridor				Chip to wall decoration - also marks on door.
1083	23405	3-Z1-004 - Stair 04				Poor standard of decoration to underside of precast stair - see attached.
1084	23145	1-P1-029 - Post Anaesthetic Recovery	Door	Door Frame	Finish	Poor finish door to 024
1085	23143	1-P1-029 - Post Anaesthetic Recovery	Wall	Decoration/Finish	Poor Finish	Finish around vent
1086	22974	3-K2-065 - Family Room 19 (4 person)	Ceilings	Light Fittings	Incorrectly Fixed	Fitted fallen out near door
1087	22661	G-A2-040 - Dining / Play Room	Envelope	Window	Misc	Poor finish internal windows. Examples in pictures.
1088	23109	2-COR-003 - Corridor	Floor Finishes	Vinyl	Damaged	Damaged and incomplete weld
1089	21584	B-S4-001 - Storage/Holding Area	FFE	Outlet	Missing	There is a light switch missing on entry from the internal corridor S4-002.
1090	23090	2-COR-006 - Corridor	Floor Finishes	Vinyl	Damaged	Several deep scratches
1091	23098	2-COR-005 - Corridor	Door	Door	Damaged	Both doors to stair 2 chipped
1092	23101	2-COR-005 - Corridor	Floor Finishes	Vinyl	Damaged	Scratches leading to COR 004
1093	23102	2-COR-004 - Corridor	Floor Finishes	Vinyl	Damaged	Multiple Scratches and gouges
1094	23108	2-COR-003 - Corridor	Door	Signage	Wrong Location	Remove staff only sign and make good
1095	23114	2-COR-002 - Corridor	Door	Door	Missing brush / intumescent strip	Double doors into cor 001brush missing both sides
1096	23115	2-COR-002 - Corridor	Door	Door	Damaged	Double doors into cor 001brush protection damaged

1097	23119	2-COR-001 - Corridor	Wall	Signage	Wrong Location	Remove overhead sign
1098	22511	2-L2-036 - Single Bed 4 (Adult)	FFE	Clock	Damaged	Broken clock
1099	21914	1-P1-176 - Consult/Exam	Wall	Dado	Damaged	Trunking scratches
1100	21945	1-P1-003 - Single Bed 1	Wall	Dado	Damaged	See photos of scratches to bed head trunking
1101	22119	1-H2-021 - Single Bed 1	Wall	Dado	Damaged	Damage to bed head trunking above light switch
1102	22101	1-H2-024 - Single Bed 2	Wall	Dado	Damaged	Numerous scratches to bed head trunking
1103	21082	2-L2-108 - Single Bed 8 (Adult)	FFE	Clock	Damaged	Clock on floor damaged
1104	19897					Generally: Much dust accumulations on and over plant.
1105	21473	2-L2-093 - Ensuite 11	Shower	Fittings	Misc	Floor gully not same as others and is inappropriate as is a health and safety risk as trip hazard
1106	22156	2-L2-048 - Single Bed 2 (Adult)	Door	Door	Misc	This door has clear seal which acts as a seal etc but many doors throughout L2 does not have this. Example 2-L2-041
1107	22357	2-L2-013 - Single Bed 10 (Adult)	Envelope	Window	Damaged	Sill number of screws coming through paintwork. Photo attached
1108	22514	2-L2-023 - Single Bed 15 (Adult)	Wall	Decoration/Finish	Damaged	Vinyl at IPS chipped. See photo
1109	22515	2-L2-028 - Single Bed 16 (Adult)	Door	Architrave	Decorations Incomplete	Corridor side left hand and above. See photo
1110	22518	2-L2-012 - Store	Door	Door	Finish	Door disc hole made. Identifier on other door.
1111	22529	2-L2-041 - Single Bed 18 (Adult)	Envelope	Mastic	Cracked	Both side of window sill. See photo as example.
1112	21475	G-D8-002 - Interview Room	FFE	Panel	Misc	Wooden dado malaligned
1113	21196	G-K1-025 - WC - Wheelchair accessible	Door	Door	Catching on flooring	
1114	22484	2-L2-004 - Single Bed 13 (Adult)	Door	Architrave	Damaged	Poor finish on internal and external lower door frame.
1115	22508	2-L2-020 - Resus Bay	Ceilings	Plasterboard	Damaged	Scratches above Resus sign
1116	22491	2-L2-004 - Single Bed 13 (Adult)	Wall	Decoration/Finish	Misc	Paint work poor.
1117	22513	2-L2-037 - Ensuite 4	Wall	Decoration/Finish	Incomplete	Edge between wall and vinyl on toilet wall needs paint. See photo
1118	22498	2-L2-018 - Single Bed 14 (Adult)	Low Voltage	Lighting	Damaged	Light scratched.
1119	22504	2-L2-034 - Single Bed 5 (Adult)	Low Voltage	Lighting	Incomplete	No lights working in this room.
1120	22509	2-L2-025 - Touchdown Base	Wall	Decoration/Finish	Incomplete	Incomplete under worktop and above trunking See photo
1121	22516	2-L2-028 - Single Bed 16 (Adult)	Wall	IPS Panels	Damaged	See photo
1122	22517	2-L2-028 - Single Bed 16 (Adult)	Wall	Decoration/Finish	Damaged	Dent in wall between entrance and bathroom door.
1123	22527	2-L2-041 - Single Bed 18 (Adult)	Door	Architrave	Damaged	Slightly scratched low level left hand side corridor. See photo
1124	22664	G-A2-040 - Dining / Play Room	FFE	Cabinet	Misc	Cabinet door requires stop.
1125	22531	2-L2-042 - Ensuite 18	Wall	IPS Panels	Damaged	Below sink and top end of mirror. See photo
1126	22533	2-L2-151 - Corridor	Wall	Decoration/Finish	Incomplete	Outside 2-l2-041 left hand side of door. See photo
1127	22554	G-D10-001 - Staff Room	Wall	Decoration/Finish	Poor Finish	Dirty marks on walls
1128	22601	3-H3-011 - Beverage Bay	Sink	Fittings	Misc	Dishwasher present but not fitted.
1129	22658	G-Q1-033 - Emergency Shower	Shower	Fittings	Misc	Water is not draining away from shower. See photos
1130	22659	G-A2-040 - Dining / Play Room	Door	Door Frame	Finish	Poor finish both door frames
1131	22660	G-A2-040 - Dining / Play Room	Wall	Decoration/Finish	Poor Finish	Poor finish around sockets, windows, doors and worktops
1132	22809	1-D3-004 - DSR	Wall	Decoration/Finish	Incomplete	Incomplete finish to right of coat hooks
1133	22812	1-D4-012 - Store	Wall	Decoration/Finish	Brush Marks	Brush marks and popped nail to right behind door
1134	22813	1-D4-004 - Staff Office (8 person)	FFE	Worktop	Damaged	Damage to upstanding to right side of worktop
1135	22826	1-D4-006 - Obs/Control	Wall	Dado	Damaged	Damage to right end of trunking under observation window
1136	22927	Oil Tank 1	Extra Low Voltage	Fire Alarm	Not Wired	Has this coil of red FP200 running from the security access gate junction boxes to behind the external fuel tanks been forgotten about? Presumably it has yetto be installed and terminated at an interface box inside the Energy Centre/ HV Room.
1137	22928	B-S1-012 - Pan Wash	Piped Services	Drainage	Drain Points not installed	Drain has been opened at pipe entry, photo attached.
1138	23001	1-P1-118 - Consult, Exam & Changing	Floor Finishes	Vinyl	Skirting De-Bonded	Skirting left of ps panel
1139	22999	1-P1-119 - Reception (4 person	Wall	Decoration/Finish	Poor Finish	Poor finish above reception desk from inside

1140	20143	4-COR-002 - Corridor				Remove marks / labels from window - see attached.
1141	23002	1-P1-118 - Consult, Exam & Changing	Floor Finishes	Vinyl	Damaged	Split left of IPS panel. See photo
1142	20987					Pod area - high level internal Missing joint / finishing to internal angle - see attached.
1143	22493	2-L2-018 - Single Bed 14 (Adult)	Door	Door Frame	Damaged	Door frame damaged.
1144	22814	1-D4-011 - Corridor	Wall	Decoration/Finish	Damaged	Damage to right side pillar first door.See photo Damage / marks to left of second door. To right of door D4 012 See photo
1145	22469	1-B1-047 - Family Interview Room	Wall	Decoration/Finish	Damaged	Mark on accent wall above light switch
1146	22528	2-L2-041 - Single Bed 18 (Adult)	Wall	Decoration/Finish	Incomplete	Around double socket in bed space. See photo
1147	23000	1-P1-119 - Reception (4 person	Floor Finishes	Vinyl	Skirting De-Bonded	Skirting both sides of pots and opposite corner see photo
1148	21410	3-C1.4-016 - Single Bed 1	FFE	Outlet	Wrong Location	Sockets not in agreed correct location as clash with Medirail, refer to Aconex MPX-GC-020043
1149	21459	3-C1.4-013 - Single Bed 2	FFE	Outlet	Wrong Location	Sockets not in agreed correct location as clash with Medirail, refer to Aconex MPX-GC-020043. Refer to photo for 3-C1.4-016
1150	21461	3-C1.4-018 - Single Bed 2	FFE	Outlet	Wrong Location	Sockets not in agreed correct location as clash with Medirail, refer to Aconex MPX-GC-020043. Refer to photo for 3-C1.4-016
1151	21462	3-C1.4-040 - Isolation Bed 4	FFE	Outlet	Wrong Location	Sockets not in agreed correct location as clash with Medirail, refer to Aconex MPX-GC-020043. Refer to photo for 3-C1.4-016
1152	23004	1-P1-116 - Consult, Exam & Changing	Floor Finishes	Vinyl	Damaged	Scratch. Photo
1153	23005	1-P1-116 - Consult, Exam & Changing	Wall	Decoration/Finish	Poor Finish	Around thermostat and right of ips panel. Photos
1154	23006	1-P1-120 - Consult, Exam & Changing	Wall	Decoration/Finish	Poor Finish	Around thermostat. Photo
1155	23007	1-P1-128 - Admissions Lounge	Floor Finishes	Vinyl	Skirting De-Bonded	Dedonding and poor capping finish all around room
1156	23008	1-P1-128 - Admissions Lounge	Wall	Decoration/Finish	Poor Finish	Poor finish around several sockets
1157	23009	1-P1-128 - Admissions Lounge	Wall	Decoration/Finish	Poor Finish	Very poor finish feature wall. Photo
1158	23010	1-P1-127 - Changing	Door	Door Frame	Damaged	Damage. Photo
1159	23014	1-P1-122 - WC - WCH	Wall	Decoration/Finish	Poor Finish	Poor finish right of door at low level
1160	23011	1-P1-127 - Changing	Wall	Decoration/Finish	Damaged	Around thermostat and above floor capping all around
1161	23012	1-P1-127 - Changing	Ceilings	Plasterboard	Poor Finish	All the ceiling is unfinished
1162	23016	1-P1-099 - Sterile Supplies Store	Floor Finishes	Vinyl	Damaged	Hole in floor
1163	23017	1-P1-083 - 1:1	Door	Signage	Incorrect	Wrong room number should say 083
1164	23018	1-P1-083 - 1:1	Door	Signage	Incorrect	Wrong room number should say 083
1165	23021	1-P1-085 - 1:1	Door	Signage	Incorrect	Disc shoul read room 085
1166	23025	1-P1-089 - Nurse Management Office	Door	Signage	Incorrect	Wrong room number on disc should read 089
1167	23026	1-P1-089 - Nurse Management Office	Wall	Decoration/Finish	Poor Finish	Poor finish around fuse switch. Photo
1168	23029	1-P1-106 - Clean Utility	Floor Finishes	Vinyl	Damaged	Hole in floor. Photo
1169	23032	1-P1-107 - Resus Bay	Ceilings	Plasterboard	Misc	Small crack in plaster. Phoo
1170	23035	1-P1-109 - Recovery (8 bays)	Wall	Decoration/Finish	Incomplete	Finish around all vents incomplete. Photos for example
1171	23036	1-P1-109 - Recovery (8 bays)	Floor Finishes	Vinyl	Damaged	Scratch on floor opposite staff base 113
1172	23037	1-P1-103 - Footwear Machine Washing Area	Floor Finishes	Vinyl	Skirting De-Bonded	Debonding behind external door. Photo
1173	23038	1-P1-100 - Female Staff Changing	Wall	Decoration/Finish	Poor Finish	Poor finish all around door
1174	23039	1-P1-100 - Female Staff Changing	Floor Finishes	Vinyl	Damaged	Hole in floor near hair dryer and mirror. Photo
1175	23045	1-P1-115 - Corridor	Floor Finishes	Vinyl	Damaged	Floor scratched at door opening. Could not open the door to check fitting
1176	22794	1-L1-095 - DSR	FFE	Rack	Missing	bedpan holder missing.
1177	22805	1-L1-069 - Ensuite 5	Wall	Decoration/Finish	Misc	shower panel wrong way d and not acceptable. poor finish.
1178	22807	1-L1-069 - Ensuite 5	FFE	Rail	Misc	two different rails used here. they need to be the same. not acceptable. see photo
1179	22835	1-L1-053 - Multi-Disciplinary Office	Door	Door Frame	Damaged	door edge damaged. and needs repaired.
1180	22929	1-L1-077 - Ensuite	Door	Signage	Wrong Location	door disc number in wrong location should be corner of door above the handle

1181	22930	1-L1-077 - Ensuite	Wall	Vinyl	Damaged	damaged and marked in a number of locations.
1182	22936	1-L1-080 - WC (WCH)	Floor Finishes	Vinyl	Skirting De-Bonded	under mirror and behind door
1183	22947	1-L1-094 - Ensuite 1	Floor Finishes	Vinyl	Skirting De-Bonded	on wall between door and vinyl.
1184	22943	1-L1-093 - Single Bed 1 (Adult)	Floor Finishes	Vinyl	Damaged	scratches on flooring near ensuite
1185	22946	1-L1-094 - Ensuite 1	Wall	Decoration/Finish	Poor Finish	low level screw holes noticeable. wall behind architrave near toile
1186	22799	1-L1-084 - Ensuite 4	Floor Finishes	Vinyl	Skirting De-Bonded	wall next to door and toilet wall
1187	22852	1-L1-099 - Ensuite	Floor Finishes	Vinyl	Damaged	see photo
1188	22521	2-L2-050 - Single Bed 1 (Adult)	Floor Finishes	Vinyl	Damaged	Hole in middle of room and some scratches across flooring.
1189	22490	2-L2-005 - Ensuite 13	Floor Finishes	Vinyl	Misc	Incomplete
1190	22501	2-L2-030 - Dirty Utility	Wall	Decoration/Finish	Incomplete	Paint work poor.
1191	22487	2-L2-004 - Single Bed 13 (Adult)	Wall	Decoration/Finish	Incomplete	Paint removed from wall.
1192	22787	1-L1-046 - Ward Management Office (2 person)	Floor Finishes	Vinyl	Damaged	floor damaged in front of trunking white mark on floor is damage.
1193	22843	1-L1-097 - 4 Bed (Adult)	Floor Finishes	Vinyl	Damaged	various damaged areas in flooring. throughou floor.
1194	22837	1-L1-053 - Multi-Disciplinary Office	Floor Finishes	Vinyl	Damaged	see photo plus capping debonding
1195	22497	2-L2-018 - Single Bed 14 (Adult)	Floor Finishes	Vinyl	Misc	Vinyl cracked.
1196	22543	G-A3-003 - Meeting/Case Conference Room	Wall	Decoration/Finish	Poor Finish	Gaps above capping whole room
1197	22547	G-A3-004 - Lobby	Wall	Decoration/Finish	Poor Finish	Gaps above capping whole room
1198	22833	1-L1-104 - Lobby	Floor Finishes	Vinyl	Misc	debonding of capping behind the door.
1199	22530	2-L2-041 - Single Bed 18 (Adult)	Floor Finishes	Vinyl	Damaged	Left of en-suite door. See photo
1200	22505	2-L2-034 - Single Bed 5 (Adult)	Wall	Decoration/Finish	Incomplete	Damaged paint work at window side.
1201	22565	1-B1-033 - Gowning Lobby Cubicle 10	Wall	Decoration/Finish	Poor Finish	Gaps above capping. Whole room
1202	22797	1-L1-083 - Single Bed 4 (Adult)	Floor Finishes	Vinyl	Damaged	damaged throughout flooring.
1203	22804	1-L1-068 - Single Bed 5 (Adult)	Floor Finishes	Vinyl	Damaged	several scratch marks on floor
1204	22784	1-L1-067 - Ensuite 6	Wall	Vinyl	Bubbled	low level at showerand to right wall vinyl bubbling.
1205	22668	G-A2-021 - Clean Utility	Door	Door Frame	Finish	Poor finish
1206	22669	G-A2-029 - En-suite	Wall	Decoration/Finish	Poor Finish	Poor finish throughout. See pictures.
1207	22670	G-A2-029 - En-suite	Door	Door Frame	Finish	Poor finish throughout.
1208	22671	G-A2-028 - 4 Bed Room	Door	Door Frame	Finish	Poor finish throughout.
1209	22782	1-L1-067 - Ensuite 6	Floor Finishes	Vinyl	Damaged	vinyl around clean easy damaged
1210	22673	G-A2-028 - 4 Bed Room	Wall	Decoration/Finish	Poor Finish	Throughout room. Photo examples
1211	22571	1-B1-039 - Resus Bay	Wall	Decoration/Finish	Poor Finish	Gaps above capping.
1212	22675	G-A2-028 - 4 Bed Room	Envelope	Window	Misc	Poor finish to sill and screws popped. Varnish incomplete.
1213	22678	G-A2-031 - Single Bed 14	Envelope	Window	Misc	Nail pops window sill
1214	22777	1-L1-066 - Single Bed 6 (Adult)	Ceilings	Light Fittings	Misc	lighting poor in room and not all lights coming on with the switches. please review
1215	22680	G-A2-034 - En-suite 13	Wall	Decoration/Finish	Poor Finish	Poor finish
1216	22684	G-A2-019 - Single Bed 22	Envelope	Window	Misc	Nail pops
1217	22683	G-A2-019 - Single Bed 22	Wall	Decoration/Finish	Poor Finish	Around thermostat
1218	22689	G-A2-014 - Single Bed 21	Envelope	Window	Misc	Screws starting to pop on window sill
1219	22696	G-A2-017 - Single Bed 18	Envelope	Window	Misc	Window sill: nail pops mastic dirty
1220	22776	1-L1-001 - Corridor	Wall	Decoration/Finish	Incomplete	near riser 1-t1-012 wall marked, poor finish near door to l1-037.,next to corridor sink low level denton corner. painting patchy between l1-030 l1-031.low level. low down below dispenser at 1-032. and throughout corridor
1221	22774	1-L1-036 - Touchdown Base	FFE	Lamp	Misc	not working. light on touchdown base
1222	22535	2-L2-151 - Corridor	Wall	Decoration/Finish	Incomplete	Various throughout corridor low level above capping. Also paint scraped above protection at double doors. See photo as example.
1223	22775	1-L1-008 - Touchdown Base	Wall	Decoration/Finish	Incomplete	under support wall not filled see photo.
1224	22572	1-B1-034 - Linen Bay	Wall	Decoration/Finish	Poor Finish	Gaps above capping.
1225	22667	G-A2-021 - Clean Utility	Wall	Decoration/Finish	Incomplete	Gaps in capping and wall

1226	22674	G-A2-028 - 4 Bed Room	Wall	Decoration/Finish	Poor Finish	Multiple gaps between capping and wall.
1227	22682	G-A2-019 - Single Bed 22	Wall	Decoration/Finish	Poor Finish	Gaps above capping
1228	22676	G-A2-031 - Single Bed 14	Wall	Decoration/Finish	Poor Finish	Multiple gaps between capping and wall.
1229	22694	G-A2-017 - Single Bed 18	Wall	Decoration/Finish	Poor Finish	Gaps between capping and wall all round room
1230	22697	G-A2-018 - En-suite 18	Wall	Decoration/Finish	Poor Finish	Gaps between capping and wall
1231	22679	G-A2-033 - Single Bed 13	Wall	Decoration/Finish	Poor Finish	Gaps above capping
1232	22770	1-L1-025 - Ensuite 7	Floor Finishes	Vinyl	Damaged	flooring around the y clean is damaged
1233	22768	1-L1-024 - Single Bed 7 (Adult)	Floor Finishes	Vinyl	Weld Missing	see photo corner near ips.
1234	22692	G-A2-015 - En-suite 21	Wall	Decoration/Finish	Poor Finish	Gaps between capping and wall.
1235	22764	1-L1-086A - Storage Equipment	Floor Finishes	Vinyl	Skirting De-Bonded	in room behind door to the right
1236	22759	1-L1-021 - Single Bed 6 (Adult)	Floor Finishes	Vinyl	Damaged	see photo
1237	22693	G-A2-014 - Single Bed 21	Floor Finishes	Vinyl	Damaged	Scratches
1238	22760	1-L1-022 - En-suite 6	Wall	Decoration/Finish	Incomplete	bothsides of architrave unfinished within the en-suite.
1239	22695	G-A2-017 - Single Bed 18	Wall	Decoration/Finish	Poor Finish	See photo
1240	22698	G-A2-018 - En-suite 18	Wall	Decoration/Finish	Poor Finish	Poor finish
1241	22699	1-B1-062 - WC Staff	Door	Signage	Incorrect	Incorrect door number it should be B1-062 not B1-082 Please see photo
1242	22700	1-B1-062 - WC Staff	Floor Finishes	Vinyl	Skirting De-Bonded	Capping coming away from wall. Please see photo
1243	22709	1-B1-045 - Quiet / Interview Room	Floor Finishes	Vinyl	Misc	Bubble in wall that is affecting flooring Please see picture
1244	22714	1-B1-072 - Play Specialist Base & Store	Sink	Fittings	Leaking	Please see photo
1245	22715	1-B1-073 - Pantry / Milk Store	Floor Finishes	Vinyl	Damaged	Please see photo
1246	22716	1-B1-073 - Pantry / Milk Store	Floor Finishes	Vinyl	Skirting De-Bonded	Please see photo
1247	22731	1-B1-074 - Ensuite	Shower	Fittings	Misc	Screws in gulley not flush Please see photo.
1248	22732	1-B1-065 - Open Plan Bay (3 cots)	Floor Finishes	Vinyl	Skirting De-Bonded	Capping debonded Please see photo.
1249	22737	1-B1-076 - Corridor	Wall	Decoration/Finish	Poor Finish	Please see photo.
1250	22738	1-B1-076 - Corridor	Floor Finishes	Vinyl	Damaged	Scratches on floor Please see photo.
1251	22739	1-B1-083 - Ensuite 2	Shower	Fittings	Misc	Screws not flush Please see photo.
1252	22743	1-B1-082 - Relatives O/N Stay 2	Door	Signage	Incorrect	Door signage in correct should be 082 not 062 Please see photo
1253	22744	1-B1-079 - Ensuite 1	Shower	Fittings	Misc	Screws not flush Please see photo
1254	22745	1-B1-079 - Ensuite 1	Floor Finishes	Vinyl	Skirting De-Bonded	Please see photo
1255	22651	3-H3-015 - Meeting Room	FFE	Data Outlet	Dirty	Data outlet not labelled in one floor box. All floor boxes very dirty
1256	9610	2-PLANT-001 - Theatre Plant Room	Containment	Trunking	Lid not fixed on correctly	Lid not fitted to trunking above LP DB 20.
1257	22441	1-B1-021 - Single Bed Cubicle 18	Wall	Decoration/Finish	Damaged	Damage to left window sill and marks on right sill See photos
1258	22442	1-B1-027 - Clean Utility	Wall	Decoration/Finish	Damaged	Damage to side of first column See photo
1259	22443	1-B1-027 - Clean Utility	Floor Finishes	Vinyl	Weld Missing	Missing weld under full height cupboard. See photo
1260	22445	1-B1-025 - Gowning Lobby Cubicle 15	Wall	Glazed Partition	Damaged	Damaged under glazed partition and damage to top of partition and side
1261	22444	1-B1-029 - Dirty Utility	Floor Finishes	Vinyl	Lifting	See red dot. See photo
1262	22447	1-B1-026 - Single Bed Isolation Cubicle 15	Wall	Decoration/Finish	Poor Finish	Poor finish around BMS
1263	22449	1-B1-026 - Single Bed Isolation Cubicle 15	Door	Architrave	Damaged	Several chips to inner frame

1264	22451	1-B1-023 - Staff Base (1P)	Floor Finishes	Vinyl	Damaged	Hole in vinyl under desk at service pipes
1265	22452	1-B1-023 - Staff Base (1P)	Wall	Decoration/Finish	Poor Finish	Around nurse call panel and left light switch
1266	22458	1-B1-052 - Corridor	Wall	Decoration/Finish	Poor Finish	Poor finish at low level both sides of door of 1-B1-025 and around press to exit button at 1-B1-013B
1267	22459	1-B1-052 - Corridor	Floor Finishes	Vinyl	Skirting De-Bonded	At side of door 1-B1-013B
1268	22456	1-B1-052 - Corridor	Door	Door	Damaged	Scratches on metal trim several areas. See photo as example
1269	22466	1-B1-031 - Open Plan Bay (4 bed)	Wall	Decoration/Finish	Poor Finish	Poor finish both sides of double door leading to corridor 1-B1-071 at low level
1270	22457	1-B1-052 - Corridor	Door	Door Frame	Damaged	Damage upper frame . See photo
1271	22461	1-B1-031 - Open Plan Bay (4 bed)	Wall	Decoration/Finish	Poor Finish	Between worktop and dado
1272	22463	1-B1-031 - Open Plan Bay (4 bed)	Floor Finishes	Vinyl	Poor Workmanship	Poor finish at top of capping and starting to debond at corner
1273	22464	1-B1-031 - Open Plan Bay (4 bed)	Wall	Decoration/Finish	Poor Finish	Poor finish around EBB panels and damage at bottom of same column
1274	22470	1-B1-047 - Family Interview Room	Floor Finishes	Vinyl	Skirting De-Bonded	Starting to debond at side of wall behind door
1275	22489	2-L2-004 - Single Bed 13 (Adult)	Floor Finishes	Vinyl	Misc	Capping coming away from wall.
1276	22486	2-L2-004 - Single Bed 13 (Adult)	Wall	IPS Panels	Damaged	Scratches on IPS panel under towel dispenser.
1277	22472	1-B1-048 - On-Call Consultant Office (2 person)	Wall	Decoration/Finish	Poor Finish	Poor finish around light switch and dent to wall left of coat hooks
1278	22475	B1-051 - Data Manager/Secretarial Office (3 perso	Door	Door Frame	Damaged	Several chips to inner frame See photo as example
1279	22477	B1-051 - Data Manager/Secretarial Office (3 perso	Envelope	Window	Misc	Window sill very rough
1280	22479	1-B1-055 - Waiting Area (Vistors)	Envelope	Window	Damaged	Window sill damaged in several areas
1281	22480	1-B1-055 - Waiting Area (Vistors)	Wall	Decoration/Finish	Damaged	Poor finish/damage low level under socket and also at side of cupboard
1282	22485	2-L2-004 - Single Bed 13 (Adult)	Wall	Decoration/Finish	Incomplete	Rough around door fixing
1283	22483	1-B1-056 - WC - WCH	Wall	Decoration/Finish	Poor Finish	Poor finish at side of door and also mark above nurse call paneln
1284	22534	2-L2-151 - Corridor	Wall	Signage	Misc	Outside 2-I2-041 please move sign to be more in line with the room it relates to. See photo
1285	22537	G-A3-002 - Seminar & Training Room	Wall	Decoration/Finish	Incomplete	Poor finish around switches
1286	22540	G-A3-002 - Seminar & Training Room	Wall	Decoration/Finish	Poor Finish	Tide line on wall
1287	22542	G-A3-003 - Meeting/Case Conference Room	Wall	Decoration/Finish	Poor Finish	Around notice board.
1288	22544	G-A3-003 - Meeting/Case Conference Room	Wall	Decoration/Finish	Poor Finish	See photo
1289	22545	G-A3-003 - Meeting/Case Conference Room	Wall	Decoration/Finish	Poor Finish	Around switches
1290	22546	G-A3-004 - Lobby	Wall	Decoration/Finish	Poor Finish	Not finished and tide marks
1291	22548	G-A3-004 - Lobby	Wall	Decoration/Finish	Poor Finish	Around all switches
1292	22549	G-A3-004 - Lobby	Wall	Decoration/Finish	Poor Finish	Both sides door surround
1293	22560	1-B1-036 - Single Bed Isolation Cubicle 10	Door	Door	Damaged	Small chip in door
1294	22561	1-B1-036 - Single Bed Isolation Cubicle 10	Envelope	Window	Misc	Finish on internal window both sides. Fill around glass, fill on surround, prominent nail.
1295	22564	1-B1-033 - Gowning Lobby Cubicle 10	Wall	Decoration/Finish	Poor Finish	See photo
1296	22566	1-B1-033 - Gowning Lobby Cubicle 10	Envelope	Window	Misc	Poor finish on sill
1297	22568	1-B1-037 - Single Bed Isolation 9	Wall	Decoration/Finish	Poor Finish	See photo
1298	22569	1-B1-037 - Single Bed Isolation 9	Envelope	Window	Misc	Finish internal windows
1299	22579	1-B1-070 - Corridor	Wall	Decoration/Finish	Poor Finish	Multiple examples poor finish
1300	22580	1-B1-063 - Open Plan Bay (4 beds)	Door	Door Frame	Finish	Chips
1301	22347	2-L2-015 - Single Bed 9 (Adult)	FFE	Clock	Missing	No clock in room
1302	22356	2-L2-013 - Single Bed 10 (Adult)	FFE	Clock	Missing	
1303	22581	1-B1-063 - Open Plan Bay (4 beds)	Wall	Decoration/Finish	Poor Finish	Multiple examples poor finish
1304	22582	1-B1-063 - Open Plan Bay (4 beds)	Floor Finishes	Vinyl	Incomplete	See photo
1305	22583	1-B1-063 - Open Plan Bay (4 beds)	Wall	Decoration/Finish	Poor Finish	Multiple examples poor finish
1306	22584	1-B1-032 - Patients' Assisted Shower	Wall	Decoration/Finish	Poor Finish	poor finish
1307	22587	1-B1-032 - Patients' Assisted Shower	Wall	Decoration/Finish	Poor Finish	poor finish
1308	22588	1-B1-041 - Clean Utility	Door	Door	Damaged	See photo gap
1309	22589	1-B1-041 - Clean Utility	Door	Door Frame	Damaged	See photo gap
1310	22591	1-B1-042 - Multidisplinary Work Area HDU	Door	Door Frame	Damaged	And unfinished.

1311	22592	1-B1-042 - Multidisplinary Work Area HDU	Door	Door Frame	Damaged	Multiple poor finish.
1312	22303	1-B1-005 - WC - Staff	WC	Fittings	Damaged	Chip to front of toilet pan
1313	21586		Door	Door	Damaged	Door set has been replaced and surrounding frame has not been finished off.
1314	21755	2-L2-057 - Multi-Disciplinary Office	FFE	Board	Misc	Light switch finish poor
1315	21756	2-L2-057 - Multi-Disciplinary Office	FFE	Board	Misc	Light switch finish poor
1316	21787	2-L2-045 - Touchdown Base	FFE	Lamp	Misc	See photo
1317	20641	B-S1-009 - F Staff Changing/Shower				Damage to door - see attached.
1318	20645	B-S1-010 - M Staff Changing/Shower				Door fouling on lockers - see attached. Fit door stop
1319	21038	3-C1.8-014 - Clean Utility	Ceilings	Light Fittings	Misalignment / adjustment req'd	Needs aligned with ceiling
1320	21011	2-M2-002 - Staff Office				All paint issues Door - External and internal door frame, needs reviewd and made good Rough finish above door. Walls - finish around BMS, thermostat and light switch needs painted. North Wall unfinished where mastic not finished. West Wall unfinished where mastic missing Paint between dado rail and workbench needs made good Floor Scuffs and light scratches over floor FFE - window won't close
1321	22422	1-D6-020 - Dietetic Clinic Room	FFE	Cabinet	Misc	Door stop required
1322	21173	G-K1-004 - Office 6 (4 person)	FFE	Cabinet	Damaged	See photo of unit at wall window
1323	21089	2-L2-143 - Ensuite 1	FFE	Signage	Wrong Location	Signs on wrong side of door and toilet sign damaged
1324	21458	3-C1.4-067 - WC (A) (V)	Door	Door Frame	Damaged	Outer frame damaged
1325	21505	3-C1.3-034 - Ward Kitchen	Piped Services	Chilled Water	Misc	Hydro tap unit not in correct orientation
1326	22291	1-B1-001 - Corridor	Door	Door	Misc	Door protection bashed LH door leading onto hospital street corridor
1327	22411	1-D6-029 - Treatment Room (Physio)	FFE	Cabinet	Missing	Door stops required for cupboard doors. See photo
1328	21585	B-S4-001 - Storage/Holding Area	Door	Door	Damaged	The doors to corridor B cor 010 have the wires exposed.
1329	22394	1-B1-025 - Gowning Lobby Cubicle 15	Ceilings	Supply Vent	Damaged	Damage and dirt round ceiling hatches
1330	22099	1-H2-024 - Single Bed 2	Envelope	Window	Damaged	Damage on window sill and mastic needs attention
1331	20302		Door	Ironmongery	Damaged	The seperation between HV/LV partitions of this room is obtained by a cage. The cage door locking device is fitted witha glass emergency breakglass. The glass element within the device is broken. Can all such segregation cages be checked and the relevant break glass elements that are brokenreplaced for unbroken elements please.
1332	21106	2-L2-084 - Single Bed 12 (Adult)	Door	Ironmongery	Misc	Easy clean not working
1333	21101	2-L2-082 - Single Bed 13 (Adult)	Door	Ironmongery	Misc	Easy clean incomplete and not fitted properly
1334	21191	G-K1-018 - WC - Staff	Wall	IPS Panels	Poor Joints	See photo. Mastic coming away
1335	21720	3-C1.2-022 - Touchdown Base 2	FFE	Worktop	Misc	Tidying cabling under worktop See photo
1336	22360	2-L2-014 - Ensuite 10	Wall	IPS Panels	Fixing Holes Visible	See photo
1337	21110	2-L2-066 - WC - Staff	Wall	Decoration/Finish	Poor Finish	Poor finish lower wall right of WC
1338	21108	2-L2-078 - Ward Kitchen	Wall	Decoration/Finish	Damaged	Paint peeled from wall beside high socket
1339	21104	2-L2-001 - Corridor	Wall	Decoration/Finish	Damaged	Damage under bumper by disposal hold
1340	21102	2-L2-001 - Corridor	Wall	Decoration/Finish	Poor Finish	Poor finish around OUT005 by entrance door
1341	21099	2-L2-082 - Single Bed 13 (Adult)	Wall	Decoration/Finish	Pinholes	Pinhead visible
1342	21080	2-L2-106 - Single Bed 9 (Adult)	Wall	Decoration/Finish	Damaged	Crack on wall beside curtain rail
1343	21087	2-L2-142 - Single Bed 1 (Adult)	Wall	Decoration/Finish	Damaged	Accent wall below sockets damage
1344	21090	2-L2-143 - Ensuite 1	Wall	Decoration/Finish	Poor Finish	Poor finish at top of wall to ceiling on WC wall
1345	21095	2-L2-118 - Ensuite 7	Wall	Decoration/Finish	Poor Finish	Poor finish around thermostat
1346	21163	G-K1-002 - Meeting Room (family size)	Wall	Decoration/Finish	Poor Finish	See photo of curved wall different shades of white
1347	21166	G-K1-002 - Meeting Room (family size)	Wall	Decoration/Finish	Poor Finish	See photon

1348	21167	G-K1-002 - Meeting Room (family size)	Wall	Decoration/Finish	Damaged	See photo of window sill
1349	21169	G-K1-008 - WC - Wheelchair accessible	Wall	Decoration/Finish	Poor Finish	See photo at side of door frame
1350	21174	G-K1-004 - Office 6 (4 person)	Wall	Decoration/Finish	Poor Finish	See photo
1351	21178	G-K1-013 - Store	Wall	Decoration/Finish	Poor Finish	See photos
1352	21180	G-K1-005 - Office 2 (3 person)	Wall	Decoration/Finish	Poor Finish	See photo
1353	21182	G-K1-010 - Interview Room	Wall	Decoration/Finish	Poor Finish	See photo
1354	21184	G-K1-015 - Interview Room	Wall	Decoration/Finish	Screw Visible	See photo
1355	21186	G-K1-011 - Office 3 (2 person)	Wall	Decoration/Finish	Poor Finish	See photo
1356	21188	G-K1-021 - Complementary Therapy Room	Wall	Decoration/Finish	Poor Finish	See photo
1357	21189	G-K1-021 - Complementary Therapy Room	Wall	Decoration/Finish	Poor Finish	See photo
1358	21190	G-K1-018 - WC - Staff	Wall	Decoration/Finish	Poor Finish	See photos of sink wall. Paint also patchy to left of sink
1359	21195	G-K1-009 - Corridor	Wall	Decoration/Finish	Damaged	Wall beside Switch cupboard G-K1-027 marked
1360	21197	G-K1-024 - Office 4 (2 person)	Wall	Decoration/Finish	Misc	Mastic above worktop poor finish
1361	21203	G-K1-028 - Corridor	Wall	Decoration/Finish	Damaged	See photo
1362	21207	G-K1-016 - Drop-In Lounge / Beverage Bay	Wall	Decoration/Finish	Poor Finish	Poor finish at join of ceiling trim to wall at partition wall
1363	21230	G-D5-010 - Surgery (standard)	Wall	Decoration/Finish	Poor Finish	Rough on side of colunm Damage in front of other sink please see photo.
1364	21474	G-D8-002 - Interview Room	Wall	Decoration/Finish	Poor Finish	Poor finish on window sill
1365	21477	G-D8-001 - Open Plan Office	Wall	Decoration/Finish	Dirty	Dirty mark above trunking
1366	21752	2-L2-057 - Multi-Disciplinary Office	Wall	Decoration/Finish	Incomplete	Seal incomplete
1367	21780	2-L2-043 - Single Bed 19 (Adult)	Wall	Decoration/Finish	Misc	Curtain track off centre
1368	21764	2-L2-146 - Corridor	Wall	Decoration/Finish	Misc	Capping poor in various locations
1369	21759	2-L2-060 - WC (A)	Door	Door Frame	Damaged	Chips to door frame
1370	21742	2-L2-068 - WC - WCH	Wall	Decoration/Finish	Poor Finish	Mastic wall to ceiling rough
1371	21244	G-D5-005 - Dirty Utility	Wall	Decoration/Finish	Poor Finish	See photo mastic required trim below sink.
1372	21238	G-D5-007 - Recovery	Wall	Decoration/Finish	Poor Finish	Both sides of sill require mastic and mastic to back of sill dirty and poor finish.
1373	21858	G-F1-043 - WC (Staff)	Door	Door Frame	Finish	Finish round door frame on inside has significant gaps.
1374	21905	1-P1-180 - WC - WCH	Door	Door Frame	Fill to hinges	See photo
1375	21906	1-P1-179 - WC - WCH	Wall	Decoration/Finish	Poor Finish	Poorly finished/ scuffed See photo for examples
1376	21925	1-P1-175 - Reception (2 person)	Wall	Decoration/Finish	Poor Finish	See photo
1377	22006	1-P1-022 - Clean Utility	Door	Door Frame	Mastic	Mastic required around bottom of door frame
1378	21962	1-P1-011 - Ensuite 3	Door	Decoration/Finish	Poor Finish	Poor finish at side of door frame and seal required at both sides of frame at floor
1379	21826	G-D1-008 - Plaster Suite (3 bays)	Wall	Decoration/Finish	Incomplete	See photo. Above wall cabinets behind the door

1380	21801	G-D1-040 - Consult/Multi-Disciplinary	Wall	Decoration/Finish	Incomplete	See photo. Between worktop and trunking Damage in front of other sink please see photo.
1381	21975	1-P1-013 - WC - WCH	Door	Door Frame	Mastic	Bottom of frame not sealed at floor both sides
1382	21836	G-D1-017 - Corridor	Wall	Decoration/Finish	Incomplete	See photo. Domestic socket near double doors to
1383	22058	1-H2-002 - Waiting / Play	Wall	Decoration/Finish	Poor Finish	See photo. Poor finish mastic at windowsill edge
1384	22027	G-A1-049 - St Shw (A)	Door	Door Frame	Mastic	LH architrave not sealed at low level
1385	22163	2-L2-046 - Single Bed 3 (Adult)	Door	Door Frame	Damaged	Damage to upper outside woodwork and inside fire seal.
1386	22165	2-L2-047 - Ensuite 3	Door	Door Frame	Finish	No mastic on door.
1387	22268	1-D6-062 - Corridor	Door	Door Frame	Mastic	Mastic missing both sides of frame
1388	22294	1-B1-060 - Seminar Room	Wall	Decoration/Finish	Incomplete	High level issues at top of first column LH side of room
1389	22333	1-B1-020 - Single Bed Cubicle 16	Wall	Decoration/Finish	Poor Finish	RH column overlaps flooring
1390	22339	2-L2-145 - Corridor	Wall	Decoration/Finish	Screw Visible	Screw protruding significantly high level above dani centre
1391	22363	2-L2-008 - Hoist Bay	Wall	Decoration/Finish	Dirty	Back wall has cement splashes. See photo
1392	22374	2-L2-033 - Ensuite 6	Wall	Decoration/Finish	Incomplete	Edging between wall and vinyl wall to shower poor.
1393	22375	2-L2-033 - Ensuite 6	Wall	Decoration/Finish	Dirty	Marks on wall vinyl/mastic. High level see photo.
1394	21119	2-L2-065 - WC - Staff	Wall	Decoration/Finish	Incomplete	Mastic at top of WC wall not done
1395	21751	2-L2-057 - Multi-Disciplinary Office	Wall	Decoration/Finish	Incomplete	Seal incomplete
1396	21113	2-L2-066 - WC - Staff	Floor Finishes	Vinyl	Incomplete	Capping coming away from wall left of door
1397	21105	2-L2-084 - Single Bed 12 (Adult)	Floor Finishes	Vinyl	Damaged	Damaged from floor stop being relocated
1398	21103	2-L2-001 - Corridor	Floor Finishes	Vinyl	Joints Poor	Poor workmanship at corner joints by entrance door in 2 places
1399	21098	2-L2-082 - Single Bed 13 (Adult)	Floor Finishes	Vinyl	Damaged	Damage from where door stops were moved
1400	21078	2-L2-139 - Single Bed 15 (Adult)	Floor Finishes	Vinyl	Damaged	Damage in 2 places where door stop has been moved
1401	21085	2-L2-127 - Dirty Utility	Floor Finishes	Vinyl	Skirting De-Bonded	Deboning around column
1402	21092	2-L2-121 - Single Bed 17 (Adult)	Floor Finishes	Vinyl	Poor Workmanship	Poor finish at capping behind en suite door
1403	21093	2-L2-113 - Single Bed 18 (Adult)	Floor Finishes	Vinyl	Poor Workmanship	Poor finish at top of capping at bed bumper
1404	21456	3-C1.4-069 - Reception (1 person)	Floor Finishes	Vinyl	Poor Workmanship	Hole at end of vinyl at wall under worktop
1405	21757	2-L2-054 - Dirty Utility	Wall	Skirting	Poor Joint	poor decs at skirting

1406	21325	G-D1-017B - Corridor	Wall	Decoration/Finish	Damaged	See photo.
1407	22290	1-B1-001 - Corridor	Door	Door	Damaged	Pinhole needs filled where keep shut sign was repositioned
1408	22292	1-B1-007 - Equipment Service Room	Door	Ironmongery	Missing	Easy clean socket missing
1409	22340	2-L2-145 - Corridor	Wall	Decoration/Finish	Screw Visible	Decoration poor finish near Athena panel, and various light cations low level
1410	22314	1-B1-012 - Staff Base	Wall	Decoration/Finish	Poor Finish	Finish round light switches behind base next to video entry phone
1411	22342	2-L2-021 - Single Bed 8 (Adult)	Door	Architrave	Damaged	Damage see photo
1412	22346	2-L2-022 - Ensuite 8	Wall	Decoration/Finish	Poor Finish	Edge poorly finished see photo
1413	22354	2-L2-061 - WC - Staff	Door	Architrave	Damaged	Inside damage. See photo
1414	22369	2-L2-027 - Ensuite 7	Shower	Fittings	Misc	Shower rail dented. See photo
1415	22378	2-L2-010 - Single Bed 11 (Adult)	Envelope	Window	Damaged	Sill paint chipped and screws coming through.
1416	22299	1-B1-003 - Staff Room	Door	Door	Damaged	Door chip above kickplate
1417	22341	2-L2-021 - Single Bed 8 (Adult)	Door	Door	Alignment Incorrect	Door to heavy to open needs adjusted.
1418	22348	2-L2-015 - Single Bed 9 (Adult)	Wall	Decoration/Finish	Incomplete	Finish around light socket poor.
1419	22367	2-L2-026 - Single Bed 7	Wall	Decoration/Finish	Flashing	Uneven joint in wall/ flashing. See photo
1420	22351	2-L2-016 - Ensuite 9	Shower	Finish	Chipped	Hole in wall vinyl low level
1421	22358	2-L2-013 - Single Bed 10 (Adult)	Wall	Decoration/Finish	Incomplete	Corner between mirror and whiteboard. Photo attached
1422	22393	1-B1-025 - Gowning Lobby Cubicle 15	Wall	Decoration/Finish	Dirty	Marks on wall round coat hooks
1423	22395	1-B1-026 - Single Bed Isolation Cubicle 15	Wall	Decoration/Finish	Damaged	Small dent in wall to left of internal window
1424	22406	1-D6-042 - Pantry	Wall	Decoration/Finish	Poor Finish	Poor finish left of splashback
1425	22408	1-D6-042 - Pantry	Wall	Decoration/Finish	Poor Finish	Around cleaners socket and thermostat
1426	22410	1-D6-029 - Treatment Room (Physio)	Wall	Decoration/Finish	Poor Finish	Poor finish around door frame
1427	22412	1-D6-029 - Treatment Room (Physio)	Wall	Decoration/Finish	Misc	Screw popping on wall above whiteboard
1428	22423	1-D6-031 - Dietetic Store	Wall	Decoration/Finish	Incomplete	Plaster and paint not completed down to floor
1429	22365	2-L2-026 - Single Bed 7	Door	Ironmongery	Adjust Keep	Needs aligned
1430	22421	1-D6-020 - Dietetic Clinic Room	Wall	Decoration/Finish	Poor Finish	Round cleaner socket and under dado
1431	22362	2-L2-014 - Ensuite 10	Floor Finishes	Vinyl	Glue on Capping	Glue on vinyl wall from floor. See photo
1432	22344	2-L2-021 - Single Bed 8 (Adult)	Floor Finishes	Vinyl	Damaged	Flooring damage various location on right as you come into roo. Nor en-suite door, under white board and shelf.
1433	22355	2-L2-013 - Single Bed 10 (Adult)	Floor Finishes	Vinyl	Damaged	Damage on first two panels of flooring as you enter room. Significant deep cuts lots of them and scratches. Photo as an example
1434	22361	2-L2-014 - Ensuite 10	Floor Finishes	Vinyl	Poor Workmanship	See photo. Capping off near toilet behind door.
1435	22404	1-D6-043 - Physio Store	Floor Finishes	Carpet	Misc	Paint on carpet near door frame
1436	22413	1-D6-027 - Treatment Room (OT)	FFE	Cabinet	Missing	Door stops needed for cabinet doors. See photos
1437	22426	1-D6-025 - Infant Measure	Wall	Decoration/Finish	Poor Finish	Poor finish around two double socket
1438	22427	1-D6-025 - Infant Measure	Wall	Decoration/Finish	Poor Finish	Poor finish and marks on wall underneath nurse call
1439	20590	4-COR-004 - Corridor				Access control not working to double door set - see attached.
1440	22392	1-B1-025 - Gowning Lobby Cubicle 15	Door	Door Frame	Finish	Damage poor finish outer door architrave
1441	22391	1-B1-029 - Dirty Utility	Door	Door	Dirty	Paint marks on inside of door next to cabinets. Paint white and grey near handle
1442	22389	1-B1-027 - Clean Utility	Door	Door Frame	Damaged	Damage to both sides of architrave
1443	22388	1-B1-021 - Single Bed Cubicle 18	Wall	Decoration/Finish	Poor Finish	Poor paint finish round thermostat and light switch
1444	22428	1-D6-025 - Infant Measure	FFE	Cabinet	Door alignment	Base cabinet next to wall and upper next to towel dispenser need stops
1445	22429	1-D6-023 - Reception (2 Person)	Wall	Decoration/Finish	Poor Finish	Poor paint finish round electrical sockets
1446	22162	2-L2-049 - Ensuite 2	Door	Door Frame	Damaged	Damage to frame.
1447	22167	2-L2-047 - Ensuite 3	Wall	Decoration/Finish	Damaged	Nail hole and paintwork needs attention and finished.
1448	22166	2-L2-047 - Ensuite 3	Wall	Decoration/Finish	Incomplete	Poor finish to paintwork and needs to be cleaned.
1449	22181	1-H2-026 - Corridor	Wall	Decoration/Finish	Misc	Wall under wall protection scored and splashed with lrn bru

1450	22170	2-L2-047 - Ensuite 3	Wall	Vinyl	Damaged	Glue on wall above capping near toilet and below towel rail. Plus at right side of toilet capping coming away from wall.
1451	22185	2-R1-055D - Open Plan Desk Area	Brookfield Multiplex			Floor boxes at Desk 288 and 289 are damaged and have parts missing. Desks and floor boxes are now numbered in this area. Photos attached
1452	22187	2-R1-055B - Open Plan Desk Area	Brookfield Multiplex			Floorbox at this desk is not screwed to the floor there are a number of other floor boxes in the same area that don't hav eany screws in them attaching them to the floor. Photo attached - Floorbox 271 is an example of 1 which does have screws but not attached to the floor.
1453	22215	All Rooms MPX	Extra Low Voltage	Fire Alarm	Asset Identification Missing	The detecters (multi-function devices) in all areas of the hospital are not identified as per BS5839 can this be done as a matter of course please.
1454	22381	2-L2-007 - Ensuite 12	Wall	Decoration/Finish	Incomplete	Low level between toilet and rail. Wall and vinyl needs finished.
1455	21931	1-P1-172 - SDCU Nurse Management Office	Door	Door Frame	Finish	Frame, wall surrounds and glazing panel/frame both sides are unfinished
1456	21912	1-P1-176 - Consult/Exam	Door	Door Frame	Misc	Door sealed marked
1457	21924	1-P1-175 - Reception (2 person)	Ceilings	Plasterboard	Poor Finish	Poor finish around access panels, radiant panel and AVSU etc
1458	22285	B-PLANT-015A - PTS Plantroom	Extra Low Voltage	Fire Alarm	Damaged	Damaged fire alarm cable, photo's attached.
1459	22288	B-PLANT-015A - PTS Plantroom				PTS control unit covers missing, photo attached.
1460	22289	B-PLANT-015A - PTS Plantroom				No labeling on various control units for the PTS system, photo attached.
1461	20739					Room G-A2-046 Curtain track at ceiling hoist bed space is not secured in the south-east corner. Hoist clashes with curtain track.
1462	21123	2-L2-077 - Patient Interview Room	Floor Finishes	Vinyl	Bubbled	Vinyl bubbled on skirting under mirror
1463	21121	2-L2-077 - Patient Interview Room	Door	Door Frame	Damaged	Outer door frame lower left damaged
1464	21120	2-L2-065 - WC - Staff	Floor Finishes	Vinyl	Incomplete	Top of coving gaps at wall in several places left right of sink wall and behind door
1465	21117	2-L2-076 - Ward Management Office	Wall	Decoration/Finish	Poor Finish	Poor finish around light switch and thermostat
1466	19837	G-X1-002 - EC: Plant Room 2		Electrical General Installation	Misc	On the HV Generator control panels,the Emergency Power Off push buttons areat risk of accidentally being pushed in and preventing the generator from starting. Can these EPOs be covered or replacedwith a shrouded type as used for the Boiler Room Gas Cut off? This could prevent the EPOs from being accidentallyoperated.
1467	19254	G-X1-001 - EC: Plant Room 1	Low Voltage	Electrical General Installation		SWA cables and H07RN-F flexible cables are unsupported from where they leave the ladder rack and overhead cable tray to the bottom gland plate of the "New Haden Pumps" panels (NHP REF No. P218313B and P218313C) adjacent to the incoming gas supply pipe in the Boiler Room. This is placing undue strain on the cables. In addition, a number of cables are twisted. The installation is generally disappointing.
1468	21161	Oil Tank 1	Extra Low Voltage	Fire Alarm	Incomplete	Has this coil of red FP200 which has been partially runfrom the access gate control junction boxes installed in the VIE compound to behind the fuel tanksbeen overlooked and forgotten about?
1469	21580	G-S6-022 - WC - Staff	Brookfield Multiplex			The toilet is filthy.
1470	21581	G-Z1-012 - Stair 9	Door	Door	Damaged	The doors 009 to the service yard are bashed and need replaced.
1471	22306	1-B1-013C - Corridor	Wall	Signage	Damaged	Staff only sign damaged on doors to cor067
1472	22307	1-B1-013C - Corridor	Wall	Decoration/Finish	poorly cut in	Low level above capping and around doorframe for 1b1-010
1473	22311	1-B1-011 - Multidisciplinary Work Area PICU	Wall	Decoration/Finish	Poor Finish	Between door and feature wall.
1474	22312	1-B1-011 - Multidisciplinary Work Area PICU	Floor Finishes	Vinyl	Damaged	Scratch
1475	22338	2-L2-009 - Touchdown Base	Wall	Decoration/Finish	Incomplete	Decoration low level to right of worktop
1476	22319	1-B1-009 - Open Plan Bay (4 bed)	Wall	Decoration/Finish	Incomplete	High level hole repair needs sanded and painted RH corner above RH sinkfar wall
1477	22321	1-B1-015 - Gowning Lobby Cubicle 20	Wall	Decoration/Finish	Poor Finish	Poor finish low level LH of glazed panel into bedroom
1478	22324	1-B1-016 - Single Bed Isolation Cubicle 20	Wall	Decoration/Finish	Poor Finish	RH side of sink, low level
1479	22326	1-B1-016 - Single Bed Isolation Cubicle 20	Wall	Decoration/Finish	Damaged	window sill furthest from gowning lobby damaged
1480	22328	1-B1-018 - Gowning Lobby Cubicle 19	Door	Architrave	Damaged	Damaged frame to bedroom. Previous review red dot in place
1481	22330	1-B1-018 - Gowning Lobby Cubicle 19	Wall	Decoration/Finish	Remove paint	Paint on capping under glazed panel to corridor
1482	22331	1-B1-017 - Single Bed Isolation Cubicle 19	Door	Door	Damaged	Door chipped
1483	22334	1-B1-020 - Single Bed Cubicle 16	Door	Door Frame	Damaged	Frame split and unpainted

1484	22366	2-L2-026 - Single Bed 7	Floor Finishes	Vinyl	Incomplete	Cut lines in vinyl behind door.
1485	22371	2-L2-072 - WC - Staff	Wall	Decoration/Finish	Poor Finish	Uneven wall behind door low level
1486	22386	2-L2-007 - Ensuite 12	FFE	Mirror	Damaged	Scratched in various places. See photo
1487	20956	G-A2-041 - Ward Kitchen	Piped Services	Domestic Water	Access Restrict for Maint.	Zip hydroboil unit fitted sideways with LCD screen controls inaccessible.
1488	21455	3-C1.4-065 - Treatment Room	FFE	Nurse Call	Missing	Hand set missing
1489	22258	1-D6-046 - Rehab Room (OT)	Sink	Fittings	Tap Missing	Taps missing inside cupboard
1490	22259	1-D6-046 - Rehab Room (OT)	FFE	Cabinet	Misc	Revisit slopes and inside cupboards
1491	22260	1-D6-046 - Rehab Room (OT)	FFE	Cabinet	Misc	Revisit infill at tall cupboards
1492	22269	1-D6-062 - Corridor	Wall	Decoration/Finish	Incomplete	Unfinished both sides of fire compartment door
1493	22270	1-D6-062 - Corridor	Wall	Decoration/Finish	Damaged	Paint ?shy? LH of Tree graphic
1494	22271	1-D6-048 - Rehab Room (Physio)	Envelope	Window	Damaged	LH window mechanism broken with window in open position
1495	22274	1-D6-054 - Rehab Room	FFE	Nurse Call	Missing	Holder for handset missing and incorrect handset supplied (reading light control is for inpatient bed spaces)
1496	22275	1-D6-053 - Rehab Room (Physio)	FFE	Nurse Call	Missing	Holder for handset missing and incorrect handset supplied (reading light control is for inpatient bed spaces)
1497	22277	1-D6-062 - Corridor	Door	Door	Function	Alarm contacts missing on fire door
1498	22281	1-D6-036 - Treatment Room (OT Equipment)	FFE	Nurse Call	Missing	Holder for handset missing and incorrect handset supplied (reading light control is for inpatient bed spaces)
1499	22282	1-D6-035 - Treatment Room	FFE	Nurse Call	Missing	Holder for handset missing and incorrect handset supplied (reading light control is for inpatient bed spaces)
1500	22284	1-D6-035 - Treatment Room	FFE	Cabinet	Door alignment	Check closing of end sliding doors- making a snapping sound
1501	21206	G-K1-017 - Drop-In Multi-Purpose Room	Wall	Decoration/Finish	Damaged	See photos for damage and poor finish to top
1502	21217	G-D5-003 - Clean Utility / Dental Store	Wall	Decoration/Finish	Poor Finish	Poor finish between trunking and worktop.
1503	21227	G-D5-010 - Surgery (standard)	FFE	Worktop	Damaged	Damage to left of sink under danicentre. Please see photo
1504	21295	G-D1-011 - Consult/Examination	Wall	Decoration/Finish	Dirty	Windowsill dirty and mastic dirty
1505	21919	1-P1-164 - Changing	Ceilings	Light Fittings	Damaged	See photo poor decs
1506	21988	1-P1-024 - SDCU Post Operative Area	Wall	Decoration/Finish	Damaged	See photos damage at 2 of the metal grilles
1507	21248	G-D2-005 - Cardio Pulmonary Exe Lab	Wall	Decoration/Finish	Incomplete	See photo Damage in front of other sink please see photo.
1508	21266	G-D2-013 - Lung Function Laboratory	Wall	Decoration/Finish	Incomplete	See photo. Above desk worktop.

1509	21269	G-D2-013 - Lung Function Laboratory	Wall	Decoration/Finish	poorly cut in	See photo. Left hand of door inside room
1510	21270	G-D2-013 - Lung Function Laboratory	Wall	IPS Panels	Damaged	See photo.
1511	21271	G-D2-012 - Domiciliary Sleep Studies	Wall	Decoration/Finish	Incomplete	See photo. Between Worktop and trunking
1512	21272	G-D2-012 - Domiciliary Sleep Studies	Wall	Decoration/Finish	Damaged	See photo. Under window
1513	21274	G-D2-012 - Domiciliary Sleep Studies	Wall	Decoration/Finish	Screw Visible	See photo
1514	21276	G-D2-015 - Physical Measurement	Wall	Decoration/Finish	Damaged	See photo. Under writing worktop.
1515	21282	G-D2-009 - ECG Procedure Room	Wall	Decoration/Finish	Incomplete	See photo. Worktop and trunking
1516	21286	G-D1-037 - Meeting Room	Wall	Decoration/Finish	Poor Finish	See photo
1517	21288	G-D1-037 - Meeting Room	Door	Door Frame	Damaged	See photo. Damage to outside frame
1518	21290	G-D1-017B - Corridor	Wall	Decoration/Finish	Damaged	At other side of meeting room past column
1519	21293	G-D1-011 - Consult/Examination	Wall	Decoration/Finish	Poor Finish	Poor finish between worktop and trunking
1520	21296	G-D1-011 - Consult/Examination	Wall	Decoration/Finish	Poor Finish	See photo
1521	21297	G-D1-012 - Consult/Examination	Wall	Decoration/Finish	Poor Finish	See photo
1522	21298	G-D1-012 - Consult/Examination	Wall	Decoration/Finish	Poor Finish	See photos. Mark by graphic and poor finish between worktop and trunking
1523	21939	1-P1-178 - Main Waiting/Play	Wall	Decoration/Finish	Incomplete	Holes in wall
1524	21479	G-D8-001 - Open Plan Office	Wall	Decoration/Finish	Poor Finish	Poor finish at sill edges with wall to all three sills
1525	21941	1-P1-002 - Physical Measurement	Wall	Decoration/Finish	Damaged	See photo
1526	21952	1-P1-005 - Single Bed 1	Wall	Decoration/Finish	Poor Finish	See photo
1527	21948	1-P1-004 - Ensuite 1	Wall	Plasterboard	Poor Finish	See photos
1528	20854	4-PLANT-004 - Plant Room 05	Floor Finishes	Epoxy Flooring	Damaged	Floor alongside and beneath AHU 04-05 requires cleaning and re-painting as it is flaking and breaking up. Investigation required as to why please.
1529	22157	2-L2-048 - Single Bed 2 (Adult)	Door	Door	Misc	Door frame damaged.
1530	20688	4-COR-007 - Corridor				Movement joint adjacent to door 4-S7-007 has a large cut/tear - see attached. Detail is currently not robust enough to facilitate regular and routine cleaning regimes - gaps in finish.
1531	22158	2-L2-048 - Single Bed 2 (Adult)	Wall	Decoration/Finish	Incomplete	Window sill damaged. Needs painted.
1532	22159	2-L2-049 - Ensuite 2	Door	Door Frame	Finish	Inner door frame. Right side facing out damaged and Needs painted.
1533	22168	2-L2-047 - Ensuite 3	Wall	Decoration/Finish	Damaged	Nail hole and paintwork needs attention and finished.
1534	21958	1-P1-010 - Single Bed 1	Door	Door Frame	Finish	See photo
1535	21966	1-P1-007 - Clinic Room	Wall	Dado	Damaged	See photo
1536	21967	1-P1-007 - Clinic Room	Wall	Decoration/Finish	Poor Finish	See photo
1537	21968	1-P1-008 - Clinic Room	Wall	Decoration/Finish	Poor Finish	See photo
1538	21981	1-P1-022 - Clean Utility	Ceilings	Plasterboard	Incomplete	See photo of hole
1539	21985	1-P1-020 - WC (Pat)	Wall	Decoration/Finish	Poor Finish	See photo
1540	21987	1-P1-025 - SDCU Recovery Room	Wall	Decoration/Finish	Damaged	See photo
1541	21740	2-L2-068 - WC - WCH	Door	Door Frame	Damaged	See photo
1542	21831	G-D1-022 - Hoist Bay	FFE	Cabinet	Damaged	See photo.
1543	21834	G-D1-027 - Resuscitation Trolley Bay	Wall	Decoration/Finish	Damaged	See photo. Corner
1544	21777	2-L2-038 - Lobby	Door	Door	Alignment Incorrect	Substantial gap in isolation lobby door
1545	21785	2-L2-052 - Clean Utility	Wall	Decoration/Finish	Poor Finish	See photo
1546	21318	G-D1-028 - Infant Measuring Room	Wall	Decoration/Finish	Poor Finish	See photos
1547	21838	G-D1-017 - Corridor	Door	Door	Dirty	See photo. Paint on lock
1548	21839	G-D1-016 - Consult/Examination (Child Protection	Wall	Mastic	Incomplete	See photo. Mastic around trunking
1549	21319	G-D1-028 - Infant Measuring Room	Wall	Decoration/Finish	Damaged	See photo
1550	21893	G-F1-044 - 1:1	Wall	Decoration/Finish	Poor Finish	Lump in wall See photo
1551	21897	G-F1-007 - Interview 2	Door	Door Frame	Damaged	See photo
1552	21913	1-P1-176 - Consult/Exam	Wall	Decoration/Finish	Damaged	Corner chip
1553	21929	1-P1-174 - General Office (2 person)	Wall	Decoration/Finish	Poor Finish	See photo
1554	22016	G-A1-038 - Draught Lobby (Ambulant)	Door	Kickplates / pushplates	Missing	Kickplates missing lobby side of double doors
1555	22017	G-A1-045 - Waiting (inc Play)	Wall	Decoration/Finish	Incomplete	Make good feature colour wall next to assisted WC following move of fire extinguishers

1556	22020	G-A1-046 - Baby Feed	FFE	Signage	Missing	Infant Feeding Decal missing on door
1557	22021	G-A1-047 - Nappy Change	FFE	Signage	Missing	Baby change Decal missing on door
1558	22022	G-A1-041 - WC - WCH	FFE	Signage	Missing	Wheelchair Decal missing on door
1559	22023	G-A1-042 - WC - WCH	FFE	Signage	Missing	Wheelchair Decal missing on door
1560	22031	G-A1-043 - Staff Changing (F)	Wall	Decoration/Finish	Damaged	Finish around thermostat poor
1561	22041	G-A1-059 - Stock & Sterile Supplies Store	Wall	Decoration/Finish	Damaged	Finish poor around thermostat
1562	22034	G-A1-036 - Reception (2)	Wall	Decoration/Finish	Damaged	Finish around thermostat poor
1563	22037	G-A1-050 - Consultant Office (6 Person)	Wall	Decoration/Finish	Damaged	Finish around thermostat poor
1564	22046	G-A1-060 - Treatment 3	FFE	Nurse Call	Bedhead service incomplete	Cove missing above vertical trunking
1565	22045	G-A1-066 - Plaster Suite	FFE	Nurse Call	Bedhead service incomplete	Cove missing above vertical trunking
1566	22055	G-A1-063 - Pantry	Sink	Fittings	Misc	Hydro tap not dispensing cold water and cupboard underneath smells ?hot? and unit constantly noisy - ? Internal Cooling fan working overtime
1567	22047	G-A1-062 - Treatment 2	FFE	Nurse Call	Bedhead service incomplete	Cove missing above vertical trunking
1568	22048	G-A1-061 - Treatment 4	FFE	Nurse Call	Bedhead service incomplete	Cove missing above vertical trunking
1569	22049	G-A1-064 - Treatment 1	FFE	Nurse Call	Bedhead service incomplete	Cove missing above vertical trunking
1570	22051	G-A1-061 - Treatment 4	Wall	Decoration/Finish	Damaged	Finish around light socket damaged
1571	22062	1-H2-007 - Office (4 person)	Wall	Decoration/Finish	Incomplete	Under Window sill not painted
1572	22063	1-H2-007 - Office (4 person)	Wall	Decoration/Finish	Damaged	See photo. Chip on accent wall lower level
1573	22065	1-H2-007 - Office (4 person)	Door	Door Frame	Finish	Finish around glazed screen, corridor side, very poor
1574	22068	1-H2-009 - Consult/Assess	Wall	Decoration/Finish	Poor Finish	Poor finish around nurse call panel and thermostat
1575	22069	1-H2-009 - Consult/Assess	Wall	Decoration/Finish	Dirty	Dirty mark low level under windowsill
1576	22078	1-H2-010 - Consult/Exam	Wall	Decoration/Finish	Damaged	Poor finish below trunking between bumpers
1577	22073	1-H2-017 - Dirty Utility	Wall	Decoration/Finish	Poor Finish	Poor finish around pipe work from Vernacare and also needs filling
1578	22075	1-H2-010 - Consult/Exam	Door	Door	Damaged	Several chips to edge of half door below lock
1579	22077	1-H2-010 - Consult/Exam	Wall	Decoration/Finish	Poor Finish	Poor finish around thermostat, light switch, panic alarm low level double socket at bumpers and at side of door
1580	22083	1-H2-016 - Sample Processing	Wall	Dado	Poor Workmanship	Top side of dado nearest to sink
1581	22098	1-H2-024 - Single Bed 2	Wall	Decoration/Finish	Dirty	Marks above shelf under tv
1582	22084	1-H2-016 - Sample Processing	Floor Finishes	Vinyl	Damaged	Damaged at side near stainless steel sink
1583	22100	1-H2-024 - Single Bed 2	Envelope	Window	Missing	Part of blind opening missing see photo
1584	22111	1-H2-023 - Lobby	Door	Door Frame	Damaged	Below lock insert see photo
1585	22112	1-H2-023 - Lobby	Wall	Decoration/Finish	Damaged	Mark above hook and scratches above that. Surface uneven.
1586	22089	1-H2-028 - Touchdown Base	Wall	Decoration/Finish	Poor Finish	Around task light see photo and under dado needs another coat of paint
1587	22116	1-H2-021 - Single Bed 1	Door	Door Frame	Damaged	Mastic coming away and damage to frame o Above hinge
1588	22092	1-H2-011 - WC (Staff)	Door	Door Frame	Damaged	Damaged in several places and poor finish around middle hinge
1589	22093	1-H2-011 - WC (Staff)	Wall	Decoration/Finish	Damaged	Damaged under coat hooks
1590	22094	1-H2-011 - WC (Staff)	Wall	Decoration/Finish	Poor Finish	Side of door frame
1591	22050	G-A1-060 - Treatment 3	Wall	Decoration/Finish	Incomplete	Hole under data socket inside entrance
1592	22054	G-A1-062 - Treatment 2	Wall	Decoration/Finish	Damaged	Finish to column on socket trunking side needs redone

1593	22040	G-A1-051 - Corridor	Wall	Protection	Misc	Corner protection towards beverage bay from staff change loose at bottom
1594	22024	G-A1-045 - Waiting (inc Play)	FFE	Clock	Damaged	Clock face not clear ?damaged
1595	22097	1-H2-024 - Single Bed 2	Wall	Decoration/Finish	Poor Finish	Poor finish around thermostat light switch and bms and doorframe and tv data point
1596	22104	1-H2-024 - Single Bed 2	FFE	Mirror	Damaged	Scratched
1597	22105	1-H2-022 - Ensuite	Door	Door Frame	Damaged	Several dents handle side of door frame. See photos
1598	22107	1-H2-022 - Ensuite	Wall	Decoration/Finish	Damaged	Damage near thermostat and nurse call
1599	21311	G-D1-014 - Consult/Examination	Wall	Decoration/Finish	Damaged	See photo
1600	21310	G-D1-014 - Consult/Examination	Wall	Decoration/Finish	Damaged	See photo
1601	21309	G-D1-014 - Consult/Examination	Wall	Decoration/Finish	Poor Finish	See photo
1602	21308	G-D1-014 - Consult/Examination	Wall	Decoration/Finish	Poor Finish	See photo
1603	21306	G-D1-013 - Consult/Examination	Wall	Decoration/Finish	Screw Visible	See photos
1604	21305	G-D1-013 - Consult/Examination	Wall	Decoration/Finish	Damaged	See photo
1605	21791	G-D1-015 - Physical Measurement	Wall	Decoration/Finish	Incomplete	See photo. Scratches right of height stick, and dent corner to far right or height stick.
1606	21792	G-D1-015 - Physical Measurement	Wall	Decoration/Finish	Incomplete	See photo. Cuts around double socket left of height stick
1607	21793	G-D1-033 - Treatment Room (with prep area)	Wall	Decoration/Finish	Dirty	See photo. Appears to have run lines from ceiling right of trunking
1608	21796	G-D1-033 - Treatment Room (with prep area)	Wall	Decoration/Finish	Incomplete	See photo. Between worktop and trunking
1609	21797	G-D1-033 - Treatment Room (with prep area)	Wall	Decoration/Finish	Incomplete	See photo. Around sockets at cabinets.
1610	21800	G-D1-040 - Consult/Multi-Disciplinary	Envelope	Window	Scratched	See photo. Window sill dirty and paintwork scratched in places
1611	21873	G-F1-038 - WC (WCH)	WC	Finish	Missing	Part of ips panel missing
1612	21891	G-F1-044 - 1:1	Door	Door Frame	Finish	See photo
1613	21892	G-F1-044 - 1:1	Wall	Decoration/Finish	Poor Finish	See photo
1614	21901	1-P1-178 - Main Waiting/Play	Wall	Decoration/Finish	Poor Finish	Wall finish between it and ceilings in multiple places needs attention. See photos for examples
1615	21902	1-P1-178 - Main Waiting/Play	Wall	Decoration/Finish	Poor Finish	Poorly finished/ scuffed See photos for examples
1616	21903	1-P1-180 - WC - WCH	Wall	Decoration/Finish	Poor Finish	Poorly finished/ scuffed See photos for examples
1617	21921	1-P1-170 - Immediate Pre-Theatre Wait	FFE	Outlet	Misc	Poor finish at OUT005See photo
1618	21911	1-P1-176 - Consult/Exam	Door	Door	Catching on flooring	
1619	21917	1-P1-164 - Changing	Door	Door	Misc	Fire door sign on wrong side
1620	21963	1-P1-011 - Ensuite 3	Wall	Decoration/Finish	Poor Finish	See photo
1621	21940	1-P1-178 - Main Waiting/Play	FFE	Signage	Wrong Location	Main waiting/ play sign should be on internal dept door between measuring bay and door marked 1-P1-001
1622	21953	1-P1-005 - Single Bed 1	Wall	Decoration/Finish	Poor Finish	See photo of under reading light
1623	21956	1-P1-005 - Single Bed 1	Wall	IPS Panels	Damaged	See photo
1624	21990	1-P1-024 - SDCU Post Operative Area	Wall	Decoration/Finish	Poor Finish	See photo at worktop by danicentre
1625	21819	G-D1-034 - Consult/Examination	Wall	Decoration/Finish	Incomplete	See photo. Between worktop
1626	21820	G-D1-008 - Plaster Suite (3 bays)	Wall	Decoration/Finish	Incomplete	See photo. Around
1627	21803	G-D1-031 - Clean Utility	Wall	Decoration/Finish	Incomplete	See photo. Mastic has been replaced but walls not painted.
1628	21813	G-D1-036 - Consult/Examination	Envelope	Window	Scratched	See photo. Window sill
1629	21932	1-P1-172 - SDCU Nurse Management Office	FFE	Signage	Damaged	Door sign damaged
1630	21922	1-P1-175 - Reception (2 person)	FFE	Signage	Missing	Reception sign missing
1631	21868	G-F1-018 - WC (WCH)	WC	Finish	Missing	Missing ips panel.
1632	20597					Service Yard Area Remove Drywall screw from cladding and residual tape residue - see attached.
1633	21821	G-D1-008 - Plaster Suite (3 bays)	Wall	Decoration/Finish	Damaged	See photo.
1634	20596					Service Yard Area Drywall screw used on cladding - see attached.
1635	21827	G-D1-032 - Consult/Examination	Wall	Decoration/Finish	Damaged	See photo. Accent wall
1636	21828	G-D1-032 - Consult/Examination	Door	Architrave	Damaged	See photo.
1637	21832	G-D1-022 - Hoist Bay	Wall	Decoration/Finish	Damaged	See photo. Corner below cabinet.
1638	21934	1-P1-171 - WC - Staff	FFE	Signage	Incorrect	Scratch on door

1639	19805		Low Voltage	Electrical General Installation	Misc	The heaters within the manifold room number G-Y1_003 are not compliant with the area, these heaters cannot have open elements, must be enclosed and the size is to large, 3kw each is too much heat as there is three heaters, the room requires to be above 10 degrees centigrade at all times but not as hot as three 3kwheaters will take it.
1640	21951	1-P1-005 - Single Bed 1	Door	Vision Panel	Misc	Glazing beading pinholes not filled in
1641	20108					Stair 4 - residue left on handrail - see attached photo. Optimal.
1642	21950	1-P1-003 - Single Bed 1	Door	Vision Panel	Misc	Glazing beading pinholes not filled in
1643	21864	G-F1-014 - Secretary/Filing Office (3 person)	Door	Door Frame	Finish	Poor finish around frame.
1644	21960	1-P1-010 - Single Bed 1	Wall	Decoration/Finish	Poor Finish	See photo above door
1645	21957	1-P1-010 - Single Bed 1	Door	Vision Panel	Misc	Pinholes in vision panel needs filled
1646	20179	G-CT-004 - PARU Garden				P1 CONTRACTORS: General observations in and around the PARU Garden. Litter pick; tidy up; bark mulching missing to areas; plants missing; soil levels to high to planted beds. See attached images.
1647	21846	G-F1-002 - Psychiatrist/Psychologist	Door	Door Frame	Finish	Poor finish on left- side of frame in the room.
1648	21847	G-F1-002 - Psychiatrist/Psychologist	Wall	Decoration/Finish	Incomplete	Paint finish chipped on feature wall above worktop
1649	21978	1-P1-022 - Clean Utility	Wall	Decoration/Finish	Poor Finish	Poor finish side of door
1650	21974	1-P1-013 - WC - WCH	Door	Door	Damaged	See photos chipped 2 places
1651	21848	G-F1-002 - Psychiatrist/Psychologist	Wall	Decoration/Finish	Incomplete	Paint finish on wall below wall cabinet unfinished to a reasonable standard.
1652	21869	G-F1-018 - WC (WCH)	FFE	Nurse Call	Misc	Nurse call panel has gaps round.
1653	21850	G-F1-003 - Storage (Testing)	Wall	Decoration/Finish	Poor Finish	Paint and plasterwork finish on right-hand side poorly finished and filled.
1654	21851	G-F1-003 - Storage (Testing)	Wall	Decoration/Finish	Poor Finish	Holes in the wall on right hand wall need filled and painted.
1655	21977	1-P1-013 - WC - WCH	Wall	Decoration/Finish	Poor Finish	Red dots in place several areas work not done yet
1656	21880	G-F1-008 - Interview 3	Door	Door Frame	Finish	Door Frame chipped
1657	21854	G-F1-004 - Ward Managers' Office (4 person)	Wall	Decoration/Finish	Incomplete	Previous repair patch left unpainted on wall on the left.
1658	21995	1-P1-025 - SDCU Recovery Room	Wall	Glazed Partition	Misc	Integral blind missing from internal screen, needed for patient privacy and dignity
1659	21994	1-P1-026 - SDCU Recovery Room	Wall	Decoration/Finish	Poor Finish	Around light switch
1660	21998	1-P1-021 - SDCU Post Op Staff Base	Wall	Decoration/Finish	Poor Finish	See photo
1661	22002	1-P1-022 - Clean Utility	Wall	Decoration/Finish	Poor Finish	See photo
1662	22001	1-P1-022 - Clean Utility	FFE	Signage	Damaged	See photo
1663	22003	1-P1-022 - Clean Utility	Wall	Decoration/Finish	Poor Finish	See photo at side of upstand
1664	22009	1-P1-023 - Dirty Utility	Wall	Decoration/Finish	Poor Finish	Above tall cupboard
1665	22011	1-P1-023 - Dirty Utility	Wall	Decoration/Finish	Poor Finish	See photo
1666	22013	1-P1-024 - SDCU Post Operative Area	FFE	Lamp	Misc	Light switch on trunking not working in reading setting at space 8, middle space between two single rooms
1667	22014	1-P1-023 - Dirty Utility	FFE	Bracket	Missing	DIS004 bedpan dispenser missing from back wall
1668	21889	G-F1-009 - Interview 4	Wall	Decoration/Finish	Paint Marks	Poor finish around cleaners socket
1669	21855	G-F1-004 - Ward Managers' Office (4 person)	Wall	Decoration/Finish	Incomplete	Finish on wall on inside to the right of the door poorly finished/rough.
1670	21862	G-F1-014 - Secretary/Filing Office (3 person)	Door	Door Frame	Finish	Poor finish around frame.
1671	21861	G-F1-010 - 1:1	Brookfield Multiplex	Decoration/Finish	Misc	Wall under worktop scuffed
1672	21863	G-F1-013 - Storage / Photocopy	Wall	Decoration/Finish	Incomplete	Poor finish data socket
1673	21874	G-F1-038 - WC (WCH)	Wall	Decoration/Finish	Flashing	Poor finish around nurse call
1674	21866	G-F1-014 - Secretary/Filing Office (3 person)	Door	Door Frame	Finish	Poor finish around frame.
1675	21865	G-F1-014 - Secretary/Filing Office (3 person)	Wall	Decoration/Finish	Incomplete	Poor finish around socket
1676	21894	G-F1-044 - 1:1	Door	Door Frame	Poor Finish	Poor finish
1677	21867	G-F1-014 - Secretary/Filing Office (3 person)	Door	Door Frame	Finish	Poor finish around frame.
1678	21870	G-F1-018 - WC (WCH)	Door	Door Frame	Damaged	Damage to frame on inside
1679	21885	G-F1-009 - Interview 4	Door	Door Frame	Finish	Poor finish around door frame
1680	21888	G-F1-009 - Interview 4	Door	Door	Paint Marks	Paint on door handle

1681	21788	B-PLANT-002 - Plant Room 15	Piped Services	Heating	Incorrect Valve installation	The pressure relief valve in heat station 4 is passing again, I have asked this before but can this valve and all the others in all the heat stations of the same type ane replaced and installed in the vertical position as all of these at the moment are in the horizontal position which could be affecting these.
1682	21798	G-D1-033 - Treatment Room (with prep area)	Envelope	Window	Dirty	Window Sill dirty
1683	21219	G-D5-008 - Surgery (standard)	Wall	Decoration/Finish	Dirty	See photo.
1684	21213	G-K1-016 - Drop-In Lounge / Beverage Bay	Wall	Decoration/Finish	Poor Finish	See photo
1685	21215	G-D5-003 - Clean Utility / Dental Store	Ceilings	Plasterboard	Poor Finish	Poor finish at ceiling hatch next 3rd light.
1686	21216	G-D5-003 - Clean Utility / Dental Store	Wall	Decoration/Finish	Incomplete	Hole for wire for CD cupboard needs filled and sealed.
1687	21220	G-D5-008 - Surgery (standard)	Wall	Decoration/Finish	Poor Finish	See photo.
1688	21239	G-D5-007 - Recovery	Wall	Decoration/Finish	Poor Finish	Black marks on wall under window sill.
1689	21243	G-D5-005 - Dirty Utility	Wall	Decoration/Finish	Damaged	See photos
1690	21246	G-D5-002 - Laboratory	Wall	Decoration/Finish	Misc	Number of marks and dents on walls. Poor finish around Eden unit.
1691	21250	G-D2-005 - Cardio Pulmonary Exe Lab	Wall	Decoration/Finish	Poor Finish	See photo clock socket, thermostat and cleaner socket
1692	21251	G-D2-005 - Cardio Pulmonary Exe Lab	Wall	Decoration/Finish	poorly cut in	See photo. Cut in rt side of door in room.
1693	21262	G-D2-014 - Exercise Tolerance Test Room	Envelope	Window	Dirty	Sill dirty and marked. Edge needs finished off. See photo
1694	21249	G-D2-005 - Cardio Pulmonary Exe Lab	Wall	Decoration/Finish	Damaged	See photo. Small dent to wall right of worktop at eye level and near coat hooks.
1695	21257	G-D2-005 - Cardio Pulmonary Exe Lab	Wall	Decoration/Finish	Damaged	See photo. Walls behind the automatic double doors both sides. damaged
1696	21315	G-D1-025 - Physical Measurement	FFE	Rail	Misc	See photo. Height measure fixtures broken
1697	21312	G-D1-004 - WC - Staff	Wall	Decoration/Finish	Poor Finish	Poor finish around internal door frames
1698	21324	G-D1-017B - Corridor	Wall	Decoration/Finish	Screw Visible	Screw visible See photo.
1699	21326	G-D1-007 - DSR	Wall	Decoration/Finish	Damaged	See photo. Under clips small mark
1700	21753	2-L2-057 - Multi-Disciplinary Office	Wall	Decoration/Finish	Incomplete	Seal incomplete
1701	21749	2-L2-073 - Reception (1 person)	Ceilings	Plasterboard	Incomplete	Seal incomplete
1702	21741	2-L2-068 - WC - WCH	Wall	Decoration/Finish	Poor Finish	Poor finish to left of frame
1703	21743	2-L2-071 - WC (A)	Door	Door Frame	Damaged	Chips all over door frame. Photos as examples.
1704	21766	2-L2-146 - Corridor	Door	Architrave	Damaged	Poor finish at door resigns.
1705	21746	2-L2-074 - Waiting Area	Wall	Decoration/Finish	Poor Finish	Poor finish above capping
1706	21747	2-L2-074 - Waiting Area	Wall	Decoration/Finish	Poor Finish	Poor finish to window sill and surround.
1707	21762	2-L2-146 - Corridor	Wall	Decoration/Finish	Poor Finish	Walls dirty
1708	21750	2-L2-057 - Multi-Disciplinary Office	Door	Door Frame	Finish	Chips in doorframe
1709	21761	2-L2-060 - WC (A)	Wall	Skirting	Misc	Capping poor finish
1710	21760	2-L2-060 - WC (A)	Wall	Skirting	Misc	Capping poor finish
1711	21767	2-L2-146 - Corridor	Floor Finishes	Vinyl	Damaged	Floor damaged
1712	21765	2-L2-146 - Corridor	Wall	Decoration/Finish	Misc	Hole in wall
1713	21769	2-L2-055 - Sitting Room	Wall	Decoration/Finish	Damaged	Window sill damaged and requires mastic
1714	21771	2-L2-038 - Lobby	Wall	Decoration/Finish	Damaged	Wall damaged.
1715	21772	2-L2-038 - Lobby	Door	Architrave	Dirty	Paint on door frame
1716	21773	2-L2-039 - Single Isolation Bed 17 (Adult)	Wall	Skirting	Poor Workmanship	Gaping incomplete
1717	21768	2-L2-055 - Sitting Room	Wall	Skirting	Damaged	Capping needs repaired
1718	21770	2-L2-039 - Single Isolation Bed 17 (Adult)	Wall	Decoration/Finish	Damaged	Wall damaged.
1719	21782	2-L2-044 - Ensuite 19	Wall	Skirting	Misc	Gap above capping
1720	21784	2-L2-052 - Clean Utility	Wall	Skirting	Misc	Gap above capping
1721	21781	2-L2-043 - Single Bed 19 (Adult)	Wall	Decoration/Finish	Poor Finish	Window sill poor decoration.
1722	21775	2-L2-040 - Isolation Ensuite 17	Wall	Skirting	Misc	Gaps above capping
1723	19278					Poor finishing - see attached photo.

1724	19517					Cardiac stress lab - IPS panel backing onto external courtyard space: Mains water connection for external bib tap has been taken from IPS through the external wall - see attached photos. The result is a draft and cold bridging resulting from absent vapour barrier an insulation. Finish in robust detail. There is also residual debris in the IPS itself which should be removed asap.
1725	20477	All Rooms MPX				No signs installed yet for automatic doors, as per BS EN16005 and BS 7036-0. See attached.
1726	20331	G-I1-005 - Enquiry/Information Desk (2 Person)				Missing finish around column and worktop - see attached image.
1727	20402	CAMHS green roof				Grassed areas are dying back - see attached. Is this heat escaping from the building envelope and killing off the grass or is there a problem with the soil?
1728	20382					Area 3-CT-019 Missing escutcheon off glazed door - see attached.
1729	20385					Area 3-CT-019 How do you lift off and access the draiange channel for maintenance as it appears to be stuck fast with the resin bound surfacing. See attached.
1730	19154	2-T2-014 - Riser	Piped Services	Medical Gas		Pipe sleeves hard against riser platform. Pipe sleeves held in place with adhesive tape. Pipe sleeves appear to have dropped from intended position. Pipe brackets not secured
1731	20066					The external furniture located in, for example, area 4-CT-022 is of different visual appearance - see attached photos of some examples. It looks odd. The seating has oiled hardwood slats yet the seated benches are not oiled at all - is this correct and to specification?
1732	18529	2-M2-018 - Changing				Flex to grill to long and fit bend on to duct
1733	18493	2-M2-014 - WC (Acc) (P)				No accesss to rodding access on drainage above ceiling
1734	18103					No support or joiningstrips above AHU 02/11
1735	18092					identification on cables at panels
1736	18083					make unions at AHU ACCESSION BLE THROUGH INSULATION
1737	16567	G-X1-002 - EC: Plant Room 2				Tag all earths at earth bar
1738	16515	Mezzanine				Identify and tag all cables going into all panels
1739	16511	Mezzanine				Fit all loose panels and screws toDB panels EC1 and EC2
1740	2991	G-D1-011 - Consult/Examination	Ventilation	Ductwork	Misc	Use of Flexible Ductwork. SHTM 03-01: Part A Design and Validation state 5.15 Flexible ductwork is unsuitable for air distribution in healthcare applications. It should only be used to make the final connection to a terminal (See Paragraphs 5.54 and 5.55). 5.55 Flexible ducting will cause a significant frictional loss and may be difficult to clean and should never be used in lieu of a bend. Where installed it should take the most direct route and be as short as possible, never exceeding 1 metre in length. See attached photograph which shows an installation which appears to contrary to this standard as the flexible ductwork has been used in lieu of a bend/bends.
1741	20271	4-Z1-002 - Stair 02				Window clear opening only provides 0.56m2 with both windows opened up against restrictors. Requirement is for 1m2 clear opening.

1742	19155					External canopy at AE emergecy entrance showing signs of corrosion when viewed from above.
1743	20061	G-X1-001 - EC: Plant Room 1				The structural steel upright adjacent to the pressurisation unit in the boiler room, appears to have been dented by Hilti nails fired being fired into it using too strong a cartridge. This was carried out originally by StopFire. Could Linear organise this? instumescent paint required.
1744	19955	G-X1-001 - EC: Plant Room 1	Piped Services			On the main gas pipe there are two valves either side of the main solinode/slam shut valvethe valve the valve at the top is not accessable in a safe manner and requires a safe sloution for access
1745	19953	G-X1-001 - EC: Plant Room 1	Piped Services			At the rear of boiler 3 there are 2gas valves about ten feet high it is not posible to reach these due to height and the fact we can't use steps due to the following reasons 1. there is no space to safely open them up 2. if we go up the steps or any elevated platform we would be about the edge protection this requiresto be looked atfor access and maintenance reasons
1746	20336					The metsec install to hold ramp light fittings prohibits the effective use of the handrail - see attached images.
1747	20337					The CHWB is installed as such - see attached. The fall of the waste pipe effectvely creates a ponding internally within the pipe, thus causing an infection control issue. This affects all similar CWHB within the Facilities.
1748	19978					AHU 02-18 Vesda supports missing
1749	20520					CAMHS entrance vestibule Visible gap in wall make-up. See attached.
1750	20521					CAMHS entrance vestible - gap at high level. See attached.
1751	20542	G-F1-066 - Corridor				CAMHS entrance vestibule - open gaps to ceiling void in soffit generally and around light fittings - see attached images. Aea is external to lobby G-F1-066.
1752	20546	All Rooms MPX				All rooms with assisted baths - the pipe penetrates the skirting upstand. In all cases the pipe penetrations are not sealed with a robust detail. See attached examples.
1753	20547	All Rooms MPX				Permanent install? See attached.
1754	20553					Damage to door to room 3-C1.4-071 See attached.
1755	20556	Entrance Plaza				Car parking area Damage to kerb logs and moss in between paviors. See attached.
1756	20576	1-P1-037 - Corridor				Por finishing around movement joints - see attached. Why are joints out of alignment?
1757	20594	All Rooms MPX				For all lifts - see attached. How is this gap sealed to allow for routine and regular cleaning noting the floor finish into continue into the space?

1758	20625	4-S7-011 - WC - WCH				When door is fully closed there remains a see through gap - dignity issues when in use. See attached. Please check all similar doors.
1759	20700	4-S7-008 - Storage / Dishwashing				Missing screw to grille - see attached. Where and how are these extract units controlled as they are currently running (it would appear) all the time?
1760	20740					Area 1-L1-093 Window handle not working - see attached.
1761	20743	3-C1.3-025 - Rehabilitation Room				Area 3-CT-017 Door leading into room 3-C1.3-025 has an escutcheon missing from door - see attached.
1762	20744	3-C1.3-025 - Rehabilitation Room				Area 3-CT-017 Door leading into room 3-C1.3-025 has a gap to the RHS of the door viewed from the oustide. See attached.
1763	20745					External door to area 1-RF-002A Missing escutcheon from door - see attached.
1764	20748					Large canopy at ED Area of dirt build-up and drains not laid to fall - see attached.
1765	20749					Small canopy at ED Puckering on tensile fabric and drains not laid to fall - see attached.
1766	20836					Area B-COR-014 Bollard loose - see attached.
1767	20839					Street Courtyard 1 - 2-CT-013 Render contaminaion on extruded cill - see attached.
1768	20840					Area 3-CT-017 Colour mis-match on fixing to cope - see attached.
1769	20858	1-P1-119 - Reception (4 person	Brookfield Multiplex			DCN Theatre - Nurse Call Sign Wrong layout on screen. Screen shows Paediatric Theatres.
1770	20859	4-S7-010 - Restaurant				Restaurant Area Under servery counter, next to roller shutter; cupboard is of poor build quality with door loose on opening. Wall finishes unsealed; Holes in walls / partiions unsealed; excessive cabling; area requires cleaning. All finishes should be sealed for hygienic purposes. See attached images.
1771	20861	2-M3-002 - Treatment Room				Mastic has not been fitted around area. Needs general tidy up.
1772	20862	2-L2-058 - Store				A few issues in this room Press exit button very loose. Capping loose from vinyl / wall
1773	20865	2-L2-124 - Ensuite 5				Shower drain. Screws set to high and a trip hazard.

1774	20875					Noted in 4th floor wet plant room PU-04-Plant-006 The control panels for the pumps located in the east side of this plant room have the plastic membrane front panels detaching from the control panels. It is possible to see into the panel insides on a number of these units. Plastic membrane front panels require to be reattached to the control panel fronts.
1775	20879		Brookfield Multiplex			L2 - Pneumatice Tube System Hanger to hold the PODs is missing
1776	20880		Brookfield Multiplex			Ward 230 Nurse Call Screen of rooms. The Assisted bathroom 2-L2-080 - this room also needs to be on Ward 230 Nurse Call system. This room could be used by patients from both wards.
1777	20884	2-L2-078 - Ward Kitchen				Ward Kitchen Hydortap not fixed properly. Hydrotap bending over.
1778	20921		Ventilation	Ductwork	Blank Ends not covered	AHU 02-21, the smoke sensor within the ductwork protrudes out the other side of the ductwork and requires to be covered withan appropriate cap.
1779	20925	G-D1-043 - Corridor				Door to main corridor Uneven threshold Hole in floor at right hand standard Back of architraves not painted Corridor - back of architrave not painted both sides. Damage to edge protection low level Damage to architrave left hand low level. Walls - poor finish right and left hand of door Ceiling - dmaged ceiling tile at detetector dirty tile adjacent to detector
1780	20929	G-D1-038 - Consult/Examination				Door - External - chip in architrave and standard right hand low level Ceiling - adjust ceiling trim over basin seal needs amended at right hand bedhead trunking
1781	20930	G-D1-023 - Dirty Utility				Door - door does not close on the closer Walls - Mark on wall where the door handle strikes Floor - flooring lifting at left hand side of door Ceiling - dirty tiles right hand of light at door
1782	20932	G-D1-035 - Consult/Examination				Wall at right hand door of architrave needs reviewed and painted Ceiling - adjust ceiling grid over basin FFE - Seal left end of trunking needs reviewed Mastic needs repaired at left handont edge of worktop

1783	20934	G-D1-039 - Consult/Examination				Door - External damage to door surround and lower level Ceiling - adjust trim above the behdead trunking FFE - seal at right hand end of bedhead trunking needs reviewed
1784	20936	G-D1-008 - Plaster Suite (3 bays)				Door - External - screw missing in kick plate. Door not closing properly Ceiling - dirty tile above basin Poor finish around supension eye Vent not sitting down in grid FFE - Mastic seal to right hand end of cupboards needs reviewed Mastic on wall at left hand top of wall cupboards needs reviews
1785	20937	G-D1-032 - Consult/Examination				External Door - damage to door surround Internal Door - damage to smaller leaft internal low level Walls - mark on wall left hand top of graphics Ceiling - Dirty tile at sensor Dirty tiles above curtain track - Left hand side wall FFE - Seal right hand of bedhead trunking needs reviewd Remove tape from vertical trunking.
1786	20941	B-Z1-003A - Stair 03				The door reference disc for this door has been placed on the inside of the door and noting this is a store and may be locked, this disc position doesnt make sense. See attached.
1787	20949					ETFE roof - all areas. Exposed soffit to insulation - close out between aluminium flashing and insulation e.g. compriband, backer rod etc. Should be sealed.
1788	20952	B-PLANT-001A - Plant Room 15				Doors to Area B-Plant-001A and B-Plant-001C Signage required to signify hazards and importance i.e. regulatory HS signage. See attached. This comment applies to all areas of the building generally.
1789	20959	2-G2-003 - Clean Equipment	Brookfield Multiplex			Door: No easy clean Walls : Paint work near vent needs tidying , corner paint work poot around gel dispenser. Floor: Joints in whole room require mastic. Ceiling : Incomplete finish at end of cupboards. Gap to be filled in cupboard under worktop/gel dispenser. FEE: 9 shelves obscure plugs, damamge to units and shelving , Skirting missing form 2 racks. Damage to double base unit underst aid kit. Damage to joint in worktop window wall. Light scews are losse require tightening. Window does not close.

1790	20961	2-COR-001 - Corridor	Brookfield Multiplex			Door: Skirting on either side of leading in to Theatre plant room A needs repainting. Missing kick plate on door leading into main corridor. Paint requried above same door. Walls: Bubble next to Centurion 2000 Floor: Gouges several out of flooring needs replacing. Vinyl has lots of scratches. Capping poor in places. Ceiling: Damaged dirty ceiling tiles.
1791	20964	2-M4-001 - Corridor	Brookfield Multiplex			2-M4 -001 AND 2-M4 -020 Corridors lower level of corridor needs reviewed and painted.(Walls popped nails and dinks in walls). Floors: Scratches on the floor in particular rm 017 . Trim is split by assisted WC and capping by switch cupboard is poor. FFE : Tidy up fill each side of door M4-004. Switch cupbaord 022 door frame very poor finish.
1792	20967	2-M4-006 - WC - WCH	Brookfield Multiplex			Door: Paint required around keeper. FFE: Hatch cover needed. Needs a good clean.
1793	20968	2-M4-009 - EMG/Nerve Conduction Room	Brookfield Multiplex			Door: Easy clean jammed. On smal leaf side chip in door Walls: Paintwork between door and wall tidyied. Floor: Capping untidy on bed head trunking wall. TRO004 vertical trunking chips and marks prominant.
1794	20970	2-M4-019 - EMG Recording Room	Brookfield Multiplex			Door: Door frame damaged right hand side.Behind door requires anothr coat of paint.Screw missing form kick plate on large leaf door. Walls: Around wall switches need repainted. Floors: Skirting corners are split. FFE: No hand held nurse call present.
1795	20972	2-M4-011 - EMG/Nerve Conduction Room	Brookfield Multiplex			Walls: Pop nails showing through wall on the trunking wall. Plaster chipping on trunking wall.On the window wall the column needs tyding. Ceiling: Ceiling above IPS needs repaired. FFE: Around black out blind needs sealed with mastic Missing nurse call hand set. The seal on TRO004 required. Cable Management required. IPS scratched on the outside Hooks are squint.
1796	20973	2-M4-017 - EEG Recording Room				Doors: Chip on large leaf door. Walls: Walls around the door and sockets require painting. Pencil marks on paintwork. In the corners there is shrinkage. Ceiling: Ceiling im bent causing gaps. FFE: Next to wall worktop finish poor. Hand held nurse call missing Black out blind requires to be sealed. TRO004 vertical trunking damaged.

1797	20974	2-M4-018 - EEG Recording Room	Brookfield Multiplex			Doors : Lower door surrounds left and right require painting. Walls : Feature wall needs tyding board and under cupboard left hand side. Floor: Easy clean needs to be fitted correctly FFE: Black out blind frame required to be sealed. At the top of the trunkinfg requires to be sealed. Work top quality finish is ver poor. Room needs to have a good clean. All paint work needs to be reviewed.
1798	20984	3-C1.5-006 - Breast Pump Room				This room should not have a nurse call/reset unit. Scratch on floor
1799	20989					external roof pan to atrium roof Damage to extruded insulated cementitious board - see attached
1800	20990					External roof pan to atrium roof area Damage to extruded insulated cementitious board - see attached
1801	20991	2-M3-002 - Treatment Room				Door - internal surround needs reviewed and made good. Walls - finish above door needs reviewed and made good Floor - Vinyle in middle of floor scratched/broken Ceiling - missing tile and overall ceiling needs reviewed and cleaned.
1802	20992	2-M3-003 - Treatment Area				Wall - (N) wall at bottom needs reviewed and made good.. Where curtain rail moved the old screw holes need filled in and painted. To the right of the vertical trunking where the curtain was moved needs sanded and painted TRU004 - scarve at top of trunking needs reviewed (gap between end of scarve and ceiling)
1803	20994	2-M2-009 - ADL Kitchen				External door surround needs reviewed and made good Walls - Paint work surrounding the OUT 005 needs reviewed and made good Finish around OUT010 needing screws IPS, and finish around pillar needs reviewed and made good FFE - IPS (L) side needs reviewed and made good
1804	20995	2-M2-011 - Treatment Room				Door scuff on floor Walls - dirty mark on (N) wall Nail pins showing on (S) wall Floor skirting not finished Ceiling Tiles need reviewed and made goo (R) side of IPS FFE - Blackout blind squint Damage to panel at front of sink in both corners. The screws are sitting a bit proud on unit that is fixed to sink.
1805	21160	3-K2-001 - Corridor				Corian front to reception desk with print detail is missing. Glazing graphics on internal screen to non-residents lounge are also missing. Graphics specified and costed in Board Change MVC 036.

1806	20535					Stair 2 double door set B-Z1-002 - damage highlighted on the attached image.
1807	20523					gap at side of the sliding gate to waste area and plate missing from fence next to gate.
1808	20525					SSO have covers for screws so why dont data sockets?
1809	20720					Light out on lighting bollard within PARU garden - see attached.
1810	20668	All Rooms MPX	Ventilation	Ductwork	Misc	All isolation rooms are alarming out of limits, can this please be rectified and demonstrated.
1811	20644	4-S7-010 - Restaurant				Within main servery area - Back not fitted to unit - see attached.
1812	20948	B-Z1-002 - Stair 02	Stair			The bottom fixings for the banisters within the basement lobby in stairwell 2 have not been installed and require these to fix the hand rails to the wall.
1813	20915	B-PLANT-003 - Plant Room 15	Piped Services	Heating	Misc	All heat stations the pressure and temperature relief valves are relieving and are installed on the horizontal, can these be replaced and installed on the vertical.
1814	20935	G-D1-033 - Treatment Room (with prep area)				Walls - paint finish below trunking at worktop needs reviewed and painted
1815	20951					Leaves evident beneath membrane - see attached.
1816	20927	G-D1-040 - Consult/Multi-Disciplinary				Walls - paint work between worktop and trunking needs to be completed
1817	20942	G-Z1-003 - Stair 03				Door reference disc positioned on the wrong side of the door - see attached.
1818	21003	2-M2-015 - WC - Staff				finish behibnd Right Door frame (internal) poor finish and needs reviewed and made good
1819	20955	B-PLANT-001A - Plant Room 15				HV door missing statutory signage warning of health and safety risks - see attached.
1820	21008	2-M2-013 - Staff Lockers				Finishing external surround needs reviewed and painted
1821	20835	4-T3-001 - Plant Room 06				Evidence of isolated floor finish break up - see attached.
1822	20890	Hospital Square				Tree fallen over next to Anne Rowling Building - see attached.
1823	20944	3-Z1-011 - Stair 07 Lobby				Relocate door exit press button to nearer the door - see attached.
1824	20958	G-CT-006 - Staff Courtyard				Expansion joint failure in south-west corner - see attached.
1825	20983	3-C1.5-005 - Nappy Change				This room should not have nurse call.
1826	20834	B-PLANT-002 - Plant Room 15				Evidence of a leak - see attached.
1827	20965	2-M4-003 - Secretarial Office	Brookfield Multiplex			Walls: Paint shy around light switch .Feature wall poor paint work.
1828	20960	2-G2-004 - Dirty Equipment	Brookfield Multiplex			Walls: Paintwork around IPS and danicentre needs tidying up.
1829	20946	G-Z1-001 - Stair 01				Tear in floor finish to upstand - see attached.
1830	20969	2-M4-007 - Quiet Room	Brookfield Multiplex			Door : door frame needs repaired and tidied up and needs painted.
1831	20953	Entrance Plaza				Fresh cracks in block paviors - see attached.
1832	20646	B-S1-010 - M Staff Changing/Shower				Paint finish poor on architrave - see attached.
1833	20846	DCN Entrance				Stains to paviors at DCN entrance - see attached.
1834	20847	DCN Entrance				Cracked paviors - see attached.
1835	20850	1-Z1-002 - Stair 02				Bubble on flooring at half-landing up to second floor - see attached.
1836	20851	RHSC Entrance Canopy				Internal angle to draught lobby is unsealed - see attached photos.
1837	20868					Ventilatin bellmouths not installed as drawn, to point down
1838	20864	2-L2-125 - Single Bed 4 (Adult)				Clock broken and needs replaced
1839	20869					lifts 1-3 lobby - 1-COR-013 corner protection fitted but badly finished
1840	20870	2-COR-010 - Corridor				corner protection not fitted
1841	20871	2-COR-003 - Corridor				corner protection fitted but not heavy duty and no cap unlike other corner protection in corriors
1842	20872					lift 1-3 lobby 3-COR-015 corner protection missing
1843	20874	3-COR-014 - Corridor				corner protection missing at corner of 3-C1.4-082
1844	20873					corner protection missing 3-COR-001
1845	20887	1-P1-053 - Staff Room	Brookfield Multiplex			The clock arms are broken and sitting in the base of the clock.
1846	20897	VIE Enclosure	Piped Services	Medical Gas	Access Restrict for Maint.	Oxygen service pipe and alarm cable obstruct emergency exit route and free movement around enclosure, please rectify urgently as this increases risk to operators during filling and maintenance.
1847	20881	2-L2-143 - Ensuite 1	Brookfield Multiplex			Toilet Signage on wrong side of door.
1848	20860	2-M3-003 - Treatment Area				Curtain rail was shifted and where it was moved from, the wall has not been painted.
1849	20747					External cill within area 1-RF-002A has been damaged - see attached.
1850	20731					External door into courtyard (opposite riser cupboard 1-T2-016) requires decoration brought forward on wall finish - see attached.

1851	20651	B-Z1-003A - Stair 03				Stair basement half-landing - unfinished - see attached.
1852	20686					Flooded roof pan - see attached. Outlets show evidence of spent materials and fixings. Roof membrane needs cleaned.
1853	20689	4-S7-010 - Restaurant				Coffee Bar Area - excessive play in glass splash guard. See attached.
1854	20666	2-Z1-004 - Stair 04				Door reference - reference not centred on disc - see attached.
1855	20670	G-COR-001 - Atrium				Poor finishing - see attached.
1856	20673	' - Sub Waiting Area (incl supervised play) with Nurse Base				Poor decoration at grille - see attached.
1857	20653	B-Z1-003A - Stair 03				Floor finish cut short to underneath stairs - this will be an issue in routine regular cleaning - see attached.
1858	20654	B-Z1-003A - Stair 03				Mastic seal missing to both sides of stair - risers and goings - see attached.
1859	20632	2-T2-018 - Riser	Ventilation	Ductwork	Misc	Fire rated duct work has been installed to a poor standard
1860	20637	4-S7-010 - Restaurant				Area within coffee bar - floor not finished / sealed for hygienic purposes under counter - see attached.
1861	20616	Entrance Plaza				Chipped kerb logs - see attached.
1862	20606	G-Z1-012 - Stair 9				Stair 9 landing - missing sealant - see attached.
1863	20615	3-Z1-004 - Stair 04				Secret missing (assumed popped out) from stair nosing. Check all nosings to ensure they are seated properly and not moving.
1864	20595					Service Yard - Area at RC retaining wall - joint unfilled / dropped - see attached.
1865	20592					Stair 9 lobby area - sealent required to floor/skirting interface - see attached.
1866	20526	G-Y1-008 - Bottle Store				fill in access around pipe into manifold room
1867	20571	B-Z1-002 - Stair 02				Mastic needed to risers and goings - see attached.
1868	20511	2-Z1-002 - Stair 02				Bossed floor in at least two areas - see attached.
1869	17995	G-X1-001 - EC: Plant Room 1				Damage to concrete plinth - see attached photo.
1870	20408	All Rooms MPX	Brookfield Multiplex			Ground floor, Orange Zone, All rooms. See pdf attached for snags locations
1871	20410	All Rooms MPX	Brookfield Multiplex			Ground floor, Orange Zone, All rooms. See pdf attached for snags locations
1872	5646	G-A2-067 - Single Bed 3	Piped Services	Medical Gas		Unistrut support buckled.
1873	18001					Area of zone A link bridge - see attached photo. Please ensure heights are compliant throughout the length of protection.
1874	19664	G-X1-001 - EC: Plant Room 1	alist Equipment & 3rd Fix Items			Fuel oil pooling on floor adjacent to valves on fuel lines supplying Boiler 2.
1875	19954	G-X1-001 - EC: Plant Room 1	Piped Services			the valve on the pipework going to the CHP and gas booster set is inaccesable safely. Steps can't be used as theis would take us above the edge protection a safe solution for access is required.
1876	19210	G-F1-026 - Large Family Interview Room	Envelope	Window	Misc	Water ingress at window. See photo
1877	20263	1-P1-142 - Corridor				Corner protection to wall ends and protrusions have not been fitted with a capping piece which presents an infection control issue.
1878	18602	G-CT-008 - Bereavement Garden	Roof	Rainwater Gutter	Misc	Feature roof appears to be complete but white painted finish of rainwater gutter seems to be corroded in places.
1879	20299	4-S7-008 - Storage / Dishwashing				This is not the correct fixing screw can we have the correct screw and cap fitted
1880	20325	1-P1-037 - Corridor				Poorly fitted finishing trims on expansion joints.
1881	20308	1-D6-053 - Rehab Room (Physio)				Wall mounted climbing bars not properely secured.
1882	20311	1-D6-023 - Reception (2 Person)				Reception desk hinged door and countertop likely to be damaged due to lack of stops.
1883	20463	B-PLANT-005 - Plant Room 15	Acoustic / Fire Stopping	Fire Stopping	Missing	Fire stopping missing to substation. See photo
1884	20317	1-P1-141 - Anaesthetic Room 5				Safety device on powered door failed to operate when obstructed.
1885	18987	1-B1-044 - IPS Room	Door	Door	Damaged	Door from corridor into IPS room is damaged at the foot of the door on the opening edge at DB/E2/1/LP2 side inside IPS Room 2.
1886	8828	G-X1-001 - EC: Plant Room 1	Low Voltage	Lighting		Clip not fixed on light correctly
1887	8829	G-X1-001 - EC: Plant Room 1	Low Voltage	Lighting		Clip missing or not fitted correctly on vapour proof fitting
1888	8933	2-COR-005 - Corridor	Low Voltage	Electrical General Installation	Misc	Basket appears over filled. Fire alarm cable clipped external to basket with cable ties.
1889	11075	G-A3-005 - Switch Cupboard	Low Voltage	LV DB's / Plantrooms		IPS panel J has several dents to the right hand side also lock moulding has damage consistent with not using correct key to open

1890	16215	G-X1-002 - EC: Plant Room 2	Low Voltage	LV DB's / Plantrooms		The front of the Edina CHP control panel has been damaged.
1891	16383	1-T2-005 - Riser	Low Voltage	Electrical General Installation	Misc	Cleat supporting B1/4 SWA cable above Canalis KSB400DC4 is too large a diameter.
1892	16843	G-F1-044 - 1:1	Containment	Trunking	Lid not fixed on correctly	Trunking lid above plasterboard ceiling not fitted correctly.
1893	16868	G-D5-010 - Surgery (standard)	Low Voltage	Electrical General Installation	Misc	SWC1001 NONE ENGRAVED
1894	16922	2-PLANT-001 - Theatre Plant Room	Low Voltage	LV DB's / Plantrooms		Two cheese head machine screws securing the upper part of the opening doors section of the right hand side of Section Board PE 2/2 have had their heads snapped off.
1895	16925	G-A1-001B - Corridor	Low Voltage	LV DB's / Plantrooms		Bottom of Section Board E2/G is not fitting correctly and seems to be bashed. One of the attached photographs has been taken from below in room B-T2-005, riser E2, Level B1, Zone 4.
1896	16823	G-X1-001 - EC: Plant Room 1	Piped Services	Heating	Brackets Incorrect Distance	Copper tube to flow transmitter adjacent to Boiler 3 has not been fixed; it is free to move. It is presently vibrating in sympathy with the pumps running. The copper may work harden in time and snap.
1897	16822	G-X1-001 - EC: Plant Room 1	Piped Services	Heating	Misc	Installation of copper pipe to differential pressure is disappointing. The bends in the copper tube have not been formed using a pipe bender causing the tube to collapse. The tube is incredibly badly supported throughout the length of it's run. Cable ties have been used instead of clamps or cleats.
1898	18116	G-X1-001 - EC: Plant Room 1	Piped Services	Heating	Misc	Guage damaged requires renewal
1899	18196	2-PLANT-001 - Theatre Plant Room				DB5 gas pump no1 brackets loose on verticle pipe and inserts missing at high level
1900	18197	2-PLANT-001 - Theatre Plant Room				Rodding access at high level above Ahu 02/25 not accessible as cap is hard against duct
1901	18210	2-PLANT-001 - Theatre Plant Room				Roddng access above Ahu 02/17 not accessble
1902	2985	G-D8-001 - Open Plan Office	Ventilation	Ductwork	Misc	
1903	5644	G-J2-004 - WCH / Ritual Wash	Ventilation	Ductwork	Damaged	Fire rated duct damaged. Also query inappropriate attempted repair.
1904	18754	2-L2-150 - Switch Cupboard	Low Voltage	Electrical General Installation	Misc	SWA cable supplying DB/E2/2/LP4 is insufficiently cleated from where it leaves the cable tray to where it is glanded into the DB.
1905	18837	G-F1-060 - Corridor	Low Voltage	Electrical General Installation	Access Restrict for Maint.	Safe access to front cover of lighting and small power "home-run" box is not possible from nearest hatch in plasterboard ceiling.
1906	18838	G-F1-060 - Corridor	Low Voltage	Electrical General Installation	Access Restrict for Maint.	As in other cases in the same corridor, safe access to front cover of lighting and small power "home-run" box is not possible from nearest hatch in plasterboard ceiling.
1907	19163	G-X1-001 - EC: Plant Room 1	Piped Services			Water dripping from RPZ valve into green plastic bucket at AquaTech Press main SB7-35 Pressurisation Unit adjacent to door leading into B-X1-010 corridor.
1908	19700	2-PLANT-001 - Theatre Plant Room				Doors into Plant Room C do not close properly - see attached image.
1909	19720	2-COR-003 - Corridor				Missing areas of fire stopping above finished ceiling - see attached photo. Area is interface with 2-S2-001.
1910	19719	2-COR-003 - Corridor				Crash rail section is missing end cap to RHD of riser doors - see attached photo.
1911	20107	2-M4-021 - Switch Cupboard				Cable breached fire stopping - see attached photo.
1912	19686					Missing rib off barrier matting into second floor courtyard next to area GR-02-01. See attached image.
1913	19611					External Courtyard - see attached. The grass appears to be dyingin need of watering/maintenance.
1914	20094	1-P1-117 - IPS Room				This room is wrongly labelled, it is an electical cupboard, not IPS room.
1915	19258					Floor screed ill prepared - see attached photo.
1916	20213	G-F1-019 - Forteviot Play Room				Internal and external angle interfaces require to be sealed and weatherproofed. See attached images.
1917	19275					Link corridor through to resus and lobby area (two areas) interfacing with the RIE. The flooring selction is incorrect as these are technically Conosrt owned areas. The areas have been finished in the wrong material finish and colour - see attached photo.

1918	20142					Oncology Courtyard - light out. See attached.
1919	20241	4-PLANT-004 - Plant Room 05				Floor rises to gully in middle of room
1920	20141	G-CT-004 - PARU Garden				Surface corrosion evident on a large number of garden furntiure items e.g. seats, benches, tables etc. See attached images.
1921	20134	4-R1-020 - Corridor				Faulty window just off gridline M08 - window is itself catching on ingoe when opened.
1922	20180					First floor viewed from PARU Garden - various areas requiring attention on attached images.
1923	19880					First floor link bridge corridor - impact damage to head of access door. See attached images for details.
1924	20005	G-I1-005 - Enquiry/Information Desk (2 Person)				Letters affixed to wall finish appear to be damaged and/or paint marks. See attached photo.
1925	20159	VIE Enclosure				Various observations in and around the VIE - see attached.
1926	20139					General observation for all openable windows - catch mechanism requires to be lubricated. See attached image.
1927	19613	G-X1-002 - EC: Plant Room 2	Piped Services	Heating		heat rejection plant for CHP all coils require cleaning and combed with finn comb as fins are damaged, requires securing to base, access over pipes required cabling issues, fan access for removal. Photos are examples a full examination is required at the plant to see all.
1928	19465	Hospital Square				One failed tree outside the Anne Rowling building - see attached image for location.
1929	20354					Attached is a mark up of the remaining defects for level 02 ortange and green.
1930	20506	All Rooms MPX	Brookfield Multiplex			A:Sto-Ventec Elevation B:Delivery Yard C:Energy Centre A1. Mesh for birds at low level A2. Additional Stone A3. Edging for Grass/Stone A4. Stone Picking B1. Compactor White Lining B2. Additional power for laundry taillift B3. Stop line for vehicles B4. height join to overhang at flues C1. Ladder access to boilers C2. Tool/Plant access to mezzanine C3. trip covers to boiler condonsate pipes C4. condensate neutralizer C5. grating floors to both large cable pits
1931	20343	3-C1.2-018 - Single Bed 2				Window surround cracked - see attached image.
1932	20424	G-Y1-008 - Bottle Store				Incomplete drain install - see attached.
1933	20319					Dry riser compartment requires to be cleaned. Comprtment door missing lock and blanking plate.
1934	20306	1-D1-013 - Clean Utility				Controlled drug cupboard alarm microswitch not connected.
1935	20456	G-Y1-008 - Bottle Store				Sleave, seal and firestop pipe penetration in wall. See attached.
1936	20445	G-Z1-012 - Stair 9				Damage to door - see attached.
1937	20452	G-Z1-012 - Stair 9				Stair 9 missing mastic seal - see attached.
1938	20451					Clean up and de-burr holes in the attached typical example as this is a hazard in the cyclical cleaning of the windows - see attached.
1939	19522					Office next dor to Echocardiograph lab - unwanted expansion / movement in facings. See attached photos.
			Service	**Category**	**Item**	
1940	n/a	Zutec Commissioning sections	Internal & External Lighting	6.4 Commissioning Certificates	Illuminance Report	Current Status Offered For Review - Contractor. Multiplex to review and confirm approval to allow IT close out.
1941	n/a	Zutec Commissioning sections	Oil Fuel	6.4 Commissioning Certificates	Oil Pumps	Current Status Offered For Review - Contractor. Multiplex to review and confirm approval to allow IT close out.

1942	n/a	Zutec Commissioning sections	Water Services	6.4 Commissioning Certificates	Booster service reports	Current Status Offered For Review - Contractor. Multiplex to review and confirm approval to allow IT close out.
1943	n/a	Zutec Commissioning sections	LTHW	6.4 Commissioning Certificates	Boiler 1 Commissioning Cert	Confirmation that all issue items noted on the commissioning report have been completed
1944	n/a	Zutec Commissioning sections	LTHW	6.4 Commissioning Certificates	Boiler 2 Commissioning Cert	Confirmation that all issue items noted on the commissioning report have been completed
1945	n/a	Zutec Commissioning sections	LTHW	6.4 Commissioning Certificates	Boiler 3 Commissioning Cert	Confirmation that all issue items noted on the commissioning report have been completed
1946	n/a	Electrical HV rooms	Electrical		Mimic Diagram	Provide written confirmation that the electronic mimic diagram provided is fully in compliance with the requirements as advised by the it in his mail dated 7th February 2019 and then issue.

Proportions	Value categories	Nr.	Value	Value totals
88%	Low value	1712	£ 50.00	£ 85,624.00
11%	Medium value	214	£ 250.00	£ 53,515.00
1%	High Value	19	£ 2,500.00	£ 48,650.00

Totals	1946	Total Value of snagging	£ 187,789.00

Specification Check / Revision Sheet

Project	**RHSC and DCN Edinburgh Hospitals**	Project Number	**G1547**
Service (s)	**Mechanical & Electrical**	Sheet	**WW AP.1.2.4 SMcK G1547**
Performance Specification Title	**Specification for Ventilation Systems**	Date	**August 2014**
Prepared By	**BR**	Checked By	**SMcK**

Revision Ref.	Date of Revision	Page N$^{o(s).}$	Revision Details	Checked By
FT	December 2013	All	Final Tender	SMcK
FC	July 2014	All	Update for Financial Closure	SMcK
FC	August 2014	All	Comments Incorporated	SMcK

RHSC and DCN EDINBURGH
VENTILATION SYSTEMS

CONTENTS

1.0	GENERAL INTRODUCTION
2.0	SCOPE
3.0	SPECIFIC EXCLUSIONS
4.0	INTERFACES AND DEMARCATIONS
5.0	APPLICABLE STANDARDS
6.0	DESIGN CRITERIA
7.0	LIAISON
8.0	SYSTEM DESCRIPTION

MATERIALS AND WORKMANSHIP CLAUSES

U10	VENTILATION SYSTEMS
U41	FAN COIL UNITS
U60	LOCAL AND ROOM AIR CONDITIONING SYSTEMS
U80	AIR DUCTWORK AND ANCILLARIES
U81	AIR HANDLING UNITS
U82	FANS
U83	AIR FILTRATION
U84	HEATING AND COOLING COILS
U85	HEAT RECOVERY
U86	AIR TREATMENT
U87	SILENCERS AND ACOUSTIC TREATMENT
U88	AIR TERMINAL DEVICES

1.0 GENERAL INTRODUCTION

Purpose of Document

The manufacture, supply, installation, wiring, setting to work and commissioning of the works described in this document shall be undertaken by the Mechanical and Electrical Installer and is referred to in this document as “Project Co”.

To carry out the development of the design, The Specialist shall obtain the necessary supporting documentation.

This specification shall be read in conjunction with all other mechanical and electrical engineering services specifications and the Architectural drawings.

This specification relates to the Ventilation System serving the RHSC/DCN and associated Energy Centre.

Description of Project

The new facility shall re-provide services from the Royal Hospital for Sick Children, Child and Adolescent Mental Health Service and the Department of Clinical Neurosciences in a single building adjoining the Royal Infirmary of Edinburgh at Little France.

The DCN part of the Facilities will have a physical link with the existing RIE Facilities specifically with the critical care unit.

The building is generally constructed from reinforced concrete.

The basement houses FM support facilities and the main building services heat distribution centres and electrical plant rooms.

Ventilation plantrooms are generally located at roof level and level 2.

A central Energy Centre shall be provided to the South of the hospital housing heating, CHP, standby generation, fuel storage and utility incomers.

2.0 SCOPE

The scope of work covered by this Specification shall include the following:-

- Ventilation System, including:-
    1. Kitchen extract equipment
    2. Fan coil units
    3. Local air conditioning systems
    4. Air ductwork and ancillaries
    5. Air handling units
    6. Fans
    7. Air filtration
    8. Heating and cooling coils

9. Heat recovery
10. Air treatment
11. Silencers and acoustic treatment
12. Air terminal devices

3.0 SPECIFIC EXCLUSIONS

The following is specifically excluded from the scope of this Specification:-

- BMS and automatic control systems
- Insulation
- Louvres in external façade
- Kitchen canopies/hoods

4.0 INTERFACES AND DEMARCATIONS

The Ventilation Systems shall be provided as a complete working system serving the RHSC-DCH building.

Project Co. shall provide information to other parties for power supplies, controls and fire alarm system interfaces.

5.0 APPLICABLE STANDARDS

All elements of the works shall be in accordance with the requirements of current legislation, regulations and industry standards unless otherwise stated.

The Ventilation System shall accord with all appropriate Hospital Technical Memoranda, Codes of Practice and relevant British and European Standards.

The equipment supplied shall conform to all relevant standards and regulations in force. The equipment shall be supplied with relevant Declarations of Conformity to certify compliance with the EMC directive 89/336/EEC-92/31/EEC and the Machinery Safety Directive 89/392/EEC-91/368/EEC-93/44/EEC. Also the equipment and installation shall comply with all relevant statutory requirements in force at the time:

6.0 DESIGN CRITERIA

LV power characteristics: 400/230 V, 3-phase, 50 Hz, 230 V, 1-phase, 50 Hz.

External Design Conditions	
Winter	-6oC sat
Summer	26oC db 19oC wb
Sizing for refrigeration plant	30oC
LTHW Flow Temperature	80°C

LTHW Return Temperature	60°C
Primary Chilled Water Flow Temp	6°C
Secondary Chilled Water Return Temperature	12°C

For ventilation/air change rates used in the design, Project Co. shall refer to the ADB sheets.

7.0 LIAISON

Project Co. shall include for liaison with:-

Health and Safety Professionals. As well as the Health and Safety requirements of this specification, Project Co. shall include for close liaison with Health and Safety professionals including the Hospital's Health and Safety Advisors and the CDM Co-ordinator and shall comply with the CDM Regulations and all Health and Safety Regulations.

Specialist Installers. Project Co. shall liaise with other specialist parties as necessary to ensure that all interfaces and co-ordination between the Fire Detection and Alarm System and other systems are allowed for. This shall include but not be limited to:-

- Building Management System specialist
- Fire Alarm and Detection specialist
- Other disciplines for co-ordination
- Fire Protect Systems specialist
- Kitchen Specialist

Building Control. Project Co. shall liaise, with and adhere to, the requirements of the Building Control Officer.

Any other member of the Project and Board teams concerned with the planning and administration of the Ventilation System.

8.0 SYSTEM DESCRIPTION

The mechanical ventilation and air conditioning systems shall comply with HVAC DW144, 154, 172, TR19, BS 5726 (updated) SHTM 03-01, and descriptions and requirements set out below.

8.1 Background to Ventilation and Air Conditioning Installations

The building is largely sealed with limited openable windows in order to control the internal environment within the spaces.

The building ventilation is based on a mixed mode solution where it permits, utilising openable windows together with mechanical vent and a peak lop cooling solution.

The Hospital shall be mechanically ventilated:-

- Throughout all internal rooms that have no access to natural ventilation
- Perimeter areas where mechanical ventilation is required for clinical reasons
- Perimeter areas where mechanical ventilation is required for operational and environmental control reasons
- Deep plan perimeter areas where necessary to assist the natural ventilation
- Ward areas throughout

The various departments to match their function shall be served by a number of ventilation air handling systems.

In general, each air handling system shall be served by packaged air-handling units containing all components necessary (e.g. fans, coils, filters, etc.) to provide the correct environmental control of those spaces/rooms served.

Fan coil units shall also be provided for comfort cooling in areas where there is a need for separation or where high heat gains make these a more appropriate choice of systems.

Various types of room are included within this project and are described elsewhere. These are:-

- Wards
- Isolation rooms
- Outpatient type departments
- Operating theatres
- Critical care departments
- Comfort cooled areas (e.g. diagnostic imaging)
- Catering facilities
- Safety cabinet extracts
- Computer rooms and data hub rooms

Fan Motors

All fan assemblies shall incorporate fan impeller and motors selected to provide the most energy efficient solution conforming to Section 6 regulations and shall be fitted with IE2 efficiency motors to EN 60034-30:2009 as standard, and suitable for operation in ambient temperatures of 40 degrees C.

System Resistance

The carbon target of 80kg/m^2 per annum requires that, for example, system pressure loss is limited to reduce fan power.

The detailed design calculations for fan resistance have been based on assumed pressure drops through in-line components which are stated in the specification or equipment data sheets. ’s selection of components shall ensure that the pressure drop of a component does not exceed that assumed in the calculations. shall also take care in finally detailed the ductwork routes to avoid potential causes of high pressure drop that may have a detrimental effect on ultimate fan performance. Upon completion of ’s installation drawings shall recalculate the whole system pressure drop, including all components to verify that the design calculated pressure drop has not been exceeded. For the purposes of calculating the system resistances the following allowances have been made in the figures in the equipment schedules:

System performance

Project Co. shall supply and install services and equipment to perform as per specification.

Project Co. shall submit details of all mechanical equipment for comment and place orders in a timely fashion to ensure delivery as per programme.

Grille	25 Pa
Dampers	20 Pa
Heater Battery	20 Pa
Louvre	25 Pa
Plant Room Attenuator	50 Pa
Cross Talk Attenuator	25 Pa
Cowl	50 Pa
HEPA Filter	450 Pa

All rectangular radiused bends: r/w = 0.5
All circular radiused bends: r/d = 1

Where a particular manufacturer is specified, Project Co. shall include for that manufacturer.

Where considered appropriate, equivalent standard alternatives shall be offered for consideration.

This shall be done in a timely manner and Project Co. shall provide all details including but not limited to:

- Detailed description
- Cost comparison
- Technical comparison
- Thermal comfort comparison
- Carbon emission and energy usage comparison
- References to standards
- References to SHTM/HTMs

Completion

Project Co. shall protect the system from damage or interference during the works.

Project Co. shall test, and clean the system as per TR/19.

Project Co. shall submit O&M and record information via Zutec.

Project Co. defects and liability period shall be as the contract prelims.

940 OPERATING TOOLS

- Tools: Supply tools for operation, maintenance and cleaning purposes.
  - Quantity: 2 sets.

U10 VENTILATION SYSTEMS

ALL AIR SYSTEMS

These shall be low velocity systems with air being distributed throughout the building in galvanised sheet steel ductwork via ceiling voids and riser duct spaces terminating in ceiling or wall diffusers as appropriate.

On full fresh air systems, heat recovery devices shall be provided, to exchange heat between exhausted extract air and incoming fresh air wherever significant energy savings can be achieved.

Generally, temperature control shall be by means of room or duct-mounted sensors which shall operate, via the automatic control system software the control valves on the hot water and chilled water to the heating and cooling coils respectively.

Areas shall be controlled in zones or as individual rooms as necessary to achieve the conditions required by the ADB Sheets.

Supply plants shall incorporate panel type coarse pre-filters followed by high efficiency bag filters. Absolute HEPA (high efficiency particulate air) terminal filters shall be provided only for ‘ultra clean’ areas such as UCV Theatres for Orthopaedic and Neurosurgical and isolation rooms. Some isolation rooms shall incorporate HEPA filters on the extract system.

Within relevant air handling units, blank sections shall be included for future provision of full humidity control, including humidification and dehumidification in critical care clinical areas, such operating theatres, recovery, radiology and MRI Scanner or wherever close control of humidity is required for the successful operation of sensitive equipment, e.g. computers, as advised by the ADB Sheets.

Air pressure regimes for theatre suites shall be designed in accordance with the guidance provided in SHTM 03-1 employing wall mounted pressure stabilisers.

Air volumes have been established by consideration of heat gains or losses and also the air change rate necessary for comfort and safety as appropriate for the activity carried out in each area. Relative air pressures between rooms shall be maintained to suit the activity concerned, by design of the supply and extract air volumes, and use of pressure relief equipment where necessary to prevent cross infection or transfer of unpleasant odours between areas, as required by the ADB sheets.

Heat recovery shall be provided between the supply and extract systems. The hospital ventilation systems shall be in accordance with SHTM 03-01 Ventilation in health care premises, DW 144 and DW 143.

The ventilation system including all AHU's, fan's, diffusers, dampers and grilles shall meet the design noise and vibration criteria.

The ventilation and cooling system shall be zoned with each air handling system being served by packaged air-handling units containing all components necessary (e.g. fans, coils, filters, etc.) to provide the correct environmental control of those spaces/rooms served.

The philosophy of the system is to provide energy efficient operation with areas of the hospital operating on a similar time and clinical nature being served from the same system, and to maintain a sensible level of availability, such that in the event of plant breakdown or maintenance, limited areas of ventilation are lost. Air handling plants shall have availability reinforced by the provision of duplicate motors or fans, which shall automatically changeover to maintain the ventilation requirements.

Project Co. shall take care in finally co-ordinating the ductwork routes to avoid potential causes of high pressure drop that will have a detrimental effect on ultimate fan performance.

All ventilation controls shall be capable of being fully interrogated by the building management system through the independent network protocol.

WARDS

The ventilation systems serving ward areas shall provide treated air to internal spaces, clinical spaces and make-up air for sanitary accommodation.

Make up air for en suite WC accommodation shall be introduced directly into the associated bedroom at suitable temperature to maintain the required space temperatures.

Air shall be extracted from spaces by either the clean or dirty extract systems as appropriate. Heat recovery shall be provided between the supply and extract systems. The type of recovery system employed shall depend on the area being served. Refer to system drawings and schedules for details.

The ventilation plant shall use different facades of the plantroom for intake and exhaust air via vertical wall louvres. This strategy will avoid short circuiting or contamination of the supply air and also meet the BREEAM requirement for separation. Project Co. shall exercise caution when locating any other extracts or gas scavenging exhaust to ensure the supply intakes are not contaminated.

ISOLATION ROOMS

Each lobbied isolation room shall be provided with its own dedicated ventilation system in line with SHBN 04.

Each system ventilation plant shall filter, heat and cool the air and supply it to the room lobby at the required temperature, as dictated by a sensor in the bedroom.

Air shall be transferred to the room via a wall mounted pressure stabiliser and then extracted from the suite via the bedroom and en suite WC, and ducted by fire-clad ductwork to a dedicated extract fan in the plantroom.

Each extract fan unit shall comprise of an isolation damper and a centrifugal cased extract fan, with the motor located out of the air stream, and the exhaust duct shall discharge 3.0 metres above roof level. Were it is not possible to achieve a safe discharge height of 3.0 metres above roof level. The extract air shall be HEPA filtered through ‘safe change’ filter units in the plantroom before being discharged to atmosphere with all other ventilation exhausts.

Due to the small size of the plants, heat recovery is not considered viable and shall therefore not be provided.

Isolations rooms supply air terminals shall be capable of having terminal HEPA filters fitted at some future date. The air handling unit fan shall be capable of overcoming the additional resistance imposed by the HEPA filter by a simple speed change on the motor inverter.

OUTPATIENT TYPE DEPARTMENTS

The ventilation systems serving outpatient areas shall provide heated air to internal spaces, clinical spaces and make-up air for sanitary accommodation.

Radiant panels shall generally be installed to individual spaces to provide independent control of heating and comfort cooled fresh air for cooling requirements.

Air shall be extracted by clean and dirty extract systems.

Heat recovery shall be provided between the supply and extract systems.

OPERATING THEATRES

Each operating theatre shall be provided with a dedicated ventilation system.

Each system ventilation plant shall filter, heat and cool the air and supply it to the suite of rooms, and be arranged to allow individual temperature set point adjustment with this indicated on the associated surgeon's theatre panel.

The pressure regimes between the spaces in each theatre suite shall be maintained by a combination of supply and extract rates to each space, and pressure stabilisers located in the walls.

Heat recovery shall be provided between the supply and extract systems. Out of hours setback shall be provided by reducing the air volumes and temperature set points.

In theatres with a requirement for Ultra Clean Ventilation (UCV), a specialist shall be employed to undertake the provision of the UCV canopy in accordance with SHTM 03-01.

Ancillary areas associated with the Operating Theatre department shall be served from a dedicated plant.

CRITICAL CARE DEPARTMENTS

Critical care departments such as ITU/HDU shall be provided with dedicated ventilation systems.

The supply air ventilation plant shall heat and cool the air as required by the control system to provide the correct condition in the various rooms/zones.

Final temperature control to the spaces shall be achieved by terminal reheaters controlled from user adjustable sensors within each space. Heater batteries shall be located wherever possible in plant areas, but where heaters can only be provided in the ceiling void of the occupied space they shall be located away from patient occupied spaces, i.e. bed spaces.

Heat recovery shall be provided between the supply and extract systems.

COMFORT COOLED AREAS

Departments where space temperature control is required, such as the Emergency Centre, Diagnostic Imaging, etc. cooling shall be provided by treated air to clinical spaces and spaces with high equipment gains.

The department shall be arranged in a number of zones to suit the control requirements, varying heat gains and use of the spaces.

Particular areas that have high-density heat gains shall be provided with terminal cooling in the form of fan coil units to achieve the required space conditions.

The supply air ventilation plant shall heat or cool the air as required by the control system to provide the correct condition in the various rooms/zones.

All AHU's and fans shall be suitable for hospital application.

SAFETY CABINET EXTRACT SYSTEMS

The Laboratories shall be served by separate extract systems serving the general areas whilst extracts from safety cabinets shall be handled by individual contaminated extract systems.

The design of the general extract system shall be co-ordinated with the associated supply system and contaminated extracts to maintain suitable pressure levels.

QUENCH PIPES

The Quench pipes serving the MRI machines shall be installed by in accordance with a design and specification produced by the MRI supplier/installer. The route of the pipes shall be as shown on the drawings and they shall be insulated and terminate in accordance with the recommendations given by the MRI supplier/installer. The Quench pipes are required to be continuous and therefore the pipe structure and insulation shall maintain the required 2 hour fire integrity.

130 MECHANICAL SUPPLY VENTILATION SYSTEM

Supply air from central air handling plant shall be delivered through the ductwork systems to the areas served, and discharged via ceiling mounted diffusers.

Supply and extract air handling plants shall be of a packaged construction with a double skin casing complete with thermal/acoustic insulation material between the two skins. Units shall house filters, coils, fans and motorised inlet dampers, etc. Heat recovery devices and humidifiers shall also be incorporated where required. External fan motors shall be provided to all units with some units types having twin motors.

All AHU's and fans shall be suitable for hospital application.

- Location of plant: Various locations throughout the building.
- Type of system: Multizone, constant volume.
- External air intake terminals: Architectural louvres.
- Air filters: In air handling units, as section U81.
- Accessories: As schedule.
- Heat recovery: In air handling units, as section U81/U85.
- Air handling units: As section U81and schedules.
  - Fabrication: Construction, as section U81.
- Supply fans: As schedule.
- Acoustic treatment: Rectangular silencer, as section U87.
- Air ductwork and ancillaries: Ductwork, Fire rated and smoke extract ductwork and fittings as section U80.
  - Accessories: Dampers, fire and smoke, metal ductwork, as section U80.
- Thermal insulation on supply air ductwork: As section Y30.
- Vibration isolation mountings: Spring isolators, as section Y31.
- Reheat batteries: As schedules and drawings.
- Room supply air terminal devices: Grilles and diffusers as specified.
- Controls: All ventilation controls must be capable of being fully interrogated by the building management system through the independent network protocol.
- Completion:

  - Identification of ductwork and equipment: As section Y32.
  - Testing and commissioning:
  - Ductwork pressure testing, as section U80;
  - Air distribution system commissioning, as section Y50; and
  - Performance testing, as section Y50.

140 MECHANICAL EXTRACT VENTILATION SYSTEM

Extract air from the area concerned shall be drawn through a ductwork system to extract fans in the roof plantrooms for discharge to atmosphere, or returned to the air handling plant for recirculation.

- Room extract air terminal devices: As drawings.
- Air ductwork and ancillaries: Fire rated and smoke extract ductwork and fittings, as section U80 and Smoke extract ductwork, as section U80:
  - Accessories: Dampers, fire and smoke, metal ductwork, as section U80 and Flexible ductwork, as section U80.
- Thermal insulation on extract air ductwork: As specified.
- Vibration isolation mountings: Spring isolators, as section Y31.
- Heat recovery: Plate recuperator, as section U85 or thermal wheel, as section U85 depending on AHU type.
- Acoustic treatment: Rectangular silencer, as section U87.
- Extract fans: The extract fan shall have twin motors depending of fan type.
- External exhaust air terminals: Architectural louvres
- Controls: All ventilation controls must be capable of being fully interrogated by the building management system through the independent network protocol.
- Completion:

  - Identification of ductwork and equipment: As section Y32.
  - Testing and commissioning:
  - Ductwork pressure testing, as section U80;
  - Air distribution system commissioning, as section Y50; and
  - Performance testing, as section Y50.

150 TOILET EXTRACT VENTILATION SYSTEM

Potentially contaminated dirty air extract systems shall be discharged at, or above, roof level.

Dirty extract shall be provided to extract air from toilets, bathrooms, cleaners' rooms and dirty utility areas. Extract plants shall be separate extract fan units.

Air shall be extracted via grilles in the individual rooms and ducted by galvanised sheet steel ductwork similar to that provided for the general supply and extract systems to extract fans in the plantrooms. Make up air shall be via the main ventilation system.

Separate dirty extract units shall be manufactured heavy gauge aluzinc corrosion resistant steel. The general construction is to Class A leakage.

The fan unit shall be supplied complete with all manufacture control accessories to be fully integrated into the BMS.

The fan unit shall be provided with an integrated commissioning/speed control to accurately commission the system. The commissioning set up facility directly controls the integrated speed control/frequency inverter.

Heat recovery shall be used for the larger dirty extract systems.

Where toilets or bathrooms are in isolated positions, not convenient to central ducted systems, small units operated by light switch control shall be used

- Room extract air terminal devices: Air transfer grilles and diffusers, as specification.

- Air ductwork and ancillaries: Sheet metal ductwork and fittings, circular, as section U80 and Sheet metal ductwork and fittings, rectangular, as section U80:
  - Accessories: Dampers, fire and smoke, metal ductwork, as section U80 and Flexible ductwork, as section U80.
- Thermal insulation on extract air ductwork: Not required
- Vibration isolation mountings: Spring isolators, as section Y31.
- Acoustic treatment: Circular silencer, as section U87 and Rectangular silencer, as section U87.
- Extract fans: Twin Toilet extract fans run and standby, as section U82.
- External exhaust air terminals: Architectural louvres.
- Controls: All ventilation controls must be capable of being fully interrogated by the building management system through the independent network protocol.
- Completion:

  - Identification of ductwork and equipment: As section Y32.
  - Testing and commissioning:
  - Ductwork pressure testing, *as section U80;*
  - Air distribution system commissioning, as section Y50; and
  - Performance testing, as section Y50.

160 KITCHEN EXTRACT VENTILATION SYSTEM

Ventilation to the central catering areas shall be provided to deal with the requirements on the cooking equipment to reduce odours and limit temperatures within the space.
Contaminated air extract systems shall be discharged at, or above, the roof level at high velocity as appropriate.

Ventilation make-up air shall be provided to balance the extracted air.

There shall no recovery from kitchen hood extract due to the difficulties with grease laden air.

The kitchen canopies shall be supplied and installed by the kitchen specialist and do not form part of these works. Project Co. shall liaise with the kitchen specialist, so as to agree requirements. All the main kitchen extract hoods to be the capture/entrainment type. This type of canopy entrains the contaminant air by supplying fresh air over the kitchen island. This shall reduce extract air flow rates and hence save energy. The hoods and supply air shall also have a set back position when the kitchen is not in use. This shall reduce air flows when the kitchen is not in use and reduce energy consumption

- Air ductwork and ancillaries: Fire rated and smoke extract ductwork and fittings, as section U80. All kitchen extract systems to DW172:
  - Accessories: All kitchen hood extract ductwork to be fire rated.
- Thermal insulation on extract air ductwork: Not required.
- Vibration isolation mountings: Spring isolators, as section Y31.
- Acoustic treatment: Specialist to examine.

- Extract fans: Centrifugal belt driven, as section U82.
- Completion:

  - Identification of ductwork and equipment: As section Y32.
  - Testing and commissioning:
  - Ductwork pressure testing, as section U80;
  - Air distribution system commissioning, as section Y50; and
  - Performance testing, as section Y50.

EXECUTION

Project Co. shall ensure all works shall be done in a safe manner and comply with Health and Safety Regulations. This shall include clean and tidy working and working in confined spaces.

All supply and extract ventilation systems shall be clearly labelled. The label shall identify both the AHU and the area that it serves. The lettering shall be at least 50 mm high and be mounted in an easily visible place near the fan of the unit. Any sub-systems and the principal branch ducts shall be similarly labelled. The direction of air flow shall be clearly marked on all main and branch ducts.

630 INSTALLING DUCTWORK ON AIR HANDLING UNITS

- Air discharge: Connect ductwork to allow air to straighten as it leaves the air handling unit.

U41 FAN COIL UNITS

310 FAN COIL UNITS

Fan coil units shall be complete with dedicated controls enabling temperatures to be varied within each treated space. The units shall, where applicable, include heating. The controls shall comprise local room mounted temperature sensor/controller operating 2-port electrically operated valves in response to user inputs to raise or lower the room temperatures.

All Fan coil unit motors shall be fitted with built in Thermal overload protection.

- Performance: To BS 4856.
- Manufacturer: choice
  - Product reference: Project Co. to provide technical proposals.
- Project Co. shall examine all layout drawings, schematics and schedules, in order to ascertain duties and required temperatures.
- Fan speed: Low.
- Fan motors: EC type with a Specific Fan Power less than 0.8 watts per litre/second
- Noise levels: As fan coil schedule.
- Electrical supply type: As fan coil schedule.
- Casings: As manufacturer's standard for application.
- Mounting: As manufacturer's standard for application.
- Finish: As manufacturer's standard for application.
- Ductwork connections: Installer to provide proposals.
- Access: Provide access to filter, fan and motor, valves and controls.
- Drip tray:
  - Position: Under coil, and under control valve where fitted.
  - Material: Corrosion resistant.
  - Condensation: Insulate external faces to prevent.
- Controls: All ventilation controls must be capable of being fully interrogated by the building management system through the independent network protocol.
- Accessories: As Fan coil schedule.

EXECUTION

Project Co. shall ensure all works carried out shall be done is a safe manner and comply with Health and Safety Regulations. This shall include clean and tidy working and working in confined spaces.

610 FAN COIL UNIT DRAIN LINE

- Drain connections: Connect drain line flush with bottom of drip tray.
- Drain line: To discharge via a suitable dry type trap.

U60 LOCAL AND ROOM AIR CONDITIONING SYSTEMS

GENERAL

Generally ventilation and comfort cooling shall be from central systems. Where this is not possible because of the remoteness of the area from the main plant, the particular use of the space, or high cooling loads, local systems shall be used. Project Co. shall ensure that these systems are installed to the same high standard as the main system.

PRODUCTS

All elements of the work shall be in accordance with the requirements of current legislation, regulations and industry standards. The installation shall also comply with relevant British Standards. Project Co. shall provide working drawings for the installation and issue them for comment before work commences.

340 COMPUTER ROOM AIR CONDITIONING UNITS (CRAC)

The main core server room air-conditioning systems shall be feed from the main chilled water system. Computer rooms shall each be provided with independent system via dedicated secondary chilled water circuits having their own plate heat exchangers and circulating pumps.

CRACs shall be floor standing 'downflow' type and must be capable of being fully interrogated by the building management system through the independent network protocol.

To comply with these directives appropriate national & harmonised standards have been applied. These are listed on the Declaration of Conformity, supplied with each product.

Unit cabinets shall be manufactured from galvanised sheet steel coated with epoxy baked powder paint to provide a durable finish. Internal strength and rigidity shall be provided by a welded space frame constructed of channel profile folded steel. Cabinets shall be lined internally with fire resistant 20mm foam (UL94 V0) for thermal and acoustic insulation. Cabinets shall meet the Hospital acoustic and vibration requirements. The cabinet doors are full height, hinged and key lock secured. Door arrangement shall allow flexible door opening/removal for improved access. Doors shall have rubberised door seals reduce sound breakout and eradicate leakage.

The units shall have large surface area coil(s) to optimise airflow and heat transfer, manufactured from refrigeration quality copper tubes with mechanically bonded aluminium fins.

Fins shall be coated with a non-stick acrylic film to provide additional corrosion protection and efficient surface water removal for improved performance.

Coil headers shall be circuited to ensure low water pressure drops. The cooling coils shall be mounted over a full width stainless steel condensate tray. Chilled water flow shall be via a factory fitted 3 port modulating control valve.

All coils shall be Factory pressure tested to 20Bar.

Fans shall be backward curved impellers, direct drive centrifugal fan assemblies with integral rotor mounted motor which is statically and dynamically balanced for quiet operation. Designed for high corrosion resistance, the impellers are laser welded aluminium with galvanised rotor and die cast aluminium EC power module. An inbuilt EC fan control module shall allow the fan to modulate from 15-100%.

Filters shall be 97mm pleated disposable panel filters in a rigid frame. Conform to BS EN 779-G4.

Access and removal from unit front. An adjustable diaphragm pressure switch fitted across the filter assembly shall monitor pressure drop which shall initiate a filter dirty alarm.

The control panel shall have fan motor contactors and overloads, transformer, sub circuit protection, volt free contacts, mains and inter-connecting terminals. The panel shall be fitted within the cabinet and be hinged for easy access to other components within the unit. The electrical control panels shall be wired to the latest European standards and codes of practice.

To ensure complete unit isolation of the electrical panel during adjustment and maintenance a door interlocking isolator is provided as standard.

Units shall be fitted with the microprocessor controller which shall have a real time clock and a communication port plus networking and Bac Net BMS connections. A backlit LCD door mounted display keypad assembly shall be fitted to view the unit status and allow operator adjustment.

The condensate pump shall have a reservoir with a capacity of 5 l/m at a head of 10.8m.
Leak detection tape suitable for sensing water droplets shall be supplied loose for remote mounting on site.

- to provide technical proposals.
- Arrangement: Vertical.
- Casing: Steel frame with acoustically lined steel panels.
- Finish: Manufacturer's standard.
  - Colour: Manufacturer's standard.
- Controls: All controls must be capable of being fully interrogated by the building management system through the independent network protocol.

Each server room shall be provided with the following:

• Room sensible cooling capacity	32 kW
• Number of units (N+I)	3- No.
• Sensible cooling capacity per unit	16 kW
• Sensible Heat Ratio	1.0
• Chilled water temperatures at unit	Flow 6°C Return 12°C
• Chilled water flow rate per unit	0.635 litres/second

- Maximum coil/valve pressure drop 60 kPa
- Inlet air design conditions 22°C 50% RH
- Nominal air flow per unit 3.75 m³/s

EXECUTION

Project Co. shall ensure all works carried out shall be done is a safe manner and comply with Health and Safety Regulations. This shall include clean and tidy working and working in confined spaces.

U80 AIR DUCTWORK AND ANCILLARIES

During installation the ductwork shall be installed to a PDI (Protection, Delivery & Installation) as defined in the HVCA (2005) TR/19 – Guide to good practice: internal cleanliness of ventilation systems'.

A Specialist Cleaning Operation shall be performed on all ductwork systems installed serving Clinical Areas, in accordance with the guidelines of Section 9 – Verification of Cleanliness, HVCA TR/19.

The cleanliness of the ductwork installation shall be confirmed and documented by means of the post clean verification test procedure outlined in Section 9.5 of HVCA (2005 TR/19).

300 CLASSIFICATION

Ductwork shall be classified as described in Table 1 of DW/144, as follows:-

- Plantroom and main riser ductwork: Class B
- Distribution ductwork at each floor Class: A

The ductwork installer shall clearly indicate on the manufacturing and installation drawings the classification of the ductwork proposed.

All ductwork shall meet the leakage criteria given in the Building Regulations Section 6 which requires it to meet the requirements of HVCA DW/143.

10%, chosen at random, of Class B ductwork shall be selected by the Board for testing.

Ductwork branch connections shall be shoe type as fig 106 in DW144, spigot type branches shall not be acceptable.

Project Co. shall ensure that sufficient dampers are provided to regulate and balance the system. Dampers on grilles or diffusers shall be used only for balancing of external air distribution devices in a common branch. All dampers shall be sufficiently rigid to prevent vibration within the systems, when absorbing the additional available pressure of the system.

PRODUCTS

A specialist ductwork manufacturer/ installer shall be employed by to fabricate install and test a range of ductwork that shall be used for general ventilation, air conditioning or comfort cooling.

305 DAMPERS, FIRE AND SMOKE, METAL DUCTWORK

The ductwork system shall be provided with fire dampers in locations corresponding to the appropriate fire separation barriers. Actuation of the dampers shall be in accordance with SHTM81 Fire Code, and the Fire Consultants Strategy Report, subject to the separation performance of the barrier.

Where actuation of the damper is via the fire alarm system the damper shall be motorised to facilitate re-opening after testing of the fire alarm system. Dampers utilising fusible link operation only shall be provided with local mechanical indicator on the side of the fire damper. Dampers with motorised operation shall be monitored via a separate electronic remote monitoring system.

Fire dampers shall be fitted with the correct installation frame and supports.

Fire rated ductwork shall be utilised where the use of fire dampers is inappropriate.

The smoke damper control panel must be capable of being fully interrogated by the building management system through the independent network protocol.

Smoke control dampers shall be provided in the positions as indicated on the drawings and shall be suitable for mounting in the horizontal or vertical plane. They shall be certified by the manufacturer to have been tested to the temperature time curve of BS ISO 10294, for a period of 4 hours with a classification of ES 240 in the fully closed position with power off.

Smoke control dampers shall have factory fitted installation frames to HVCA 10.1.83 specification and shall allow for all additional framing, supports and bracing securing the damper to the structures, to the satisfaction of the Building Control Officer.

All smoke control dampers shall be supplied with a factory fitted actuator, complete with integral micro switches and controlled mechanical fail safe operation of not more than 20 seconds.

The totally enclosed precise movement with British Standard 5588: Part 9999: 1999 should be held in the open position by means of a thermally actuated device set to operate at approximately 74 °C. Automatic smoke and fire control dampers are fire rated dampers as they are held in the reset (Open) position by a thermally actuated device.

The totally enclosed precise movement opposed blade drive shall be positioned out of airstream for protection against damage, be hard wearing and free running.

The control mode/damper connection shall be by means of the drive interface mechanism, which shall be totally independent of the ductwork.

Automatic smoke release dampers with their appropriate control modes shall have spring fail-safe open operation.

Project Co. shall be responsible for allocating a unique reference number to each damper per system and produce a schedule for the purposes of carrying out the inspection and testing of all installed smoke/fire dampers. Upon completion of the tests, the certificates, with the schedule must be issued confirming that all dampers have been inspected and function correctly in accordance with the manufacturer's data sheets. The ductwork installer shall allow for subsequent demonstration of all fire/smoke dampers to a witnessing party. Access door requirements as DW144 Appendix M require unique numbers to be identified on the fire damper and also on installation / record drawings, damper control graphics and within a schedule to be included in the O& M instructions.

Project Co. shall be responsible for ensuring the mechanical inspection and testing of all smoke/fire dampers installed on the contract is carried out with the smoke damper control specialist testing and in attendance same time. Upon completion of the tests, the certificates must be issued for confirming that all the dampers have been inspected and that they function correctly in accordance with the manufacturer's data sheets.

The dampers shall comply to Class A and B of Eurovent Document 2/2 and Test Procedures for Classes A, B and C of HVCA Ductwork Specification DW144.

305A DAMPERS, FIRE AND SMOKE, METAL DUCTWORK

The slam shut curtain fire dampers shall have a stainless steel folding curtain having unbroken movable joints, stainless steel constant tension closure springs for positive closure and stainless steel peripheral gasketing.

The self resettable, latching removable release mechanism cassette, shall ensure the closure of the stainless steel curtain under full fire conditions. The housing shall be galvanised steel fully welded spigotted type casing suitable for square, rectangular, circular or flat oval connections.

The spigotted casing with continuously welded corners and spigot connections makes these dampers suitable for inclusion into air distribution systems to the test methods of
Eurovent Class A, B & C and HVCA Ductwork specification DW144.

- Standard: To BS EN 1366-2.
- Type: Multi-blade.
- Manufacturer: to submit proposals.
  - Product reference: to submit proposals.
- Material: Stainless steel.
- Accessories: External visual indication of fire damper blade position.
- Fusible links fusing temperature: 72°C.

310 DAMPERS, NON-RETURN

Non return dampers shall be installed as shown on the drawings. They shall automatically shut of individual sections of an air conditioning system.

The damper shall be selected for the type of system (constant or variable volume).

- Standard: To BS EN 1751.
- Manufacturer: to submit proposals.
  - Product reference: to submit proposals.
- Leakage through closed blades: Class 0.
- Casing leakage: Project Co. to submit proposals.
- Pressure: Project Co. to submit proposals.
- Material: Galvanized sheet steel frame and aluminium blades.

330 DAMPERS, SHUT OFF

Shut of dampers shall be suitable for air conditioning and ventilation systems requiring air control and low closed blade leakage characteristics. For standard low/medium pressure and velocity systems.

Air control and system balancing shut-off dampers shall comprising of stainless steel aerodynamic blades with synthetic trailing edge blade seals, synthetic blade end bearings and stainless steel top and side spring tempered flexible gasketing. Dampers to have a maximum closed blade leakage of 27 l/s at 1000 Pa when measured on a 1000mm wide x 1000mm high damper. Housed in a galvanised mild steel frame having integral peripheral flanges.

- Standard: To BS EN 1751.
- Manufacturer: to submit proposals.
  - Product reference: to submit proposals.
- Leakage through closed blades: to submit proposals.
- Casing leakage: to submit proposals.
- Pressure: to submit proposals.
- Setting: to submit proposals.
- Material: Galvanized sheet steel.
- Control method: Electric and electronic.

340 FLEXIBLE DUCTWORK

Flexible ductwork shall not be used in runs that are more than 1.0m. Fixed ductwork shall terminate not less than 450mm from terminal equipment. Actual lengths of flexible ductwork when fully extended shall not exceed 125% of the connection distance.

Where the flexible ductwork is to be insulated, this shall be factory applied of a type approved for the application and to the thermal conductivity equivalent to the adjacent thermal insulation, and shall be Class O fire rated.

- Standard: To HVCA DW/144.
- Manufacturer: to submit proposals.
  - Product reference: to submit proposals.
- Material: As specification U10.

370 PRESSURE STABILISERS

Pressure control flaps/pressure stabilisers are to be installed as shown on drawings. The flap/stabiliser shall accurately control the differential air pressure between adjacent rooms, and the blades close fully as soon as the pressure differential drops below the required level. This diverts the airflow to pass through an open door forcing back airborne contamination.

The damper shall come with a Standard Finish: RAL9010 powder coated white with antimicrobial protection as standard.

Bearings shall be stainless steel ball roller type sealed for life ball bearings. Pressure Control Range shall be 3 - 50 Pa with a setting accuracy of +/- 1 Pa. Where required the flap/pressure stabilisers shall come complete with fire/fire smoke damper.

The fire/smoke damper shall be standard smoke/fire damper integrity tested to BS EN 1366 for 245 minutes - ES classification (ES245).The fire/smoke damper shall be enclose in a case with the flap/stabiliser as one unit and the entire case shall be powder coated white with antimicrobial protection as standard. The fire damper must be compatible and be capable of being controlled by the fire damper control panel/system.

- Manufacturer: to submit proposals.
  - Product reference: to submit proposals.
- Material: Stainless steel flap and adjustable balance weight assembly.
- Wall mounting casings material: to submit proposals.
- Control pressure of balance weight: to submit proposals.

380 ACCESS DOORS

An access panel shall be provided adjacent to all items of in-line equipment that require either regular servicing or intermittent access.

Access doors shall not generally be less than 450 mm long by the full width of the duct on sizes up to 450 mm wide. For ductwork sizes up to 600 mm wide, access door shall not be less than 450 mm x 450mm clear opening. Ductwork sizes for 600 mm-900 mm shall have not less than 600 mm x 450 mm access doors. For ducts with longest dimensions below 300 mm Level 2 access doors DW/144 Table 25 shall apply. For ductwork with sides longer than 900mm access door sizes shall be agreed with . Where man access into ductwork is possible then the supports and fixing shall be suitable to support the weight of an occupant and tools. Access doors shall be installed adjacent to all coils and batteries for inspection and cleaning.

Access and inspection opening locations shall be in accordance with Part 7 of DW/144 and suitable to comply with the requirements of TR/19 with the exception of above and the following.

All doors shall be fitted with rust-resistant quick release fasteners and those in the riser shafts shall be supplied with an approved retaining device fixed to door and frame. Access doors shall be capable of withstanding the respective system test pressures referred to in Table 1 of DW/144.

All access doors are to be pre-insulated and shall be constructed and installed in such a manner that the internal face of the duct and door is maintained when fixed. On insulated services all access doors shall be fitted with raised stools which shall be equal to the depth of the insulation. For tender purposes assume insulation thickness of 38 mm. All insulation finishes shall be extended to the neck size of the access door with the access doorframe returns exposed on the surface of the insulation finish.

Ductwork test holes shall be required to be drilled in the locations recommended in SHTM 2025/03-01 (Commissioning) and identified by the commissioning engineer. Test holes shall be drilled and located in accordance with the requirements of BSRIA Application Guide 3/89 Section C3.2 at the positions confirmed by in situ marking or marked up ductwork drawings. Each test hole to be sealed with a top hat grommet. Locations shall not be limited to those described.

Access doors, panels and covers other than those regarded as standard practice (see DW/144) shall be marked on the manufacturers drawings issued for comment or noted below or in other sections of this specification, including type to be used.

Details of large access openings shall be agreed and shall be:-

Fitted in readily accessible locations and suitable for the purpose.

Provided to the sizes, requirements and positions recommended in DW/144 and this specification and on the drawings, utilising suitable proprietary products, which meet the relevant pressure classifications. Provided adjacent to duct mounted filters, cooling coils, fans, heating coils, humidifiers, and all dampers including hand fire and smoke dampers to facilitate easy cleaning and maintenance.

For air-conditioning (A.C) systems access doors provided for Level 3 access and for other ventilation systems Level 2 access is provided all as indicated on DW/144 Table 25.

Access doors shall be sealed, to ensure an airtight seal with a soft EDPM full-face gasket secured to the ductwork with an approved adhesive. Fire rated to match the standard of ductwork in which they are installed. Insulated in all thermally insulated ductwork to match the insulation value of the associated lagging and maintain the vapour barrier.

FABRICATION

Ductwork used for general ventilation system (including air-conditioning and comfort cooling) shall be manufactured from sheet steel and may be rectangular, circular or flat oval as indicated on the scheme design drawings. Ductwork constructed from an alternative material shall be agreed with and clearly indicated on the scheme drawings. Ductwork, shall generally be constructed from zinc coated Steel as described in DW/144.

The specialist ductwork manufacturer/installer shall be responsible for:-

Reviewing associated Architects and Structural Engineers drawings to confirm routes, availability of supports etc. Site measuring built structures to confirm suitability of routes, co-ordination (with the structure).

Provision of manufacturing/installation and builderswork drawings associated with the ductwork system.

Provision of support details and proposed locations. This shall be via manufacturing drawings and mark-ups on Architectural/Structural engineers' scheme drawings.
Co-ordination and installation of all ductwork components not directly supplied by the ductwork manufacturer/ installer.

Manufacture and supply of all ductwork, and associated components. Installation, air leakage testing, and component operation testing of the ductwork systems and their associated equipment. Preparation of as-fitted ductwork drawings - issued as electronic copy and hard copy at a scale of 1:50 or 1:25.

All the forgoing responsibilities shall be co-ordinated and integrated within the agreed programme of installation.

520 FIRE RATED AND SMOKE EXTRACT DUCTWORK AND FITTINGS

Where indicated on the scheme drawings or where passing through fire rated rooms/enclosures, ductwork shall be of fire rated construction equal to the room/enclosure through which it passes, in accordance with the Fire Consultant's Strategy Report and NHS Fire Code SHTM 81. Project Co. shall review the fire strategy and architects drawings.

The location of the fire enclosing structures and their value (in hours) are indicated on the Architects drawings.

The ductwork shall be constructed as a complete system to provide the rated protection for stability, integrity and insulation when tested in accordance with SHTM 81 and BS. Any components within the system shall maintain the overall integrity in accordance with the test procedures.

Where ductwork services penetrate fire rated walls and cavity barriers, the penetrations shall be sealed after installation by using a proprietary fire sleeve/sealant as manufactured by specialists.

The ductwork systems shall be fire stopped where appropriate. Where plastic ductwork is specified the ductwork manufacturer/installer shall supply and fit to ductwork intumescent sleeves for to finish too.

The ductwork shall be constructed as a complete system to provide the rated protection for stability, integrity and insulation when tested in accordance with BS476 Part 24. Any components within the system shall maintain the overall integrity in accordance with the test procedures.

All fire rated ductwork shall be constructed and installed by a specialist supplier who shall certificate the complete system to the approval of the Local Authority Building Control Officer.

The standard of fire stopping shall give greater or equal fire resistance as the construction through which the service penetrates. Where sheet steel or rolled steel section sealing flanges are required the ductwork manufacturer/installater shall provide them.
Cleanliness and leak tests shall be as main ductwork section.

- Standard: To HVCA DW/144.
- Fire resistance to BS 476-24: As this specification.
  - Stability: To meet room requirements.
  - Integrity: To meet room requirements.
  - Insulation: To meet room requirements.
- Accessories:
  - Materials: Compatible with ductwork.
  - Finish: Match ductwork.

530 PLASTICS DUCTWORK AND FITTINGS, CIRCULAR (No plastic ductwork shall be used without prior written agreement of)

- Standard: To HVCA DW/154.
- Environmental conditions for plastics ductwork: As drawings.
- Material: As drawings.
- Regulating dampers: As drawings.
- Flexible joint connections: Fit on fan inlets and outlets and at building expansion joints.
- Hangers and supports
  - Strength requirements: To BS EN 12236.
- Access openings: As required.

550 SHEET METAL DUCTWORK AND FITTINGS, CIRCULAR

Standard components shall be used wherever practical. Circular ductwork supports shall be as Figures 65 (drop rod studding only) or 66(DW/144).

- Standards: To HVCA DW/144, BS EN 1506 and BS EN 12237.
- Air leakage testing: As classification requirement.
- Special installations: Not applicable.
- Material: Suitable for system and as drawings.
- Construction: Spirally wound.
- Regulating dampers:
  - Balancing type: Suitable for system and as drawings.
  - Operation: Suitable for system.
  - Material: Suitable for system.
- Flexible joint connections: Fit on fan inlets and outlets and at building expansion joints.
- Hangers and supports
  - Strength requirements: To BS EN 12236.
- Access openings:
  - Function:
  - Inspection;
  - Cleaning; and
  - Maintenance.
  - Sizes: As DW 144 and Part U10.

560 SHEET METAL DUCTWORK AND FITTINGS, RECTANGULAR

Any duct with an aspect ratio greater than 4:1 shall be supplied with a central splitter. For all slide-on flange systems ventilation with bolted corners, joints on all systems to be further secured with intermediary fastenings to the Manufacturer's recommendations. Only full girth stiffeners shall be used. Dimpling, self-tapping screws and piercing screws shall not be used as fasteners on ductwork. Turning vanes shall be double skinned as (DW/144) and attached to ductwork using guide rails as indicated in DW/144. Access doors are required in accordance with HVCA guide TR/19 Tables 2 and 3.

The ductwork manufacturer/installer may use radius bends as Figure 29 (DW/144) as an alternative, enabling turning vanes to be omitted.

- Standards: To HVCA DW/144 and BS EN 1505.
- Air leakage testing: As classification requirement.
- Special installations: Not applicable.
- Material: Suitable for system and as drawing.
- Regulating dampers:
  - Balancing type: Suitable for system and as drawing.
  - Operation: Suitable for system.
  - Material: Suitable for system.
- Flexible joint connections: Fit on fan inlets and outlets and at building expansion joints.
- Hangers and supports
  - Strength requirements: To BS EN 12236.
- Access openings:
  - Function:
  - Inspection;
  - Cleaning; and
  - Maintenance.
  - Sizes: As DW 144 and Part U10.

EXECUTION

Project Co. shall ensure all works carried out shall be done is a safe manner and comply with Health and Safety Regulations. This shall include clean and tidy working and working in confined spaces.

610 GENERAL

- Cut edges on ductwork, flanges and supports: Smooth and burr free.

630 INSTALLATION OF PLASTICS DUCTWORK

- Standard: To HVCA DW/154.
  - Other requirements: Generally no plastic ductwork shall be used.
- Installing flexible joint connections: Minimize pressure drop.

640 INSTALLATION OF SHEET METAL DUCTWORK

- Standard: To HVCA DW/144.
  - Other requirements: Hangers and supports shall be generally as Table 15 of DW/144 or with manufacturer's proprietary devices with the following qualifications.
- Installing flexible joint connections: Minimize pressure drop.

650 SUPPORT OF AIR TERMINALS UNITS IN CEILING GRIDS

- Standard: To HVCA DW/144.
- Special supports: Supply and extract grille/ diffuser supports shall be as manufacturers detail.
- Position: is responsible for the co-ordination of the reflected ceiling
- layout.

670 DUCTWORK SUPPORT FOR VAPOUR SEAL CONTINUITY

- Method of support:

The horizontal bearers shall be steel profiled section such as Uni-strut or equal and approved proprietary support system. The horizontal bearers shall have a galvanised finish, and plastic end-caps. A medium density Class O rubber or EDPM gasket shall be provided between the ductwork and the support bearer horizontal surface. The gasket shall not fully deform under load. The ductwork shall calculate the support system selected. Horizontal supports shall not be used as secondary supports for additional services without prior approval. Calculations shall include the additional loads imposed by the agreed additional services. Multi-tier ductwork runs shall all be supported on individual horizontal bearers with single length common support rods sized for the combined load of all ducts being supported. Multiple section drop rods shall not be accepted. Insulated ducts with vapour sealing shall be provided with a timber or composite material isolating member between ductwork and the support bearer, either horizontally (rectangular ductwork) or circumferential (circular/flat oval ductwork).

The isolating member shall be the full depth of the insulation and shall have the insulation finish/vapour seal and where applicable encasement extended without a break at least 1 duct width or diameter either side of the support channel. The isolation rubber gasket shall also be included. The ductwork Project Co. shall include an allowance for insulation on all faces of ductwork when setting out in horizontal and vertical planes. Supports or bearers, that interrupt or penetrate the insulation or vapour seal, shall not be accepted.

The ductwork manufacturer/installer shall provide a standard sheet of support details cross referenced with the manufacturing and installation drawings. Where cantilever brackets or other special forms of support are indicated, they shall be structurally strong enough to take the load and to transfer the imposed load to the building structure. The Board may require design and supporting calculations for comment prior to manufacture.

690 DRAINAGE OF DUCTWORK

- Ductwork: Install to drain entrained moisture
- Joints: Lap to minimize moisture leakage.

700 TEST HOLES

- Location: In accordance with CIBSE Commissioning Code Series A and HVCA DW/144.

710 CONTROLS AND SENSING EQUIPMENT

- Install sensors and test points to suit specialist control and sensing equipment.

720 WEATHERPROOFING

- All duct work penetrations to the external shall be weathered by

740 INSTALLING CONTROL EQUIPMENT

- General: Fit sensors, damper motors and other control equipment.

760 ACCESS TO DAMPERS FOR RESETTING AND MAINTENANCE

- Location: Provide access to damper mechanisms on fire dampers; smoke dampers; combined smoke and fire dampers; and volume control dampers through access doors, false ceilings etc. Where more than one fire damper is installed in a frame provide access to all fire dampers.
- Fire links: Provide access so that they can be replaced.

790 DUCTWORK CLEANLINESS & VERIFICATION

Refer to section U80 above.

915 CLEANING OF KITCHEN EXTRACT SYSTEMS

- Cleaning: In accordance with HVCA TR/19.
- Method of test: Deposit thickness test.
- Method of cleaning: As section 7 TR/19.
- Post clean verification of cleanliness report: Submit.

940 AIR LEAKAGE TESTING OF MEDIUM PRESSURE DUCTWORK

- Standard: To HVCA DW/144.
- Procedure: Carry out tests. Submit report.
- Extent: Random testing of 10% maximum of the ductwork system.
- Test pressure: To HVCA DW/144.
- Documentation: Submit calculations used to arrive at the allowable loss for the section to be tested.

950 AIR LEAKAGE TESTING OF PLANT ITEMS

- Standard: To HVCA DW/144.
- Procedure: Include in-line plant with certificate of conformity for pressure class and air leakage classification for system under test.

960 FIRE DAMPER SPARES

- Fusible links: Supply spares.
  - Quantity: 4 no full set of spares.

U81 AIR HANDLING UNITS

PRODUCTS

Packaged supply and extract air handling plants shall be provided as defined in the schedules of equipment and as indicated on the drawings, or as defined further in this specification.

The air handling unit and fan supplier shall select the internal components of the plants, such that the overall system resistance does not result in system fan power being excessive.

Project Co. shall obtain from his proposed supplier calculations to demonstrate that the Building Regulation requirements for Specific Fan Power, etc are being met along with his technical submission.

All items of the AHU plant and system controls must be capable of being fully interrogated by the building management system through the independent network protocol.

310 AIR HANDLING UNITS

The supply and extract air handling plant shall in all respects comply and align with the requirements and recommendation detailed within the Health Technical Memoranda, in particular SHTM03-01 and 08-01, except where specifically noted within this specification.

The AHU shall be arranged so that the majority of items are under positive pressure. Any item of plant requiring a drain shall be on the positive pressure side of the fan.

AHU Plants shall be of a rigid, air tight, assembly and constructed in unitary form or consist of standard modular components, assembled to ensure even airflow throughout plant with no by-passing of active components. Sealing strips shall be provided between all component parts. Factory joints shall be fully tightened and all necessary sealing strips, nuts, bolts and washers etc. being provided for site made joints. The units shall be suitable for operating against closed dampers, i.e.no flow conditions during normal and fire operation. Panels penetrated by service pipes, electrical cables etc. shall be sealed together with all joints having an air leakage integrity at design pressure which is not less than the integrity of the associated ductwork systems.

The units shall incorporate gradual change section pieces between sections to minimise pressure drops, with spacing of components to manufacturer's recommendations to ensure satisfactory operation at each stage and allow access for inspection, cleaning and maintenance. The inside surfaces shall have smooth and easy clean finishes free from structural projection. The location of fan motor, fan belts, filters etc. shall be as detailed in the schedules and on the drawings.

All modular constructed plants shall be provided with purpose made base frames. Bases shall be of sufficient height to accommodate drainage traps from dehumidifiers, humidifiers etc. All plants shall be provided with sufficient access panels/doors and viewing windows to allow maintenance and repairs to be carried out. Coils used in air-handling units shall be rated in accordance with EN 1216. On larger plants, split/multiple coils shall be used.

Construction shall be such as to withstand maximum fan static pressure without deformation and with panel deflection of not more than 1/120 of maximum panel dimension under operating conditions.

Energy recovery shall be via a plate heat exchanger or thermal wheel (fitted with a purge sector), depending on the type of unit. Cleaning access shall be required to both sides of any energy-recovery device.

Where units incorporate recuperators or cooling coils, the internal surfaces of the units liable to be affected by any free water produced shall be protected by anti-corrosion paint (white). Such units shall have adequate drain trays to collect water; the drain trays shall be extended, or other means of collection shall be provided to ensure the removal of any water deposited or condensed in adjacent sections.

Trays collecting cooled water shall be insulated to prevent condensation on the outer surface. All the surfaces/features shall be suitable to withstand regular cleaning with a water solution containing 5ppm chlorine, such as 316 stainless steel. Internal sloping surfaces for humidifier and cooling coil sections to fall to drain. All drains shall be provided with glass U-traps suitable to withstand twice the negative/positive pressure produced by the fan and have a screwed access for cleaning and filling as indicated in TM13 (Minimising the risk of Legionnaire's disease) and as further defined in Department of Health Guidance Notes. Certified type test performance certificates shall be issued on completion of plant testing for fans, coils, filters and electric motors etc. Fire rating type test certificates shall be provided for filters. Individual pressure testing certificates shall be provided for coils. Specific fan performance curves shall be provided and these are to relate to the unit ESP with clean filters.

All wiring from fans is to be taken through the unit casing and a 2 metre tail left for connecting to inverters supplied by the controls specialist

Viewing ports and internal illumination shall be fitted to facilitate routine inspection of the AHU. Viewing ports should be at a convenient height so that temporary ladders are not required. Internal illumination should be provided by fittings to at least IP55 rating. Fittings shall be positioned so that they provide both illumination for inspection and task lighting. All of the lights in a unit shall be operated by a single switch.

320 AIR CONTROL DAMPERS

Motorised low leakage shut off dampers shall be located immediately behind the intake and discharge of each supply and extract system respectively. They shall be of the opposed blade type, opening through a full 90° and must close automatically in the event of power failure or plant shutdown to prevent any reversal of the system airflow.
A manually operated isolating damper should be installed between the main AHU and its distribution system to enable the unit to be isolated when cleaning is in progress.

- Function: Shut off.
  - Damper position: Dampers are to be rigid, with square connections fitted with end and edge seals of a flexible material and with minimal play in linkages. The leakage on shut-off should be less than 2%.
- Damper control: Motorized.
- Type: Multi-blade damper, opposed blade.
- Material: Manufacturer's standard.
- Ancillaries Locking device and Position indicator.

330 FILTERS

Filters shall be securely housed and sealed in well-fitting frames that minimise air by pass.

Mounting frames shall be designed so that the air flow pushes the filter into its housing to help minimise air bypass. Mounting frames shall be capable of being withdrawn so that the filter can be changed without having to reach into the unit.

Neither the filter media, nor any material used in the construction of the filters, shall be capable of sustaining combustion

All filters sections shall be provided with direct reading dial type gauges marked with clean and dirty sectors to visually show filter status.

A complete spare set of filters shall be provided at handover. Filter grades to be as schedule.

Refer to section U83.

340 HEAT RECOVERY

Heat recovery shall be provided to air handling units and be of the type as indicated on the schedules.
Refer to section U85.

350 HUMIDIFIERS

Space for future installation of packaged steam humidifiers shall be provided to air handling units as indicated on the schedules.

Space shall be included within Operating Theatre air handling units for the provision of humidification in the future.

Refer to section U86.

360 PREHEATERS

Duties as schedule.

Frost coils shall be plain tube without fins, where practical. Where this is not practical coils with fins at 6mm spacing shall be used.

Refer to section U84.

370 COOLING COILS

Duties as schedule.

Refer to section U84.

380 REHEATER

Duties as schedule.

Refer to Section U84.

390 FANS

Fans shall be selected to limit the total system (supply and extract fans) specific fan power, as described in the 'Non-Domestic Heating, Cooling and Ventilation Compliance Guide – Section 10. External system resistances for air handling units and fans are given in the schedule.

Fans shall be centrifugal fans with backward curved aerofoil blades, and give an efficiency of not less than 78%.

Fans shall be positioned to 'blow through' the central plant so that the cooling coil and humidifier drains shall be under positive pressure.

Where a centrifugal fan is located with an open intake, the clear distance between the suction opening and the nearest wall should be not less than half the diameter of the inlet. If two fans with free inlets are positioned within the same chamber, their adjacent suction openings should be at least 1 diameter apart.

Fan/s and drive/s shall be provided with mounting frames and isolation mountings.

Motors shall be located externally. On externally driven fans, drive connection or belts shall be provided with airtight seals to prevent leakage. Externally driven fans shall have suitable anti-vibration mountings and frame with flexible connections to the fan sections of the unit. Fan-drive trains, whether supply or extract, should be easily visible without the need to remove access covers.

Fan drives shall be protected by a mesh guard.

All fans shall be controlled by inverter speed control drives supplied by the controls specialist.

Fans shall be capable of being direct start with fixed speed and manual operation in the event of a computer control system failure or software fault.

Particularly attention shall be given to critical care systems serving operating suites, high dependency care units of any type, isolation facilities, laboratories and pharmaceutical production suites in this regard.

- Performance: In accordance with BS 6583.
- Type of fan: Centrifugal.
- Motor mounting: The fan motor shall be external to the air stream.
- Blow through units: Arrange section to allow uniform velocity profile downstream.

Refer to Section U82.

405 ATTENUATOR

Where attenuators are located within the air handling unit they shall be the same cross sectional area as the AHU and have diffusion plenums as necessary.

Cleaning access should be provided at both ends of any attenuator unit.

Attenuators shall meet SHTM03-01 and this specification.

The splitters shall be fitted with 0.8mm mild steel galvanised bull nosed entries and exits to reduce pressure drop.

Normally the attenuators shall be installed with the splitters in the vertical plane. However in some circumstances, i.e. close to a vertical bend it may be necessary to install with splitters horizontally. In those circumstances the splitters shall be suitably stiffened to prevent flexing and restriction of the airway.

Refer to section U87.

FABRICATION

Project Co. shall submit details of all mechanical equipment for comment and place orders in a timely fashion to ensure delivery as per programme

Project Co. shall protect the AHU's from damage or interference during the works.

The AHU's shall be blanked off when delivered to site to prevent dust entering the AHU.

Project Co. shall include for the services of the manufacturer's skilled services engineers to start up, test and check all the AHU's and controls. This shall include all tests to prove that all the AHU equipment is working with and responding to the clients BMS network and head end. The units when commissioned shall be "Set Up" to give maximum efficiency. The AHU's shall be witnessed by the Board before the plant shall be accepted from . Project Co. shall allow for instruction of the clients representative on the working of the equipment.

510 AIR HANDLING UNIT CASING CONSTRUCTION

Supply air handling plants shall be of a packaged construction with a double skin casing, complete with thermal/acoustic insulation material between the two skins. Units shall house filters, coils, fans and motorised inlet dampers, etc. Heat recovery devices shall also be incorporated as detailed in the AHU schedule.

Vibration isolation shall be provided in the form of spring anti-vibration mountings located under fan and motor bases with flexible connections from the fan discharge and the adjoining ductwork.

- Standard: To BS EN 1886.
- Details: is to submit shop drawings and details of dimensions and weight for review.
- Thermal performance of casing, to form part of the technical submission.
- Acoustic insulation of casing: To form part of the technical submission.
- Fire protection: To form part of the technical submission.
- Material: To form part of the technical submission.
  - Finish: To form part of the technical submission.
- Air handling unit feet: Base to suit AHU and depth of drain and pipe fall.
- is to allow space to integrate the BMS controls into each air handling unit, to serve that respective AHU, and liase with the BMS Specialist to integrate this.

520 AIR HANDLING UNIT ACCESS

- General: Provide access openings and covers complete, including opening devices.
- Seal: To prevent excessive air leakage.
- Seal durability: For normal maintenance operations over at least 10 years.
- Access type: Access doors/hatches as appropriate and where indicated on the drawings or called for in SHTMs, shall be provided complete with handles, locks, keys and latches to the same standards of construction and finish of unit.

Where the unit is large enough for a maintenance engineer to enter the unit, facilities for local maintenance isolation of equipment and opening the doors from the inside shall be provided.

The doors should be large enough e.g. 500mm minimum to allow easy access. Items requiring infrequent access such as attenuators may be via bolted on, lift off panels All doors/panels shall be provided with seals to prevent air leakage.

Access shall be provided as a minimum to fan chamber, dampers, filters, humidifiers and both sides of heating and cooling coils.

Internal lights and double glazed viewing windows shall be provided into fan chambers,
either sides of coils, humidifier sections and where indicated on the drawings. Fittings within the unit shall be to IP55 standard and be operated from a single switch. Additionally, the cladding shall be capable of being easily removed as is necessary to obtain access for necessary inspection and maintenance and also for removal of large items of equipment.

All necessary items shall be assembled by means of nuts, bolts, anti-vibration lock washers equal and approved quick release fastenings. Access doors on isolation suite extract shall have biohazard label affixed.

EXECUTION

610 COMPONENT ASSEMBLY

- Sealing: Provide gaskets between air handling unit sections to prevent air leakage from casing.
- Site drilling of air handling unit: Not permitted.

620A ACCESS

- Access space: Position air handling units to allow space for maintenance and access.

Access for servicing shall be as manufacture recommendations and drawings.

As a minimum Project Co. shall allow the width of the AHU for withdrawing the coils.

630 COIL INSTALLATION GENERALLY

- Venting and draining: Set out pipeline to and from the coils to allow venting and draining of the coils and piping.
- Support: Do not support pipeline and valves on coil connections.
- Access: Allow space to inspect and maintain the coils on both sides.

640 HOT WATER COILS INSTALLATION

- Expansion: Connect pipeline to allow free expansion of headers and tubes.

650A DRAIN LINES INSTALLATION

- All items of plant that could produce moisture must be provided with a drainage system.

The system shall comprise a drip tray, glass trap, air break and associated drainage pipework. All parts of the drainage system must comply with SHTM 03-01.

The drip-tray should be constructed of stainless steel, and be so arranged that it shall completely drain. To prevent 'pooling', it is essential that the drain connection should not have an up-stand; and that a slope of 1 in 20 in all directions should be incorporated to the drain outlet position. The tray must be completely accessible or, for smaller units, easily removable for inspection and cleaning.

Where traps are fitted to plant located outside or in unheated plant rooms trace heating shall be required. The trace heating must not raise the temperature of the water in the trap above 5°C.

660 SERVICES CONNECTIONS

- Entry points: Seal around electrical cable and pipeline entry points to prevent air leakage.
- Flexible cables: Provide between fan motor and local isolator.

670 ISOLATION OF AIR HANDLING UNITS

- Electrical connections: Provide means of isolating air handling units electrically.
- Pipe connections: Provide means of isolating pipelines to air handling units.
- Steam: Provide means of isolating steam to humidifier when access door is opened.

680 SUPPORT FOR AIR HANDLING UNITS

- Method: Purpose made raised frame, with sufficient clearance for drains and traps.

COMPLETION

During the flushing of the pipework system the AHU coil must be by passed or disconnected.

Under no circumstances shall flush though the coils

The units shall be supplied initially with one complete set of spare filters and a further set is to be offered for handover to the client at the end of the contract. This set should be carefully packed and labelled for each plant and filter type.

Alongside each filter gauge a permanent label is required with the following information:-

- Type (pre, bag, final etc.)
- Grade
- Size
- Clean PD (at full speed)
- Dirty PD (at full speed)

910 PRE-COMMISSIONING OF COILS

- Preparation:
  - Remove protective covering.
  - Check frost protection and drain if heat is not available in freezing conditions.
  - Straighten fins.
- Cleaning and chemical treatment: Use chemicals compatible with the materials in the coils.

920 AIR LEAKAGE TESTING

- Testing: In accordance with HEVAC Guide to air handling unit leakage testing.

930 TESTING

- Test location: On site before incorporation in works. (Selected factory testing/inspection may be carried out)
- Test results: Submit.

U82 FANS

PRODUCTS

All fans shall be type tested to BS.848 and a type test certificate shall be provided for each type of fan supplied. All fan duties shall be at an air density of 1.2 kg/m³ at 1.01325 bar and 15°C. Fan outlet velocities shall not exceed 10.00 m/s. Each fan shall be provided with dedicated fan performance curves, with the duty selection, absorbed power requirements, motor selection and sound power levels clearly indicated.

All fans shall be selected for low noise.

All fans shall be low energy type.

All fan's and system controls must be capable of being fully interrogated by the building
management system through the independent network protocol.

All fans shall be inverter driven.

310 AXIAL FLOW FANS

Axial flow fans shall be of the long case pattern with a heavy gauge mild steel casing
galvanised after fabrication, flanged and drilled at each end.

The impeller shall be of multi-blade aerofoil section constructed from die cast aluminium or heavy-duty steel. The hub design shall allow for manual adjustment of the blade pitch angle. Multi-stage axial fans shall be arranged with contra-rotating stages.

The impellers shall be directly driven through a totally enclosed motor with ball or roller bearing to suit the application. The fan motor shall be sized so that a blade pitch angle adjustment of the impeller of up to 2° shall be possible without a change of motor. During assembly of each fan the fan impeller shall be statically balanced to a level of 4.5 mm/s RMS at the fan feet. All bearing lubrication shall be extended to the outside of the casing. Axial fans shall be complete with anti-vibration mounts, flexible connections and matching flanges for duct connection and bellmouths and guards where fans are in free air. Motor terminal boxes shall be external to the casing and provide protection to IP55 as defined in BSEN.60529.

- Performance: To BS 848-1.
- to provide technical proposals for review.
- Mechanical safety: To BS 848-5.
- Electrical safety: To BS EN 60335-2-80.
- Dimensions: To BS 848-4.
- Operating conditions:
  - Environment: Existing hospital and residential housing
  - Air density: 1.20 kg/m3.
- Operation: As schedule and drawings.

- Inspection doors: Fit airtight inspection doors giving access to drive motors and other components requiring regular servicing and maintenance.
- Motor and drive: Match fan.
- Material:
  - Casing: Manufacturer’s standard. to submit proposals.
  - Impeller: Manufacturer's standard.
- Anti-vibration mountings: Manufacturer's standard. to submit proposals.
- Flexible duct connections: Manufacturer's standard. to submit proposals.
- Accessories: As schedule and drawings.

320 CENTRIFUGAL FANS

Fan units shall be installed as detailed on drawings and fan schedules. External fans shall be weatherproofed and suitable for conditions.

The assembly is dynamically balanced to DIN ISO 1940. Motors shall be constructed from aluminium and be suitable for speed control.

Fans shall be suitable for horizontal through to vertical shaft operation. Supplied IP55, with removable drain plugs.

Sealed for life bearings lubricated with wide temperature range grease. Motors shall be fitted with thermostat overheat protection as standard. Three phase motors shall be suitable for inverter speed control down to 20% of full speed where specified.

Fans shall be fully cased, complete with an externally mounted pre-wired electrical terminal box. Casings shall be from sheet steel with integral pre-drilled inlet flanges.

Casings shall have a galvanised finish to provide a high corrosion resistance

- Performance: To BS 848-1.
- to provide technical proposals for review.
- Mechanical safety: To BS 848-5.
- Electrical safety: To BS EN 60335-2-80.
- Dimensions: To BS 848-4.
- Operating conditions:
  - Environment: Existing hospital and residential housing.
  - Air density: 1.20 kg/m3.
- Operation: As Fan schedule.
- Motor and drive: Match fan.
- Casing: Manufacturer's standard. to submit proposals.
- Inspection doors: Fit airtight doors in scroll and cover.
- Mounting: As Fan schedule and drawings.
- Material Galvanized sheet steel.
- Anti-vibration mountings: Manufacturer's standard. to submit proposals.
- Flexible duct connections: Manufacturer's standard. to submit proposals.
- Accessories: As Fan schedule.

350 ROOF MOUNTED FANS

The roof mounted extract/supply fans shall be located in the positions indicated on the drawings and in accordance with the relevant fan schedule. They shall have a low profile cowl manufactured in flame retardant GRP.

The roof fan shall suit the roof profile.

The fan shall be supplied complete with backdraught shutters, bird guard, purlin box curb, hand guard, specific details of the curb and purlin shall be confirmed by

Project Co. shall make due allowance for supporting the fan via the provision of purpose made trimmers between purlins. The trimmers shall be sized to adequately support the weight of the fans.

The fan shall be supplied with all the control interfaces to integrate with the clients BMS system.

- Performance: To BS 848-1.
  - Inlet and outlet arrangement: to provide technical proposals for review.
- to provide technical proposals for review.
- Mechanical safety: To BS 848-5.
- Electrical safety: To BS EN 60335-2-80.
- Dimensions: To BS 848-4.
- Operating conditions:
  - Environment: Normal
  - Air density: 1.20 kg/m3.
- Operation: As Fan schedule and drawings.
- Motor and drive: Match fan.
- Anti-vibration mountings: Manufacturer's standard. to submit proposals.
- Flexible duct connections: Required.
- Flexible electrical connection: Fans electrical power shall be rated for outdoor use.
- Accessories: As Fan schedule.

355 SMOKE EXTRACT FANS.

Fans shall be the bifurcated type as indicated or required, the motor shall be outside the airstream. Motors may be placed between the two halves of the casing using ambient air for motor cooling. Where hot gases, vapours or corrosive fumes are being handled, the motor bearings shall be suitable for operation at the temperatures resulting for the processes involved.

Fans shall be specially constructed for the temperature and the running duration specified during Fire/smoke condition.

- Standard: To BS EN 12101-3.
- to provide technical proposals for review.
- Electrical safety: To BS EN 60335-2-80.

- Accessories:
  - Flexible connections: Required.
  - Vibration isolators: Manufacturer's standard. to submit proposals.
- Control: As schedule.
- Starting device: As schedule.

360 TOILET EXTRACT FANS

Dirty extract systems shall be provided with dedicated extract fans. The fans shall be arranged for duplicate operation in a run and stand-by configuration.

The fans shall be of the centrifugal type with forward curved blades. The impellers shall be belt driven.

Each fan shall have its own dedicated motor and drive assembly mounted on a common base frame with spring anti-vibration mounts between the frame and the unit case/framework.

The fans shall be arranged for auto changeover achieved via the BMS. On failure of the duty fan the stand-by shall start and run. The changeover shall also include the automatic activation of backdraught dampers. The fan enclosure shall be configured to allow continuous operation of the stand-by fan while the failed unit is removed for repair or replacement. The fan and motor shall be removed as a common assembly.

The fans shall be housed in a common heavy gauge aluminium casing arranged for ducted inlet and outlets.

The units shall be provided with airflow and failure monitors suitable for interfacing with the BMS. Auto changeover shall be undertaken by the BMS.

- Performance: To BS 848-1.
  - Inlet and outlet arrangement: As drawings.
- Manufacturer: to provide technical proposals.
  - Product reference: to provide technical proposals.
- to provide technical proposals for review.
- Electrical safety: To BS EN 60335-2-80.
- Operation: As schedule
- Electrical supply type: As schedule.
- Accessories:
  - Access panel: Removable panel
  - Controls: Speed controller to match fan, refer to BMS for further details.
  - Silencer.
  - Backdraught damper.
  - Anti-vibration mount.
  - Guards.

370 CONSTRUCTION AND HANDLING

- Casings: Rigid, so there is no drumming under operating conditions.
- Lifting: Provide lifting eyebolts facilities on fans or sections heavier than 20 kg.

EXECUTION

610 INSTALLATION

- Fixing: Use fixing points provided. Do not strain the fan structure when bolts are tightened.
- Orientation: Mount impeller shaft horizontally.
- Alignment: Install fan to allow optimum air flow path.

U83 AIR FILTRATION

PRODUCTS

Filters shall be provided in a separate plant section of the air handling unit or, if specified, as part of a common section. Filter banks shall be provided with mounting frames to suit standard commercially available filter cells, arranged for side or front withdrawal as per schedules.

Air filters shall be constructed not to be capable of supporting combustion.

Gauges shall be provided across each filter. Tees and branch tubing should be fitted to allow the controls specialist to fit a separate dirty filter warning pressure switch. All filters shall include a filter dirty alarm to the BMS.

Alongside each filter gauge a permanent label is required with the following information:-

- Type (pre, bag, final etc.)
- Grade
- Size
- Clean PD (at full speed)
- Dirty PD (at full speed)

One complete spare set of filter media for each plant shall be provided at handover, being carefully packed for storage and labelled for respective plant and filter types.

Project Co. shall supply and install services and equipment to perform as per specification. Project Co. shall submit details of all mechanical equipment for comment and place orders in a timely fashion to ensure delivery as per programme.

Where a particular manufacture is specified, Project Co. shall include for that manufacturer.

Where considered appropriate, provide for equivalent standard alternatives to be offered for consideration.

This must be done in a timely manner and Project Co. shall provide all details including but not limited to.

- Detailed description
- Cost comparison
- Technical comparison
- References to standards

310 PRIMARY FILTERS

Filter media shall be manufactured from 100% recycled materials. Filter media shall be a cotton and synthetic blend, lofted to a uniform depth, and formed into a uniform radial pleats.

A welded wire grid, treated for corrosion resistance, shall be bonded to the downstream side of the media to maintain the radial pleat and prevent media oscillation.

An enclosing frame, of biodegradable board shall provide a rigid and durable enclosure.

The frame shall be bonded to the media to prevent air bypass.

The manufacturer shall provide evidence of facility certification to ISO standard.

- Performance: To BS EN 779.
- Filter type: to submit proposals.
- Manufacturer: to submit proposals.
  - Product reference: to submit proposals.
- Duty:
  - Air flow rate: to submit proposals.
  - Air velocity: to submit proposals.
  - Initial filter pressure drop: to submit proposals.
  - Final filter pressure drop: 150 Pa.
  - Filter class: As schedules.
  - Filter height, width and limiting depth: As schedule and drawings.
  - Conditions: Sewerage works nearby.
- Flammability: Non-flammable for duration of recommended working life.
- Casing: Manufacturer's standard.
- Access: As specification.
- Filter mounting frames: Purpose made, rigid, with building-in ties where filter is mounted in walls or partitions.

320 SECONDARY FILTERS

Bag or extended surface type filters shall be provided to the required grade or better as specified, in the Equipment Schedules with maximum air velocity at face not exceeding 2.5 m/s. Filter media shall be manufactured from 100% recycled media.

Filters shall be fully self-supporting without external ties or stiffening frames. Filters shall inflate fully, shall not sag or flutter, nor have effective medium area reduced by obstruction due to contact with other filter faces or housing surfaces when operating between 60% and 110% of design air volume for constant volume systems or between the specified minimum and maximum air volume rates for multi-speed systems. Bag shall be short or normal length as noted in the Schedule of design criteria.

- Performance: To BS EN 779.
- Filter type: Bag.

- Manufacturer: to submit proposals.
  - Product reference: to submit proposals.
- Duty:
  - Air flow rate: to submit proposals.
  - Air velocity: to submit proposals.
  - Initial filter pressure drop: to submit proposals.
  - Final filter pressure drop: 250 Pa.
  - Filter class: to submit proposals.
  - Filter height, width and limiting depth: to submit proposals.
- Flammability: Non-flammable for duration of recommended working life.
- Casing: Rigid.
- Access: to submit proposals.
- Filter mounting frames: Purpose made, rigid, with building-in ties where filter is mounted in walls or partitions.
  - Material: to submit proposals.

330 HIGH EFFICIENCY PARTICLE ARRESTOR (HEPA) FILTERS

High efficiency particulate air filters (HEPA/absolute) shall remove virtually all particles from air.

HEPA filters shall be H14 (EU 14) (unless otherwise Specified) with an efficiency of 99.995% @ MPPS.

HEPA filters shall be of the replaceable panel type with leak proof seals. They shall be installed in a manner that permits on site validation of the filter and its housing. This shall involve the release of a Dispersed Oil Particle (DOP) challenge smoke through an injection point upstream of the filter and a measurement of the DOP penetration across the downstream face.

A photometer shall be used to detect leaks.

The Method of testing/Validation with DOP shall be as set out in SHTM 03-01.

Filter housing and seal (generally Housing shall be Electro zinced steel painted white RAL 9010, seal shall be Silicone or Polyurethane gel) shall be suitable for application.

- Standard: To BS EN 1822.
- Manufacturer: to submit proposals.
  - Product reference: to submit proposals.
- Use of conditioned space: to submit proposals.
- Duty:
  - Maximum air flow rate: to submit proposals.
  - Air velocity: to submit proposals.
  - Filter height, width and limiting depth: to submit proposals.
- Filter media: HEPA filter media - Group H.
- Filter class: H14.
- Filter casing: Provide with gasket fitted to casing.
- Filter material: As above.
- Flammability: Non-flammable for duration of recommended working life.
- Access: Access shall be provided for filter change and DOP test.
- Filter frame material: To suit application, as schedule.

370 EDGE SEALS

- Function: Prevent air by-passing filters. Seals must remain effective after removal and replacement of cells.

380 PRESSURE GAUGES

Each filter shall have a filter dirty alarm filter status and filter dirty alarm. This shall be compatible with the client BMS system:

- Type: Dial.
- Manufacturer: to provide technical proposals.
  - Product reference: to provide technical proposals.
- Gauge markings: Positions equivalent to 'Filter Dirty' and 'Filter Clean' conditions.
- Pressure differential switch: Provide for visual or audio warning of 'Filter Blocked Condition'.

390 TERMINAL FILTER HOUSINGS

- Terminal filter housing shall be easy to maintain, clean housing, able to accept a range of standard diffusers and grilles. The diffuser and colour shall match the other supply and extract diffusers. Before any HEPA filters are installed the ductwork system shall be suitably clean.
  The terminal housings shall have:
  Polyester power coat finish
  Limited travel filter clamps
  DOP/Pd sample port
  Installation hanging brackets
  Fully welded flange
  Top or side circular inlet
  Damaged filters must not be installed in the system.

- Filters housed: HEPA and ULPA.
- Housing seals: Gaskets between holding frames on banks of filters. Seal filters into steel casing.

395 FILTER SAFE-CHANGE UNITS

Where indicated on the drawings supply and install safe change housings complete with all pre and main filters. All housings to be manufactured from seam welded carbon steel with 2 pack epoxy coat finish.

Each filter assembly shall have the following features:-

- Inlet and outlet ductwork connections and support feet.
- Inlet and outlet tight shut off dampers.

Tight shut off dampers shall have seals to KTA 3601 or DIN 25414 (maximum leakage 0.01m³/hr x m² with a pressure differential of 2000Pa). The dampers shall be pressure tight to 5000Pa. The damper mechanism shall be designed such that after closure no energy is required to keep the damper in a closed position. The case and blades of the unit shall be constructed of sheet stainless steel to BS 1449 – Grade 304 – S11 Finish 2B. Bearing assemblies shall be stainless steel or brass. Damper blade sealed shall be neoprene foam rubber material, temperature resistant up to 80°C.

- Manometer points across each filter housing with manometer fitted across the hepa filter. Tappings to be configured to allow for BEMS monitoring of hepa filter condition. Manometer to be mounted on the assembly framework.
- 2 No. stainless steel cam bars for filter location.
- Aerosol sampling point in bottom spigot.
- All necessary safe change bag and retaining ring sets.
- All filter assemblies shall be factory pressure tested to a pressure of 2500Pa for minimum 1 hour and a test certificate provided.
- Leak test devices to DIN 1946 shall also be provided to allow maintenance staff to ensure replacement filters are properly seated prior to operation.
- Each unit shall have:
- Minipleat high capacity absolute filters, 610 x 610 x 292mm deep with MDF case, efficiency to BS EN 1822 grade H14, 99.995%. All filters throughout the development shall be a common grade.
- Hardened case pre-filters 610 x 610 x 60mm to BN 779 grade G7.
- Upon completion of installation, a site validation test shall be carried out to achieve a maximum of 0.005% penetration and certificate provided.

EXECUTION

610 INSTALLING FILTER FRAMES

- Fixing: Securely fasten frames to ductwork walls.
- Gaps around the frames: Seal with mastic sealant.

620 INSTALLING FILTERS

- Mounting: Clamp securely against sealing gasket to prevent leaks.

630 INSTALLING PRESSURE GAUGES

- General: Fix external to unit to allow easy observation, within 3 m of filter.

U84 HEATING AND COOLING COILS PRODUCTS

To facilitate maintenance access, auxiliary wet batteries should be located above corridors or other non-critical areas and not above patient occupied spaces. Access doors shall met the requirements in section U80.

310 LOW TEMPERATURE HOT WATER HEATING COILS

Hot water coils shall be installed as shown on drawings.

Tubes are arranged in a staggered pattern with respect to adjacent rows to provide maximum heat transfer efficiency.

Return bends are the full thickness and diameter of the coil tubes to provide unrestricted flow and undiminished strength Access for cleaning shall be provided to both sides of all coils and batteries.

All water batteries shall be designed to ensure equal flow through all circuits. The water flow and return connections together with the airflow direction shall be permanently marked on the casing. All coils shall be supplied complete with vents and drains. Provision shall be made for expansion of the tubes and for effective venting of the coils.

Coils shall be arranged so as to facilitate removal of the coils without draining local pipework

On large coils, multiple or split coils shall be used to ease installation, repair and maintenance operations.

Heat exchanger finned surfaces shall extend the full width of the coil casing. Coils shall be suitably protected against corrosion with due regard to the geographical location of the coil and local atmospheric conditions. Sealing devices shall be provided around the casing to prevent air by-pass

Casings shall be galvanised sheet steel with angle framing at each end drilled ready to receive the counter flanges on the connecting ductwork. Coils shall be supported so that their weight is not transmitted to ductwork and so they can be removed without disturbing adjacent ductwork. Inspection doors shall be provided on both the upstream and the downstream sides of the coils.

All coils shall be tested at the manufacturer's works or an approved testing laboratory and rated for thermal performance to BS EN 13053 and certificates provided. These tests shall also include confirmation of water pressure drops at the design flow rates. These pressure drops shall be from pipework pressure tapping on the flow and return connections external to the unit.

The maximum water system pressure drop shall be *25* kPa. The maximum air pressure drop across the coil shall be *20* Pa. Any site tests that show either pressure drops above this level shall require the replacement of the coil.

Where auxiliary/re - heater-batteries are located in false ceilings, they should be fitted with a catch tray and leak detection alarm. The catch tray shall be installed under both the battery and the control valve assembly to protect the ceiling from leaks. The moisture sensor and alarm shall be fitted in the tray and shall alarm the clients BMS in the event of a leak.

- Performance: To BS 5141-2 and BS EN 1216.
- Project Co. shall submit proposals for review.
- Materials: Solid drawn copper tubes with copper fins.
- Tube wall thickness: At least 0.7 mm.
- Fin thickness (minimum):
  - Aluminium: 0.4 mm.
  - Copper: 0.3 mm.
- Fin spacing (maximum): As schedule.
- Thermal expansion: Allow for movement.
- Casing finish: Galvanized mild steel.
- Access doors: Hinged, airtight and watertight for maintenance.
- Draining and venting: As specification.
- Water test pressure: Up to 2.1 MPa or 1.5 times the working pressure, whichever is greater.
- Packaging: Fit protection for fins before despatch.
- Protection: Fit blank flanges or caps to pipe connections after manufacture.
- Accessories: As schedule.

320 CHILLED WATER COOLING COILS

Access for cleaning must be provided to both sides of all cooling coils. The coil shall have electro tinned fins.

Coils frames and casings shall be manufactured from stainless steel.

Pipe Connections shall be screwed up to 50mm, flanged above. Maximum velocity over the coils shall be 2m/s.

The coil shall have an eliminator.

All cooling coils shall be fitted with their own independent drainage system. The system shall comprise of a stainless steel drip-tray, glass trap, air break and associated drainage pipework.

The drip tray shall be arranged to drain completely and prevent pooling.

The drain connection shall not have an up-stand. A slope of 1 in 20 in all directions shall be incorporated to the drain outlet position.

Where coils are greater than one metre high intermediate drain trays shall be provided.

The AHU base shall be high enough to accommodate the trap and pipe work fall.

The tray shall be completely accessible or for inspection and cleaning.

Each drip-tray shall be provided with its own drain trap. The drain trap shall be of the clear (borosilicate) glass type.

The trap shall have a means for filling and shall incorporate couplings to facilitate removal for cleaning. It shall be located in an easily visible position where it shall not be subject to casual knocks. The pipework connecting it to the drainage tray should have a continuous fall of not less than 1 in 20.

Water from each trap shall discharge via a clear air gap of at least 15 mm above the unrestricted spill-over level of either an open tundish connected to a drainage stack via a second trap, or a floor gully. A support shall be provided to ensure that the air gap cannot be reduced. Drainage pipework shall be copper.

A baffle device shall be provided in the drip-tray to prevent air bypassing the coil, and the tray shall be large enough to capture the moisture from the eliminator, bends and headers.

The cooling-coil control valve shall close upon selection of low speed, system shut-down, low airflow or fan failure.

The maximum water pressure drops across the coils shall be *30* kPa. The maximum air pressure drops across the coils shall be 80 Pa. Any site tests that show pressures above either of these levels shall require the replacement of the coil.

- Performance: To BS 5141-1 and BS EN 1216.
- Duty: Refer to drawings and schedules.
- Materials: Solid drawn copper tubes with copper fins, all electro-tinned.
- Tube wall thickness: At least 0.7 mm.
- Fin thickness (minimum):
  - Aluminium: 0.4 mm.
  - Copper: 0.3 mm.
- Casing:
  - Finish: Stainless steel
  - Return bends: Provide removable covers. Lag and vapour seal the bends.
- Eliminator plates: Install downstream of all coils.
- Draining and venting: As specification.
- Access doors: Hinged, airtight and watertight for maintenance.
- Water test pressure: Up to 2.1 MPa or 1.5 times the working pressure, whichever is greater.
- Packaging: Fit protection for fins before despatch.
- Protection: Fit blank flanges or caps to pipe connections after manufacture.
- Accessories As schedule.

- Airflow: Evenly distributed over face area of coil (to be verified at commissioning)
- Air velocity: Ensure it is below level at which moisture carryover occurs.

340 ELECTRIC HEATER BATTERIES

Generally electric heating batteries are to be avoided. Their use should be restricted to low power use (for example trimming control).

Where used, electric heaters shall be provided with high temperature cut out protection with automatic reset.

is to provide technical submissions for review.

- Casing material: Aluminium.
  - Casing finish: Natural.
- Access doors: Hinged, airtight and watertight for maintenance.
- Heating elements: Mount on removable terminal plate.
  - Type: As schedule.
- Terminal boxes: Welded steel.
- Safety cut-out switch: Automatic reset, wired in series or via contactor with heating elements.
- Controls:
  - Fan interlock to prevent heater operating without fan running.
  - Run-on timer to allow airflow to cool heater before switching off fan.
- Air flow detector switch: Wired in series with other safety devices.
  - Type: Differential pressure.
- Accessories: Heater batteries to be thyrister controlled.

610 INSTALLATION

- Equipment, controls and instruments positioned next to heating coils: Protect from thermal radiation.
- Fixings: Support coils independently of ductwork.

620 ELIMINATOR PLATES INSTALLATION

- General: Fit to allow removal from coil casing.

U85 HEAT RECOVERY

Thermal wheel heat exchangers shall be incorporated within extract air plants handling uncontaminated air (non hygro-scopic type). These plants shall also include main dirty air extract plants. The heat exchangers shall transfer heat energy within the extract air to a pumped circulation water heat recovery system. Heat exchangers within the fresh air plants shall utilise the recovered heat to pre-heat incoming fresh air.

Where the use of thermal wheel heat recovery units have been found to be inappropriate plate recuperator systems shall be employed.

The heat recovery systems shall be configured to operate at all times when useful energy can be recovered and used by the various air plants.

PRODUCTS

310 PLATE RECUPERATORS

- is to submit proposals for review based upon details shown on drawings, schematics and schedules.
- Efficiency: minimum 55%.
- Heat transfer plates: Manufacturer's standard for application. to provide technical submission.
- Coating: Manufacturer's standard for application.
- Access doors: Hinged, airtight and watertight for maintenance.
- Accessories:
  - Face and bypass dampers;

330 THERMAL WHEELS

- is to submit proposals for review based upon details shown on drawings, schematics and schedules.
- Efficiency: minimum 65%.
- Rotor: Non-hygroscopic.
- Access doors: Hinged, airtight and watertight for maintenance.
- Accessories:
  - Adjustable purging sector;
  - By-pass damper;
  - Matching ductwork flanges;
  - Return air damper; and
  - Speed controller.

EXECUTION

630 INSTALLING DRAIN TRAPS

- Air break: Locate between trap outlet and drainage system.
- Traps under suction: Install the outlet below the inlet by a depth equivalent to at least one and a half times working pressure.
- Traps under positive pressure: Install inlet and outlet at same level.

U86 AIR TREATMENT

Space within air handling units to accommodate future installation of humidification shall be provided only in Operating Theatres, HDU and Critical Care. Close control of humidity is required for the successful operation of sensitive equipment, e.g. computers.

U87 SILENCERS AND ACOUSTIC TREATMENT

PRODUCTS

The attenuators including cross talks, shall be selected and installed by . Project Co. shall appoint a specialist to select these, using the noise criteria detailed elsewhere. The permissible pressure drop on cross talk attenuators is *25* Pa and *50* Pa on other attenuators. is to provide technical submissions for the silencers and acoustic treatment.

310 CIRCULAR SILENCERS

Silencers shall be installed generally as indicated on the drawings.

Silencers shall be of the size, configuration, capacity and acoustic performance required to meet the specified acoustic criteria.

All circular silencers shall be constructed with a galvanized steel casing. All casing seams and joints shall be lock formed and sealed. All fixings to the casing to be with blind rivets to eliminate leakage.

The silencer infill to be covered in ICI Melinex to prevent particle migration. The membrane shall have a 25 year service life.

- Performance requirements: To BS EN ISO 7235 and BS EN ISO 11691.
- Casing: galvanised sheet steel minimum thickness 0.8mm
- Splitters: galvanised perforated sheet screen minimum thickness 0.8mm with an open area of at least 23%.
- Lining material: Inert, fire proof, inorganic and non- hygroscopic minimum density 48kg/m^3.
- Markings: Show direction of air flow on silencer.

320 RECTANGULAR SILENCERS

Silencers shall be installed as indicated on the drawings.

Silencers shall be of the size, configuration, capacity and acoustic performance required to meet the specified acoustic criteria.

All Rectangular silencers shall be constructed with a galvanized steel casing. All casing seams and joints shall be lock formed and sealed. All fixings to the casing to be with blind rivets to eliminate leakage.

The silencer infill to be covered in ICI Melinex to prevent particle migration. The membrane shall have a 25 year service life.

- Performance requirements: To BS EN ISO 7235 and BS EN ISO 11691.
- Casing: galvanised sheet steel minimum thickness 0.8mm
- Splitters: galvanised perforated sheet screen minimum thickness 0.8mm with an open area of at least 23%.
- Lining material: Inert, fire proof, inorganic and non- hygroscopic minimum density 48kg/m^3.
- Markings: Show direction of air flow on silencer.

330 AIR TRANSFER AND CROSS TALK ATTENUATORS

Cross Talk attenuators shall be installed in the ductwork in locations shown in the plans.

The performance of the attenuators shall be such that the privacy shall be maintained between adjacent spaces.

The attenuator shall control noise transfer, in particular speech via the ductwork.

Project Co. shall submit calculations for examination *by the acoustic consultant*.

All cross talk silencers shall be constructed with a galvanized steel casing. All casing seams and joints shall be lock formed and sealed. All fixings to the casing to be with blind rivets to eliminate leakage.

The silencer infill to be covered in ICI Melinex to prevent particle migration. The membrane shall have a 25 year service life.

- Performance requirements: To BS EN ISO 7235 and BS EN ISO 11691.
- Casing: galvanised sheet steel minimum thickness 0.8mm
- Splitters: galvanised perforated sheet screen minimum thickness 0.8mm with an open area of at least 23%.
- Lining material: Inert, fire proof, inorganic and non- hygroscopic minimum density 48kg/m^3.
- Markings: Show direction of air flow on silencer.

The cross talk attenuator shall be installed / located to avoid flanking ideally placed in the ductwork as it passes through the wall separating rooms.

350 ACOUSTIC INSULATION

's acoustic specialist shall examine the need for acoustic lagging. Acoustic lagging shall be provided and fitted where necessary to the outside of the ductwork to achieve an enhanced Sound Reduction Index (SRI) of ductwork and hence reduce noise break in or break out.

The lagging shall consist of mineral wool density not less than 48kg/m3 and not less than 50mm thick.

The mineral wool shall be covered with an outer skin typically lead weighed PVC material or 0.8mm thick galvanised mild steel. All joints shall be suitably sealed to maintain acoustic integrity.

The lagging shall be securely fixed to the pipework / ductwork using mechanical fixings.

- Material: Lightweight mineral wool.
- Outer covering: As specification.

EXECUTION

610 ACOUSTIC LININGS

- Access: Where personnel access is provided, protect acoustic linings to prevent damage.

U88 AIR TERMINAL DEVICES

PRODUCTS

Air terminals shall be provided as indicated on the drawings, or as defined further in this specification.

shall co-ordinate the reflected ceiling plan.

Project Co. shall appoint a specialist supplier to provide the selections and schedules for the air terminal devices. 's specialist shall select the grilles and diffusers using the locations and air volumes shown on the drawing. Project Co. shall submit these for review.

All diffusers and grilles shall be selected for quiet operation, using the noise criteria specified.

Project Co. shall provide samples of each type of air terminal device for review.

Neck velocity shall not exceed 2.5 m/s on any terminal device (diffusers/grilles etc).

310 AIR TERMINAL DEVICES, SPECIALIST UCV HOODS

The UCV shall be a Vertical-flow type system and meet all requirement of SHTM03-01 including figure 6.

The return air grilles/diffusers shall be sited so as not to cause short circuiting. Project Co. shall comply with SHTM03-01 to this regard.

Project Co. shall ensure that each face or each corner of the theatre shall have an air path to provide good air circulation and to prevent entrainment in the clean zone. Air velocities for and over the UCV shall be as SHTM/HTM 2025/03-01 as a minimum. UCV systems shall come complete with HEPA filters. A set of new filters shall be issued to the client following commissioning of the unit.

The final filters shall be installed in a leak-proof housing in a manner that allows the terminal unit, filters and their seals to be validated. A challenge test shall be carried out during commissioning to prove the effectiveness of the complete installation. Challenge test shall be as manufactures recommendations and the Method of testing/Validation with DOP shall be as set out in SHTM03-01.

The UCV shall have direct-reading pressure gauges for each final filter and a return-air filter to capture the relatively coarse particles that would otherwise significantly reduce the life of the final filter. The return air filter shall be G3 grade to BS EN 779 as a minimum.
The UCV shall not exceed NR 50. Any in line attenuation shall non-particle-shedding and fire-resistant.

The functions of the canopy circulation fans shall be continuously monitored by a BMS control unit.

Additional to this the UCV system shall have

- a set-back facility that shall reduce the air supplied through the UCV terminal to a volume that equates to an amount not less than 25 air changes per hour of the operating room's gross volume whilst still leaving the supply AHU operating at full speed;
- a facility to turn off the entire system, the supply AHU and the UCV terminal (an emergency stop is not required);
- a read-out sufficiently large to be clearly visible from the operating table that shows the temperature of the air being supplied by the UCV terminal;
- a read-out sufficiently large to be clearly visible from the operating table that shows the relative humidity of the air being supplied by the UCV terminal;
- a red indicator light that shall illuminate when either the supply AHU or the UCV terminal fails; either or both are switched off or the AHU and UCV terminal are at set-back;
- an amber indicator light that shall illuminate when the UCV terminal is at set-back and the supply AHU is running;
- a green indicator light that shall illuminate when both the supply AHU and UCV terminals are operating at full speed;
- a blue indicator light that shall illuminate when the UCV terminal's HEPA-filter resistance causes the air delivered to fall below 80% of the design flow rate.
- Performance:
  - Mixed flow applications: To BS EN 12238.
  - Sound power levels: To BS EN ISO 5135.
- Performance requirement to SHTM.
- Material: Stainless steel.

325 AIR TRANSFER GRILLES

Transfer grilles shall be non-vision type and sized for a maximum face velocity of 1.5 m/s.

- Grille type: Non-vision.
- Accessories: Transfer grilles shall not be installed in a fire rated door/wall. Transfer grilles in operating theatres shall incorporate a volume control damper to allow adjustment to room pressure

330 DIFFUSERS

Ceiling diffusers shall be installed as shown on the drawings. The diffuser shall be a square ceiling diffuser for flush mounting, comprising diffuser face with mitred perimeter border.

Louvre face diffusers shall be of the four way pattern and shall have adjustable cores to provide horizontal or vertical distribution. The air pattern shall be achieved via the use of directional blanking plates within the body of the diffuser and shall not be visible from the diffuser face. The diffuser shall be suitable for incorporation in a standard ceiling tile grid without overlapping the tile-supporting bar. Diffusers shall be complete with a security chain between the diffuser body and the core and an earth bonding tag.

Ceiling diffusers shall be suitable for direct replacement of 600 x 600 ceiling tiles or an overall size relative to the selected neck size for fitting within a cut tile.

Branches serving individual diffusers shall be provided with a manual volume control damper supplied and fitted by the ductwork installer, in addition to the grille damper where supplied. The duct mounted volume control damper shall be located as close as possible (within 1 duct diameter) of the take-off with the main branch duct.

Where extract is required via ceiling mounted devices louvre face diffusers shall be used. The diffusers shall be similar in construction and appearance to the supply diffusers.

The diffuser shall have fixed air control blades, central fixing screw with decorative cap and an opposed blade damper adjustable from the front face.

The plenum box shall be galvanised sheet metal with a rubber lip seal.

The plenum box shall have fixings for suspending the assembly from the ceiling slab.

The plenum boxes shall be suitable for side or top entry as required.

The diffuser face shall be extruded aluminium sections, natural anodised rear ancillaries in formed sheet steel, surfaces phosphate treated and stove-enamelled.

Supply and extract diffusers shall be at a distance from one another to prevent short circuiting. Supply diffusers shall be located away from one another to prevent two opposing air streams meeting and causing drafts, the individual velocities shall not be greater than 0.25 m/s.

- Performance:
  - Mixed flow applications: To BS EN 12238.
  - Sound power levels: To BS EN ISO 5135.

340 LAMINAR FLOW PANELS

Laminar flow panel diffusers shall be provided in operating theatres with a footprint that encompasses the operating site to produce a downward-displacement parallel-flow air distribution.

Diffusers, of all patterns, to operating theatres shall achieve the required velocity at the operating table position of between 0.2 and 0.3 metres per second, and achieve good air distribution throughout the remainder of the room. Particular care shall be taken to ensure that in a heating mode air discharge velocity overcomes the buoyancy of the air to achieve the required velocity at the operating table position.

The ventilation distribution arrangement must take priority over the layout of luminaires and pendants, etc.

350 TOILET SUPPLY AND EXTRACT VALVES

Extract from toilets, bathrooms and showers shall be via exhaust air disc valves. Each valve shall be constructed from sheet steel and provided with a stove-enamelled finish. The centre disc valve core shall be mounted on a threaded adjustable centre spindle complete with locking nut to provide air volume flow rate adjustment.

The centre disc assembly shall be mounted in a profiled outer ring complete with an edge seal and tamperproof sub-frame.

Generally each valve shall be installed within a cut tile. Each valve shall not require a plenum but shall be connected into a section of rigid ductwork before any flexible is used.

Each branch connecting to individual valves shall be provided with a manual volume control damper fitted as close to the upstream branch connection as possible.

360 DIFFUSERS, LINEAR

Linear diffusers shall be installed as shown on drawings.

They shall be made from aluminium extrusion, natural anodised.

Diffusers shall come complete with end caps and air control blades.

The diffusers shall have a rear mounted plenum box fitted with a side entry spigot and suspension brackets to hang the complete assembly from the ceiling.

The plenum box shall be fitted with a volume control damper adjustable from the diffuser face and be made from galvanised sheet steel.

- Performance:
  - Mixed flow applications: To BS EN 12238.
  - Sound power levels: To BS EN ISO 5135.
- Diffuser: Slot.
- Material: Aluminium.
  - Finish: Anodized.

370 DIFFUSERS, SWIRL

The swirl diffusers shall be adjustable in square or circular face plates with swirling horizontal discharge of supply air with high induction.

Diffusers shall consist of a pressed front face with radially angled air discharge sections incorporating adjustable directional air control blades.

Diffusers shall be complete with a plenum box with circular top or side entry spigots and volume control damper. The Plenum box shall be supplied with fixed hanging brackets.

The face plate shall be galvanised sheet steel with the surfaces pre-treated and powder coated white (RAL 9010).

The control blades shall be made from Polystyrol coloured black or white as required.

The plenum box is made from galvanised sheet steel with a rubber lip seal.

The plenum box shall be galvanised sheet metal with a rubber lip seal.

The plenum box shall have fixings for suspending the assembly from the ceiling slab.

The plenum boxes shall be suitable for side or top entry.
Supply and extract diffusers shall be at a distance from one another to prevent short circuiting. Supply diffusers shall be located away from one another to prevent two opposing air streams meeting and causing drafts, the individual velocities shall not be greater than 0.25 m/s.

- Performance:
  - Mixed flow applications: To BS EN 12238.
  - Sound power levels: To BS EN ISO 5135.
- Material: Galvanized steel.
  - Finish: Epoxy resin powder/ hardener coating.

390 GRILLES

Grilles shall be installed as shown on the drawings.

The grilles shall be made from extruded aluminium sections. The finish shall be as RAL number. Grilles shall be selected for quiet operation.

Grilles, shall have corner mitres and rear perimeter sealing strip with profiled front blades.

Sub frames shall be used where required.

- Performance:
  - Mixed flow applications: To BS EN 12238.
  - Displacement flow applications: To BS EN 12239.
  - Sound power levels: To BS EN ISO 5135.

400 CEILING VENTING GRILLES (CVG)

Ceiling venting grilles shall be provided along the main distribution routes for medical gas and natural gas pipework.

Ceiling venting grilles shall be of similar construction and arrangement to the supply diffusers. The diffuser body only shall be provided for these items.

The minimum size of CVGs shall be 150 x 150mm.

410 PLENUM BOXES, CEILING OR WALL MOUNTED

Plenum boxes shall be made of 0.7mm Galvanised steel plenum.

Spigot construction shall be a top or side entry plenum option robustly fabricated plenums shall come complete with all necessary fixing angles for drop rod support.

- Duty: To match grille and diffuser.
- Configuration: Single plenum box or a series of plenum boxes butted together to form a continuous length.
- Construction: Sturdy and rigid with circular inlet spigots of 65 mm minimum length.
- Fixing: Incorporate means for fixing to, or suspending from, building or other construction.

EXECUTION

610 INSTALLATION

- General: Do not distort air terminal devices. Fix securely.
- Air leakage: Prevent. Seal joints with self adhesive foam strip or equivalent.
- Appearance: Finish visible edge joints neatly. Do not leave sharp edges and protruding screws.

620 FIXING CIRCULAR AND RECTANGULAR DIFFUSERS

- Method: As per manufacturer's instructions and specification.

640 FIXING LINEAR AND SLOT DIFFUSERS

- Method: As per manufacturer's instructions and specification.

650 FIXING FLOOR MOUNTED SWIRL DIFFUSERS

- General: Fit flush with finished floor.
- Method: As per manufacturer's instructions and specification.

660 FIXING GRILLES

- Method: As per manufacturer's instructions and specification.

670 OPERATION

- General: Fit so that moving parts operate correctly and removable cores can be taken out and replaced.
- High level and ceiling applications: On removable cores, provide safety wires with quick release ends.

680 BLANKING PLATES

- Location: Where needed to restrict projection of air flow from section of grille or diffuser.

Specification Check / Revision Sheet

Project	**RHSC and DCN Edinburgh Hospitals**	Project Number	**G1547**
Service (s)	**Mechanical**	Sheet	**WW AP.1.2.18 SMcK G1547**
Performance Specification Title	**CHP Systems**	Date	**August 2014**
Prepared By	**BR**	Checked By	**SMcK**

Revision Ref.	Date of Revision	Page N$^{o(s).}$	Revision Details	Checked By
FT	December 2013	All	Final Tender	SMcK
FC	July 2014	All	Updated for Financial Closure	SMcK
FC	August 2014	All	Comments Incorporated	SMcK

RHSC and DCN EDINBURGH
COMBINED HEAT & POWER SYSTEM

CONTENTS

1.0	**GENERAL INTRODUCTION**
2.0	**SCOPE**
3.0	**SPECIFIC EXCLUSIONS**
4.0	**APPLICABLE STANDARDS**
5.0	**DESIGN CRITERIA**
6.0	**LIAISON**
7.0	**MECHANICAL**
8.0	**ELECTRICAL**
9.0	**CONTROLS**
10.0	**TESTING, COMMISSIONING & HANDOVER**

1.0 GENERAL INTRODUCTION

Purpose of Document

The development of the scheme, manufacture, supply, installation, wiring, setting to work and commissioning of the works described in this document shall be undertaken by

Project Co. shall obtain the necessary supporting documentation.

This specification relates to the CHP installation to be provided as part of the Energy Centre works. It shall be read in conjunction with the other specifications issued as part of the overall works.

This specification shall be read in conjunction with all other mechanical and electrical engineering services specifications and the architectural drawings.

Description of Project

The new facility shall re-provide services from the Royal Hospital for Sick Children, Child and Adolescent Mental Health Service and the Department of Clinical Neurosciences in a single building adjoining the Royal Infirmary of Edinburgh at Little France.

The DCN part of the Facilities will have a physical link with the existing RIE Facilities specifically with the critical care unit.

The building is generally constructed from reinforced concrete.

The basement houses FM support facilities and the main building services heat distribution centres and electrical plant rooms.

Ventilation plantrooms are generally located at roof level and level 2,

A central Energy Centre shall be provided to the South of the hospital housing heating, CHP, standby generation, fuel storage and utility incomers.

Drawings

As part of the development of the scheme Project Co. shall prepare co-ordinated working drawings which shall include general arrangement drawing sections, elevations and schematics, of the works to be provided. These shall be based on the Architect's base drawings and coordinated with other services and building elements.

2.0 SCOPE

The scope of work covered by this specification is for single CHP generating system including but not limited to the following:-

- Gas fired reciprocating engine
- 11000V alternator/generator
- The provision of Low Temperature Hot Water
- Controls with computer supervision backed up by UPS c/w standby
- Full communication interface with the on-site Building Management System and Electric Network Management System
- Metering equipment to assess heat and electricity output
- Metering equipment to assess heat dumped
- Metering equipment to assess gas intake
- Metering software in the controls strategy to determine the CHP quality index as defined by Inland Revenue and carry out energy efficiency evaluations
- Mains synchronising equipment
- Operation and protection to MV system in accordance with G 59.2
- Electric motor starting system
- Power isolator
- Fuel handling system
- Fuel cut-out system
- Neutral Earthing Resistors and associated controls
- Acoustic enclosure
- Acoustic equipment
- Forced air ventilation system for the enclosure
- Flue exhaust system with support structure
- Acoustic measures including inlet and outlet attenuation
- Lighting, emergency lighting and small power in the enclosure to facilitate maintenance operations
- Fire and gas detection activated safety fuel shut-off valves
- Site mechanical and electrical installations including all connections between the components in the scope of this contract and interfaces to the site systems
- Testing
- Setting to work
- Commissioning
- Demonstration that the system meets good quality CHP, either making sufficient heat demand available at the Buffer Vessel or via use of the heat dump unit as a simulating facility. This shall include the provision of all necessary meters, including:
  - Heat
  - Power
  - Gas

3.0 SPECIFIC EXCLUSIONS

Fire alarm systems, and telecommunications systems requirements that do not form part of the CHP installation are generally covered in separate documentation, for the provision by others.

4.0 APPLICABLE STANDARDS

All elements of the works shall be designed and installed in accordance with the requirements of SHTM 06-01, IEE Wiring Regulations BS 7671 (17th Ed.), current legislation, regulations and industry standards, including British Standards unless otherwise stated.

The complete installation shall comply with the requirements of CHPQA (Department of Energy and Climate Change Quality Assurance Programme).

5.0 DESIGN CRITERIA

Under normal conditions the CHP unit is to run to assist the LTHW demands of the heating system. The electrical power generated from the production of the Low Temperature Hot Water demand shall be used to serve the Hospital's electrical power system. With this in mind, the switching on, off and stepping up/down of the CHP units shall be matched to the requirements of the LTHW system.

The CHP unit shall however be controlled so it does not export power above any agreed limit from the RHSC & DCN electrical systems to the SPEN supply network.

6.0 LIAISON

Project Co. shall include for liaison with:-

SPEN. Project Co. shall include for liaison with SPEN to ensure the requirements for parallel operation of the CHP units and the mains incoming supplies are met.

Health and Safety Professionals. As well as the Health and Safety requirements of this specification, Project Co. shall include for close liaison with Health and Safety professionals including the Hospital's Health and Safety Advisors and the CDM Co-ordinator and shall comply with the CDM Regulations and all Health and Safety Regulations.

Project Co. shall satisfy themselves of the suitability of the products and installation details being provided by other specialists.

Building Control. Project Co. shall liaise, with and adhere to, the requirements of the Building Control Officer.

Any other member of the Project and Board teams concerned with the planning and administration of the installations.

7.0 MECHANICAL

7.1 Air for Combustion & Cooling

A fan assisted ventilation system shall be provided for combustion, to dissipate heat build up within the CHP enclosure and the rejection of waste heat (e.g. from any low grade water).

Incoming ventilation air shall be ducted from louvres located on the external elevation to inside the CHP enclosure. The exhaust from the CHP enclosure shall be fan assisted ducted to the external louvres on the north wall.

Automatic multi-bladed dampers shall be provided on the inlet and discharge. The dampers shall be arranged to open on the start signal for the appropriate CHP and to close once that engine has stopped running and residual heat dispersed.

In addition a radiator coil shall be located in the ductwork, to reject low grade waste heat. This is in addition to the CHP Heat Dump facility from the Low Temperature Hot Water.

The ventilation system shall be designed, installed and set to work within the following criteria:-

a) Taking into consideration the louvre sizing and types provided, considering noise, vibration, velocity and pressure drop.

b) The intake air temperature to be used in calculating the air requirements shall be 30°C.

c) The maximum *summertime* air temperature exhausted from the louvres shall be based upon the heat dissipated from the unit and shall be no more than 50°C.

d) The maximum air volume *for combustion and cooling shall be advised by the supplier.*

e) The ductwork design and installation shall meet the requirements of Heating and Ventilation Boards Association Document DW144.

f) *The ventilation system shall* keep the CHP enclosure close to the optimum temperature for the effective operation of the CHP units. Therefore in winter, the heat from the CHP can be used to keep the enclosure warm, but *this should* not *be* above 30°C or *shall be* as required by the CHP manufacturer.

g) Acoustic details mentioned in later sections.

7.2 Sound Attenuation

Acoustic Enclosure

An acoustic enclosure shall be provided to the CHP unit. The acoustic enclosure shall include:-

- Acoustic lining
- Access doors to enable full maintenance of the CHP unit
- Air inlet and air discharge ducts connecting the enclosures to the external louvres
- Air inlet and discharge attenuators with automatically opening and closing dampers on the internal faces of the units

The discharge air paths shall be sealed against the building fabric to prevent leakage back into the CHP room.

The Tender shall be inclusive of the design, supply and installations of the acoustic enclosure to house the CHP engine plant, and confine ventilation of the CHP plant to within the enclosure.

The CHP acoustic enclosure shall form part of the route for ventilation air to avoid the need for ventilation of the entire plant area. Project Co. shall provide all necessary intake and discharge attenuation to achieve noise levels stated.

The acoustic enclosure size shall be developed to ensure that it:

- Co-ordinates with other services in the room
- Co-ordinates with the building fabric and structure
- Allows maintenance to all plant and distribution systems as detailed within the SHTMs

Project Co. shall give due consideration to the need to maintain maintenance access around the entire CHP enclosure and allow for ducting ventilation air accordingly. Internal access and spatial arrangements shall be adequate to allow all maintenance functions and repairs.

The acoustic enclosure shall achieve maximum breakout noise levels within the CHP room of 65 dBA at 1 m from the enclosure.

The enclosure shall be provided with adequate access doors for plant servicing and replacement of major components. Access doors shall have emergency escape panic facilities in the event that personnel become trapped.

Inlet and Discharge Attenuators

The necessary attenuators for the CHP room are to form part of the Sub-Contract works and Project Co. shall take account of the pressure drop across/through them when selecting/sizing the air attenuators and fans for the CHP acoustic enclosures.

Attenuators shall be of the dissipative type and constructed of specially selected high quality materials.

Outer casings shall be made of galvanised sheet steel.
Each unit shall be constructed to prevent air leakage. Internal splitter units shall have aerodynamic leading and trailing edges to reduce pressure drop across them.

The acoustic infill shall be of inorganic high density bonded long stranded rock wool sufficient to obtain the specified acoustic performance and packed under compression to eliminate voids due to vibration and settling. Infill material shall be insect, vermin and moisture proof.

The attenuators shall be manufactured in modules to enable them to be removed and replaced so that major maintenance works can be carried out, and to enable initial installations to be achieved.

The module shall have a rolled steel angle frame and shall be capable of free standing without distortion, sagging or mechanical damage.

Provision shall be made to allow fixing of mechanical and acoustic seals. The module shall be located firmly in the builders work opening.

All attenuators to have double skin casings on all four sides to prevent flanking.

CHP Flue Exhaust Attenuators

Provide attenuation within the exhaust flue system to reduce noise, at source, to the acceptable level of 60 dBA at 3 m from the flue. The CHP flue and exhaust attenuator to outside the acoustic enclosure, for connection shall be extended by the flue Installer.

Locate attenuation within the CHP Room.

Louvres

Project Co. shall liaise with the louvre manufacturer/supplier to ensure that their scheme takes full consideration of the louvres being provided. Project Co. Project Co. shall ensure that the fans provided with the CHP package are able to overcome the pressure drop through the louvres. Project Co. shall ensure that the CHP system, including noise generated velocity, pressure drop and noise, by or through the louvres, meets the design criteria.

7.3 Heating

The CHP units shall be used to generate low temperature hot water.

The CHP unit shall be connected in parallel and be piped to serve the Energy Centre.

The CHP units shall act as the lead boiler and feed the LTHW into the Primary Return header.

Circulation/shunt pumps shall be provided for the CHP unit to suit the flow rate and pressure drop into the LTHW system. The pumps shall be part of the CHP package and located within the Acoustic Enclosure.

The primary purpose of the CHP is to provide low Temperature Hot Water. In instances where there is insufficient LTHW demand for the boiler systems, then a CHP unit shall switch off and any residual heat shall be dumped via dry air coolers on the roof/wall of the Energy Centre. The dry air coolers are to be provided within the CHP package.

The BMS shall provide the CHP control system with the required LTHW load. The CHP controls system, shall modulate to ensure that the required load is provided.

The CHP Unit shall be controlled by their own controls system to provide a constant 85 °C flow.

Whilst the output from the CHP unit shall be modulated by the CHP controls system varying the speed of the unit's engine, the CHP pumps shall also be inverter driven. This is to allow the output from the unit to be modulated between 50 and 100%.

The CHP Unit shall be provided with a duplicate *variable flow* circulating pump set to circulate water through its associated CHP Unit and to the Primary LTHW header. A motorised valve on the inlet to the CHP Unit shall close when the CHP Unit is not enabled to run. Upon receiving an enable signal the valve shall open and auxiliary contact on the valve shall then enable the CHP Unit pump to run. Upon CHP Unit shut down the duty pump shall be run only when the CHP Unit is signalled to run by the sequence controller. The CHP Unit pump set shall be monitored by differential pressure switches.

The CHP unit shall be interlocked with the CHP pumps.

The design return temperature for the return to the CHP is 75 °C. Should the temperature rise above 80 °C then a three port heat dump control valve shall open to divert some of the water around the roof/wall mounted dry air coolers, until the return water temperature to the CHP units has been reduced back to 75 °C. The control of the dry air units themselves shall be by the CHP control system. The fans on the dry air coolers shall modulate to reject the unwanted heat.

The CHP *tenderer shall advise of any limitations with regards the maximum number of 'starts' over a 24 hour period.*

Each CHP unit shall have its own integral safety controls and high temperature lock out thermostats.

The temperature differences shall be adjustable to permit flexibility of operation during commissioning and general use.

The operational sequence shall allow all the control set points to be adjusted in line with the common boiler system flow temperature, as it is modulated relative to the building loads. *The operational sequence set points shall be interlocked with the CHP set points so that the performance of the CHP is not inhibited.*

When a CHP is shut down by the control system, water shall continue to pass through the CHP unit for a period of time (variable) to dissipate stored heat, at which point the CHP pump shall shut down and the motorised valve close.

Any fault that prevents the CHP from operating shall be raised as a high priority alarm.

The CHP controls shall also monitor the gas safety valve circuit.

The CHP, boilers and primary heating system shall all operate on a 24-hour continuous basis and therefore shall not be time clock controlled.

The CHP controls shall monitor the time operation of the CHP and the software shall include pump sequencing on an hours run basis.

In the event of a mains power failure, the controls shall arrange for the CHP system to restart immediately on power restoration. The CHP controls shall, by communicating with the ENMS and by monitoring of the electrical power supply and standby generators, be aware that the original shut down was not a plant fault and be ready for a sequence re-start.

In maintenance mode only the CHP shall operate on their own integral thermostats, under manual switches, but with all safety features in place to provide emergency usage in case of a BMS or controls fault.

The CHP controls shall monitor the inlet gas pressure and/or a failure of pressure, raise alarm and shut down the CHP.

The Specialist shall supply and install a common gas pressure sensor within the circuit serving the CHP units to detect loss of gas supply.

In the event of the CHP controls system monitoring a gas fault on the unit and the common gas pressure sensor signalling the required pressure, the CHP system shall automatically shut down the CHP unit.

The Specialist shall provide flue temperature sensors to monitor the temperature of flue gases within the CHP flue.

The following shall be provided by the CHP Controls system, for monitoring by the BMS:

- Grid voltage.
- CHP generator voltage.
- Grid frequency.
- CHP generator frequency.
- Synchroscope.
- Ammeter
- KWH meter.
- Engine tachometer.
- LTHW Flow Temperature
- LTHW Return Temperature
- kWhrs being dumped via the Dry Air Cooler heat rejection system
- Heat Rejection Flow Temperature
- Heat Rejection Return Temperature

7.4 Base Frames

The base frame of the CHP units shall be fabricated from mild steel sections and designed to carry and distribute the weight of all the components, without undue distortion or deflection, both when in use or in transit. The base shall be complete with all necessary holding down points, jacking points and lifting points. A suitable paint finish shall be applied at works to the whole of base frame.

All dynamic components mounted on the base frame, i.e. engine, shall be complete with anti-vibration mountings.

The engine shall be fitted with torsional damping to minimise dynamic vibration.

The complete unit shall be mounted on an inertia base designed, supplied and installed by .

Project Co. shall also identify the floor loadings required for the replacement of major plant items, e.g. alternator.

7.5 Engines

The packaged CHP set engine shall be of proven design specifically intended for static industrial power generation, with low operating stresses and an anticipated life in excess of 20 years. All wearing components such as bearings, valves, seats, pistons etc. shall be replaceable and readily available.

The engine shall be suitable for use with natural gas and shall be supplied complete with all necessary control valves, safety valves, low pressure cut off valves, and safety valve test and gas purge points as required by the design and shall not be less than those required to comply with all aspects of British Gas Publications including IGE/UP/3. All connections to the engine shall have flexible connections to stop vibration being transmitted to other equipment. The engine shall be complete with a pressurised oil lubrication system, cooling system complete with pump and all necessary controls to avoid damage due to overheating or oil pressure failure.

The engine fuel control system shall maintain the air fuel rates to the engine within the flammability level of natural gas under all load conditions.

The units shall be low Nox type to achieve Nox emissions of less than 500mg/m^3 (at 5% oxygen).

7.6 Primary Fuel Supply

The fuel supply to the CHP unit will be natural gas at a pressure of approx. 65 mbar.

Facility shall be provided on the engine for the connection of the gas supply.

The fuel supply pipework shall be brought within the CHP plant room by others. Final pipework runs and connection shall be by . This shall include flexible connections to prevent damage due to engine set vibration.

Flexible connections shall be in accordance with the Code of Practice for Natural Gas Fueled Engines, British Gas IGE/UP/3:

1. A length of flexible pipe shall be incorporated in the gas supply to the engine to isolate any vibration, whilst being as short as is practicable.

2. The flexible pipe shall be sited downstream of at least one of the safety shut-off valves.

3. The flexible pipe shall be of metal reinforced and preferably armoured construction, suitable for continuous use at 3.5 Bar (50 psi) or three times the working pressure, whichever is the greater.

4. The flexible pipe shall be able to withstand engine suction without sustaining damage.

5. The flexible pipe shall be installed in a position where it shall not be weakened by heat from the engine system.

6. The flexible pipe shall be installed so that it is not subjected to tension, torque or other forces likely to cause damage.

7. Adequate means shall be provided for sensitive test for gas tightness of the flexible pipe and its connections. Full consideration shall be given so as to ensure that leakage tests can be performed frequently as part of the scheduled maintenance procedure of the plant.

7.7 Heat Recovery

Heat recovery from the CHP set is to provide low temperature hot water.

The packaged CHP set shall be complete with on-set heat exchangers for heat recovery from the various circuits. The exchangers will be complete with all associated pumps, pipework, controls, sensors, etc to provide a complete fully functioning system, suitable for connection to the external heat recovery/rejection systems detailed elsewhere in this specification.

7.8 Exhaust Systems

The Tender shall be inclusive of the design of the exhaust system from the CHP set. This shall include exhaust gas heat exchanger, attenuation and exhaust. shall work with the specialist providing the flue exhaust. Project Co. shall provide the exhaust system, including silencers to the centre core wall. The flue specialist shall provide the flue from the centre core wall (on the side within the plantroom) to the termination point on the external flue/chimney arrangement.

Project Co. shall be responsible for the design of the whole exhaust systems installation. This shall include ensuring that the back pressure of the total exhaust system, exhaust gas heat exchanger, silencers, exhaust ductwork/pipework are within acceptable limits for the CHP engine.

The internal exhaust shall be run using thermally insulated and metal-clad mild steel tube exhaust system.

Project Co. shall include for the supply and installation of all associated exhaust system components including silencers, hanger supports, expansion compensators, drain points, explosion relief panels, flame quenching devices etc.

The number and type of silencers shall be determined from the noise criteria stated for the plant both internally and at relevant site boundaries as noted below.

It shall also be ’s responsibility to ensure that the whole of the exhaust installation is suitable for the range of temperatures and conditions applicable to the operation of their plant.

The whole of the engine exhaust system silencers and any flexible exhaust connections fitted to absorb engine vibrations shall be of sufficient strength to withstand the effects of sudden internal pressure rises such as those caused by back firing.

To reduce heat loss from the exhaust, excessive heat gain into the plant area and provide safe surface temperatures, the exhaust system is to be insulated throughout.

Project Co. shall therefore include in the Tender for insulating the engine exhaust system, including silencer(s) provided with the CHP unit.

The insulation including the silencer to be clad with plain finish Aluzinc sheet and the surface temperature of this cladding shall be below 50°C in accordance with BS.3316.

7.9 CHP Heat Dump Facilities

At some site part load conditions, it may be necessary to dump heat from the CHP plant in order to eject residual unwanted heat from the system. To allow this to take place a heat dump facility shall be provided by via a roof/ wall mounted dry air cooler.

The allowance is for a total of 300 kW of heat to be rejected via a dry air cooler, which accounts for 50% of the CHP unit heat.

Auxiliary cooling circuits shall include all fans, pumps, pipework and controls etc. to enable continuous plant operation. Where the pipework is external, it is to be fitted with trace heating.

Project Co. shall verify that this is sufficient for their needs, prior to finalising their design and/or starting manufacture.

7.10 Lifting Facilities

Project Co. shall include for the provision of lifting facilities, as required for the maintenance of the plant. Lifting beams shall be certified with maximum safe working loadings in accordance with statutory regulations will be provided by others.

7.11 Access Platforms and Ladders

Project Co. shall provide platforms and ladders to enable safe working access to all parts of the plant and particularly high level equipment. All platforms and ladders shall comply with the requirements of:-

BS.4592
BS.5395
BS.5950
BS.3049
BS.4211
and all other relevant codes of practices.

7.12 Oil Tanks

Project Co. shall provide an appropriately sized clean lubrication oil tank and similar dirty oil tank. This shall include automatic pumping facilities and all interconnecting pipework and controls. Each tank shall be double skinned, so as to have its own bund, in order to meet the latest requirements of the Scottish Environmental Protection Agency Oil Storage Regulations.

8.0 ELECTRICAL

8.1 Outline for Electrical System

The CHP unit shall normally run in parallel with main incoming MV supply to the Hospital. If either side (A or B) of the Hospital's 11000V systems are being supplied from the Hospitals standby generators then the CHP unit will normally be disconnected from the 11000V distribution systems and shut-down. The CHP unit shall not operate when the standby generators are in operation.

If the electrical load of the hospital is reduced to the level where the CHP unit is in danger of exporting power above the agreed threshold to the SPEN network the CHP, will be automatically ramped down and if necessary isolated. To achieve this it will be necessary to link the CHP controls to the BMS energy metering of the incoming supplies and set a level which individual CHP's are isolated.

The control of the MV circuit breaker through which the CHP unit connects to the MV site distribution systems shall be controlled by both the CHP control systems and the Electrical Network Managements Systems (ENMS). These controls/interfaces shall:-

- Ensure the CHP's neutral earthing resistor is in circuit while the CHP run up to speed and synchronise with the busbar voltage is then switched out of circuit as the CHP is paralleled onto the bus bar.
- The CHP MV circuit breaker (on the Energy Centre MV panels) cannot be closed unless both:-
    - The CHP controls signal the CHP is synchronised with the bus-bar voltage

The low voltage connections required for the CHP enclosure lighting and small power, battery chargers etc will be derived from the 400V 50z Three phase, Neutral and Earth systems serving the Energy Centre.

8.2 Wiring on Engine/Generator Unit

All wiring shall be:-

Carried out with LSF cable suitably bushed and having stranded copper conductors of adequate mechanical strength and current carrying capacity, with a minimum of 1.5mm² csa.

Adequately supported and protected from accidental damage, properly installed and terminated in suitable terminal boxes with flexible connections. Special arrangements are to be made where wiring is subject to movement and vibration.

Segregated for different voltages and where necessary to avoid `pick-up' from adjacent wiring.

8.3 Power Cabling and Terminations

All power connections between the CHP set and the switchboard shall be undertaken by . The connections shall be sized to carry all normal operating currents and safely withstand all potential fault currents at their point of installation.

Specification of 11 kV Cables

MV cables from the CHP to the 11000V switchpanel shall be XLPE insulated, copper conductors, steel wire armoured with pvc outer sheath to IEC502 and rated at 11000 volts.

The cores of all MV cables shall be permanently marked to indicate phases.

Cable Installation

01. General

New cables shall be installed joint-free.

02. Single Core Cables

Single core cables shall be provided c/w wire armour and copper tape screen.

Single core cables shall be laid in trefoil to reduce magnetic field induced interface.

03. Cable Termination

MV cable glands shall be rated above the prospective fault current of the system to which they are assembled. Glands shall have integral earth lugs to which equibonding copper strip shall connect to the main earth bar.

MV cable boxes shall be made of fabricated steel and air insulated termination up to 11kV. Spacing between terminals shall conform to BS 4999/145 and IEC standards for the rated voltage.

All MV terminations and terminating cable tails shall be encapsulated in heat shrinkable insulation rated at the cable voltage. Heat shrinkable insulation shall be guaranteed by a reputable manufacturer.

Terminations shall be permanently marked to indicate phasing. The far and near ends of cables shall be tested by continuity meter to confirm correct phase rotation.

04. Single Core Cables

Single core cables shall be glanded at non-magentic gland plates.

On long runs of single core cables insulated terminating glands shall be used.

The open circuit induced voltage between cable armour and earth shall not exceed 25 volts when full load current flows in the cable.

8.4 Earthing Systems

The whole of the electrical systems shall be earthed and bonded to accord with the requirements of BS 7430, BS 7671 and Scottish Power Energy Networks (SPEN). The requirements for this are interpreted onto the drawings accompanying this specification.

Under mains supply conditions the systems shall rely on SPEN's earth.

Under standby generator only conditions when all standby generators are operating in parallel the systems shall be earthed to one generator's neutral via the appropriate neutral earthing panel and its MV resister.

When the standby generator systems are operating as two 'unparalleled groups, each group shall be earthed to separate standby generators via each groups neutral earthing panel.

The CHP unit shall, however be provided with suitable Neutral Earthing facilities to enable it to be run to speed and tested off line.

The neutral earthing panels shall be equipped with a spare/paralleled circuit earth resister in a separate compartment such that one can be removed while the other is in use.

The CHP's neutral earthing shall be controlled by the CHP.

Two sets of earthing rods shall be provided to form a connection for the MV system to the general mass of earth. These shall each comprise a minimum of 4 No parallel earth electrodes driven to depth of 4.8m and contained in concrete inspection chambers. The minimum resistance to earth of each set of earth electrodes is 1 Ohm. Where this is not achieved then either additional earth rods shall be installed or the installed units shall be driven deeper.

The CHP unit shall not operate in isolation of the mains or the generators, except for testing purposes. For clarification the CHP unit shall not operate in island mode.

9.0 CONTROLS

9.1 Automatic Controls

The Controls for the CHP shall comply with the BMS specifications.

The complete electrical controls system for the CHP set shall be designed, supplied and installed by . The Controls for the CHP shall interface seamlessly with the Building Management System in all areas of monitoring and Control. The controls shall be open protocol.

A control panels shall be provided, at the end of the CHP unit to control the CHP, with a further panel to both co-ordinate the operation of the CHP unit and to communicate with the BMS. Selected information, set points, controls strategies, *maintenance mode* etc. that can be viewed and changed at the CHP panels shall also be viewed and changed at the BMS end.

All panels shall be manufactured and finished to the same specification to form a uniform suite.

The CHP set control panel suite shall comprise separately identifiable sections to provide the following functions:-

(a) Mains circuit breaker section.
(b) MCC section.

(c) Controls section.
(d) Battery panel.

Note: The MV circuit breaker will be located in the MV switchboard.

Synchronisation with site operating from REC supply.

The site shall be connected with the local REC grid through the CHP supplier automatic circuit breaker. Circuit breakers connecting CHP generators with the site medium voltage system will be open. Generators will not be running.

The CHP set is started and run up to speed set point. Automatic synchronising equipment shall govern the generator voltage, frequency, and phase until they match the grid parameters. All conditions shall be ensured prior to automatic synchronising equipment closing the generator circuit breaker.

Sequence of events when the set is running in synchronisation with grid

The CHP is planned to provide supply to a base load and operate only in parallel with the local public network. The unit shall shut off in the event of loss of mains, and shall not normally operate while the emergency generators are running. It is intended, however that the CHP shall operate when the generators are being tested.

Protection relays in compliance with the requirements of G59.2 shall be provided on the 11000Volt circuit breakers.

Excess electricity shall not be exported to the grid above the agreed limit. The CHP Controls shall adjust the electrical power output to avoid export above the agreed limit of power to the REC grid.

9.2 11000V Isolator

Voltage	11,000 V
Bus Bar Rating	630 A
Rated Short-Time Withstand Current	25 kA for _ seconds
Maximum Ambient	40°C

9.3 Motor Control Centre

The CHP unit shall be provided with an MCC panel located on the outside of the unit.

All major motor loads shall be controlled and protected through a Motor Control Centre (MCC). The MCC shall be dedicated to control motors and LV electrical loads associated with the CHP set only.

All motor gear shall be grouped into a Motor Control Centre which shall comprise of form 3b type 2 of enclosure to BS EN 60439-1&2.

The MCC shall be capable of withstanding short circuit currents of 50kA - (35MVA at 400V for one second) ASTA certified to BS.EN 60439-1&2.

Where an Installer cannot comply with this Standard, he must clearly state his intended deviation at the tendering stage.

The electrical symbols used in the circuit diagrams are to be to British Standards.
Final reproducible copies of circuit diagrams and layout drawings shall be submitted after satisfactory commissioning.

Busbars

The busbar system shall be manufactured from hard or medium hard drawn high conductivity copper, including the auxiliary busbars.

The bars shall be rigidly supported by insulators of a high electrical and mechanical strength suitable for the withstand values specified.

Any access plates to the busbar chamber should be suitably marked with appropriate warning labels and when any such access plate is removed, it should reveal busbars suitably marked with phase colours and labels “L1”, “L2” and “L3”.

The busbar system shall not contain any internal interconnecting or outgoing cabling.

Main Isolator

A main isolator shall be provided in the MCC. The isolator shall be capable of interrupting the total stalled motor current from the MCC without deterioration.

The isolator shall be interlocked with the panel door and shall have facilities to padlock it in the `off' position.

The incoming supply shall terminate directly onto the main isolating device. Termination points shall be fully shrouded and suitably labelled.

Separate ammeter and voltmeters shall be fitted to the door of the incoming isolator. Both meters shall be operated through phase selector switches.

Enclosure

Enclosures shall be of the floor mounting, free standing, flush- fronted, cubicle type.

The enclosure shall comply with a minimum degree of protection, IP54 and be suitably designed to exclude vermin.

Enclosures shall be constructed from mild steel plate (unless conditions/environments dictate otherwise) with a minimum thickness of 2mm (14 SWG).

All metalwork to be degreased, rust-proofed and stoved to match all other control panels.
Access to the enclosure interior is to be via hinged front opening doors.

All gland plates to be provided.

Components and Wiring

Components mounted on baseplates must be removable from the front of the compartments. Baseplates also must be removable.

The minimum flexible wire inside the compartment shall be 1.5mm^2.

All wires to be numbered at both terminal and contactor/relay/ fuse, etc. ends.

Ring type of markers only shall be used.

All conductors shall be identified by colours as follows:-

Earth Conductors	-	Green/Yellow	
Power Circuits	-	400 Volt	
		Phase:	Brown / Black / Grey
		Neutral:	Blue
AC and DC Control Circuits	-	as IEE wiring regulations	

9.4 Motor Control Compartments

Each starter to include:-

* Triple pole fuse switch with auxiliary contacts and provision for padlocking "Off".

* Triple pole contactors with auxiliary contacts.

* Thermal overload unit with "single phase" protection - internally reset.

* Control circuit fuses.

* Terminals to be SAK 4 minimum size manufactured from polyamide material.

Please note that selection switch manual/automatic to be via a HMI (Human Machine Interface).

Start and stop push buttons to be via a HMI (Human Machine Interface).

Where there are no external/remote requirements, the control voltage to be 230V.

Where remote pieces of equipment are used such as external push button stations/limit switches, etc., then the control voltage must be 110V AC or less, obtainable from a double wound safety isolating transformer with an earthed screen. The control transformer to be used shall be fused on both sides of the primary and the switched side of the secondary with a removable link fitted into the common line.

Earthing

A main earth bar shall be provided fitted along the whole length of the MCC.

This bar shall be of adequate cross-sectional area and manufactured from hard or medium hard drawn high conductivity copper.

The completed MCC shall be efficiently bonded together and to the main earth bar.

Each door shall have a flexible earth braid to main metal framework to provide earth continuity between housing and door.

Identification

Each compartment door shall carry an engraved identification label.

The MCC manufacturers label shall contain the following information:-

(a) Name or trademark, type, designation, serial number, date of manufacture

(b) Type of protection of enclosure

(c) The electrical system characteristics - maximum load, rates supply/control voltage, etc

(d) Rated currents of the busbar system

(e) Short circuit rating

The manufacturer shall provide certificates of tests complied with in accordance with the relevant British Standard (BS.EN 60439-1&2).

9.5 Controls Section

General

The system shall allow full control and supervision of all operation plant parameters.

The control system shall:-

- Monitor and control the engine via an engine management system.
- Monitor and control the generator voltage, frequency and phase.
- Activate automatic synchronisation following operator initiation.
- Activate alarms, shutdown plant and warn remotely stationed plant supervisors.

It is highlighted that automatic synchronisation followed by normal parallel running with the grid is required.

Engine Management System

The engine management system shall comprise of an encased dedicated electronic control system. Signals shall be transmitted from sensors located on the engine and compared with programmed control parameters to maintain performance.

Any abnormal parameters shall initiate an alarm which shall be transmitted to the main Controller. If necessary the engine shall be shutdown in a controlled manner.

All monitored signals shall be retransmitted into the Controller for onward transmission and display on the monitoring system.

Generator Control

Generator parameters shall be monitored and controlled to enable synchronisation and parallel operation with the grid. Protection relays shall prevent electrical faults causing damage to the system by opening the generator circuit breaker.

Voltage Regulator

Voltage regulation shall be solid state with the engine governing within the limits specified in BS 150 3046-1, Class A1, and satisfy the Grade 2 requirements specified hereunder.

GRADE 2

a. At any balanced load between zero and rated load and at any load power factor from 0.8 lagging to unity and at any normal service condition temperature, the output voltage is to lie between the limits of plus or minus 2.5% of rated value.

b. On suddenly increasing the load from zero to 60% rated value the initial voltage dip is not to exceed 15% of rated value and recover to at least 97% of rated value within 0.5 seconds.

Voltage Wave Forms

A sine wave shape voltage waveform within the permitted limits of BS 4999 Part 140 and BS 5000 Part 3 shall be maintained.

Frequency Control

The output frequency from the generator shall be monitored and maintained within +/- 0.5% of 50Hz.

Automatic Synchronising

An automatic synchroniser shall be installed to adjust the generator frequency. When the generator frequency matches the grid frequency and both are in phase the CHP set shall be connected to the grid. A signal shall be transmitted from the generator controls to close the CHP set circuit breaker.

Automatic synchronising shall be achieved through the electronic engine governor. The generator AVR shall match generator voltage with grid voltage during automatic synchronising.

Controllers

General

The control/monitoring of the plant and CHP shall be by industry standard Controllers with an open protocol. Each shall have separate battery supported UPS.

A common manufacturer shall be utilised throughout the project.

Tenderers must state clearly the make and type of controllers proposed, detailing the input and output units, i.e. electrical characteristics and function, etc. and where appropriate the optional facilities programmed into the Controller.

(a) Enclosure

Each MCC shall incorporate a controller(s) in a separate cubicle. A separate controller, within a panel shall be provided as an interface between the BMS and the individual CHP units.

(b) Electrical Supply

A 230V dedicated supply shall be used for mains operation. A label shall be provided as the point of supply to warn personnel that a controller is fed from this circuit.

A separate transformer within each panel shall be used to supply:-

(i) The central processor, power supply unit, programme panel and peripheral equipment outlets.

(ii) The input and output circuits.

Transformer (i) shall be of the constant voltage type and shall be fed from the live side of the mains supply via an internally mounted, fully shrouded main incoming isolator.

Transformer (ii) shall be fed from the "dead" side of the main incoming isolator via its own I/O isolator. This allows separate isolation of the I/O circuits whilst still retaining power to the central processor.

A twin RCCD 30mA protected 240V 3 pin socket outlet shall be supplied and mounted adjacent to the main central processor.

(c) Mains Isolation

Mains isolation shall be provided. The isolator shall provide isolation for all circuits with the exception of the internal lamp and heater and a warning notice shall be displayed to warn that these circuits remain alive even when the main isolator is open. A notice shall also be displayed to state where the supply is taken from. The isolator must be mounted inside the panel to ensure that it can only be operated with the door open.

(d) Power Supplies

DC output modules shall be operated on a 24V dc system. The dc voltage must be derived from within the control panel by means of a stabilised and smoothed dc power supply with constant current capabilities.

Special attention must be given to the rating of the power supply to ensure that the input/output loadings, together with a 25% spare capacity, can be supplied by the power supply.

(e) Surge Protection Device

A surge protection device shall be installed on the power supply to the control panel.

The surge protection device shall be configured to protect the PLC and power supply against overvoltage resulting from a lightning strike and/or mains switching.

The device shall be capable of reducing an 11,000 volt transient down to a value less than 400 volts.

(f) Micro Processor Based Controllers

The controls shall fail safe. All safety interlocks critical to plant operation shall be augmented by hard wired equipment independent of the controller. Upon failure of the controller or power supply safety interlocks shall safely shutdown the plant and raise alarms.

The controller shall have the following minimum features:-

(i) Modular construction for ease of expansion

(ii) Software from an industry standard manufacturer

(iii) EEPROM or battery back-up of software

(iv) Programming via an IBM compatible computer

(g) I/O System

Remote input/output devices shall only be used to reduce the complexity of the electrical installation on large systems.

I/O control circuits shall be protected with a cartridge fuse in the line conductor and a link in the neutral. Whenever an I/O control supply is taken from the Controller enclosure it shall be individually fused. Fused terminals shall be utilised. Discrimination shall ensure that the terminal fuse is first to blow in the event of a fault.

(h) System Capacity

The tenderer shall ensure that there is spare capacity or space to expand the number of inputs, outputs, terminals and programme lines by not less than 10% on each PLC. All spare inputs and outputs shall be wired to terminals.

(i) *Operator Interface*

The operator interface shall comprise of an industrial standard colour graphics display. Multiple screens for plant functions shall be selectable via membrane function keys.

Each display screen shall provide time information on all engine, generator, and auxiliary systems. Trend and historical information shall be recorded for a maximum of 8000 hours operation. Downloading facilities onto an external data storage medium shall be included.

Any alarms shall be recorded, with identification and type. Historical alarms shall be held in memory and up to a maximum of 300 no. alarms shall be retained.

(j) *Instrumentation*

Instrumentation shall be provided on the control panel for each CHP set. On each set this shall be provided via a Human/Machine Interface, as follows:

Double volt meter and phase selector switch indicating:-

(i) Grid voltage.
(ii) CHP generator voltage.

Double frequency meter indicating:-

(i) Grid frequency.
(ii) CHP generator frequency.

Synchroscope.

Ammeter phase selector switch.

KWH meter.

Engine tachometer.

Power factor meter and phase selector switch.

(k) Controls

The following operators shall be provided on the control panel for each CHP set.

(i) Engine start push button.

(ii) Engine stop push button.

(iii) Initiate automatic synchronisation push button.

(iv) Alarm mute push button.

(l) Indicating Lamps

The following indicating devices shall be provided on the control panel for each CHP set:-

(i) Alarm lamp.

(ii) Alarm sounder.

(iii) Automatic synchronisation initiated.

(iv) Generator synchronised.

(m) *External Control Systems*

Items of plant external to the CHP set shall effect operation of the CHP set. The signals will comprise of single pole volt free contacts.

Signals shall be:-

(i) Gas safety valve closed.

This shall shut down the engine and isolate the CHP set.

(ii) Remote emergency stop.

This shall shut down the engine and isolate the CHP set.

(iv) Readiness signal for synchronisation with the grid.

9.6 Battery Panel

A regulated DC power supply shall be provided to operate controls for the CHP set. A battery shall maintain the DC voltage during transient interruptions to the incoming power supply.

D.C power supply, batteries and battery charger shall be housed in a separate ventilated cubicle. The cubicle shall be installed with other CHP set control panels and shall be similarly constructed providing a uniform suite of panels.

The battery shall comprise of nickel cadmium cells in ventilated plastic containers, all interconnected. Battery charge shall be maintained through a float charger operated to maximise battery life and minimise maintenance. The battery panel shall be provided with an ammeter and voltmeter to monitor the battery output. A `power on' lamp shall indicate that the battery panel is live.

Wiring between the battery panel and control circuits shall be adequately sized. Maximum resistance limits of cable to permit normal operation of solenoids, relays, contactors etc shall not be exceeded.

9.7 Common Controls Section

A common control panel shall be provided as an interface between the BMS, ENMS and the CHP unit and therefore to select control regimes for the CHP set. Also the panel shall provide overall supervising control of the CHP set and switchgear signals.

The common controls section shall have the following control switches:

(a) Normal Operation/Back Synchronisation (selector switch spring return) to select the system from normal operation to provide control over the G59 circuit breaker. CHP sets will automatically synchronise with the grid. When the site voltage, frequency and phase match the grid the G59.2 circuit breaker will be automatically closed.

(b) Double volt meter via Human/machine interface and phase selector switch indicating

(i) Grid voltage

(ii) Site voltage (CHP set)

(c) Double frequency meter (via Human/machine interface) indicating:-

(i) Grid frequency

(ii) Site frequency (CHP set)

(d) Synchroscope

(e) An automatic circuit breaker will be provided by others under a separate contract. Sensors and signals are included on the circuit breakers as detailed below:-

1. Circuit voltage transformer
2. Busbar voltage transformer
3. Circuit current transformer
4. Busbar current transformer
5. Circuit breaker open - volt free contact (vfc).
6. Circuit breaker closed - vfc.
7. Circuit breaker opened on fault - vfc.
8. Circuit breaker opened manually - vfc.

(f) The common controls section of the CHP panel shall perform synchronisation between the site and the grid. To achieve synchronisation control of the main circuit breaker linking site and grid is required. When the site voltage, phase, and frequency are equal the circuit breaker can be closed.

The common control panel section shall contain `volt free' contacts wired to a terminal strip as listed below:-

Each volt free contact set shall comprise of 230 volt, 5 amp rated changeover contacts with all poles cabled to terminals.

(i) Close circuit breaker.
(ii) Open circuit breaker.

10.0 TESTING, COMMISSIONING AND HANDOVER

10.1 Testing and Commissioning

Project Co. shall be responsible for the complete testing and commissioning of the CHP plant, equipment and installations to prove safe and reliable operation, compliance with statutory requirements and compliance with stated plant performance criteria, including the good quality CHP index.

The testing and commissioning shall include off site testing of individual major plant items, e.g. engine or generator skid units, which shall, at the discretion of the Client, be witnessed by the Client or his representatives. *The test should include a start-up from cold conditions, a period of running (including basic response to controls), and a shutdown of the equipment. During the running period, measurement of fuel input and power output may be carried out.*

Project Co. shall include within the tender for the full commissioning of the complete CHP plant installations and all associated costs including all travelling, engineers' time, service parts, lubricants, coolants etc.

Commissioning of the CHP Plant shall also prove compliance with this specification in terms of equipment performance and with the manufacturers stated performance criteria.

All plant control and Instrumentation shall be subjected to comprehensive proof testing. Tests shall be conducted to ensure that each auxillary plant control and Instrumentation package provides the correct signal outputs to, and correctly responds to commands from, other auxillary plant packages, and the integrated Energy Centre System/Building Management System.

Project Co. shall conduct works and site testing to the point where they are able to provide documentary evidence that each system, including those associated with services provided by others, together with the interfaces between them, function correctly before the equipment is set to work.

Initial site testing shall be carried out once all the equipment has been assembled into a functioning CHP plant and the electrical and heat connections have been made. These tests shall demonstrate that individual plant items, and the entire CHP plant, are able to perform satisfactorily under the appropriate range of conditions.

Project Co. shall make allowance for seasonal commissioning by the CHP supplier when they shall be required to fine tune and prove the controls and integration of the system. This shall be carried in the winter, summer and mid-season after handover.

Project Co. shall allow the Client, with reasonable notice to witness all testing, both at works and on site.

10.2 Fuel for Commissioning

Project Co. shall indicate the expected fuel consumption in the tender.

10.3 Reliability and Performance Running

Following the satisfactory completion of site testing and commissioning and the provision of commissioning results, information and instruction of the Purchaser's staff, the complete CHP plant installation shall be continuously operated for a period of 14 days, during which time it shall have trouble and fault free operation before it is considered to be practically complete. The unit shall be deemed to be acceptable when it can be run for three consecutive 8 hour continuous shifts with an operating time of over 95% of the 24 hours, i.e. max 1.2 hours down time in all.

Performance testing shall be carried out in conjunction with the above reliability running, and is intended to demonstrate that the CHP plant achieves the guaranteed performance levels. The parameters covered shall be:

- Electrical and heat outputs.
- Fuel consumption.
- Electrical consumption by plant auxiliaries.
- Noise.
- Exhaust emissions.

The performance testing shall demonstrate that the plant meets the specified performance parameters over a period of three days.

Should the plant fail these performance tests, the Board will be required to make good the plant deficiencies and repeat the tests. The defects shall be rectified and the plant retested to meet the specified performance.

10.4 Plant Instruction

Project Co. shall include within the tender for the post commissioning instruction of the Client's staff/representatives. The plant instruction shall as a minimum, enable the Purchaser's staff to:-

(a) Satisfactorily carry out the Purchaser's plant housekeeping role as defined in the contract maintenance agreement.

(b) Overview the safety of the plant operation and respond (if present) to any emergency situations.

(c) The plant instruction shall be carried out over a minimum of 2 sessions and the training shall include a review of the final operating & maintenance instructions.

10.5 On-Site Static Pre-Commissioning Checks

Static pre-commissioning checks shall take place only after the installation of all services, connections and ancillary items are complete. This may require completion of works by others.

The static pre-commissioning checks shall be witnessed by the Purchaser or his nominated representative.

The plant pre-commissioning shall include, but not be limited to confirmation that the following are complete and can be put into service:-

(a) Fuel systems are complete, commissioned in accordance with statutory requirements and are ready for use.

(b) Exhaust systems are complete throughout and are gas tight.

(c) Medium voltage cabling to site has been tested and terminated at both ends.

(d) Satisfactory test certificates and results shall be available for medium voltage systems. This shall include proof that all medium voltage cables have undergone a successful pressure test.

(e) All low voltage cabling shall be tested for continuity, insulation resistance, and correct termination.

(f) Noise and set vibration levels shall be measured and recorded.

(g) All control and signal cabling shall be tested for continuity and insulation resistance. shall confirm that all cable cores are located in the correct terminals. Cable types shall be cross checked against the manufacturers schedule to ensure that the correct types are installed.

(h) Project Co. shall liaise with other Boards to confirm that all protection relays on the main site circuit breakers are fully functional.

(i) Dump radiator systems, pumps, pipework, etc are fully complete, tested, flushed out and filled with correct coolant and are ready to put into service.

(j) Lubrication systems are complete, tested and ready to put into service.

(k) All pumps, fans etc have been checked for correct rotation and are ready to put into service.

Static pre-commissioning checks must be satisfactorily completed and witnessed before dynamic commissioning can commence.

10.6 On-Site Dynamic Commissioning & Setting to Work

Dynamic commissioning and setting to work of the plant shall only take place following satisfactory completion of pre-commissioning checks on the complete CHP installation.

The dynamic testing, commissioning and setting to work of the plant shall be witnessed by the Client or his nominated representative and shall be satisfactorily completed, prior to reliability running of the plant.

The dynamic testing and commissioning shall prove the safe, reliable performance of the plant, compliance with stated performance criteria and guaranteed values and shall include, but not be limited to the following:-

(a) The engines shall be cranked and ignition system checked.

(b) The engine management systems shall be modulated and monitored to confirm engine speed control is stable.

(c) All safety and operational interlocks shall be tripped in turn to confirm control actions over engines.

(d) The engines shall be run for an extended period followed by checks to confirm no oil, water or cooling fluid leaks from the installations.

(e) Operation, interlocks and rotation of all motors shall be confirmed.

(f) The generator voltages and frequencies shall be measured and recorded.

(g) Operation of all plant items including dump radiators and cooling circuits shall be checked for satisfactory performance.

(h) The process of automatic synchronisation shall be checked prior to initiation of full synchronisation procedure.

(i) Project Co. shall arrange and co-ordinate testing of protection relays with the Purchaser and the REC. Tests shall confirm the generators protection complies with the requirements of the Electricity Supply Regulations (1988), the requirements of Engineering Recommendation G59/2, G53, G75 and P28 and Engineering Technical Report 113. Following approval from the REC Project Co. shall synchronise the CHP generator with the Grid.

10.7 Efficiency Testing

Efficiency testing of the CHP plant installation shall be carried out after all dynamic testing, commissioning and adjustment of the plant has been satisfactorily completed.

The efficiency tests shall be witnessed by the Client or his nominated representative and shall prove compliance with the stated plant performance criteria and guaranteed values.

Project Co. shall include for the provision of all materials, test equipment and skilled operatives to carry out the tests, which shall include but not be limited to:-

(a) Generator electrical output

(b) Generator and plant electrical parasitic losses, including all ancillaries at full load operation.

(c) Fuel consumption of the engine

(d) Thermal output/hot water production of exhaust gas, oil, water and other heat exchangers.

10.8 Maintenance

The manufacturer shall include for all required maintenance tasks throughout the period between installation and handover of the system to the Client. For dates and time periods reference should be made to the construction programme.

Specification Check / Revision Sheet

Project	**RHSC and DCN Edinburgh Hospitals**	Project Number	**G1547**
Service (s)	**Mechanical**	Sheet	**WW AP.1.2.11 SMcK G1547**
Performance Specification Title	**Above Ground Foul Drainage System**	Date	**August 2014**
Prepared By	**DW**	Checked By	**SMcK**

Revision Ref.	Date of Revision	Page N$^{o(s).}$	Revision Details	Checked By
FT	December 2013	All	Final Tender	SMcK
FC	July 2014	All	Update for Financial Close	SMcK
FC	August 2014	All	Comments Incorporated	SMcK

RHSC and DCN EDINBURGH
ABOVE GROUND FOUL DRAINAGE SYSTEM

CONTENTS

1.0 GENERAL INTRODUCTION

2.0 SCOPE

3.0 SPECIFIC EXCLUSIONS

4.0 INTERFACES AND DEMARCATIONS

5.0 APPLICABLE STANDARDS

6.0 DESIGN CRITERIA

7.0 LIAISON

8.0 SYSTEM DESCRIPTION

MATERIALS AND WORKMANSHIP CLAUSES

R11 ABOVE GROUND FOUL DRAINAGE SYSTEMS

1.0 GENERAL INTRODUCTION

Purpose of Document

The development of the design, manufacture, supply, installation, wiring, setting to work and commissioning of the works described in this document shall be undertaken by Project Co.,

To carry out the development of the design, Project Co. shall obtain the necessary supporting documentation.

This specification relates to the Above Ground Foul Drainage Systems serving the RHSC-DCN Building and the adjacent Energy Centre.

This specification shall be read in conjunction with all other mechanical and electrical engineering services specifications and the Architectural drawings.

Description of Project

The new facility shall re-provide services from the Royal Hospital for Sick Children, Child and Adolescent Mental Health Service and the Department of Clinical Neurosciences in a single building adjoining the Royal Infirmary of Edinburgh at Little France.

The DCN part of the Facilities will have a physical link with the existing RIE Facilities specifically with the critical care unit.

The building is generally constructed from reinforced concrete.

The basement houses FM support facilities and the main building services heat distribution centres and electrical plant rooms.

Ventilation plantrooms are generally located at roof level and level 3,

A central Energy Centre shall be provided to the South of the hospital housing heating, CHP, standby generation, fuel storage and utility incomers.

2.0 SCOPE

The scope of work covered by this Specification shall include, but not be limited to, the following:-

- Above ground sanitation installation

3.0 SPECIFIC EXCLUSIONS

The following is specifically excluded from the scope of this Specification:-

- Below Ground/Basement/Slab Drainage
- Drainage Sumps and Pumps
- Rainwater Drainage Systems
- Gullies in Ground and Basement Slab
- Sanitary Schedules

4.0 INTERFACES AND DEMARCATIONS

The above ground foul drainage system shall comprise of the pipework system from (& including) the joint to the appliance outlet of the sanitary fitment/appliance (specified by others), to (& including) the connection to the above ground foul drainage system and in-slab/in-ground drainage system. The above ground foul drainage system shall also incorporate all plantroom gullies with the exception of the gullies in the ground and basement slabs which shall be included in the below ground drainage package.

5.0 APPLICABLE STANDARDS

All elements of the works shall be in accordance with the requirements of current legislation, regulations and industry standards unless otherwise stated.

The above ground foul drainage installation shall accord with all appropriate Hospital Technical Memoranda, Codes of Practice and relevant British and European Standards and Building Regulations.

6.0 DESIGN CRITERIA

The above ground foul drainage system shall be based on a secondary ventilated system as described within BS EN 12056: Part 2. The system shall be based on the discharge unit method. Discharge unit values as listed under system III, table 2 shall be used with the following frequency factors:-

- Congested usage, for toilet areas, etc, as used by the public; k=1.0
- Frequent usage, for all other areas, etc, k=0.7
- Intermittent usage, for toilet areas within office areas, etc; k=0.5

The chemical above ground drainage system shall be based on a secondary ventilated system as described within BS EN 12056: Part 2. The system shall be based on the discharge unit method. Discharge unit values as listed under system III, table 2 shall be used with the following frequency factor:-

- Frequent usage, k=0.7

7.0 LIAISON

Project Co. shall include for liaison with:-

Health and Safety Professionals. As well as the Health and Safety requirements of Parts A, B and C of this specification, Project Co. shall include for close liaison with Health and Safety professionals including the Trust's Health and Safety Advisors and the CDM Co-ordinator and shall comply with the CDM Regulations and all Health and Safety regulations.

Specialist Installers. Project Co. shall liaise with other parties as necessary to ensure that all interfaces between the above ground sanitation pipework installation and other systems are allowed for.

Any other member of the Project and Board teams concerned with planning administration of the Above Ground Foul Drainage System.

8.0 SYSTEM DESCRIPTION

This Specification is intended to cover the works involved in the above ground sanitation, chemical drainage installations, and contaminated (radioactive) waste discharge.

Above Ground Foul Drainage System

Foul drainage shall be collected from the sanitary fittings, equipment and outlets, by a system of vertical and horizontal pipework distributed within the building, to connect to the in-slab/underground drainage system.

The system shall be configured to permit foul solid and liquid waste materials to pass uninterrupted from the point of collection, i.e. from the sanitary appliance/fitting etc, to a point of discharge at ground floor level. At this level the soil and waste above ground drainage system shall discharge to the below ground drainage system. Drainage from the basement area shall connect to drainage sumps/ pumps provided in the below ground drainage.

The above ground foul drainage system shall comprise of the pipework system from (& including) the joint to the appliance outlet of the sanitary fitment/appliance (specified by others), to (& including) the connection to the above ground foul drainage system and in-slab/in-ground drainage system. The above ground foul drainage system shall also incorporate all plantroom gullies excluding gullies in ground and basement level slab.

A ventilated soil and waste system shall be provided, i.e. main soil stacks and anti-syphon ventilation stacks.

The above ground foul drainage system 'ventilation and anti-syphon pipework' shall be uPVC. Fire collars shall be installed on uPVC pipework above 40mm diameter where passing through fire barriers and in accordance with Building Regulations.

Air admittance valves shall not be used.

Insulation (for acoustic purposes) to main vertical soil and waste stacks and horizontal soil and waste branches, within ceiling voids, shall be provided on all pipework that passes through sensitive areas of the building, e.g. consulting rooms, meeting rooms and other quiet or noise sensitive areas, etc. Acoustic insulation shall be Isol Acoustic Wrap by Geberit or equal and approved, and to suit the Acoustic Consultant's requirements and strategy.

Condensate drainage shall be connected to the foul drainage discharge stacks via a trapped tundish connection.

Drainage Sump Pumps

Separate drainage sump pumps shall be provided by the structural engineer in the basement to handle the discharges from the following areas:

Main tank room: Water overflow/ drain down from storage tanks.
Sprinkler tank room: Sprinkler test drain sump.
Basement kitchen and FM accommodation: Sanitary discharges.
Heat Stations: Hot water safety discharges and drain down.

All pump sets shall be in duplicate and sanitary pump sets shall be ventilated to the above ground foul drainage system.

All pumped discharges shall rise separately and connect to the external drainage system.

Above Ground Chemical Drainage System

A separate dedicated above ground gravity chemical drainage system shall be provided for this building. The above ground chemical drainage system shall not interconnect with the above ground foul drainage system or radioactive waste system at any point.

Chemical drainage shall be collected by a system of vertical and horizontal pipework distributed within the building, to connect to the in-slab/underground drainage system.

The system shall be configured to permit chemical liquid waste materials to pass uninterrupted from the point of collection, i.e. from the appliance/fitting etc, to a point of discharge at ground floor. At this level the chemical above ground drainage system shall discharge to the below ground drainage system.

A ventilated chemical above ground drainage system(s) shall be provided, i.e. main waste stacks and anti-siphon ventilation stacks.

The above ground chemical drainage system shall comprise of the pipework system from (and including) the joint to the appliance outlet of the sanitary fitment/appliance (specified and installed by others), to (and including) the connection to the above ground chemical drainage system and in-slab/in-ground drainage system.

The above ground chemical drainage system shall be all polypropylene or HDPE to best suit the discharge. Confirmation shall be obtained from the pipework manufacturer of the suitability of the pipework material with the discharges to drain.

Air admittance valves shall not be permitted within any part of the above ground chemical drainage system.

Insulation (for acoustic purposes, on non-metallic pipes) to main vertical chemical waste stacks and horizontal chemical waste branches, within ceiling voids, shall be provided on all pipework that passes through sensitive areas of the building, e.g. consulting rooms, meeting rooms and other quiet or noise sensitive areas, etc. Acoustic insulation shall be Isol Acoustic Wrap by Geberit or equal and approved and to suit the Acoustic Consultant's requirements and strategy.

Above Ground Radioactive Drainage System

A separate dedicated above ground gravity radioactive drainage system shall be provided for this building. The above ground radioactive drainage system shall not interconnect with the above ground foul drainage system or chemical waste system at any point.

Radioactive drainage shall be collected by a system of vertical and horizontal pipework distributed within the building, to connect to the in-slab/underground drainage system.

The system shall be configured to permit radioactive liquid waste materials to pass uninterrupted from the point of collection, i.e. from the appliance/fitting etc, to a point of discharge at ground floor. At this level the radioactive above ground drainage system shall discharge to the below ground drainage system.

A ventilated chemical above ground drainage system(s) shall be provided, i.e. main waste stacks and anti-siphon ventilation stacks.

The above ground chemical drainage system shall comprise of the pipework system from (and including) the joint to the appliance outlet of the sanitary fitment/appliance (specified and installed by others), to (and including) the connection to the above ground radioactive drainage system and in-slab/in-ground drainage system.

The above ground radioactive drainage system shall be all polypropylene or HDPE to best suit the discharge. Confirmation shall be obtained from the pipework manufacturer of the suitability of the pipework material with the discharges to drain.

Air admittance valves shall not be permitted within any part of the above ground chemical drainage system.

Insulation (for acoustic purposes, on non-metallic pipes) to main vertical radioactive waste stacks and horizontal chemical waste branches, within ceiling voids, shall be provided on all pipework that passes through sensitive areas of the building, e.g. consulting rooms, meeting rooms and other quiet or noise sensitive areas, etc. Acoustic insulation shall be Isol Acoustic Wrap by Geberit or equal and approved and to suit the Acoustic Consultant's requirements and strategy.

General design considerations

Head of drain vent(s) shall be provided. This head of drain vent(s) shall connect from the in-slab/underground drainage system and pass up through the building to terminate to atmosphere at roof level or via a public health plenum at plantroom level.

All soil and waste pipework located within ceiling voids shall be a minimum diameter of 50 mm.

Pipework for gravity condensate drains shall be a minimum of 20mm diameter.

Access points shall be provided on all discharge stacks on each floor level above flood level of adjacent appliances.

Rodding access points shall be provided above the flood level of the appliance being served.

Rodding access shall be provided on all ground floor and basement connections to the below slab drainage.

Soil branch pipework at low level shall be in uPVC with fire collars where passing through fire barriers.

Waste branch pipework shall be in MUPVC. HDPE for chemical and radioactive.

Stub stacks shall be provided with rodding access located above the flood level of the appliance being served.

Individual stub stacks shall be in uPVC.

The in-slab basement and ground floor drainage shall be by the below slab drainage engineer including all sumps and pumps.

The detail of all pipework passing through the basement retaining walls shall be by the structural engineer.

Material and Workmanship Clauses

R11 Above ground foul drainage systems

ABOVE GROUND FOUL DRAINAGE SYSTEMS

GENERAL

The sanitation pipework system shall comply with Scottish Building Regulations and BS EN 12056:2.

The above ground foul drainage will be collected from sanitary fittings, equipment and outlets, by a system of vertical and horizontal pipework distributed within the building, to connect to the below ground drainage system. It will be a gravity discharge ventilated soil and waste system, i.e. main soil stacks and anti-siphon ventilation stacks. Pipework will generally be concealed within modular sanitary panels and ceiling voids. Rodding access for pipework will be provided at the floor being served and not within the ceiling void. Pipes passing through non fire rated walls shall be fitted with pipe sleeves of the same material as the pipe and of such a diameter to allow a minimum clearance for the free movement of the pipe.

When pipes are passing through a fire wall the sleeves shall comply with fire regulation and the requirement of the fire officer and building control. Soil and waste connections on the ground floor will connect directly into the below ground drainage via stub stacks with vent pipes to upper floors where required. The upper floors will have a system of soil and waste stacks and vent pipework.

Project Co. shall include for liaison with:-

- Health and Safety Professionals
- The Board.
- Other Specialist Installers.
- The Trust.
- The Architect

Project Co. shall confirm that the holes indicated on the structural engineer's drawings are incorporated on their installation drawings.

Provision for access to the full bore soil/waste and laboratory (chemical) stack access door points, thorough the wall structure, e.g. plasterboard or similar, shall be provided. The size of these access hatches shall be 300 mm x 300 mm in size, positioned centrally to the soil/waste stack, and laboratory (chemical) drainage access door. The setting out of these above ground soil/waste, and laboratory (chemical) drainage, access hatches is the responsibility of the Architect.

The in-slab/underground drainage system, including all drain connection points, shall be the responsibility of the Structural/Below Ground Drainage Engineer.

115 ABOVE GROUND FOUL DRAINAGE SYSTEM

- Sanitary and floor drainage outlets:

An above ground gravity foul drainage system shall be provided for this building with an exception of the basement which shall be pumped.

The system shall be designed to maintain the highest standards of public and environmental health.

The above ground foul drainage system shall comprise of the pipework system from (& including) the joint to the appliance outlet of the sanitary fitment/appliance (specified by others), to (& including) the connection to the above ground foul drainage system and in-slab/in-ground drainage system. The above ground foul drainage system shall also incorporate all plantroom gullies above basement and ground floor levels.

The Board shall be responsible for availing himself of the details of the sanitary fitments/appliances and the installed in-slab/in-ground drainage system, and provide appropriate adaptors/connectors to connect to same.

Nuclear medicine, endoscope washers and chemical sinks shall all have polypropylene waste pipes. Chemical and radioactive drainage shall have separate stacks from general domestic soil and waste water drainage in the above ground drainage system and will discharge into the below ground drainage. Chemical and radioactive discharges will not be retained in any form of storage.

Access points (full bore) for cleaning will be provided on all discharge stacks.

They typically will be at 1200 mm above finished floor level on each floor and will be aligned with the architectural access provision.

Soil and vent pipes shall commonly terminate to atmosphere at 300mm above finished roof level with a domical cage terminal and 1m above and 3m away from any building opening.

Rodding access points shall be provided above the flood level of the appliance being served.

Access on ground floor stub stacks will be by means of top-mounted, full bore, cleaning eyes. A ventilated soil and waste system shall be provided, i.e. main soil stacks and anti-syphon ventilation stacks.

Changes in direction of all soil and waste pipework shall be carried out using 2 No. 45 degree fittings. Air admittance valves shall not be used.

Stub stacks shall be provided with rodding access located above the flood level of the appliance being served.

- Waste pipework: To suit system type.
- Discharge stack and branch pipework: To suit system type.
- Separate ventilating pipework: To suit system type.
- Accessories: See drawings for details.
- Disposal: To below ground drainage.

SYSTEM PERFORMANCE

As part of the development of the co-ordinated working drawings Project Co. shall prepare general arrangement drawings of the above ground sanitation and internal rainwater pipework installations based on the Architect's base drawings and coordinated with other services and building elements. A proposed drawing list shall be submitted with the tender. Insulation (for acoustic purposes) to main vertical soil and waste stacks and horizontal soil and waste branches, within ceiling voids, shall be provided on all pipework that passes through sensitive areas of the building, e.g. consulting rooms, meeting rooms and other quiet or noise sensitive areas, and to suit the Acoustic Consultant's requirements and strategy.

Where exposed to view waste pipework and traps shall be white. Traps used on small bore sanitary appliances, e.g. sinks, wash hand basins, etc, shall be provided with a 75mm deep seal trap. Where chemical or radioactive wastes are installed, Identification labels shall be applied at a maximum of 3m intervals identifying the service- _Chemical Drainage or Radioactive Drainage, along with appropriate hazchem labels.

220 COLLECTION AND DISTRIBUTION OF FOUL WATER

- General: Quick, quiet and complete, self-cleansing in normal use, without blockage, crossflow, backfall, leakage, odours, noise nuisance or risk to health.
- Pressure fluctuations in pipework (maximum): ±38 mm water gauge.
- Water seal retained in traps (minimum): 25 mm.

310 FLOOR CHANNELS Install floor channels as indicated on drawings

- Manufacturer: Blucher
  - Product reference: As drawings
- Floor finish: As Architects schedules.
- Body type As schedule.
  - Material: Stainless steel.
- Sizes: As drawings
- Type of fall: Built in fall.
- Grating/ cover:
  - Loading: Heavy wheeled traffic.
  - Material: Stainless steel, screw fixed.
- Accessories: As drawings

315 FLOOR DRAINS Install floor drains as indicated on drawings

- Manufacturer: Saint Gobain
  - Product reference: As drawings
- Floor finish: As Architects schedule.
- Body type: P-trapped.
  - Material: Nickel bronze, satin finish.
- Grating/ cover:
  - Type: Flat.
  - Material: Antislip mesh.
- Outlet: Type and direction to suit pipework
- Accessories: As drawings

340 COPPER PIPEWORK Copper pipework shall be used for very hot liquid outlets and as detailed on drawings. Where uPVC pipework runs through noise sensitive areas the pipe shall be enclosed to reduce noise nuisance.

- Standard: To BS EN 1057, Kitemark certified.
  - Temper: Half hard R250.
  - Nominal wall thickness: 1.2 mm.
- Nominal outside diameters: As detailed on drawings.
- Brackets: Brass clips.
  - Fixings: To suit location.

  Size: to suit pipework.
- Accessories: Rodding eyes as per specification and drawings.

345A HDPE PIPEWORK For chemical and radioactive waste from laboratories, both hot and cold.

- Standard: To BS EN 1519-1.
- Manufacturer: Submit proposals.
  - Product reference: Submit proposals.
- Sizes: As drawings.
- Brackets: Pipe supports and support distances shall be as manufactures recommendations.
  - Fixings: Pipe supports and support distances shall be as manufactures recommendations.

  Size: Pipe supports and support distances shall be as manufactures recommendations.
- Accessories: As drawings.

355 POLYPROPYLENE PIPEWORK

All components shall have been designed and manufactured specifically for the safe conveyance and containment of laboratory and chemical waste, both hot and cold.

Pipes and fittings shall be manufactured in an environment compliant with and certified in accordance with BS EN ISO 9001:2008 and/or NSF-61.

Pipes and fittings shall meet the performance requirements as detailed within ASTM-F1412, the international standard specification for polyolefin pipes and fittings for corrosive waste applications.

Pipes and fittings shall be capable of safely conveying and containing chemical and corrosive waste drainage under continuous working conditions operating at temperatures from minus 20ºC to +110ºC and at temperatures up to +130ºC for intermittent use. Pipes and fittings shall be tested and meet the mechanical and chemical resistance requirements of ASTM-F1412. The system shall be suitable for use within domestic, commercial and public buildings in accordance with the requirements of BS EN 12056-2:2000 for the conveyance and discharge of chemical waste, domestic drainage and sewage as is permitted by current legislation and Water Industry Acts. The system shall have been tested in accordance with the current BS EN standards as accepted within the UK and Europe.

Pipes and fittings to be manufactured from heat stabilised co-polymer polypropylene. Pipes shall be clearly marked Chemical Pipe and include manufacturers trade name designated size and production reference number for traceability. Pipe shall have a ring stiffness of >8kNm2 and meet the mechanical requirements of EN1451 (plastic piping systems for soil and water discharge, low and high temperature, within the building structure).

Fittings to be manufactured from heat stabilised co-polymer polypropylene, using virgin material. Fittings shall be clearly marked with the manufacturers name and designated size. Fittings shall be capable of being jointed by fusion welding. Pipes and fittings shall meet the chemical resistance requirements of ASTM-D4101.

Pipes and fittings to be manufactured from flame retardant heat stabilised co-polymer polypropylene, and shall meet the requirements for ASTM-4101 of PP0210 B55042 giving a UL-94 V-2 rating.

Pipes and fittings shall be fusion jointed. The electrofusion joint shall be made using an electrofusion welder. Permanent electrofusion shall be installed for inaccessible and high risk areas.

The pipework system shall have Metric to Inch size transition fittings available.

The installation shall be carried out to the manufacture recommendations

The installation Board shall provide technical documentation relating to the same and shall have received training with regards to the correct installation procedure.

The completed system should be tested for leaks in accordance with BS EN 12056-2:2000.

The Board shall give due allowance for expansion/contraction in the installation of the drain system.

- Standard:
  - To BS EN 12056-Part 2 and Kitemark certified; or
  - To BS EN 1451-1 and Kitemark certified.

  Application area code: B.
  Opening dimensions of access fittings, design of swept fittings, stand off dimensions of pipe and fitting brackets and requirements for adaptors and plugs: To BS EN 1329-1
- Manufacturer: Submit proposals.
  - Product reference: Submit proposals.
- Nominal sizes: As drawings.
- Colour: The pipework should be of a colour to alarm the fact that it is chemical waste.
- Brackets: Pipe supports and support distances shall be as manufactures recommendations.
  - Fixings: Pipe supports and support distances shall be as manufactures recommendations.

  Size: Pipe supports and support distances shall be as manufactures recommendations.
- Accessories: As drawings.

365 PVC-U PIPEWORK Jointing is by solvent welding. Where uPVC pipework runs through noise sensitive areas the pipe shall be enclosed to reduce noise nuisance.

- Standard: To BS EN 1329-1, Kitemark certified.
  - Weather resistance, connectors to WC pans, opening dimensions of access fittings, design of swept fittings, stand off dimensions of pipe and fitting brackets and requirements for adaptors and plugs: To BS 4514.

- Manufacturer: Board's choice.
  - Product reference: Board's choice.
- Nominal size: As drawing.
- Colour: Manufactures standard.
- Brackets: Manufactures standard.
  - Fixings: Manufactures standard.

  Size: Manufactures standard.
- Accessories: As drawings.

380 GREASE TRAPS AND CONVERTERS (BY KITCHEN INSTALLER)

383 INSULATION TO INTERNAL PIPELINE

- Manufacturer: Submit proposals.
  - Product reference: Submit proposals.
- Material: As acoustic consultant.
- Thermal conductivity (maximum): As acoustic consultant.
- Thickness: As acoustic consultant.
- Fire performance: Class 1 spread of flame when tested to BS 476-7 or Class CL to BS EN 13501-1.

390 RODDING EYES Rodding access points shall be provided above the flood level of the appliance being served and to BS EN 12056.

- Manufacturer: As pipework.
  - Product reference: As pipework.
- Body material: As pipework.
- Cover type: As manufactures standard.
- Cover material: As pipework.

400 PAINT FOR CUT ENDS OF CAST IRON PIPES

- Manufacturer: As BS EN 12056.
  - Product reference: As BS EN 12056.

EXECUTION

- All above ground and drainage systems shall be tested the satisfaction of the Local Authority as determined by the Building inspector.
- Prior to concealment by suspended ceilings, duct covers, partition cladding etc
- On completion of the whole installation
- On completion of all work, including that of trades

601 INSTALLATION GENERALLY

- Standard: To BS EN 12056-5.
- Components: From the same manufacturer for each type of pipework.
- Electrolytic corrosion: Avoid contact between dissimilar metals where corrosion may occur.
- Plastics and galvanized steel pipes: Do not bend.
- Allowance for thermal and building movement: Provide and maintain clearance as fixing and jointing proceeds.
- Concealed or inaccessible surfaces: Decorate before starting work specified in this section.

- Protection:
  - Purpose made temporary caps: Fit to prevent ingress of debris.
  - Access covers, cleaning eyes and blanking plates: Fit as the work proceeds.

605 PIPE ROUTES

- General: The shortest practical, with as few bends as possible.
  - Bends in wet portion of soil stacks: Not permitted.
  - Routes not shown on drawings: Submit proposals before commencing work.

610 FIXING PIPEWORK

- Pipework: Fix securely plumb and/ or true to line. Fix discharge stack pipes at or close below socket collar or coupling.
- Branches and low gradient sections: Fix with uniform and adequate falls to drain efficiently.
- Externally socketed pipes and fittings: Fix with sockets facing upstream.
- Additional supports: Provide as necessary to support junctions and changes in direction.
- Vertical pipes: Provide a load bearing support not less than every storey level. Tighten fixings as work proceeds so that every storey is self supporting.
- Wall and floor penetrations: Isolate pipework from structure, e.g. with pipe sleeves.
  - Masking plates: Fix at penetrations if visible in the finished work.
- Expansion joint sockets: Fix rigidly to the building.
- Fixings: Allow the pipe to slide.

625 JOINTING FLOOR CHANNELS

- Jointing: Silicone sealant.

630 JOINTING PIPEWORK - GENERALLY

- General: Joint with materials, fittings and techniques that will make effective and durable connections.
- Jointing differing pipework systems: With adaptors intended for the purpose.
- Cut ends of pipes: Clean and square. Remove burrs and swarf. Chamfer pipe ends before inserting into ring seal sockets.
- Jointing or mating surfaces: Clean and, where necessary, lubricate immediately before assembly.
- Junctions: Form with fittings intended for the purpose.
- Jointing material: Do not allow it to project into bore of pipes and fittings.
- Surplus flux, solvent jointing materials and cement: Remove from joints.

650 JOINTING PIPEWORK - COPPER

- Jointing: Integral lead free solder ring capillary fittings:
  - Standard: To BS EN 1254-1, Kitemark certified.
- Connections to appliances and equipment:
  - Compression fittings: To BS EN 1254-2, Kitemark certified.
  - Fittings with threaded ends: To BS EN 1254-4, Kitemark certified.

655 JOINTING PIPEWORK - HDPE AND POLYPROPYLENE

- Jointing: To suite application/Manufactures recommendation.

660 JOINTING PIPEWORK - ABS, MUPVC, PVC-C AND PVC-U

- Jointing: Solvent welded.

675 COATED PIPES

- Cutting: Recoat bare metal.

680 ELECTRICAL CONTINUITY

- Joints in metal pipes with flexible couplings: Make with clips (or suitable standard pipe couplings) supplied for earth bonding by pipework manufacturer to ensure electrical continuity.

685 IDENTIFICATION OF INTERNAL FOUL DRAINAGE PIPEWORK

- Markings: To BS 1710.
  - Type: Black, with arrows to indicate direction of flow.
  - Wording: White lettering 'FOUL DRAINAGE' on a black background.
- Type: Integral lettering on pipe wall, self-adhesive bands or identification clips.
- Locations: At 500 mm centres, junctions and both sides of slabs, valves, appliances, bulkheads and wall penetrations.

695 DISCHARGE AND VENTILATION STACKS

- Terminations: Perforated cover or cage that does not restrict airflow.
  - Material: As stack.

703 FIXING INSULATION TO INTERNAL PIPELINES

- Fixing: Secure and neat. Provide continuity at supports and leave no gaps. Fix split pipe insulation with the split on 'blind' side of pipeline.
  - Method: Waterproof adhesive.
- Timing: Do not fit insulation until completion of pipe airtightness or leakage testing.

705 ACCESS FOR TESTING AND MAINTENANCE

- General: Install pipework with adequate clearance to permit testing, cleaning and maintenance, including painting where necessary.
- Access fittings and rodding eyes: Position to avoid obstruction.

COMPLETION

Project Co. shall protect the system from damage or interference during the works.

Project Co. shall Test, flush and clean the system as per SHTM/HTMs and BS EN 12056

Project Co.’s defects and liability period shall be as the contract prelims.

900 TESTING GENERALLY

- Dates for testing: Give notice.
  - Period of notice (minimum): 5 working days.
- Preparation:
  - Pipework: Securely fixed and free from obstruction and debris.
  - Traps: Filled with clean water.
- Testing:
  - Supply clean water, assistance and apparatus.
  - Do not use smoke to trace leaks.
- Records: Submit a record of tests.

905 PIPEWORK AIRTIGHTNESS TEST

- Preparation:
  - Open ends of pipework: Temporarily seal using plugs.
  - Test apparatus: Connect a 'U' tube water gauge and air pump to pipework via a plug or through trap of an appliance.
- Testing: Pump air into pipework until gauge registers 38 mm.
- Required performance: Pressure of 38 mm is to be maintained without loss for at least three minutes.

910 SIPHONAGE AND BACK PRESSURE TESTS

- Method:
  - WC pans: Test by flushing.
  - Other appliances: Test by filling to overflow level, then removing the plug.
- Number of tests: Test each appliance three times. Recharge traps before each test.
- Self siphonage testing: Test each appliance individually.
- Induced siphonage and back pressure testing: Test by discharging the following numbers of appliances simultaneously on each stack:
  - WCs: In accordance with the code of practice.
  - Washbasins: In accordance with the code of practice.
  - Sinks: In accordance with the code of practice.
  - Selection of appliances: Submit proposals.

915 PREHANDOVER CHECKS

- Temporary caps: Remove.
- Permanent blanking caps, access covers, rodding eyes, floor gratings and the like: Secure complete with fixings.

920 SUBMITTALS

- Manufacturer's instructions for grease traps and manufacturer’s instructions for maintenance of all systems and insert in WW O&M manuals as required.

Specification Check / Revision Sheet

Project	**RHSC and DCN Edinburgh Hospitals**	Project Number	**G1547**
Service (s)	**Mechanical**	Sheet	**WW AP.1.2.12 SMcK G1547**
Performance Specification Title	**Rainwater Drainage System**	Date	**August 2014**
Prepared By	**DW**	Checked By	**SMcK**

Revision Ref.	Date of Revision	Page N$^{o(s).}$	Revision Details	Checked By
FT	December 2013	All	Final Tender	SMcK
FC	July 2014	All	Update for Financial Close	SMcK
FC	August 2014	All	Comments Incorporated	SMcK

RHSC and DCN EDINBURGH
RAINWATER DRAINAGE SYSTEM

CONTENTS

1.0	GENERAL INTRODUCTION
2.0	SCOPE
3.0	SPECIFIC EXCLUSIONS
4.0	INTERFACES AND DEMARCATIONS
5.0	APPLICABLE STANDARDS
6.0	DESIGN CRITERIA
7.0	LIAISON
8.0	SYSTEM DESCRIPTION

MATERIALS AND WORKMANSHIP CLAUSES

R10	RAINWATER DRAINAGE SYSTEMS

1.0 GENERAL INTRODUCTION

Purpose of Document

The development of the design, manufacture, supply, installation, wiring, setting to work and commissioning of the works described in this document shall be undertaken by Project Co..

To carry out the development of the design, Project Co. shall obtain the necessary supporting documentation.

This specification relates to the Rainwater Drainage Systems serving the RHSC-DCN Building and the adjacent Energy Centre.

This specification shall be read in conjunction with all other mechanical and electrical engineering services specifications and the Architectural drawings.

Description of Project

The new facility shall re-provide services from the Royal Hospital for Sick Children, Child and Adolescent Mental Health Service and the Department of Clinical Neurosciences in a single building adjoining the Royal Infirmary of Edinburgh at Little France.

The DCN part of the Facilities will have a physical link with the existing RIE Facilities specifically with the critical care unit.

The building is generally constructed from reinforced concrete.

The basement houses FM support facilities and the main building services heat distribution centres and electrical plant rooms.

Ventilation plantrooms are generally located at roof level and level 2.

A central Energy Centre shall be provided to the South of the hospital housing heating, CHP, standby generation, fuel storage and utility incomers.

2.0 SCOPE

The scope of work covered by this Specification shall include, but not be limited to, the following:-

- Internal rainwater pipework installation

3.0 SPECIFIC EXCLUSIONS

The following is specifically excluded from the scope of this Specification:-

- External Rainwater Pipework and system.
- Below Ground Drainage Systems
- Above Ground Foul Drainage Systems

4.0 INTERFACES AND DEMARCATIONS

Rainwater outlets at roof level shall be coordinated with the roofing construction. The interface with the below slab surface water drainage shall be at the connection to the ground floor drainage pop-up.

5.0 APPLICABLE STANDARDS

All elements of the works shall be in accordance with the requirements of current legislation, regulations and industry standards unless otherwise stated.

The Rainwater Drainage system shall accord with all appropriate Scottish Health Technical Memoranda, Codes of Practice and relevant British and European Standards.

6.0 DESIGN CRITERIA

Design criteria will be based upon BS EN 12056:3-2000.

7.0 LIAISON

Project Co. shall include for liaison with:-

Health and Safety Professionals. As well as the Health and Safety requirements of Parts A, B and C of this specification, Project Co. shall include for close liaison with Health and Safety professionals including the Trust's Health and Safety Advisors and the CDM Co-ordinator and shall comply with the CDM Regulations and all Health and Safety regulations.

Specialist Installers Project Co. shall liaise with other Specialists as necessary to ensure that all interfaces between the internal rainwater pipework installations and other systems are allowed for.

Building Control, Project Co, shall liaise with and adhere to, the requirements of the Building Control Officer. Any other member of the Project and Board teams concerned with the planning and administration of the Ventilation System.

8.0 SYSTEM DESCRIPTION

INTERNAL RAINWATER PIPE SYSTEM

Surface water shall be collected from roof, balcony and couryard areas by rainwater water outlets connected to a system of vertical and horizontal pipework distributed within the building, to connect to the in-slab/underground surface water drainage system.

The system shall be configured to permit rainwater to pass uninterrupted from the point of collection at roof level to a point of discharge at ground floor level. At this level the rainwater pipe system shall discharge to the below ground drainage system.

The rainwater drainage system shall comprise of the pipework system from and the roof level rainwater outlets, by others, to the connection to the in-slab/in-ground surface water drainage system.

Rainwater outlets shall be specified by the Architect.

The stainless steel pipe shall be socket and spigot push fit pipe and fittings manufactured to EN 1124 Parts 1 & 2 and shall be installed in accordance with the manufacturer's recommendations in order to achieve the pressure ratings required.

The connection between the stainless steel internal rainwater pipes, of 110, 160 and 200mm OD, respectively to the below slab drainage shall be by means of a suitable coupling approved by the engineer, to ensure continuity of the pressure rating of the system.

Where there is any discrepancy between the ODs of the rainwater pipe and the plastic/cast iron drainage pipe an approved metal insert shall be provided to the drain pipe to enable the correct application of the coupling and the integrity of the system.

Insulation against surface condensation shall be provided on all internal rainwater pipes throughout the installation. Insulation shall be pre-formed mineral wool, foil faced matt with taped joints and a vapour seal.

Insulation (for acoustic purposes) to main vertical soil rainwater stacks and horizontal rainwater branches, within ceiling voids, shall be provided on all pipework that passes through sensitive areas of the building, e.g. consulting rooms, meeting rooms and other quiet/sensitive areas, etc. Acoustic insulation shall be Isol Acoustic Wrap by Geberit or equal and approved, and to suit the Acoustic Consultant's requirements and strategy.

There shall be a dedicated rainwater pipe serving the helipad, running from the helipad to the below slab drainage system. This shall connect to the helipad pipework (by helipad specialist) and the connection to the below slab drainage (by the structural engineers). The pipework shall be installed with pressure rated couplings capable of withstanding the maximum head of water possible in the event of blockage in the system.

The detail of pipework passing through the basement retaining walls shall be by the structural engineer.

MATERIAL AND WORKMANSHIP CLAUSES

R10 Rainwater drainage systems

GENERAL

The rainwater drainage system will comply with the relevant clauses of SHTM Scottish Building Regulations, BS EN 12056:3, and the descriptions and requirements set out below.

The Architect is responsible for all rainwater outlets, gutters, hopper heads and external rainwater pipes including their type, size, location, material selection, colours/surface finishes, and method of installation.

The Architect is responsible for the external rainwater pipe interface connection with the below ground/slab surface water drainage connection points.

Roof outlet shall be supplied to all flat, upside-down and green roof areas.

The in-slab/underground drainage system, including all drain connection points, shall be the responsibility of the Structural/Below Ground Drainage Engineer.

110 GRAVITY RAINWATER DRAINAGE SYSTEM

Rainwater outlets: All roof rainwater outlets, with the exception of perimeter outlets, will be of the vertical spigot, anti vortex type to give an enhanced performance. Provisions shall be made for electrical continuity on all internal rainwater pipes and should be tested in accordance with the requirements stipulated within BS EN 877.Access points (full bore) for cleaning will be provided on all rainwater pipes. They typically will be at 1200 mm above finished floor level on each floor as appropriate but especially at ground floor level, and will be aligned with the architectural access provision. A gravity, internal rainwater pipework system shall be provided for this building The system shall be designed to maintain the highest standards of public and environmental health.

Gutters: Guttering shall be part of the Architectural package.
Pipework: External down pipes shall be part of the Architectural package.
Below ground drainage: Underground drainage shall be by the Structural Engineers.
Disposal: To surface water drainage.
Controls: Not applicable.
Accessories: Insulation to internal downpipes.

SYSTEM PERFORMANCE

The design rainfall intensity will be based upon BS EN 12056:3.

221 COLLECTION AND DISTRIBUTION OF RAINWATER

- General: Complete, and without leakage or noise nuisance.

230 DESIGN PARAMETERS - GENERAL

- Roof and gutter construction and finish: The internal rainwater system shall be based upon the flow and pipe diameters given within BS EN12056: Part 3 building envelope design life of 60 years and category 2 protection for valley and parapet gutters providing + storm return period of 90 years shall be adopted.

- Design rate of rainfall: As BS EN 12056-3, National Annex NB.4.
  - Category: 2
- Design life of building: As Architects specification. 60 years.
- Available capacity of existing below ground drainage (maximum): As Structural Engineers specification.

431 STAINLESS STEEL PIPEWORK

- Standard:

All internal rainwater pipes shall be stainless steel to AISI 304 and shall be installed in a manner to withstand 3bar internal pressure within the pipework system for the rainwater pipes serving the Tower Block, and 2bar for all other areas.

The stainless steel pipe shall be socket and spigot push fit pipe and fittings manufactured to EN 1124 Parts 1 & 2 and will be installed in accordance with the manufacturer's recommendations in order to achieve the pressure ratings required.

The connection between the stainless steel internal rainwater pipes, of 110, 160 and 200mm OD, respectively to the below slab drainage will be by means of a pressure rated coupling to ensure continuity of the pressure rating of the system.

Where there is any discrepancy between the ODs of the rainwater pipe and the plastic drainage pipe an approved metal insert shall be provided to the drain pipe to enable the correct application of the coupling and the integrity of the system.

Where it is possible rainwater pipes from outlets will be connected together to reduce the number of connections to the below ground drainage. Rainwater pipes will be positioned where a straight route through the building is possible so minimising offsets.

- Manufacturer: Submit proposals.
  - Product reference: Submit proposals.
- Shape: Round.
- Thickness: 1.0 mm.
- Nominal size: 110 mm diameter.
- Sealing rings: EPDM to BS EN 681-1.
- Brackets: To match pipework.
  - Fixings: Stainless steel screws.

  Size: As drawings and schedule.
- Accessories: Access fittings and Insulation.

445 INSULATION TO INTERNAL GUTTERS

- Material: Foil faced mineral fibre.
- Thermal conductivity (maximum): 0.045 W/m"K.
- Manufacturer: Submit proposals.
  - Product reference: Submit proposals.
- Recycled content: Submit proposals.
- Thickness: To suit guttering.
- Fire performance: Class 1 spread of flame when tested to BS 476-7 or Class CL to BS EN 13501-1.

450 INSULATION TO INTERNAL PIPELINES

- Material: Insulation against surface condensation will be provided on all internal rainwater pipes throughout the installation. Insulation will be pre-formed mineral wool, foil faced matt with taped joints and a vapour seal.
- Thermal conductivity (maximum): 0.045 W/m"K.
- Manufacturer: Submit proposals.
  - Product reference: Submit proposals.
- Recycled content: Submit proposals.
- Thickness: To suit pipelines.
- Fire performance: Class 1 spread of flame when tested to BS 476-7 or Class CL to BS EN 13501-1.

455 MASKING PLATES

- Manufacturer: Submit proposals.
  - Product reference: Submit proposals.
- Material and finish: Stainless steel.
- Fixing: Raised head screws.

EXECUTION

Project Co. shall ensure all works carried out shall be done is a safe manner and comply with Health and Safety regulations.

This shall include clean and tidy working and working in confined spaces.

600 PREPARATION

- Work to be completed before commencing work specified in this section:
  - Below ground drainage. Alternatively, make temporary arrangements for dispersal of rainwater without damage or disfigurement of the building fabric and surroundings.
  - Painting of surfaces which will be concealed or inaccessible.

605 INSTALLATION GENERALLY

- Electrolytic corrosion: Avoid contact between dissimilar metals where corrosion may occur.
- Plastics and galvanized steel pipes: Do not bend.
- Allowance for thermal and building movement: Provide and maintain clearance as fixing and jointing proceeds.
- Protection:
  - Fit purpose made temporary caps to prevent ingress of debris.
  - Fit access covers, cleaning eyes and blanking plates as the work proceeds

630 INSTALLING RAINWATER OUTLETS

- Fixing: Secure. Fix before connecting pipework.
  - Method: Rainwater outlet shall be installed to builder’s detail.
- Junctions between outlets and pipework: Accommodate movement in structure and pipework.

635 FIXING PIPEWORK

- Pipework: Fix securely, plumb and/ or true to line.
- Branches and low gradient sections: Fix with uniform and adequate falls to drain efficiently.
- Externally socketed pipes and fittings: Fix with sockets facing upstream.

- Additional supports: Provide as necessary to support junctions and changes in direction.
- Vertical pipes:
  - Provide a load bearing support at least at every storey level.
  - Tighten fixings as work proceeds so that every storey is self supporting.
  - Wedge joints in unsealed metal pipes to prevent rattling.
- Wall and floor penetrations: Isolate pipework from structure.
  - Pipe sleeves: As Section P31.
  - Masking plates: Fix at penetrations if visible in the finished work.
- Expansion joint pipe sockets: Fix rigidly to buildings. Elsewhere, provide brackets and fixings that allow pipes to slide.

640 FIXING VERTICAL PIPEWORK

- Bracket fixings: To suit bracket and pipework.
- Distance between bracket fixing centres up to a maximum of 3000mm but subject to the Manufacturer’s specific fixing instructions.

650 JOINTING PIPEWORK AND GUTTERS

- General: Joint with materials and fittings that will make effective and durable connections.
- Jointing differing pipework and gutter systems: Use adaptors intended for the purpose.
- Cut ends of pipes and gutters: Clean and square. Remove burrs and swarf. Chamfer pipe ends before inserting into ring seal sockets.
- Jointing or mating surfaces: Clean and, where necessary, lubricate immediately before assembly.
- Junctions: Form with fittings intended for the purpose.
- Jointing material: Strike off flush. Do not allow it to project into bore of pipes and fittings.
- Surplus flux, solvent jointing materials and cement: Remove.

655 JOINTING INTERNAL PIPEWORK

- Jointing: The stainless steel pipe will be socket and spigot push fit pipe and fittings manufactured to EN 1124 Parts 1 & 2 and will be installed in accordance with the manufacturer's recommendations in order to achieve the pressure ratings required.

680 FIXING INSULATION TO INTERNAL PIPELINES AND GUTTERS

- Fixing: Secure and neat. Provide continuity at supports and leave no gaps. Fix split pipe insulation with the split on 'blind' side of pipeline.
  - Method: Waterproof adhesive.
- Timing: Do not fit insulation until completion of pipe airtightness or leakage testing.

685 IDENTIFICATION OF INTERNAL RAINWATER PIPEWORK

- Markings: To BS 1710.
  - Type: Black, with arrows to indicate direction of flow.
- Wording: White lettering 'RAINWATER DRAINAGE' on a black background.
- Type: Permanent; integral or painted pipe colour, self-adhesive bands or identification clips.
- Locations: Junctions, both sides of slabs, bulkheads and wall penetrations.

690 ELECTRICAL CONTINUITY - PIPEWORK

- Joints in metal pipes with flexible couplings: Use clips (or suitable standard pipe couplings) supplied for earth bonding by pipework manufacturer to ensure electrical continuity.

700 ACCESS FOR TESTING AND MAINTENANCE

- General: Install pipework and gutters with adequate clearance to permit testing, cleaning and maintenance, including painting where necessary.
- Access fittings and rodding eyes: Position so that they are not obstructed.

COMPLETION

Project Co. shall protect the system from damage or interference during the works.
Project Co. shall Test, flush and clean the system as per SHTM/HTMs and BS EN 12056-2 's defects and liability period shall be as the contract prelims.

900 TESTING GENERALLY

- Dates for testing: Give notice.
  - Period of notice (minimum): 7 days.
- Preparation:
  - Pipework: Complete, securely fixed, free from defects, obstruction and debris before testing.
- Testing:
  - Supply clean water, assistance and apparatus.
  - Do not use smoke to trace leaks.
- Records: Submit a record of tests.

906 INTERNAL PIPEWORK TEST - SCOTLAND

- Standard: To BS EN 12056-2, National annex NG.

915 MAINTENANCE INSTRUCTIONS

- General: Submit to WW O&M system as required, and submit printed instructions recommending procedures for maintenance of the rainwater installation, including full details of recommended inspection, cleaning and repair procedures.

920 IMMEDIATELY BEFORE HANDOVER

- Construction rubbish, debris, swarf, temporary caps and fine dust which may enter the rainwater system: Remove. Do not sweep or flush into the rainwater system.
- Access covers, rodding eyes, outlet gratings and the like: Secure complete with fixings.

Specification Check / Revision Sheet

Project	**RHSC and DCN Edinburgh Hospitals**	Project Number	**G1547**
Service (s)	**Mechanical & Electrical**	Sheet	**WW AP.1.2.1 SMcK G1547**
Performance Specification Title	**Site External Services**	Date	**August 2014**
Prepared By	**BR**	Checked By	**SMcK**

Revision Ref.	Date of Revision	Page N$^{o(s).}$	Revision Details	Checked By
FT	December 2013	All	Final Tender	SMcK
FC	July 2014	All	Update for Financial Close	SMcK
FC	August 2014	All	Comments Incorporated	SMcK

RHSC and DCN EDINBURGH
EXTERNAL SERVICES

CONTENTS

1.0 GENERAL INTRODUCTION

2.0 SCOPE

3.0 SPECIFIC EXCLUSIONS

4.0 INTERFACES AND DEMARCATIONS

5.0 APPLICABLE STANDARDS

6.0 DESIGN CRITERIA

7.0 LIAISON

8.0 SYSTEM DESCRIPTIONS

8.1 Water Supply Services
8.1.1 Site Water Mains
8.1.2 Incoming Water Supply
8.1.3 Incoming Fire Main Supply
8.1.4 Supply to Sprinkler Tank
8.1.5 Pipework, Installation and Testing

8.2 Gas Supply System

8.3 Medical Gases Pipework Duct

8.4 MV Site Distribution Systems

8.5 LV Services for External Lighting, Signage, Car Park Control & Security – General

8.6 BMS Site Links and FM Services

8.7 Telephone Ducts

8.8 Ducts for IT Cabling

8.9 CCTV & Security

8.10 Remote External Installations

8.11 Draw Pits

8.12 Ducts Generally

8.13 Colour Coding of Underground Ducted Services

MATERIALS AND WORKMANSHIP CLAUSES

S10 INCOMING COLD WATER SUPPLY SYSTEMS

S32 NATURAL GAS SUPPLY SYSTEMS

S65 FIRE HYDRANT SYSTEM

V24 HIGH VOLTAGE CABLING

V32 LOW VOLTAGE CABLING

Y12 MECHANICAL CLEANING AND CHEMICAL TREATMENT

Y50 MECHANICAL COMMISSIONING

1.0 GENERAL INTRODUCTION

Purpose of Document

The procurement, development of the design, manufacture, supply, installation, wiring, setting to work, testing and commissioning of the Works described in this document shall be undertaken by the Mechanical & Electrical Installer, referred to in this document as "".

To carry out the development of the design, Project Co. Project Co. shall where specified employ the services of a Specialist for particular elements of the Works. The Specialist shall be provided with the necessary.

This Specification relates to the mechanical and electrical services related to the site external services.

This Specification shall be read in conjunction with all other mechanical and electrical engineering services specifications and the architectural and civil engineering specifications and drawings.

Description of Project

The new facility shall re-provide services from the Royal Hospital for Sick Children, Child and Adolescent Mental Health Service and the Department of Clinical Neurosciences in a single building adjoining the Royal Infirmary of Edinburgh at Little France.

The DCN part of the Facilities will have a physical link with the existing RIE Facilities specifically with the critical care unit.

The building is generally constructed from reinforced concrete.

The basement houses FM support facilities and the main building services heat distribution centres and electrical plant rooms.

Ventilation plantrooms are generally located at roof level and level 2.

A central Energy Centre shall be provided to the South of the hospital housing heating, CHP, standby generation, fuel storage and utility incomers.

2.0 SCOPE

The scope of work covered by this specification shall include, but not be limited to the following:-

- Gas supply system from incoming meter outlet to entry points to buildings.
- Water supply system, including fire fighting mains from incoming meter outlet to entry points to building.
- MV power installations from 11kV point of connection(s) to entry points to buildings, including control and monitoring.
- LV power site distribution.
- External lighting services.
- Medical gas oxygen pipework duct for pipework installation by others.

- Ducts for BMS for cable installation by others.
- Ducts for security and CCTV systems for cable installation by others.
- Telephone ducts for cable installation by others.
- Data/telecoms ducts for cable installation by others
- FM services low current cable ducts for cable installation by others.
- Provisions for water proofing below ground services penetrations through the structure.

3.0 SPECIFIC EXCLUSIONS

The following is specifically excluded from the scope of this Specification:-

- Existing buried services, including diversions and any temporary and/or enabling works.
- Cabling associated with Specialist's works including: automatic controls & BMS, fire detection and alarm system, security & CCTV, data and telecoms.
- Any works on utility service incoming pipe, meter and the utility owned services.
- Any works in relation to the Scottish Power Energy Networks owned services.
- Any work on existing data and telecom cables.

4.0 INTERFACES AND DEMARCATIONS

The site external services systems shall be provided as complete working systems, however the installation work shall be required to comply with the phasing and sequencing of the site works required by

Project Co. shall provide information to other parties for power supplies and fire alarm system and BMS interfaces.

5.0 APPLICABLE STANDARDS

All elements of the Works shall be in accordance with the requirements of current legislation, regulations and industry standards unless otherwise stated.

Underground utilities apparatus shall be positioned and colour coded in accordance with the guidelines issued by The National Joint Utilities Group.

The fire protection systems shall accord with all appropriate Hospital Technical Memoranda, Codes of Practice and relevant British and European Standards listed in the SHTM's.

The equipment supplied shall conform with all relevant standards and regulations in force. The equipment shall be supplied with relevant Declarations of Conformity to certify compliance with the EMC directive 89/336/EEC-92/31/EEC and the Machinery Safety Directive 89/392/EEC-91/368/EEC-93/44/EEC. Also the equipment and installation shall comply with all relevant statutory requirements in force at the time:

The gas supply system shall accord with all appropriate Hospital Technical Memoranda, Codes of Practice and relevant British and European Standards.

- The gas supply and distribution systems shall comply with the relevant clauses of BS6644,
- IGEM Guidance, Clean Air Act, and descriptions and requirements set out below.

6.0 DESIGN CRITERIA

Electricity Supply Characteristics

MV power characteristics: 11000 V, 3-phase, 50 Hz.
LV power characteristics: 400/230 V, 3-phase, 50 Hz, 230 V, 1-phase, 50 Hz.

Gas pressures

Low pressure supply at outlet of meter: 65mbar

Incoming Water Main Pressure

Minimum Water Pressure: 1.0bar

7.0 LIAISON

Project Co. shall include for liaison with:-

Health and Safety Professionals. As well as the Health and Safety requirements of this Specification, Project Co. shall include for close liaison with Health and Safety professionals including the Hospital's Health and Safety Advisors and the CDM Co-ordinator and shall comply with the CDM Regulations and all Health and Safety regulations.

Other Specialist Project Co. shall liaise with other specialist as necessary to ensure that all interfaces are allowed for.

Building Control. Project Co. shall liaise, with and adhere to, the requirements of the Building Control Officer.

Any other member of the Project and Board teams concerned with the planning and administration of the site services systems.

Local authority for the disconnection of the public footpath lighting.

Any other member of the project and Hospital Board teams concerned with the planning and administration of the services.

Drawings

This Specification shall be read in conjunction with WW site services drawing No. WW-EW-XX-PL-750-001.

Site Levels

The site levels are indicated on the Architects drawings and the External Civil Engineering drawings.

8.0 SYSTEM DESCRIPTIONS

8.1 Water Supply Service

8.1.1 Site Water Mains

A combined Fire and Domestic water main shall be taken from the Scottish Water main in Craigmillar Castle Road. The main shall be run from this point which provides dual supply to the site boundary by an appropriate accredited installer who will be responsible for the design and instruction.

The supply will be split at the boundary to provide a separate metered 100mØ DI domestic supply and an unmetered 150mm fire main.

8.1.2 Incoming Water Supply

Wholesome water shall be derived from the separate incoming water supply entering the basement tank room. A water meter shall be incorporated on the supply with direct reading and a BMS interface.

8.1.3 Incoming Fire Main Supply

A 150mm unmetered fire main supply shall be taken from the 150mm water supply connection at the boundary.

The 150mm DI fire main shall be run around the RHSC-DCN Building with branches to serve underground hydrants.

The fire hydrants shall be in purpose made chambers below ground in accordance with the requirements of Water for Scotland 2 Edition, and the local Fire Authority and be fitted with a sluice valve. The hydrant cover shall be as required by Strathclyde Fire & Rescue and badged Fire Hydrant.

Fire hydrants shall be located as close as practicable to the fire main, preferably directly above the main to reduce dead leg lengths to an absolute minimum.

8.1.4 Supply to Sprinkler Tank

A 150mm DI branch shall be taken from the external fire main and enter the hospital basement at high level.

The 150mm supply shall be routed into the tank room to serve as a fill supply for the sprinkler tanks. The supply shall be capable of isolation within the tank room and shall be unmetered

8.1.5 Pipework, Installation and Testing

The installation of wholesome water services shall comply with and to the approval of Scottish Water Byelaws.

All pipework for underground installation shall be light weight ductile iron to BS EN 545.

8.2 Gas Supply

The gas supply to the site shall be fed from a twin stream metering assembly operating at low pressure (65mbar), located on the site boundary adjacent to the Old Dalkeith Road.

The meter housing and base for the metering assembly shall be provided by Smart Metering Systems.

The low pressure installation pipe down stream of the metering equipment shall be buried alongside the main entrance roadway to serve pressure regulating equipment and plant located within the Energy Centre.

The boiler plant and CHP plant located within the Energy Centre shall be fed by the low pressure gas supply, thus avoiding the need for individual plant gas boosters.

All individual gas supplies shall be locally sub-metered and provided with pulsed outputs for monitoring by the BMS system.

Pipework

Buried pipework shall be in accordance with the recommendations of the Institute of Gas Engineers and Managers Document IGEM/UP/2 Edition 2. Minimum depth and position in the ground for pipework shall comply with Table 10.

Proprietary plastic warning marker tapes or 150 mm wide mesh shall be laid along the pipe run during backfilling and positioned between 150 mm and to 225 mm below ground level, the tape or mesh to have a stainless steel wire for pipe detection on plastic pipework systems.

All gas distribution pipework shall be installed by Gas Safe Register registered installers in a manner compliant with the requirements of the Gas Safety Regulations and Institute of Gas Engineers and Managers Standards and Recommendations.

Project Co. shall install all underground pipework in gas quality MDPE pipe and fittings and in compliance with the IGEM and pipework manufacturers' recommendations.

A separation of 3000 mm shall be maintained between the MDPE pipework and all buildings. Where this separation cannot be maintained then steel pipework, black heavy weight to BS 1387, shall be installed and double wrapped with self-adhesive plastic tape or petroleum, impregnated woven cloth. Wrapping shall only take place after testing has been successfully carried out and witnessed.

All isolating valves shall be accessed via valve boxes as indicated on the drawings. The valves selected shall be suitable for this method of access.

Project Co. shall ensure that, at the end of each working period, any open pipe end is capped off to prevent the ingress of dirt, dust, water, etc

The pipework shall enter buildings above ground unless otherwise indicated. The pipework material shall change from MDPE to steel as it enters the building.

The Board shall be responsible for purging the section of pipework prior to commencing work.

Upon completion of the installation the services Board shall provide flow rate and pressure readings at all outlets.

8.3 Medical Gases Pipework Duct

For full details of the medical gas requirements refer to separate Specification WW-AP1.2.14 SMcK G1547.

The Board shall construct and install a purpose built ground duct as indicated on the drawings to accommodate the medical gas pipework between the VIE enclosure and the hospital. The pipework shall be designed and installed by the Medical Gases Specialist under a separate contract.

8.4 MV Site Distribution Systems

The information contained in this Specification is for general information only. For full details of the MV installation including the site distribution systems refer to Specification WW-AP1.2.23 SMcK G1547.

Incoming electrical supplies

SPEN are providing two incoming electrical supplies each with a rating of 3MVA. These are to be arranged such that if either fails the other is capable of taking the complete building load at 3MVA.

The incoming MV electrical supplies shall be terminated within the new sub-station located within the energy centre.

General Description

The MV systems shall be required to safely distribute the outputs from the available incoming supplies, MV standby generators, and CHP to the distribution load centres.

The cabling for these circuits shall be buried direct in soft landscapes and drawn into cable ducts and pits under roads, hard standings and extensive paved areas.

The nominal minimum depth for all buried MV cables shall be 1000mm below finished ground level, unless otherwise indicated. Cable route markers shall be installed where practical along the whole route of each cable, and warning tapes and tiles incorporated in the trench for both direct-buried and ducted cables with the exception of the incoming SPEN supplies all MV cabling will be run internally within the Energy Centre and via the service trenches and underground ducts to the main RHSC-DCN building.

Energy Centre and Site Distribution

Details of the site cable routes and the cable routes within the Energy Centre are indicated on the drawings accompanying this Specification.

8.5 LV Services for External Lighting, Signage, Car Park Control & Security – General

Project Co. shall supply and install new feeder pillars as indicated on the drawings and schedules, and shall install permanent sub-main feeds to these.

The road lighting services including the main pedestrian route lighting, for the main site traffic roads to the RHSC-DCN Building and for the main service road around the RHSC-DCN Building, shall be provided and installed under the main external roadway construction package. This lighting including its feeder pillars, controls and final circuitry, has been specified and set out by the Civil Engineer.

External luminaires other than roadway lighting are specified in the Schedule of Luminaires. The types of amenity lighting luminaires have been specified by the Landscape Architect to suit the intent of the external works Masterplan.

External amenity lighting, illuminated signs, fire brigade direction signs and indicators, and any other equipment physically mounted on the RHSC-DCN Building and the Energy Centre shall be provided and installed under the appropriate building design package, and are excluded from this external works package.

External amenity and footpath lighting, illuminated signs, car park barriers, fire brigade direction signs and any other equipment mounted independently from buildings shall be provided and installed under this external works package.

The external lighting, illuminated signs, car park barriers, fire brigade direction signs, bus shelters and any other equipment shall be served from distribution boards installed in LV external lighting feeder pillars, or within buildings and outbuildings. External LV feeder pillars shall be served by LV feeds from the RHSC-DCN Building, as shown on the drawings. These shall all be located generally as indicated on the external works drawings; their precise location co-ordinates shall be given on the Landscape Architect's layout drawings. Any illuminated external signs shall have their lighting connected to a convenient local photocell controlled external lighting circuit.

Where bus shelters incorporate a digital information system, a permanent supply for the display shall be taken from a convenient feeder pillar if no permanently live lighting circuit is available locally. Requirements for such displays shall be identified by the Specialist.

External amenity lighting control shall generally be provided by photocells. Column mounted lighting shall be controlled by photocells integral with the luminaires. Bollard and decorative or indirect lighting which cannot be fitted with individual photocells shall be controlled by photocells mounted on suitable convenient local lighting columns, a suitable dedicated pole on or adjacent the feeder pillar, or on local building fabric, switching the whole circuit via a contactor in the feeder pillar.

Where several circuits from one feeder pillar are to be switched by photocell, a single photocell switching all circuits via a multiple contactor is acceptable. The details of the circuitry are indicated on the drawings and feeder pillar distribution schedules. Each lighting control contactor shall be mounted in the relevant feeder pillar, and shall be suitable for use in that environment. The cables shall be ducted or buried direct, as indicated on the drawings.

LV power supplies for CCTV Cameras shall be taken from local external lighting circuits as required (non contactor switched circuits). The CCTV provisions and the necessary power supply requirements shall be advised by the Security/CCTV Specialist.

8.6 BMS Site Links and FM Services

Ducts and draw-pits for the BMS and Facilities Management (FM) services linking the RHSC-DCN Building and Energy Centre shall be provided around the site. These shall carry the site FM fibre optic backbone link, the BMS site links and any BMS or FM links required to existing buildings off-site. The BMS cabling shall be installed by the controls specialist. Ducts for FM dedicated LV services shall be included. Draw ropes shall be left in the duct system for the use of the Specialist.

The changeover of existing BMS and other FM services serving existing buildings shall be co-ordinated with FM department.

8.7 Telephone Ducts

The telephone cabling shall be provided by the Hospital Board's Telephone Service Provider outside the scope of this Specification. Project Co. shall provide cable ducts to allow the Telephone Service Providers telephone service to be installed to the RHSC-DCN and to provide routes for Telephone Service Provider links with other buildings around the site. The ductwork system is intended to allow diverse routes into the Hospital to enhance system resilience. The duct system shall be as indicated on the drawings.

The drawings indicate the scope and general routes and an allowance for tender purposes for ducts and draw pits for Telephone Service Provider cabling.

Project Co. shall liaise with the Telephone Service Provider and with the Board to finalise the Specification of ducts and draw pits prior to installation to ensure that the cable ways meet the Provider's requirements. In particular the location of the terminal draw pits adjacent the site boundary, and the route of the ducts from it to the RHSC-DCN, shall be agreed with the Telephone Service Provider.

Project Co. shall leave all ducts complete with draw ropes and inspection chambers/draw pits, tested and ready for installation of cables by the Telephone Service Provider.

8.8 Ducts for IT Cabling

The incoming and cross-site IT (data/telecoms) cabling (including any NHS voice communications and internal telephone communication systems) shall be provided by others outside the scope of this Specification. Project Co. shall provide cable ducts to allow the installation of the cabling for these systems. A network of ducts and draw pits shall be provided as indicated on the layout drawing to provide diverse incoming service routes around the site.

The drawings indicate the scope and general routes and an allowance for tender purposes for ducts and draw pits for IT cabling. The Board shall detail draw pits and confirm that the locations shown meet the relevant specialist's cable laying requirements.

Project Co. shall liaise with the Board to finalise the Specification of ducts and draw pits prior to installation to ensure that the cable ways meet the Hospital IT requirements.

Project Co. shall leave all ducts complete with draw ropes and inspection chambers/draw pits, tested and ready for installation of cables.

8.9 CCTV & Security

External CCTV cameras and security systems such as vehicle control barriers shall be installed to cover the car parks, building entrances and approaches. Their locations shall be confirmed by the Security/CCTV System Specialist. Security system ducts shall be provided to serve the cameras located remote from buildings. The LV supplies for cameras shall be derived from permanently live local external lighting circuits or dedicated circuits from feeder pillars as required.

8.10 Remote External Installations

The alarms for the petrol interceptors on the drainage outflow from the car parks shall be provided with indication and alarm facilities. Ducts shall be installed as indicated on the drawings to link these to the security control room in the RHSC-DCN.

The outbuildings for the external medical gas and liquid oxygen (VIE) installations and support facilities shall be provided with an LV supply, telecom/data and alarm/monitoring service duct connections as indicated on the layout drawings.

8.11 Draw Pits

Draw/valve pits shall be provided as indicated on the drawings and constructed to meet the detailed requirements of the structural engineer and in numbers and spacings indicated by and agreed with the specialist services providers. The exact location and cover finish shall be confirmed by the landscape architect, and draw-pits shall be installed to the co-ordinates provided by the Landscape Architect. The locations indicated on the External Services drawings are indicative only.

Any combined Data/Telecoms/LV draw-pits shall be divided to suit the split between Data/Telecoms and LV at each pit. The divider shall provide effective physical segregation between the two services.

8.12 Ducts Generally

Ducts for MV (11kV), LV, ELV/Comms/Data/signals/controls cables shall be of HDPE or equal and approved material, unless specifically stated otherwise elsewhere in this or another Specification.

Any vacant cable ducts shall be left sealed and provided with draw ropes/cords for the use of cable installers.

Where cables have been installed in ducts into buildings, the ducts shall be sealed around the cables to meet the applicable standards appropriate to the services involved.

Multiservices duct systems shall be installed to form the site internal services distribution network as indicated on the drawings. These shall be generally as follows, and shall share sub-divided draw pits where indicated as Site Services on the drawings:

- Comms – Site incoming main fibre optic cable ducts from the site boundaries, providing diverse incoming routes for fibre optic telecoms and data into the Hospital.

  Internal data and telecommunications services (fibre optic/multicore copper as required by Data/Comms Specialist linking the new buildings and the existing estate.

- LV (Low Current) – FM services such as LV/ELV/Security/BMS/Site-wide copper multicore and fibre-optic controls/monitoring as required by the various systems specialist designers.

The purpose of each duct shall be allocated on site according to the services to be installed in each location.

8.13 Colour Coding of Underground Ducted Services

Project Co. shall agree with the Hospital Board a colour coding system that identifies the purpose of each duct. This system shall then be used on site over the re-development process.

The ducts in the combined site data, telecoms and LV system shall be black or another colour agreed with the Hospital Board. Individual service identification shall be provided by paint marking the duct ends in draw pits. Duct service allocation shall be defined by the telecom, data and other specialist services providers.

The following services shall be identified, using colours that are not designated by British Standards for water, gas, oil and other mechanical services.

MV
LV
ELV for security and fire alarms
ELV for communication services
ELV BMS cabling

MATERIALS AND WORKMANSHIP CLAUSES

S10 INCOMING COLD WATER SUPPLY SYSTEMS

110 INCOMING WATER SUPPLY

- Water company: Scottish Water/Business Stream
- Position of incoming mains water supply: As site plan Drawing No. WW-EW-XX-PL-750-001. 1 No. mains supply shall be taken onto the site from the Scottish Water main in Craigmillar Castle Road.

Site water mains shall be installed in accordance with Water for Scotland 2nd Edition and NJUG requirements for utility, apparatus with regards to depth, colour coding, identification markers, and position, and to the requirements of Scottish Water.

Site water mains shall be WRAS approved ductile iron the BS EN 545 complete with anchor gasket joints at all tee-pieces and changes of direction suitable for the site contaminated ground conditions and approved by Scottish Water. All backfill shall be from a clean source.

A leak detection water meter shall be incorporated with direct reading and a BMS interface onto the incoming mains supply at the entry to the site and at point of entry to the basement. All sub meters shall be linked to the BMS. All water meters shall be fitted with isolation valves.

Water connection point to Scottish Water main and the provision of dual supplies are subject to confirmation by Scottish Water.

SYSTEM PERFORMANCE

- The Hot and Cold water supply system shall be install, flushed, cleaned, tested and commissioned as per Water Byelaws SHTMs and HTMs. Where any standards or documents contradict one another Project Co. shall contact the Board for further guidance.

220 COLD WATER SUPPLY

- Incoming mains water supply:
  13. Site factors: One water main from the Scottish Water main in Craigmillar Castle Road.

PRODUCTS

Project Co. shall supply and install services and equipment to perform as per Specification. Project Co. shall submit details of all mechanical equipment for comment and place orders in a timely fashion to ensure delivery as per programme. Where a particular manufacture is specified, Project Co. shall include for that manufacturer.

Where considered appropriate, provide for equivalent standard alternatives to be offered for consideration. This must be done in a timely manner and Project Co. shall provide all details including but not limited to:

14. detailed description
15. Cost comparison
16. Technical comparison
17. References to standards
18. References to SHTM/HTMs

310 DEZINCIFICATION

- Fittings, pipelines and equipment located below ground or in concealed or inaccessible locations: Resistant to dezincification, e.g. gunmetal.

320 WATER METERS

Water meters shall be installed as indicated on drawings.
Stool pieces between isolating valves shall be provided for the ease of installation of local metering at a later date. Water meters shall be removed during the flushing of the system.

- Standard: To ISO 4064-1.
- Type: In-line meters. Shall be capable of being read by the clients BMS system.
- Size: To suit service.
- Pressure class: To suit service.
- Temperature class: To suit service.
- Metrological class: To suit service.
- Connections: To suit service.
- Indicating device: Type 2 - digital.
- Features: Pulsed output for remote monitoring.
- Accessories: To BS EN 14154-2.

EXECUTION

Project Co. shall ensure all works carried out shall be done is a safe manner and comply with Health and Safety regulations. This shall include clean and tidy working and working in confined spaces. Due to the size of the water systems being installed all pressure testing and commissioning equipment shall be cleaned and chlorinated before each use. This is to prevent the systems from being contaminated with pseudomonas.

620 INSTALLATION GENERALLY

- Installation: To BS EN 806 + BS 8558 and Water Byelaws
- Performance: Free from leaks and the audible effects of expansion, vibration and water hammer.
- Fixing of equipment, components and accessories: Fix securely, parallel or perpendicular to the structure of the building.
- Preparation: Immediately before installing tanks and cisterns on a floor or platform, clear the surface completely of debris and projections.

- Corrosion resistance: In locations where moisture is present or may occur, avoid contact between dissimilar metals by use of suitable washers, gaskets, and the like.

630 INSTALLING WATER METERS

- Standards: To BS EN 14154-2.
- Interconnection to Building Management System (BMS): Required.

COMPLETION

Project Co. shall protect the system from damage or interference during the works. shall Test, flush and clean the system as per section Y12, Y50,SHTM/HTM's and TR/20.
Project Co. shall submit O&M's as required by The Board
Project Co. shall provide training as per section Y12, Y40 & Y50.
Project Co. shall provide spares as per section Y12, Y40 & Y50.
Project Co's. defects and liability period shall be as the contract prelims.

910 HYDRAULIC PRESSURE TESTING OF HOT AND COLD WATER SUPPLY SYSTEMS

- Standard: To BS 6700.
- Notice (minimum): 1 week.
- Pressure: 1.5 times working pressure.
- Duration of test: 1 h.

980 DOCUMENTATION

- Manufacturers' operating and maintenance instructions: Submit for equipment and controls.
- System operating and maintenance instructions: Submit for the system as a whole giving optimum settings for controls.
- Record drawings: Submit drawings showing the location of circuits and operating controls.

990 OPERATING TOOLS

- Tools: Supply tools for operation, maintenance and cleaning purposes.
- Keys: Supply keys for valves and vents.

995 MAINTENANCE

- Servicing and maintenance: Undertake.
  19. Duration: Until 24 months after Practical Completion.

S32 NATURAL GAS SUPPLY SYSTEMS

110 INCOMING GAS SUPPLY

- Gas transporter: Medium pressure main.
- Gas supplier: Smart Metering Systems (UK Gas Connection).

PRODUCTS

All elements of the work shall be in accordance with the requirements of current legislation, regulations and industry standards.

The natural gas installation shall also comply to the SHTM's, code of practices and relevant British standards.

A proposed drawing list shall be submitted by .

Project Co. shall provide working drawings for the installation and issue them for comment before work commences.

310 SECONDARY GAS METERS

Secondary gas meters shall be installed as detailed on drawing and in this Specification. Gas meters shall be installed with isolation valves for maintenance.

- Standard:
  - Gas meters: To BS EN 1359.
  - Unions and adaptors: To BS 746.
  - Low pressure meters: In accordance with IGEM/GM/6.
  - Electrical connections: In accordance with IGEM/GM/7A & B.

- Project Co. shall submit technical details of the proposed meter.
- Accessories: Pulsed output for BMS monitoring.
- Housing type: To suit gas meter type.

330 LOW PRESSURE GAS SUPPLY PIPELINES

Over ground pipes 15 mm to 50 mm nominal size inclusive (internal) shall be Black mild steel to BS1307 heavyweight grade, screwed fittings if installed in a ventilated space, otherwise fully welded. Over ground pipes greater than 50mm shall be Black mild steel to BS1387 heavyweight grade welded throughout its length. All above ground natural gas pipe shall be painted yellow ochre.

- Standards: To BS EN 1775 and in accordance with IGEM/UP/2.
- Materials: Steel, heavy weight.

335 INDUSTRIAL GAS SUPPLY PIPELINES

- Standards: In accordance with IGEM/UP/2.
  - Up to and including 0.5 bar: To BS EN 1775.
  - From 0.5 bar up to 60 bar: To EN 15001-1.

- Material: Indoor above ground shall be Black mild steel to BS1387 heavyweight grade welded throughout its length and painted yellow ochre, Underground pipe shall be yellow medium density polyethylene thick wall pipes (PE80).
- Jointing method: Steel pipe wielded throughout its length, Fusion jointing of polyethylene.

400 SAFETY AND CONTROL DEVICES

- Standard: To BS EN 13611.

410 BALL VALVES, MANUALLY OPERATED

Valve shall be suitable for type of gas pipe in which they are installed.

- Standard: To BS EN 331.
- Type: Lever operated.
- Manufacturer: Project Co. choice.
  Product reference: Project Co. choice.
- Material: Bronze or dezincification resistant brass (DZR).
- Connections: Threaded.

420 PLUG VALVES, CAST IRON

Valve shall be suitable for medium pressure gas main.

- Standard: To BS 5158.
- Type: Regular.
- Manufacturer: Project Co. choice.
  - Product reference: Project Co. choice.
- Connections: To suit pipework.
- Options: Wrench.

425 PLUG VALVES, STEEL

Valve shall be suitable for medium pressure gas main.

- Standard: To BS 5353.
- Type: Regular.
- Manufacturer: Project Co. choice.
  - Product reference: Project Co. choice.
- Connections: To suit size of pipework.

430 PLUG VALVES, TAPER

Valve shall be suitable for type of gas pipe in which they are installed.

- Standard: To BS 1552.
- Type: Project Co. choice.
- Manufacturer: Project Co. choice.
  - Product reference: Project Co. choice.
- Material: Dezincification resistant brass (DZR) copper alloy
- Connections: Threaded.

EXECUTION

Project Co. shall ensure all works carried out shall be done is a safe manner and comply with Health and Safety regulations. This shall include clean and tidy working and working in confined spaces.

620 INSTALLATION GENERALLY

Installation: In accordance with IGEM/UP/10.

625 GAS SAFE REGISTRATION REQUIREMENTS

- Type of service: Non-domestic.
- Type of gas: Natural gas.
- Area of work:

The installation, testing and commissioning of the natural gas system shall be undertaken by a registered installer. A copy of the installer's certificate shall be attached to the test and commissioning documents.

630 INSTALLING GAS METERS

Secondary gas meters:

- Low pressure: In accordance with BS 6400-1.
- Medium pressure: In accordance with BS 6400-2.
- Non-domestic: In accordance with IGEM/GM/8.

650 INSTALLING GAS PIPELINES

- Installation: In accordance with BS EN 1775.

660 INSTALLING INDUSTRIAL GAS PIPELINES

- Standard: In accordance with EN 15001-1.

COMPLETION

Project Co. shall protect the system from damage or interference during the works.
Project Co. shall submit O&M's.
Project Co's. defects and liability period shall be as the contract.

930 COMMERCIAL AND INDUSTRIAL GAS INSTALLATIONS

- Soundness testing and purging: In accordance with IGEM/UP/1.
- Testing, purging and commissioning pipelines: In accordance with BS EN 1775 and BS EN 15001-2.
- Commissioning gas fired plant: In accordance with IGEM/UP/4

940 PRESSURE TESTING OF NATURAL GAS SUPPLY SYSTEMS

- Notice (minimum): 1 week.
- Pressure: 1.5 times working pressure.
- Duration of test: 1 h.

960 DOCUMENTATION

- Manufacturers' operating and maintenance instructions: Submit for equipment and controls.
- System operating and maintenance instructions: Submit for the systems as a whole giving optimum settings for controls.
- Record drawings: Submit drawings showing the location of circuits and operating controls.

970 OPERATING TOOLS

- Tools: Supply tools for operation, maintenance and cleaning purposes.
- Valve keys: Supply keys for valves and meter housing.
  - Quantity: 4 of each type.

S65 FIRE HYDRANT SYSTEMS

GENERAL

Fire hydrants shall be located as close as practicable to the main, preferably directly above the main, to reduce dead leg lengths to an absolute minimum.

The fire hydrant shall conform to BS 750: 2006 Specification for underground fire hydrants and surface box frames and covers and BS EN 14339: 2005 Underground fire hydrants and Water for Scotland 2nd Ed. 2007.

Hydrant main pipework shall be ductile iron to BE EN 545 complete with anchor gasket points at all tee-pieces and charges of direction installed in accordance with the pipe manufacturers requirements.

Pipe in trenches shall be laid on a minimum of 100mm bed of <20mm gravel or coarse sand and trenches shall ensure 900mm cover, measured from the crown of the pipe.

Pressure testing shall be undertaken in accordance with the requirements of the pipe manufacturer, the local Fire Authority and Water Authority.

Backfilling shall be undertaken in such a manner so as to avoid any deformation of the pipe.

Heavy compaction equipment shall not be used with less than 300mm of cover. A marker tape shall be laid 300mm above the crown of the pipe.

110 FIRE HYDRANT SYSTEM

This underground fire hydrants shall:
a) be installed in a water distribution system;
b) be size DN 80;
c) be suitable for a maximum allowable operating pressure (PFA) of 1.6 MPa or 2.5 MPa (16 bar or 25 bar);
d) be fitted with screw-down type valves; and with one outlet.

Comply with BS 750.
WRC approved materials of construction.
Standard outlet - 2½" male hydrant round thread (other options available).
Universal inlet flange (3" BS10 Table E or 80mm BS 4504 NP16)
Blank cap, chain and frost valve provided.

- Water source: new site fire main.
- Distribution: Ductile iron to BS EN 545
- Outlets: Underground fire hydrants.
- Accessories:
  - Indicator plates;
  - Surface boxes; and
  - Warning marker tape.
- Completion: Project Co. shall test, flush and clean the system as per regulations, SHTM/HTM's, this Specification and Fire Officer requirements.

SYSTEM PERFORMANCE

All fire hydrant pipework exposed to the frost shall be insulated or trace heated to prevent freezing.

210 DESIGN

- Standards: To BS EN 806-2 and in accordance with BS 9990.
- Design: Complete the design of the fire hydrant system.
- Proposals: Submit drawings, technical information, calculations and manufacturers' literature.
- Mains water supply to hydrants: Provide an independent water supply.
  - Evidence of capacity of mains water supply: Submit.

320 DUCTILE IRON PIPELINES

- Standard: To BS EN 545
- Manufacturer: Saint Gobain.
  - Product reference: Submit proposals.
- Jointing: Anchor Gasket (EPDM Gasket)

340 UNDERGROUND FIRE HYDRANTS

- Standards: To BS EN 1074-6 and BS 750.
- Hydrant type to BS EN 1074-6: Underground.
- Valve type to BS 750: Screw-down (type 2)

Valve shall be fully maintainable.

- Ductile iron construction.
- 2½_ London round thread gunmetal outlet to BS 750.
- Exceeds flow requirements:
- Kv = 92 minimum, 2000l/min,
- Kv = 101 maximum, 2200l/min.
- Corrosion resistant construction, compliant with BS EN 1074-6 for disinfection products.
- Universal drilled inlet flange BS EN 1092-2:1997, BS 10 Table D/E.
- Inlet is of a proprietary type.
- Auto-frost drain valve as standard.
- Draining stopper.
- Kite marked.
- Low weight design.
- WRAS approved.

- Manufacturer: Submit proposals.
- Product reference: Submit proposals.
- Duckfoot bend: Not required.
- Outlet material: Submit proposals.
- Plug: Submit proposals.
- Accessories: Spindle cap, outlet cap and frost valve.

350 INDICATOR PLATES

Shall be installed adjacent Hydrant

- Standard: To BS 3251.
  - Class: A.
- Manufacturer: Submit proposals.
  - Product reference: Submit proposals .
- Material: Cast iron.
- Finish: Vitreous enamel.
- Colours:
  - Characters: Black.
  - Front surface: Reference number 309 (Canary yellow) to BS 381C.
- Accessories: As Specification and schedule.

360 SURFACE BOXES

Shall be suitable for application e.g. footpaths, heavy traffic.

- Standard: To BS 750.
  - Grade: Submit proposals.
- Manufacturer: Submit proposals.
  - Product reference: Submit proposals (as recommended by Strathclyde Fire & Rescue).
- Material: Grey cast iron (CI).
- Finish: As structural Engineers Specification.
- Marking: 'FIRE HYDRANT' in 30 mm high letters.
- Accessories: Lifting keys and Marker posts.

370 WARNING MARKER TAPES

- Manufacturer: Board's choice.
  - Product reference: Submit proposals.
- Type: Continuous colour coded, heavy gauge polyethylene identification tapes.
- Wire detection aid: Required.

EXECUTION

The Board shall Test, flush and clean the system as per regulations, SHTM/HTM's, this Specification and Fire officer requirements.

610 ISOLATION

- Connection to existing fire hydrant systems: Provide an isolation valve and non-return valve.

630 INSTALLATION GENERALLY

- Fire hydrant position: Unobstructed by the parking, loading and unloading of vehicles.
- Protection: Protect from damage, e.g. by frost, traffic loads or vibration.

640 INSTALLING PIPELINES

- Depth of cover: As NJUG.
- Set out: Lay in straight lines.
- Concealment: As drawings.
- Trench excavations: Carefully prepare to a firm even base. Remove sharp objects and replace with pea gravel to give 100 mm (minimum) cover above and below the pipe.
- Installation: Thoroughly clean lengths of pipe internally before laying. Temporarily cap until jointing takes place. After laying and jointing keep leading end capped.
- Thrust blocks: Install at changes of direction and blank ends.
- Backfilling: Excavated material free from large stones and sharp objects. Leave joints exposed until after pipeline pressure test. Lay and compact in 300 mm maximum layers. Do not use heavy compactors before backfill is 600 mm deep.

650 INSTALLING UNDERGROUND FIRE HYDRANTS

- Installation: In accordance with BS 9990.
- Depth (maximum): 300 mm from hydrant outlet to finished ground level.
- Details of pit construction: Submit proposals.

660 INSTALLING SURFACE BOXES

- Clear openings: To BS 750.
- Frame depth:
  - Grade A: 100 mm.
  - Grade B: 75 mm.
- Frame width: 75 mm.
- Fit of frames and covers: Set top of cover flush with top of frame.

670 INSTALLING INDICATOR PLATES

- Aluminium plates: Aluminium alloy, zinc coated steel or copper alloy screws.
- Plastics plates: Zinc coated steel screws or adhesive.
- Ferrous plates: Zinc coated steel screws or bolts.

680 INSTALLING WARNING MARKER TAPES

- Installation: During backfilling, lay along the route of the hydrant main.
- Location, depth, colour and markings: To requirements of service undertaker.

COMPLETION

910 FLUSHING

- Operation: Fill system with water and discharge it via the hydrant. Flush out debris.

920 TESTING

- Standard: To BS 9990:2006
  - Notice before commencing testing (minimum): 1 week.
- Static pressure test: Charge the system with water twice the maximum pressure to which the installation is designed to be subjected in operation. Maintain for 1 h. During this period check that no water leaks from joints or valves.
  - Results: Submit.
- Flow test: Pass water through the system under pressure and record flow and pressure readings.
  - Timing: After static pressure test.
  - Results: Submit.

930 SYSTEM DISINFECTION

- Standard: To BS 6700.
- Certification: Submit disinfection certificate.

940 SETTING TO WORK

- Operation: Check operation of hydrant valves.
- Make ready: Check operation of frost valve and leave ready for use.

950 DOCUMENTATION

- Manufacturers' operating and maintenance instructions: Submit.
- Test records: Submit a record of inspections and tests.
- Record drawings: Submit drawings showing location of pipe runs, hydrants and valves.

960 OPERATING TOOLS

- Tools: Supply for operation, maintenance and cleaning purposes.
- Keys: Supply for hydrants.
  - Quantity: as per contract requirements.

V24 HIGH VOLTAGE CABLING

To be read with Preliminaries/ General Conditions
PRODUCTS

370 UNDERGROUND PLASTICS CABLE PROTECTION COVERS

- Manufacturer: Board's choice.
  - Product reference: Board's choice.
- Material: Polyethylene.
- Size:
  - Length: Submit proposals.
  - Width: 150 mm.
  - Thickness: Submit proposals.
- Jointing method: Peg.
- Identification: Laminate underground cable marker tape to top face.

380 UNDERGROUND CONCRETE CABLE PROTECTION COVERS

- Manufacturer: Board's choice.
  - Product reference: Board's choice.
- Standard: To BS 2484.
- Type: Flat.
- Size:
  - Length: 914 mm.
  - Width: Submit proposals.
  - Thickness at outer edge: Submit proposals.

390 PLASTICS DUCTS FOR UNDERGROUND CABLES

- Manufacturer: Board's choice.
  - Product reference: Board's choice.
- Standard: To ENA 12-24.
- Diameter (minimum): 150 mm.
- Accessories: Proprietary duct plugs.

400 UNDERGROUND CABLE MARKER TAPE

- Manufacturer: Board's choice.
  - Product reference: Board's choice.
- Standard: To ENA 12-23.

EXECUTION

620 EXCAVATIONS

- Excavations next to existing underground services: In accordance with HS(G) 47.
- Existing underground services: Expose and identify.

650 CABLES IN TRENCHES

- Base:
  - Material: All cables and ducts to be surrounded by 75 mm sand, free of any sharp stones or flints.
- Multiple cables in same trench: Set 150 mm apart.
- Cable formation within trench: Submit proposals.
- Cables below roads and hard standings: Duct and derate if longer than 10 m. Extend ducts 1m beyond hard standing.
- Cable identification and protection: Underground cable marker tape and protective covers.

670 CABLES IN DUCTS

- Cable installation from cable drums: Submit method statement.

680 PROTECTION TAPE FOR BURIED ELECTRICITY SUPPLY CABLE

- Installation: In accordance with ENA 12-23.

V32 LOW VOLTAGE CABLING

To be read with Preliminaries/General conditions.

PRODUCTS

465 UNDERGROUND CABLE MARKER TAPE

- Manufacturer: Board's choice.
  - Product reference: Board's choice.
- Material: Polyethylene.
- Size:
  - Width: 150 mm.
  - Thickness: 0.1 mm.
- Format:
  - Background colour: Yellow.
  - Text colour: Black.
- Labelling: _CAUTION ELECTRIC CABLE BELOW_ continuous along the tape length.

470 UNDERGROUND PLASTICS CABLE PROTECTION COVERS

- Manufacturer: Board's choice.
  - Product reference: Board's choice.
- Material: Polyethylene.
- Size:
  - Width: 150 mm.
  - Thickness: Submit proposals.
- Jointing method: Peg.
- Identification: Laminate underground cable marker tape to top face.

475 UNDERGROUND CONCRETE CABLE PROTECTION COVERS

- Standard: To BS 2484.
- Type: Flat.
- Manufacturer: Board's choice.
  - Product reference: Board's choice.
- Size: 914 mm.
- Width: Submit proposals.
- Thickness at outer edge: Submit proposals.

EXECUTION

680 CABLES IN TRENCHES

- Base: Newly prepared bedding.
- Multiple cables in same trench: Set 150 mm apart.
  - Cable formation within trench: Space cables apart by a distance of half the cable diameter.
- Trefoil cable groups and protective conductors: Bind at 1 m intervals.
- Cables below roads and hard standings: Install within duct and derate cable if longer than 10m. Extend ducts 1 m each side of hard standing.

- Cable identification and protection:
  - Underground plastics cable protection covers and underground cable marker tape;
  - Underground concrete cable protection covers and underground cable marker tape; and
  - Submit proposals.

700 INSTALLING CABLE DUCTS

- Routes and arrangement: As drawings.
- Duct formation within trench: Submit proposals.
- Gradient (maximum): 1:20.
- Duct bends: Suitable for cable bending radii.
- Manholes: Provide manholes, draw pits and jointing chambers.
  - Location: Submit proposals.
- Duct alignment: Check before installing cables.
- Duct cleaning: Clean duct run before installing cables.
- Draw ropes: Install draw ropes in ducts.
  - Type: Board's choice.
- Duct ends: Plug and seal with proprietary duct plugs.

710 CABLES IN DUCTS

- Cable installation from cable drums: Submit method statement.
- Single core trefoil cable groups and protective conductors: Install within a single duct and bind at 1m intervals.

Y12 MECHANICAL CLEANING AND CHEMICAL TREATMENTS

To be read with Preliminaries/ General conditions.

PRODUCTS

310 BIODISPERSANT CHEMICALS

- Manufacturer: Submit proposals.
  - Product reference: Submit proposals.
- Type: Subject to analysis.

320 CORROSION INHIBITOR CHEMICALS

- Manufacturer: Submit proposals.
  - Product reference: Submit proposals.
- Type: Subject to analysis.

330 DISPERSANT CHEMICALS

- Manufacturer: Submit proposals.
  - Product reference: Submit proposals.
- Type: Subject to analysis.

340 NON-OXIDIZING BIOCIDES

- Manufacturer: Submit proposals.
  - Product reference: Submit proposals.
- Type: Subject to analysis.

350 OXIDIZING BIOCIDES

- Manufacturer: Submit proposals.
  - Product reference: Submit proposals.
- Type: Subject to analysis.

360 PH CONTROL CHEMICALS

- Manufacturer: Submit proposals.
  - Product reference: Submit proposals.
- Type: Subject to analysis.

370 SCALE INHIBITOR CHEMICALS

- Manufacturer: Submit proposals.
  - Product reference: Submit proposals.
- Type: Subject to analysis.

EXECUTION

610 GENERALLY

- Water analysis: Analyse water samples before treatment.
- Preliminary checks: Before cleaning or chemical treatment, complete pressure tests.
- Waste products: Neutralize, and dispose of to drain.

620 FLUSHING OF HOT AND COLD WATER SYSTEMS

- Standard: To BS EN 806-4.
- Installation checks: Thoroughly inspect pipework.
- Drainage: Provide adequate drainage, preferably direct to manhole.

630 FLUSHING OF HEATING AND CHILLED WATER SYSTEMS

- Flushing: In accordance with BSRIA 1/2001.1.
- Installation checks: Thoroughly inspect pipework.
- Drainage: Provide adequate drainage, preferably direct to manhole.

640 PURGING GAS PIPEWORK

- Standards: To IGE/UP/1 and IGE/UP/1A.

650 DISINFECTION OF HOT AND COLD WATER SYSTEMS

- Standard: To BS EN 806-4.
- Samples for analysis: Provide after flushing.

660 CHEMICAL TREATMENT FOR HEATING SYSTEMS

- Treatment: In accordance with BSRIA 2/93.

670 CHEMICAL TREATMENT FOR CHILLED WATER SYSTEMS

- Treatment: In accordance with BSRIA 2/93.

700 WATER QUALITY TESTS

- Standard: To BS EN 806-4.
- Samples:
  - Sample points: Main supply to site.
  - Samples for analysis: Submit samples for bacteriological analysis.
- Water temperature: Record at each sampling point at the time of taking the sample.
- Test results:
  - Record: Details of analyses.
  - Submit: On completion.
  - Number of copies: Four.

Y50 MECHANICAL COMMISSIONING

To be read with Preliminaries/ General conditions.

EXECUTION

610 COMMISSIONING PROGRAMME

- Submission: Four weeks (minimum) before commissioning commences.
- Commissioning manager: Submit details with programme.

620 COMMISSIONING OF HOT AND COLD WATER SUPPLY SYSTEMS

- Pre-commissioning: In accordance with BSRIA 2/89.3 and CIBSE Commissioning Code W.
- Commissioning: In accordance with BS EN 806-4, BSRIA 2/89.3 and CIBSE Commissioning Code W.
- Notice (minimum): One week.
- Equipment: Check and adjust operation of equipment, controls and safety devices.
- Outlets: Check operation of outlets for satisfactory rate of flow and temperature.

630 COMMISSIONING OF WATER HEATING SYSTEMS

- Pre-commissioning: In accordance with BSRIA 2/89.3 and CIBSE Commissioning Code W.
- Commissioning: In accordance with BSRIA 2/89.3 and CIBSE Commissioning Code W.
- Variable flow systems: In accordance with CIBSE KS09 Commissioning variable flow pipework systems.
- Notice (minimum): One week.

660 COMMISSIONING OF CHILLED WATER SYSTEMS

- Pre-commissioning: In accordance with BSRIA 2/89.3 and CIBSE Commissioning Code W.
- Commissioning: In accordance with BSRIA 2/89.3 and CIBSE Commissioning Code W.
- Variable flow systems: In accordance with CIBSE KS09 Commissioning variable flow pipework systems.
- Notice (minimum): One week.

700 PERFORMANCE TESTING PROGRAMME

- Submission: Four weeks (minimum) before performance testing commences.
- Performance testing manager: Submit details with programme.

710 PERFORMANCE TESTING

- General: Demonstrate the performance of the installations.
- Guaranteed efficiency: Tolerances defined in this specification.
- Environmental tests: Carry out environmental testing. If necessary, use artificial loads to simulate operating conditions.

- Recorders:
  - Type: Supply and maintain portable seven day space temperature and relative humidity recorders, complete with charts.
  - Number: N/A.
  - Duration of loan: N/A.
- Reports: Submit on completion.

750 INSPECTION AND TEST RECORDS

- Reports:
  - Construction phase: System commissionable.
- Records for water systems: In accordance with BSRIA 2/89.3.
- Records for air systems: In accordance with BSRIA 3/89.3.
- Record sheets:
  - Submission: On completion.
  - Number of copies: Four.

760 DEMONSTRATIONS

- Running of plant:
  - Operation: Run, maintain and supervise the installations under normal working conditions.
  - Duration: Two weeks.
- Instruction: Instruct and demonstrate the purpose, function and operation of the installations.

Specification Check / Revision Sheet

Project	**RHSC and DCN Edinburgh Hospitals**	Project Number	**G1547**
Service (s)	**Mechanical & Electrical**	Sheet	**WW AP.1.2.14 SMcK G1547**
Performance Specification Title	**Medical Gas Installation**	Date	**August 2014**
Prepared By	**BR**	Checked By	**SMcK**

Revision Ref.	Date of Revision	Page N$^{o(s).}$	Revision Details	Checked By
FT	December 2013	All	Final Tender	SMcK
FC	July 2014	All	Update for Financial Close	SMcK
FC	August 2014	All	Comments Incorporated	SMcK

RHSC and DCN EDINBURGH
MEDICAL GAS INSTALLATIONS

CONTENTS

1.0	GENERAL INTRODUCTION
2.0	EXISTING SITE AND SERVICES
3.0	SCOPE
4.0	PERFORMANCE SPECIFIED SYSTEMS
5.0	SPECIFIC EXCLUSIONS
6.0	INTERFACES AND DEMARCATIONS
7.0	APPLICABLE STANDARDS
8.0	DESIGN CRITERIA
9.0	LIAISON
10.0	SYSTEM DESCRIPTION

MATERIALS AND WORKMANSHIP CLAUSES

S20	MEDICAL OXYGEN SUPPLY SYSTEMS
S21	MEDICAL NITROUS OXIDE SUPPLY SYSTEMS
S22	MEDICAL COMPRESSED AIR SUPPLY SYSTEMS
S23	MEDICAL VACUUM SYSTEMS
S25	MEDICAL ANAESTHETIC GAS SCAVENGING SYSTEMS
S29	MEDICAL GAS EQUIPMENT
S30	COMPRESSED AIR SUPPLY SYSTEMS

1.0 GENERAL INTRODUCTION

Purpose of Document

The development of the design, manufacture, supply, installation, wiring, setting to work and commissioning of the works described in this document shall be undertaken by a Medical Gas Specialist and is referred to in this document as “the Specialist”.

To carry out the development of the design, the Specialist shall obtain the necessary supporting documentation.

This specification relates to the Medical Gas Installation serving the RHSC-DCN Building.

This specification shall be read in conjunction with all other mechanical and electrical engineering services specifications and the Architectural drawings.

Motors

All motors shall be selected to provide the most energy efficient solution conforming to Section 6 regulations. All motors shall have an efficiency rating of IE2 in accordance with EN 60034-30:2009 and suitable for operation in ambient temperatures of 40 degrees C.

Description of Project

The new facility shall re-provide services from the Royal Hospital for Sick Children, Child and Adolescent Mental Health Service and the Department of Clinical Neurosciences in a single building adjoining the Royal Infirmary of Edinburgh at Little France.

The DCN part of the Facilities will have a physical link with the existing RIE Facilities specifically with the critical care unit.

The building is generally constructed from reinforced concrete.

The basement houses FM support facilities and the main building services heat distribution centres and electrical plant rooms.

Ventilation plantrooms are generally located at roof level and level 2.

A central Energy Centre shall be provided to the South of the hospital housing heating, CHP, standby generation, fuel storage and utility incomers.

2.0 EXISTING SITE AND SERVICES

The Medical Gas installation shall operate as a standalone system within the new hospitals, being self contained from other systems on the hospital site.

3.0 SCOPE

The scope of work covered by this Performance Specification shall include, but not be limited to the following:-

- Medical Gas Installation
- All associated control wiring

4.0 PERFORMANCE SPECIFIED SYSTEMS

The Medical gas installation is a performance specified system and this specification outlines the requirements to be met by the system.

5.0 SPECIFIC EXCLUSIONS

The following is specifically excluded from the scope of this performance specification:-

- Power supplies to plant
- Main cable containment (other than final run outs of conduits)
- Fire and BMS interface connections
- Supply and installation of central VIE oxygen plant

6.0 INTERFACES AND DEMARCATIONS

The Medical Gas Installation shall be provided as a complete working system serving the RHSC-DCN Building.

The new VIE plants shall be provided by the Hospital Board under their existing FM contract, with the plant being terminated with valves for extension by the Specialist.

The Specialist shall liaise with the Hospital Board to ensure coordination with the VIE supplier in terms of builders work, power supplies, connection points, etc and anything else that is required to form a complete working system.

7.0 APPLICABLE STANDARDS

All elements of the works shall be in accordance with the requirements of current legislation, regulations and industry standards unless otherwise stated.

The Medical Gas Installation shall accord with all appropriate (SHTM) Scottish Health Technical Memoranda (HTM) Health Technical Memoranda, Codes of Practice and relevant British and European Standards listed in SHTM 02-01. Any differences/conflicts in the standards shall be brought to the Board's attention and clarification sought.

In addition to the NBS clauses noted in this specification, the medical gas system shall also meet the requirement of the NHS Model Engineering Specification Part C11.

The equipment supplied shall conform with all relevant standards and regulations in force. The equipment shall be supplied with relevant Declarations of Conformity to certify compliance with the EMC directive 89/336/EEC-92/31/EEC and the Machinery Safety Directive 89/392/EEC-91/368/EEC-93/44/EEC. Also the equipment and installation shall comply with all relevant statutory requirements in force at the time:

8.0 DESIGN CRITERIA

Electricity Supply Characteristics

LV power characteristics: 400/230 V, 3-phase, 50 Hz, 230 V, 1-phase, 50 Hz.

All low current systems to be self-rebooting following mains failure and generator test conditions.

All battery systems shall be easy to test and change, it should be possible to replace the batteries without powering down or interrupting the operation of the system.

Warning shall be provided to the BMS when battery systems are failing and require maintenance replacement.

Circuits serving control panels shall be protected by MCB's not RCD's/RBCO's.

9.0 LIAISON

The Specialist shall include for liaison with:-
Health and Safety Professionals. As well as the Health and Safety requirements of this specification, the Specialist shall include for close liaison with Health and Safety professionals including the Hospital's Health and Safety Advisors and the CDM Co-ordinator and shall comply with the CDM Regulations and all Health and Safety regulations.

Other Specialist and Suppliers. The Specialist shall liase with other specialist suppliers as necessary to ensure that all interfaces between the Medical Gas Installation and other systems are allowed for. This shall include but not be limited to:-

- Building Management System specialist
- Fire Alarm and Detection specialist
- VIE Plant supplier

The Electrical Services Installer. The Specialist shall liase with the Electrical Services Installer to provide details of:-

1. Medical gas installation power supply requirements
2. Cable tray requirements

Building Control. The Specialist shall liase, with and adhere to, the requirements of the Building Control Officer.

Any other member of the Project and Board teams concerned with the planning and administration of the medical gas installation, including co-ordinating the pipework installation with all the other services.

10.0 SYSTEM DESCRIPTION

General

The Medical Gas Specialist shall provide a medical gas distribution system sized to accommodate the demand of the works as defined in the ADB Sheets, with the capacity to accommodate an increase in demand (flow and consumption) of no less than 25%;

Manifolds, vacuum and medical air plant shall have a capacity of 125% of the design capacity to allow for future expansion.

Central gas storage

A medical gas storage compound will be located adjacent to the New Energy Centre as indicated on the external services layout drawings. The compound will house the oxygen VIE plant.

The positioning of the compound provides the required safe separation distances as required by SHTM 02-01. Access for tanker deliveries will be provided so as not to cause obstruction of the roadways.

Oxygen supply plant

Oxygen will be supplied from the new VIE compound. The VIE (Vacuum Insulated Evaporator) units will be arranged as main supply.

The VIE oxygen supply equipment will be sized and installed by a specialist under direct leasing arrangements with the Hospital Board; a valved connection being left in the compound for continuation by the medical gas specialist. Indicative sizes of plant for tender purposes are shown on the External Services layouts, but these shall be confirmed by the Specialist prior to construction commencing.

From the VIE unit an oxygen supply will be taken underground to enter the new building and then connect to the oxygen ring main running at ground floor level. The ring main will connect to the major risers serving the upper floors of the RHSC-DCN Building.

An emergency bottle manifold shall be provided within the medical gas manifold store.

Manifold supplied services

Nitrous Oxide will be provided from manifold room located within the Energy Centre.

A single pipeline for each service will run from the manifold room where it will run to rise within ventilated service risers to the various departments to be served.

Laboratory Helium and Nitrogen will employ local bottled supplies due to the infrequent use of the gases.

Central compressor plants

Central Plant will be located within the Level 4 and Level 2 plant rooms as detailed below for the following systems:-

(a) ***Medical Air (4Bar)***

- The medical Air 4bar plant will be installed within the Level 4 plantroom.

Emergency reserve bottle manifold to supply each of the 4bar and 7bar plant will be installed in the central manifold room within the Energy Centre.

(b) ***Medical Vacuum***

- A vacuum plant will be installed in the Level 4 plant room.

(c) ***Surgical Air (7Bar)***

The specialist shall be responsible for the design, supply and installation of any compressed air systems necessary to serve medical equipment e.g. Theatre Pendants.

The air shall be compliant with SHTM02-01.

The compressor shall be an oil free screw type with dryer, pre-filter, final filter, condensate drain and suitably sized receiver.

The compressed air unit shall be able to be operated remotely.

The compressor unit shall be located in the Level 4 plantroom.

- All round access for maintenance.
- Good lighting levels (200 lux) for maintenance.
- A dust-free, dry, well ventilated environment.
- Operating temperatures between 10-35°C.

The pressure drop from plant to the station shall not exceed 50 kPa.

The compressed air distribution pipework shall be heavy grade steel with a flexible connection to the compressor in accordance with the standard NHS specifications.

Plant Noise

The sound pressure level within the compressor plantrooms need to be carefully considered. It is, therefore, intended that screw compressors will be used whenever possible to reduce the sound pressure levels.

Anaesthetic gas scavenging systems (AGSS)

Anaesthetic Gas Scavenging Systems will be provided for wherever Nitrous Oxide is used for anaesthetic purposes, as identified on the ADB Sheets, and pumped to local exhauster sets within the Level 4 plantroom.

AGSS exhauster pumps shall be duplex with auto-changeover and duty sharing.

AGSS systems shall generally be provided to cover the same zone areas as covered by the ventilation air handling systems.

Within the departmental areas wherever AGSS terminal outlets are provided, local starter panels with plant run/fault indications will be provided.

Terminal units

Terminal units will be single outlets, wall mounted or part of a horizontal medical trunking or part of a ceiling pendant.

Within play rooms and recreation rooms all outlets shall be located in lockable areas together with masks and flow meters, etc.

Area valve service units (AVSUs)

These will be generally located for both departmental isolation units located immediately within the department adjacent to the hospital street and local area isolation units located adjacent to nurse's stations etc.

Medical gas alarms

Medical gas alarm systems will be stand-alone systems and only give status and alarm facility to the central BMS via volt free contacts *as detailed in the BMS specification*.

All central panels will have audible and visual alarms for all remote plant conditions and visual pipeline pressure fault conditions. Repeater panels will show all the alarm conditions on the control panel.

Main alarm panels will be located in the main hospital switchboard room with a repeater panel within the Hospital Estates Facilities Management office.

At the main alarm monitoring panel and repeater panels, the pipeline status in critical care areas will also be indicated, e.g. Theatres, and Intensive Care Areas

AGSS alarms will be local to the area served.

Dental Systems

Separate compressed air and vacuum systems shall be provided for the dental room, compressor shall be located within the Level 2 plant room and vacuum supplied locally. The system shall meet the requirements of SHTM 02-01.

Pathology

Separate compressed air and vacuum systems shall be provided for the Pathology Department and shall be located within the Level 4 plant room. The system shall meet the requirements of HTM08-06.

S20 MEDICAL OXYGEN SUPPLY SYSTEMS

General

110 MEDICAL OXYGEN SUPPLY SYSTEM Serving Hospital

- Primary supply: Vacuum insulated evaporator (VIE) storage vessels.
- Secondary supply: Vacuum insulated evaporator (VIE) storage vessels.
- Reserve supply: Emergency supply manifolds.
- Pipelines: Copper to BS EN 13348, as section S29.
- Pipeline ancillaries: Line valves, as section S29.
- Zone service units: Area service module, as section S29.
- Medical gas alarms: Area, as section S29 and Central, as section S29.
- Terminal units: Required.
- Bedhead units: Refer to ADB Sheets.
- Pendants: Refer to ADB Sheets and Client Equipment Specifications.
- Completion:
  - Plant and equipment identification: As section S29.
  - Commissioning: As section S29.

System performance

210 DESIGN

- Design: Complete the design of the medical oxygen supply system in accordance with SHTM 02-01 Part A
- Proposals: Submit drawings, technical information, calculations and manufacturers' literature.

Products

310 PRODUCTS GENERALLY

- Products: In accordance with SHTM 02-01 Part A.

340 VACUUM INSULATED EVAPORATOR (VIE) STORAGE VESSELS Sited in a dedicated compound adjacent the Energy Centre.

- Type: Vertical.
- Manufacturer: submit proposals
  - Product reference: Not applicable.
- Capacity: To be advised by specialist
- Pressure (minimum): 10.5 bar (1050 kPa).
- Accessories: To be advised by specialist

360 EMERGENCY SUPPLY MANIFOLDS To support VIE Plant
- Standard: To BS EN ISO 407.
- Type: Manually adjusted regulator.
- Manufacturer: Submit proposals.
  - Product reference: Submit proposals.
- Number of cylinders: To be determined by Specialist.
- Accessories: To be determined by Specialist.

370 AREA VALVE SERVICE UNITS For use at department entrances and staff bases.
- Type: Concealed wall mounted.
- Manufacturer: Submit proposals.
  - Product reference: Submit proposals.

380 TERMINAL UNITS For all areas.
- Standard: To BS EN ISO 9170-1.
- Type:
  - Bedhead trunking mounted;
  - Boom mounted;
  - Modular wall mounted;
  - Pendant mounted; and
  - Wall mounted flush.
- Manufacturer: Submit proposals.
  - Product reference: Submit proposals.
- Accessories: To suit fixing background.

Execution

620 INSTALLATION GENERALLY
- Installation: In accordance with SHTM 02-01 Part A.

650 INSTALLING VACUUM INSULATED EVAPORATOR STORAGE VESSELS
- Location: In accordance with SHTM 02-01 Part A, figure 23.
- Installation: In accordance with British Compressed Gases Association CP 36.

660 INSTALLING COMPRESSED GAS CYLINDERS
- Location: At ground level, and close to the delivery point.
- Pressure regulating valves: Separate for each cylinder bank.

670 INSTALLING TERMINAL UNITS
- Mounting order: In accordance with SHTM 02-01 Part A, figure 1.
- Mounting heights: In accordance with SHTM 02-01 Part A, figure 2.

Completion

910 DOCUMENTATION

O&M documentation shall be issued at least three months before completion of any part of the contract.

The contents and format shall be agreed with the Board. The document shall be issued/uploaded on Aconex.

Project Co. shall provide instruction to the clients engineers and maintenance staff in the safe operation of all systems and items of equipment for an adequate and reasonable period of time based on the manufactures' recommendations and best practice. shall provide adequate and qualified staff in order to carry out their maintenance and repairs during the defects liability period.

S21 MEDICAL NITROUS OXIDE SUPPLY SYSTEMS

General

110 MEDICAL NITROUS OXIDE SUPPLY SYSTEM Serving areas of the Hospitals identified on the ADB Sheets

- Primary supply: Compressed gas cylinders.
- Secondary supply: Compressed gas cylinders.
- Reserve supply: Emergency supply manifolds.
- Pipelines: Copper to BS EN 13348, as section S29.
- Pipeline ancillaries: Line valves, as section S29.
- Zone service units: Area service module, as section S29.
- Medical gas alarms: Area, as section S29 and Central, as section S29.
- Terminal units: Required.
- Bedhead units: Refer to ADB Sheets.
- Pendants: Refer to ADB Sheets and Client Equipment Specification.
- Completion:
  - Plant and equipment identification: As section S29.
  - Commissioning: As section S29.

210 DESIGN

- Design: Complete the design of the medical nitrous oxide supply system in accordance with SHTM 02-01 Part A.
- Proposals: Submit drawings, technical information, calculations and manufacturers' literature.

Products

310 PRODUCTS GENERALLY

- Products: In accordance with SHTM 02-01 Part A

320 COMPRESSED GAS CYLINDERS for Hospitals

- Standard: To BS EN ISO 407.
- Type: Automatic changeover.
- Manufacturer: Submit proposals.
  - Product reference: Submit proposals.
- Number of cylinders: To be determined by Specialist.
- Accessories: Manifold control systems.

330 EMERGENCY SUPPLY MANIFOLDS for Hospitals

- Standard: To BS EN ISO 407.
- Type: Manually adjusted regulator.
- Manufacturer: Submit proposals.
  - Product reference: Submit proposals.
- Number of cylinders: To be determined by Specialist.
- Accessories: To be determined by Specialist.

340 AREA VALVE SERVICE UNITS At department entrances, theatre entrances and staff bases

- Type: Concealed wall mounted.
- Manufacturer: Submit proposals.
  - Product reference: Submit proposals.

350 TERMINAL UNITS For all areas

- Standard: To BS EN ISO 9170-1.
- Type:
  - Bedhead trunking mounted;
  - Boom mounted;
  - Modular wall mounted;
  - Pendent mounted; and
  - Wall mounted flush.
- Manufacturer: Submit proposals.
  - Product reference: Submit proposals.
- Accessories: To suit fixing background.

Execution

620 INSTALLATION GENERALLY

- Installation: In accordance with SHTM 02-01 Part A.

630 INSTALLING COMPRESSED GAS CYLINDERS

- Location: At ground level, and close to the delivery point.
- Pressure regulating valves: Separate valves for each cylinder bank.

640 INSTALLING TERMINAL UNITS

- Mounting order: In accordance with SHTM 02-01 Part A, figure 1.
- Mounting heights: In accordance with SHTM 02-01 Part A, figure 2.

Completion

910 DOCUMENTATION

O&M documentation shall be issued at least three months before completion of any part of the contract.
The contents and format shall be agreed with the Board. The document shall be issued/uploaded on Acconex.

Project Co. shall provide instruction to the clients engineers and maintenance staff in the safe operation of all systems and items of equipment for an adequate and reasonable period of time based on the manufactures' recommendations and best practice. Project Co. shall provide adequate and qualified staff in order to carry out their maintenance and repairs during the defects liability period.

S22 MEDICAL COMPRESSED AIR SUPPLY SYSTEMS

General

110 MEDICAL COMPRESSED AIR SUPPLY SYSTEM Serving the hospitals

- Primary supply: Compressors.
- Secondary supply: Compressed gas cylinders.
- Reserve supply: Emergency supply manifolds.
- Pipelines: Copper to BS EN 13348, as section S29.
- Pipeline ancillaries: Line valves, as section S29.
- Pressure reducing stations: Duplex.

- Zone service units: Area service module, as section S29.
- Medical gas alarms: Area, as section S29 and Central, as section S29.
- Terminal units: Required.
- Bedhead units: Refer to ADB Sheets.
- Pendants: Refer to ADB Sheets and Client Equipment Specification.
- Completion:
  - Plant and equipment identification: As section S29.
  - Commissioning: As section S29.

System performance

210 DESIGN

- Design: Complete the design of the medical compressed air supply system in accordance with SHTM 02-01 Part A.
- Proposals: Submit drawings, technical information, calculations and manufacturers' literature.

Products

310 PRODUCTS GENERALLY

- Products: In accordance with SHTM 02-01 Part A.

320 COMPRESSORS For all areas

- Pressure: 1100 kPa.
- Type: Quadruplex (4Bar Air), twin (7Bar Air)
- Manufacturer: Submit proposals.
  - Product reference: Submit proposals.
- Compressor: Rotary screw.
- Flow rate: To be determined by Specialist.
- Number of vessels: To be determined by Specialist.
  - Total vessel capacity: To be determined by Specialist.
- Electrical supply type: Three phase.
- Accessories: To be determined by Specialist.

330 COMPRESSED GAS CYLINDERS For emergency reserve

- Standard: To BS EN ISO 407.
- Type: Automatic changeover.
- Manufacturer: Submit proposals.
  - Product reference: Submit proposals.
- Number of cylinders: To be determined by Specialist.
- Accessories: Manifold control systems.

340 EMERGENCY SUPPLY MANIFOLDS In association with compressor plant.

- Standard: To BS EN ISO 407.
- Type: Manually adjusted regulator.
- Manufacturer: Submit proposals.
  - Product reference: Submit proposals.

  Number of cylinders: To be determined by Specialist.
- Accessories: To be determined by Specialist.

350 PRESSURE REDUCING STATIONS as required to suit Specialist's design

- Manufacturer: Submit proposals.
  - Product reference: Submit proposals.
- Accessories: Pressure relief valves, pressure gauges and quarter turn ball valves.

360 AREA VALVE SERVICE UNITS At department entrances and staff bases

- Type: Concealed wall mounted.

Manufacturer: Submit proposals.

- Product reference: Submit proposals.

370 TERMINAL UNITS For all areas

- Standard: To BS EN ISO 9170-1.
- Type:
  - Bedhead trunking mounted;
  - Boom mounted;
  - Modular wall mounted;
  - Pendent mounted; and
  - Wall mounted flush.
- Manufacturer: Submit proposals.
  - Product reference: Submit proposals.
- Accessories: To suit fixing background.

Execution

620 INSTALLATION GENERALLY

- Installation: In accordance with SHTM 02-01 Part A.

630 INSTALLING COMPRESSORS

- Location: Site to allow adequate flow of air for:
  - air intake to the compressors;
  - cooling of the compressed air by the after-coolers; and
  - cooling of the compressors.
- Air inlets: To be determined by Specialist.

640 INSTALLING COMPRESSED GAS CYLINDERS

- Location: At ground level, and close to the delivery point.
- Pressure regulating valves: Separate valves for each cylinder bank.

650 INSTALLING TERMINAL UNITS

- Mounting order: In accordance with SHTM 02-01 Part A, figure 1.
- Mounting heights: In accordance with SHTM 02-01 Part A, figure 2.

Completion

910 DOCUMENTATION

O&M documentation shall be issued at least three months before completion of any part of the contract.
The contents and format shall be agreed with the Board. The document shall be issued/uploaded on Aconex.

Project Co. shall provide instruction to the clients engineers and maintenance staff in the safe operation of all systems and items of equipment for an adequate and reasonable period of time based on the manufactures' recommendations and best practice. Project Co. shall provide adequate and qualified staff in order to carry out their maintenance and repairs during the defects liability period.

S23 MEDICAL VACUUM SYSTEMS

General

110 MEDICAL VACUUM SYSTEM Serving the hospitals

- Primary supply: Medical vacuum plant.
- Pipelines: Copper to BS EN 13348, as section S29.
- Pipeline ancillaries: Line valves, as section S29.
- Zone service units: Area service module, as section S29.
- Medical gas alarms: Area, as section S29 and Central, as section S29.
- Terminal units: Required.
- Bedhead units: Refer to ADB Sheets.
- Pendants: Refer to ADB Sheets and Client Equipment Specification.
- Completion:
  - Plant and equipment identification: As section S29.
  - Commissioning: As section S29.

System performance

210 DESIGN

- Design: Complete the design of the medical vacuum system in accordance with SHTM 02-01 Part A.
- Proposals: Submit drawings, technical information, calculations and manufacturers' literature.

Products

310 PRODUCTS GENERALLY

- Products: In accordance with SHTM 02-01 Part A.

320 MEDICAL VACUUM PLANT Serving the hospitals.

- Type: Quadruplex
- Manufacturer: Submit proposals.
  - Product reference: Submit proposals.
- Number of vacuum receiver vessels: To be determined by the Specialist.
- Number of pumps: To be determined by the Specialist.
- Number of motor control units: To be determined by the Specialist.
- Electrical supply type: Three phase.
- Accessories: Central control unit.
  - Other accessories: To be determined by the Specialist.

330 AREA VALVE SERVICE UNITS At department entrances and staff bases.

- Type: Concealed wall mounted.
- Manufacturer: Submit proposals.
  - Product reference: Submit proposals.

340 TERMINAL UNITS For all areas.

- Standard: To BS EN ISO 9170-1.
- Type:
  - Bedhead trunking mounted;
  - Boom mounted;
  - Modular wall mounted;
  - Pendent mounted; and
  - Wall mounted flush.
- Manufacturer: Submit proposals.
  - Product reference: Submit proposals.
- Accessories: To suit fixing background.

Execution

620 INSTALLATION GENERALLY

- Installation: In accordance with SHTM 02-01 Part A.

630 INSTALLING MEDICAL VACUUM PLANT

- Vacuum plant exhaust: Clear of windows, ventilation intakes and the intake of air compressors.
- Notice at discharge points: Weatherproof, stating 'MEDICAL VACUUM DISCHARGE

POINT - DO NOT OBSTRUCT'.

640 INSTALLING TERMINAL UNITS

- Mounting order: In accordance with SHTM 02-01 Part A, figure 1.
- Mounting heights: In accordance with SHTM 02-01 Part A, figure 2.

Completion

910 DOCUMENTATION

O&M documentation shall be issued at least three months before completion of any part of the contract.
The contents and format shall be agreed with the Board. The document shall be issued/uploaded on Acconex.

Project Co. shall provide instruction to the clients engineers and maintenance staff in the safe operation of all systems and items of equipment for an adequate and reasonable period of time based on the manufactures' recommendations and best practice. Project Co. shall provide adequate and qualified staff in order to carry out their maintenance and repairs during the defects liability period.

S25 MEDICAL ANAESTHETIC GAS SCAVENGING SYSTEMS

General

110 MEDICAL ANAESTHETIC GAS SCAVENGING SYSTEM Serving the hospitals
- Exhauster units: Required.
- Pipelines: Copper to BS EN 13348, as section S29.
- Pipeline ancillaries: Line valves, as section S29.
- Terminal units: Required.
- Remote start switch panels: Required.
- Vacuum flow regulating valves: Required.
- Bedhead units: Refer to ADB Sheets.
- Pendants: Refer to ADB Sheets and Client Equipment Specification.
- Completion:
  - Plant and equipment identification: As section S29.
  - Commissioning: As section S29.

System performance

210 DESIGN
- Design: Complete the design of the medical anaesthetic gas scavenging system in accordance with SHTM 02-01 Part A.
- Proposals: Submit drawings, technical information, calculations and manufacturers' literature.

Products

310 PRODUCTS GENERALLY
- Products: In accordance with SHTM 02-01 Part A.

320 EXHAUSTER UNITS Serving the hospitals
- Standard: To BS EN ISO 7396-2.
- Type: Duplex.
- Manufacturer: Submit proposals.
  - Product reference: Submit proposals.
- Electric supply: Three phase.
- Integral accessories: Flexible connectors, moisture drain flask and starter isolator panel.
- Other accessories: Pressure switch.

330 TERMINAL UNITS For all areas.
- Standard: To BS EN ISO 9170-2.
- Type:
  - Bedhead trunking mounted;
  - Boom mounted;
  - Modular wall mounted;
  - Pendent mounted; and
  - Wall mounted flush.
- Manufacturer: Submit proposals.
  - Product reference: Submit proposals.
- Orifices: To be determined by Specialist.
- Accessories: To suit fixing background.

340 REMOTE START SWITCH PANELS Located in areas served by the systems

- Standard: To BS EN ISO 7396-2.
- Type: Double pole rocker switch, green NORMAL indicator, amber PLANT FAULT indicator and red PLANT EMERGENCY indicator.
- Manufacturer: Submit proposals.
  - Product reference: Submit proposals.
- Electric supply: 24 V.
- Accessories: To be determined by the Specialist.

350 VACUUM FLOW REGULATING VALVES To systems served

- Standard: To BS EN 737-2.
- Type: To be determined by Specialist.
- Manufacturer: Submit proposals.
  - Product reference: Submit proposals.
- Accessories: To be determined by the Specialist.

Execution

620 INSTALLATION GENERALLY

- Standard: To BS EN ISO 7396-2 and in accordance with SHTM 02-01 Part A.

630 INSTALLING EXHAUSTER UNITS

- Discharge outlet: At roof level, clear of ventilation inlets, opening windows and apertures.

640 INSTALLING REMOTE START SWITCH PANELS

- Location: Refer to ADB Sheets and discuss/agree with the Users.

650 INSTALLING TERMINAL UNITS

- Mounting heights: In accordance with SHTM 02-01 Part A, figure 2.

Completion

910 DOCUMENTATION

O&M documentation shall be issued at least three months before completion of any part of the contract.
The contents and format shall be agreed with the Board. The document shall be issued/uploaded on Aconex.

Project Co. shall provide instruction to the clients engineers and maintenance staff in the safe operation of all systems and items of equipment for an adequate and reasonable period of time based on the manufactures' recommendations and best practice. Project Co. shall provide adequate and qualified staff in order to carry out their maintenance and repairs during the defects liability period.

S29 MEDICAL GAS EQUIPMENT

Products

310 PRODUCTS GENERALLY
- Products: In accordance with SHTM 02-01 Part A.

320 AREA SERVICE MODULES Located at department entrances and staff bases.
- Type: Recessed.
- Manufacturer: Submit proposals.
  - Product reference: Submit proposals.
- Number of area valve service units: Refer to layout drawings.
- Integral medical gas area alarm: Required.
- Panel colour: Submit proposals.

330 MEDICAL GAS AREA ALARMS Associated with areas served by medical gases.
- Type: Concealed.
- Manufacturer: Submit proposals.
  - Product reference: Submit proposals.
- Accessories: Bezel for concealed installation and Pressure switch assemblies.

340 MEDICAL GAS CENTRAL ALARMS Associated with central plant items.
- Type: Concealed.
- Manufacturer: Submit proposals.
  - Product reference: Submit proposals.
- Accessories: Bezel for concealed installation.

420 COPPER TUBES
- Standard: To BS EN 13348.
  - Up to 54 mm R250.
  - 76 mm and above R290.
- Fittings: To BS EN 1254-1.

430 LINE VALVES For section and plant isolation
- Standards: To BS EN ISO 7396-1 and in accordance with SHTM 02-01 Part A.
- Type: Ball valve.
- Manufacturer: Submit proposals.
  - Product reference: Submit proposals.
- Connections: Submit proposals.
- Integral accessories: Copper stub pipes, padlock.

Execution

610 INSTALLATION GENERALLY
- Installation: In accordance with SHTM 02-01 Part A

630 INSTALLING AREA ALARMS
- Location: Downstream of the area valve service units.

640 INSTALLING CENTRAL ALARMS

- Location:
  - Facilities management office
  - ITU nurses station
  - Telephone switchboard
  - Operating room
  - Theatre managers desk
  - 24 hour manned FM facility

680 PLANT AND EQUIPMENT IDENTIFICATION

- Identification: In accordance with SHTM 02-01 Part A

Completion

910 COMMISSIONING OF MEDICAL GAS SYSTEMS

- Commissioning: In accordance with SHTM 02-01 Part A.
- Notice (minimum): To be agreed with the Board.

920 INSPECTION AND TEST RECORDS

- Records for medical gas systems: In accordance with SHTM 02-01 Part A
- Record sheets: Submit.
  - Number of copies: To be agreed with the Board.

S30 COMPRESSED AIR SUPPLY SYSTEMS

General

110 COMPRESSED AIR SUPPLY SYSTEM Serving specialist systems and equipment

- Manufacturer: Submit proposals.
- Source supply: Compressors.
- Pipelines: Copper.
- Pipeline ancillaries: To be determined by the Specialist.
- Pressure reducing stations: To be determined by the Specialist.
- Air receivers: To be determined by the Specialist.
- Dryers: To be determined by the Specialist.
- In line filters: To be determined by the Specialist.
- Aftercoolers: To be determined by the Specialist.
- Oil/ water separators: To be determined by the Specialist.
- Couplings: To be determined by the Specialist.
- Completion:
  - Plant and equipment identification: As section Y32.

System performance

210 DESIGN
Design: Complete the design of the compressed air supply system.
Proposals: Submit drawings, technical information, calculations and manufacturers' literature.

Products

310 COMPRESSORS Serving the compressed air system

- Pressure: To be determined by the Specialist.
- Type: Duplex.
- Manufacturer: Submit proposals.
  - Product reference: Submit proposals.
- Compressor: Oil free.
- Flow rate: To be determined by the Specialist.
- Number of vessels: To be determined by the Specialist.
  - Total vessel capacity: To be determined by the Specialist.
- Electrical supply type: Three phase.
- Accessories: To be determined by the Specialist.

Execution

620 INSTALLING COMPRESSORS

- Location: Site to allow adequate flow of air for
  - air intake to the compressors;
  - cooling of the compressed air by the after-coolers; and
  - cooling of the compressors.
- Air inlets: Fit filters to the compressor inlets or inlet ductwork.

Completion

905 TESTING AND COMMISSIONING

- Requirements: To be determined by the Specialist.

910 DOCUMENTATION

O&M documentation shall be issued at least three months before completion of any part of the contract.
The contents and format shall be agreed with the Board. The document shall be issued/ uploaded on Aconex.

Project Co. shall provide instruction to the clients engineers and maintenance staff in the safe operation of all systems and items of equipment for an adequate and reasonable period of time based on the manufactures' recommendations and best practice. Project Co. shall provide adequate and qualified staff in order to carry out their maintenance and repairs during the defects liability period.

Specification Check / Revision Sheet

Project	**RHSC-DCN Edinburgh Hospitals**	Project Number	**G1547**
Service (s)	**Mechanical**	Sheet	**WW AP.1.2.15 SMcK G1547**
Performance Specification Title	**Pneumatic Tube Transfer System**	Date	**August 2014**
Prepared By	**BR**	Checked By	**SMcK**

Revision Ref.	Date of Revision	Page N$^{o(s).}$	Revision Details	Checked By
FT	December 2013	All	Final Tender	SMcK
FC	July 2014	All	Update for Financial Closure	SMcK
FC	August 2014	All	Comments Incorporated	SMcK

RHSC and DCN EDINBURGH
PNEUMATIC TUBE SYSTEMS

CONTENTS

1.0 GENERAL INTRODUCTION

2.0 EXISTING SITE AND SERVICES

3.0 SCOPE

4.0 PERFORMANCE SPECIFIED SYSTEMS

5.0 SPECIFIC EXCLUSIONS

6.0 INTERFACES AND DEMARCATIONS

7.0 APPLICABLE STANDARDS

8.0 DESIGN CRITERIA

9.0 LIAISON

10.0 SYSTEM DESCRIPTION

MATERIALS AND WORKMANSHIP CLAUSES

X31 PNEUMATIC TUBE TRANSPORTATION SYSTEM

1.0 GENERAL INTRODUCTION

Purpose of Document

The development of the design, manufacture, supply, installation, wiring, setting to work and commissioning of the works described in this document shall be undertaken by the Specialist Installer and is referred to in this document as “the Specialist”.

To carry out the development of the design, the Specialist shall obtain the necessary supporting documentation.

This specification relates to the Pneumatic Tube Transportation System (PTS) serving the new RHSC-DCN facility.

This specification shall be read in conjunction with all other mechanical and electrical engineering services specifications and the Architectural drawings.

Description of Project

The new facility shall re-provide services from the Royal Hospital for Sick Children, Child and Adolescent Mental Health Service and the Department of Clinical Neurosciences in a single building adjoining the Royal Infirmary of Edinburgh at Little France.

The DCN part of the Facilities will have a physical link with the existing RIE Facilities specifically with the critical care unit.

The building is generally constructed from reinforced concrete.

The basement houses FM support facilities and the main building services heat distribution centres and electrical plant rooms.

Ventilation plantrooms are generally located at roof level and level 2.

A central Energy Centre shall be provided to the South of the hospital housing heating, CHP, standby generation, fuel storage and utility incomers.

Motors

All motors shall be selected to provide the most energy efficient solution conforming to Section 6 regulations. All motors shall have an efficiency rating of IE2 in accordance with EN 60034-30:2009 and suitable for operation in ambient temperatures of 40 degrees C.

2.0 EXISTING SITE AND SERVICES

The PTS shall interconnect with existing facilities on the hospital site. The PTS specialist shall liaise with the Hospital Board to agreed suitable points of interface whilst causing minimum disruption to the operation of the hospitals.

3.0 SCOPE

The scope of work covered by this Performance Specification shall include, but not be limited to the following:-

- Pneumatic tube conveying system
- All associated control wiring

4.0 PERFORMANCE SPECIFIED SYSTEMS

The PTS is a performance specified system and this specification outlines the requirements to be met by the system.

5.0 SPECIFIC EXCLUSIONS

The following is specifically excluded from the scope of this Performance Specification:-

- Power wiring to plant
- Main cable containment (other than final run outs of conduits)
- Fire and BMS interface connections

6.0 INTERFACES AND DEMARCATIONS

The PTS shall be provided as a complete working system serving the new RHSC – DCN Building and be as detailed within the Table below. Allowance shall be made for interface with other parts of the hospital site, with direct connection to deliver to and receive from the Pharmacy and Laboratories rooms S6107 & GS119 within the RIE.

The PTS supplier shall provide information to other parties for power supplies and fire alarm system interfaces.

Ref	Department	Pneumatic Air Tube Delivery System Required and Number	Location
RHSC SPECIFIC DEPARTMENTS			
A	**Front Door – ED/ Assessment Ward**		
A1	Emergency Department	2	1 Laboratory Area and 1 outside Resuscitation Room
A2	Paediatric Acute Receiving Unit – 34 Beds	1	Central Location Staff Base
B	**Critical Care/ HDU/ Neonatal Surgery**		
B1	PICU and HDU's – 24 Beds	2	1 close to Room 5/8 and the other close to Room 14

Ref	Department	Pneumatic Air Tube Delivery System Required and Number	Location
C	**RHSC In Patient Pathway/ Ward Care**		
C1.1	Medical Inpatients – 23 Beds	1	Staff Base Central Location
C1.2	Surgical Long Stay Inpatients – 15 Beds	1	Staff Base Central Location
C1.3	Neuroscience Inpatients – 12 Beds	1	Staff Base Central Location
C1.4	Haematology/ Oncology Inpatients & Daycases – 17 Beds & 2 Chairs	1	Staff Base Central Location
C1.8	Surgical Short Stay Inpatients – 14 Beds	1	Staff Base Central Location
C1.9	Inborn Metabolic Disorders Lab	1	
D	**RHSC Ambulatory Care**		
D1	RHSC Main Outpatients	2-(1 Ground Level 1 First Level)	In corridor In the D1 Area Reception Area
D9	Medical Day Care Unit – 5 Beds	1	Reception Area
H	**Academic**		
H2	Clinical Research Facility	1	Close to reception area
DCN SPECIFIC DEPARTMENTS			
L	**DCN In Patient Pathway/ Ward Care**		
L1	DCN Acute Care – 24 Beds	1	Staff Base closest to Resuscitation Room
L2	DCN Inpatients – 43 Beds	1	Near to MD Staff Office closest to PIU
M	**DCN Out Patient Departments**		
M1	DCN Outpatients	1	Reception Area
JOINT DEPARTMENTS			
P	**Combined Theatres**		
P1	Operating Theatres & RHSC Surgical Day Case Unit	2	1 location close to reception area in DCN & RHSC end.
Q	**Combined Radiology**		
Q1	Radiology	1	Located close to DCN Reception Area

7.0 APPLICABLE STANDARDS

All elements of the works shall be in accordance with SHTM 08-04 Pneumatic Tube Transport Systems and the requirements of current legislation, regulations and industry standards unless otherwise stated.

The Fire Protection Systems shall accord with all appropriate Scottish Health Technical Memoranda, Codes of Practice and relevant British and European Standards listed in SHTM 08-04.

The equipment supplied shall conform with all relevant standards and regulations in force. The equipment shall be supplied with relevant Declarations of Conformity to certify compliance with the EMC directive 89/336/EEC-92/31/EEC and the Machinery Safety Directive 89/392/EEC-91/368/EEC-93/44/EEC. Also the equipment and installation shall comply with all relevant statutory requirements in force at the time:

8.0 DESIGN CRITERIA

Electricity Supply Characteristics

LV power characteristics: 400/230 V, 3-phase, 50 Hz, 230 V, 1-phase, 50 Hz.

9.0 LIAISON

The Specialist shall include for liaison with:-

Health and Safety Professionals. As well as the Health and Safety requirements of this specification, the Specialist shall include for close liaison with Health and Safety professionals including the Hospital's Health and Safety Advisors and the CDM Co-ordinator and shall comply with the CDM Regulations and all Health and Safety regulations.

Other Specialist. The Specialist shall liase with other specialist as necessary to ensure that all interfaces between the Fire Detection and Alarm System and other systems are allowed for. This shall include but not be limited to:-

- Building Management System specialist
- Fire Alarm and Detection specialist
- Security systems specialist

The Electrical Services Installer. The Specialist shall liase with the Electrical Services Installer to provide details of:-

3. PTS power supply requirements
4. Cable tray requirements

Building Control. The Specialist shall liase, with and adhere to, the requirements of the Building Control Officer.
Any other member of the Project and Board teams concerned with the planning and administration of the PTS.

10.0 SYSTEM DESCRIPTION

General

A PC controlled 160mm diameter pneumatic tube system (PTS) shall be installed in the RHSC-DCN with links to the existing building via the corridor link facility building.

The system shall be capable of transporting various liquids, solids and documents up to a load of 5kg at a speed of 5-6m/s. The system shall be capable of transporting all the items advised within a specified time limit. The overall performance and percentage usage of the systems capacity during a normal working day shall be demonstrated using a real-time simulation model if required.

The system shall be capable of supporting 21 transactions per hour not including the return of the capsules. The system shall have a 70% maximum system capacity.

A front end PC shall be provided complete with dedicated printer and web link for remote operation and analysis.

The system shall incorporate an advanced platform software control package with full automatic dual control redundancy to provide optimal flexibility, performance and convenience in the management and maintenance of the pneumatic tube system.

The controller shall have battery backup for system memory and status, and be capable of being remotely controlled through the PC.

The equipment shall be supplied and installed in accordance with SHTM 08-04, utilising optical carrier detectors, safety extra low voltage cabling to the stations, electronic positioning sensors, volt free contacts for BMS alarm status and fire alarm interface at the controller.

Configuration

The pneumatic tube system network shall consist of several individual zones or systems. It is a requirement that full intercommunication shall be possible between all zones and systems.

The equipment shall be configurable in any appropriate manner, and shall not be restricted to a single hub or interchange. The software shall be capable of allowing several interchanges to exist in a single network, and allow link-chaining of systems to allow carriers to be transferred between several systems between sender and receiver.

Where networks are configured to provide alternative routes between locations, the software shall intelligently decide the most appropriate route depending on operational circumstances.

Express (Power) Lines

Where destinations are more than 250m apart, the equipment shall be capable of incorporating “express” or “power” lines capable of transporting several carriers simultaneously in a single tube. These special systems shall be configured between transfer units or interchanges, or alternatively terminate directly at a station.

Stations

The stations shall generally be of front-loading design of the fully recessed pattern with a wipeable membrane type keypad. All connecting tubing and cables shall be concealed behind removable panelling.

A ‘spare carrier’ rack holding up to four carriers shall be wall mounted adjacent to the station.

The stations are to be designed to comply with the latest Health & Safety Regulations. Access to the station mechanism is to be protected by an electronically controlled opening/closing guard door with full mechanical interlock.

The stations in-built LCD display shall show:

Time and date
Carrier destination
The station the last carrier arrived from
Station status - ready, selection OK, out of use, maintenance, faulty, basket full, invalid address and purge.
The display shall also have a directory of all system station names and numerical addresses.

The stations indicators display shall show:

- A text message to prompt the user to enter the destination address.
- Text messages providing context sensitive operational guidance.
- Entered destinations shall display departmental names as well as numeric addresses.
- Ability to look up addresses on an in-built directory.
- Display of appropriate information messages.
- When appropriate, display that the station is out of use or on divert.
- Display a list of recently received carriers including carrier ID numbers.
- Display a list of recently dispatched carriers including carrier ID numbers.
- Display appropriate operational instructions when remote signal devices are used.

Stations shall be fully automatic and capable of accepting a carrier when another carrier is incoming to that station.

Destinations shall be addressed by the use of the 4 digit number or by accessing the station name through the directory.

Destinations may be restricted if required.

The destination setting can be optionally set to return to 1 of 3 settings after carrier has been sent:

Force new address input
Default to a pre-set address
Default to “last number re-dial”

Wrongly addressed carriers shall not be accepted by the system. A code reader at the station shall allow only carriers to be introduced into the system, e.g. objects such as cans shall not be accepted.

Incoming carriers shall be able to be re-directed to another station.

All stations shall be fitted with air control to ensure carrier soft arrival. This system shall provide total safety of even delicate glass samples.

The station shall automatically clear and eject a blocked carrier exit by agitating the station mechanism.

The station shall be set to automatically return a carrier to the station from where it has been received by use of a single keystroke.

Carriers shall be received into a basket with the exception of the station at the Reception desk, which shall be a cabinet. The cabinet shall have the ability to retain arriving carriers within the station which may only be released by PIN entry via the keypad, and the ability to secure the station against unauthorized use via a PIN code entered via the keypad Arrival signal units shall be able to be programmed to discriminate to different user addresses, thereby allowing urgent full carriers to be immediately notified to the user, whilst allowing no alarm for empty returns.

The use of the station shall be restricted by a user identifiable touch key and security card.

The station shall include an in-built carrier arrival indicator consisting of a warning bleep and light. The bleep is to be enabled or disabled as required at the station by the user.

Remote indicators shall be provided in some locations to indicate the arrival of a carrier at the station, as indicated in the schedule. The remote signal devices shall be configurable to sound different bleep patterns for different addresses to discriminate for priority arrivals. These are generally from the Clean Utility Rooms to the appropriate Staff Base and indicated on the Nurse Call Panel.

Carriers

Carriers shall be capable of carrying specimens, blood bags, medications and documents and shall be manufactured from transparent high impact resistant plastic material. Both ends shall have caps with “flip-swivel lids” and self-latching feature, preventing cap from opening during transportation inside the tubing. Carriers shall not have any metallic components.

Velcro type wear bands on both caps shall provide smooth travel and noise reduction. Each cap shall incorporate an elastic rubber bumper on the outside end for impact reduction.

Carriers shall be fitted with an RFID transponder in both ends of the carrier to avoid operators having to turn carriers during dispatch operation.

The following carriers shall be provided:

- 5 No. carriers per station
- 1 No. special cleaning carrier for dispersing cleaning agent throughout the system in the event of a spillage

Carriers shall be leak resistant to avoid the spillage of fluids outside of the carrier within the tube in the event of a breakage. Each carrier shall come complete with transponder technology that allows automatic redistribution and allow only correct carriers to be sent from any station.

Carriers shall be secured during both the send and receive operations.

Carriers & RFID

Every carrier shall be fitted with a RFID (radio frequency identification) transponder that uniquely identifies it.

Every station shall be fitted with a transponder reader so that the identity and location of every carrier is recorded on every transaction.

RFID shall enable the carrier to be individually identified on each transaction so that the following functionality is included as a minimum:-

- Automatically send the carrier to a carrier specific destination (e.g auto return to home location).
- Automatically send the carrier to a station specific destination (e.g auto send this carrier to A/E).
- Invoke a carrier specific priority.
- Prevent the carrier being sent to prohibited destinations. (e.g. prohibit Pharmacy carriers from being dispatched to laboratories).
- Automatically distribute the carrier according to station stock levels.
- Automatically remove the carrier from service after a pre-set number of transactions for cleaning/service.
- Re-allocate stock levels when auto-distribution is in use so that “walked” carriers are correctly accounted for without manual resetting of stock allocations.
- Identify the location of any specific carrier at any time.
- Prevent the dispatch of non-carriers (spurious payloads)

Main Control Unit.

The main control system shall incorporate the following features as a minimum:-

- Be a dedicated standard PC.
- The control software shall be installed onto Windows 7 operating system.
- The pneumatic tube system hardware shall be connected via the industry standard USB interface
- A back-up PC may be supplied so that the control PC may be quickly swapped by unplugging and re-plugging the USB interface. The back-up PC shall be pre-configured with all relevant software as a duplicate to the main PC.
- The control PC shall be configurable so that it may be accessed remotely either:- i) Through connection to a local network, or ii) via direct connection to the internet so that all PC functionality is available from several remote locations as required.
- The control PC shall be fitted with a UPS.

Control Software

The control software shall provide the following features as a minimum:-

- Automatic start up after power is switched on.
- Automatic recovery after power is restored from a failure such that all transactions are resumed.
- Overview of all operations in progress showing sending and receiving destinations, order time, transaction start time, transaction ID number, carrier ID number.
- Any systems/units in error or fault status shall be highlighted in a different colour to the rest of the display.
- Ability to allocate default (reject) stations at any location on the network, so that initially, in the case of error, delivery is attempted to a single location on the network. Secondary reject stations within individual zones and systems shall be available in case the single primary location is unobtainable.
- Automatic initiation of clearing (purge, freerun) cycles in case of error.
- Ability to initiate a manual clearing cycle (purge, freerun) selectable by individual station, individual zone or system or globally for the whole network.
- Ability to allocate priorities to individual stations, addresses and carriers as required.
- Timetable feature programmable for different times, days of the week, and holidays, so that priorities, diverting of transactions and enabling/disabling of stations may be carried out according to a predetermined schedule.
- The ability to make individual stations and/or addresses “invisible” so that they don’t appear on directories, to protect special stations and/or priorities from abuse.
- Password protected access to any service areas of the control software where configuration data may be entered.
- Individual remote control and monitoring of all elements of the network including e.g. station motors, switches, displays such that the whole network may be manipulated via the central PC control if required.

- A database of carriers available for use on the network which records: the number of transactions each carrier has made; the location of each individual carrier; the actual stock level of carriers at each station compared to the required stock.
- Provide connection facilities to fire alarms so that the system shuts down in the case of an alarm.
- Provide the facility for data exchange with BMS systems using an industry standard OPC interface so that individual and independent operation and fault signals can be transmitted if required.
- Provide the ability to freeze operation of the whole network in an emergency, stopping all operation.
- Provide a carrier stock control and management system so that each station may be allocated a specific stock of carriers that is replenished automatically according to demand using an automatic re-distribution feature. The transponder functionality shall ensure that stocks are automatically re-allocated if a carrier is “walked” between locations.
- The control software shall be automatically backed up.
- Configuration and data logs shall be transportable as a single back-up file.
- Provide the (optional) facility to broadcast operational and error status via email, SMS, pager, as required. This facility shall be configurable so that either all or only selective messages may be broadcast.

Management and Monitoring Software.

The installation shall be provided with a management and monitoring software application to allow analysis and audit of both active and historical transactions. The management software shall include the following features as a minimum:-

- Real time graphic schematic of the various systems and zones of the network showing transactions in progress in a graphical format.
- Real time floor plan graphic showing the locations of stations and diverters on individual floor plan “maps” so that the physical location of any unit in operation or fault may be easily identified.
- Carrier ID information for each station showing:- carriers recently dispatched; carriers recently received; carrier IDs of carriers currently at that station; present location of carriers allocated to that station.
- Presentation and print of textual and graphical information extracted from the transaction log. The software shall have the ability to filter by time, date, route, errors. It shall also be capable of displaying the efficiency of individual zones or systems and shall clearly identify the waiting time (queuing time), total transaction time, and transfer time for each transaction.

Error Management

The following features shall be included as a minimum:-

- Errors shall be recorded in text format in the transaction log.
- All errors shall be searchable using error type filters.
- A graphical representation shall be available showing the frequency of errors for specific time periods.

- A system in fault shall be highlighted in a different colour to systems in normal operation.
- Within the device directory the device(unit) in fault shall be highlighted in a different colour to stations in normal operation.
- Optionally, specific station/zone/network faults shall be capable of being notified via a remote alarm connected to any station on the network.

Optionally specific fault notification shall be capable of broadcast via email, SMS, pager or via the BMS system.

Diverters

Diverters may be mounted in any orientation and may be provided with 2, 3, or 4 ports depending on the design intent.

Diverters shall be installed so that service access is not impeded.

If required, diverters shall be capable of operating in such a way that they are able to manipulate the air stream away from sensitive areas as quickly as possible, and shall therefore be capable of operation with “active air”

The rest position of the diverter shall be capable of being easily changed directly from the PC through the control software.

Transfer Units (Interchange Devices)

Transfer Units or Interchange devices (other than simple diverter interchanges) shall provide the following features as a minimum:-

- Automatic transfer of carriers from one system to another.
- Ability to recognize priority carriers and process them more quickly than normal transactions.
- Modular construction so that the network may be expanded as required.
- Ability to connect directly to “Express” or “Power” lines capable of transporting several carriers simultaneously in a single tube.
- Have a throughput capacity in the order of 21 carriers/hour (not including the return of capsules).
- Provide a carrier reading device such that the individual carrier ID is logged during transfer.
- When carriers pass through the transfer device, have the ability to reinstate any carriers recognized by their individual ID to their correct transaction destination if they have been previously “rejected” through a clearing operation.
- The ability to prohibit specific transfer routes if required for operational reasons.

Blowers (Exhausters)

Blowers shall incorporate the following features as a minimum:-

- Be 3 phase units appropriate to achieve a carrier speed of 6m/s in all circumstances.
- Incorporate anti-vibration mountings.

- Have soft start using a frequency inverter.
- Incorporate speed/energy control through manipulation of the inverter.
- Provide filter screens on all inputs.
- Provide silencers for air noise reduction.
- Be provided with an appropriate air shifter/valves to control the blow and suck operations.

Tube

Tube shall be installed to the following specification:-

- Transmission tube shall be outside diameter 160 mm grey colour hard UPVC tubing specifically produced for pneumatic tube transport system according to standards DIN/ISO 8061/8062 and 6660/6661.
- Tube bends shall be manufactured from UPVC tube as specified above. Bend radius shall be 800 mm, measured from the bend centre line and shall allow passage of carriers with dimension 350 mm inside length x 120 mm inside diameter. Bends shall maintain a uniform cross-section free from wrinkles and distortions.
- Joints shall be manufactured with UPVC tube connecting sleeves that are solvent welded with special solving glue.
- Expansion joints shall be provided in locations where building movement or change of ambient temperature might cause dislocation within the UPVC tubing.
- All tubing in the system shall be adequately supported at appropriate intervals with suitable clips, rods attached to suitable fixing anchors. The maximum distance between supports shall not exceed 2.5 meters. Support also has to be provided at centre of bend radius and at equipment connections. Special brackets may be used where convenient. All supporting material shall be of galvanized steel suitably protected at cut edges.
- Where tubing passes through a wall or floor the integrity of the fire rating shall not be reduced. Intumescent (crushing) type fire sleeves shall be installed at all such points.

Cable

Cable shall be appropriate for the installation and shall have shielded data cables that ensure compliance with EMC legislation.

Cable shall be securely mounted on to the transmission tube using cable ties at appropriate intervals.

Static Electricity

The system shall be designed to minimise the build up of static electricity and facilities are provided to safely discharge to earth, such that neither system malfunction or nuisance is caused.

Condensation

The system shall be designed to minimise the potential for condensation caused by the movement of warm wet air through cold tubes. The location of air inlets shall be designed to reduce the potential for large temperature reductions on the air within the system, both during the systems peak operation periods, and during times when the system is only lightly used.

The “timetable” feature in the control system shall be capable of programming regular air movement through the system if required.

Web Link Monitoring

This shall enable external connection to allow remote technical support from the Facilities Management Department or any other external point.

Power Failure

In the event that a power failure occurs, the system shall automatically be reinitiated on restoration of power, and any carriers that are contained within the system shall be removed and taken to their pre-programmed destination or to the assigned ‘dump’ station.

Fire Alarm

In the event that the fire alarm system is activated in the RHSC-DCN building (either in a real event, by accident or a planned test) then the system shall close down following completion of any transaction in progress. In the event of a fire alarm activation within the RIE Pharmacy and Laboratories then links to these buildings shall be closed down. As and when the Fire Alarm is reset then the system shall be reinstated. This can be carried out either manually or automatically. A manual ‘test’ key shall be provided to override and disable this facility for fire alarm testing, so as to avoid disruption to the system operation. This is to be positioned at the main control location (to be agreed).

X31 Pneumatic Tube Transportation System

GENERAL

110 PNEUMATIC DOCUMENT CONVEYING SYSTEM: RHSC + DCN building

- Completion:
  - Plant and equipment identification: Mechanical plant and equipment identification.
  - Commissioning: Testing and Documentation

SYSTEM PERFORMANCE

210 DESIGN
- Design: Complete the design of the pneumatic document conveying system.
- Proposals: Submit drawings, technical information, calculations and manufacturers' literature.

PRODUCTS

310 STATIONS: Refer to drawings for locations.

EXECUTION

620A INSTALLING STATIONS
- Location: As indicated on the Architect's drawings
- Mounting heights (maximum):
  - Top, side and front entry stations: Top of cabinet 1.6 m above finished floor level.
  - Bottom loading stations: Bottom of station 1.2 m above finished floor level.

630 INSTALLING BLOWERS
- Location: A clean, dust-free environment isolated from: Areas in which patients may be sleeping or staff working.

640 INSTALLING DIVERTERS
- Location: In service areas with good access for maintenance.

650 INSTALLING PIPELINE AND FITTINGS
- Location: Routed in ducts and ceiling voids, where possible.
- Arrangement: Use large bend radii to avoid blockages.
- Fire stopping: Where tubing passes through a wall, floor, ceiling or other barrier, ensure that the fire rating of the construction is not reduced. Install crushing type intumescent fire sleeves or collars.

COMPLETION

910 CLEANING

- Blower air intake: Free of dust, vegetation, waste, rubbish, builder's debris, or any other possible source of contamination.
- Pipelines: Purge to an open end, and clear of any dirt, dust or debris accumulated during construction.

920 TESTING

- Pre-commissioning:
  - Manual operation of equipment;
  - Static measurements and functional tests of individual components ; and
  - Visual inspection.
- Prior to handover: Ensure:
  - Access to all parts of the system is satisfactory and safe.
  - All components function correctly.
  - Electric circuits are completed, tested and energized.
  - Correct direction of rotation for electric motors.
  - Interlocks are operative and in accordance with specification.
  - Plant and installations have been provided and installed in accordance with the design specification and drawings.
  - Plant installation is complete, insulation, if required, is applied, and ducts and pipelines are identified, as specified.
  - Area containing blower is clean and dust free.

930 DOCUMENTATION

O& M documentation shall be issued at least three months before completion of any part of the contract.

The contents and format shall be agreed with the Board. The document shall be issued/uploaded on Aconex.

The Specialist shall provide instruction to the clients Engineers and maintenance staff in the safe operation of all systems and items of equipment for an adequate and reasonable period of time based on the Manufactures recommendations and best practice.

The Specialist shall provide adequate and qualified staff in order to carry out their maintenance and repairs during the defects liability period.

- Instructions: Submit operation and maintenance instructions for each station. .
- Label information: A directory of all available stations, clear step-by-step operating instructions, and action to be taken in the event of system failure.
- Record drawings: Provide:
  - Schematic diagrams of pneumatic air tube transport systems;
  - Schedules of blowers, stations, diverters, plant items, control sensors;
  - Schematic diagrams of control systems marked with set points; and
  - Traffic flow matrix.
- Programmes used by system: Submit full software listing.

Specification Check / Revision Sheet

Project	**RHSC-DCN Edinburgh Hospitals**	Project Number	**G1547**
Service (s)	**Mechanical**	Sheet	**WW AP.1.2.3 SMcK G1547**
Performance Specification Title	**Heating Systems**	Date	**August 2014**
Prepared By	**MM**	Checked By	**SMcK**

Revision Ref.	Date of Revision	Page N$^{o(s).}$	Revision Details	Checked By
FT	December 2013	All	Final Tender	SMcK
FC	July 2014	All	Update for Financial Close	SMcK
FC	August 2014	All	Comments Incorporated	SMcK

RHSC and DCN EDINBURGH
HEATING SYSTEMS

CONTENTS

1.0	GENERAL INTRODUCTION
2.0	SCOPE
3.0	SPECIFIC EXCLUSIONS
4.0	INTERFACES AND DEMARCATIONS
5.0	APPLICABLE STANDARDS
6.0	DESIGN CRITERIA
7.0	LIAISON
8.0	SYSTEM DESCRIPTION

MATERIALS AND WORKMANSHIP CLAUSES

T10	HEATING SYSTEMS
T20	GAS AND OIL FIRED BOILERS
T30	HEAT EMITTERS
T42	UNDERFLOOR HEATING AND COOLING

1.0 GENERAL INTRODUCTION

Purpose of Document

The manufacture, supply, installation, wiring, setting to work and commissioning of the works described in this document shall be undertaken by the Mechanical and Electrical Installer and is referred to in this document as Specialist.

To carry out the development of the design to form the installation, shall obtain the necessary supporting documentation.

This specification relates to the heating systems.

This specification shall be read in conjunction with all other mechanical and electrical engineering services specifications and the Architectural drawings.

Description of Project

The new facility shall re-provide services from the Royal Hospital for Sick Children, Child and Adolescent Mental Health Service and the Department of Clinical Neurosciences in a single building adjoining the Royal Infirmary of Edinburgh at Little France.

The DCN part of the Facilities will have a physical link with the existing RIE Facilities specifically with the critical care unit.

The building is generally constructed from reinforced concrete.

The basement houses FM support facilities and the main building services heat distribution centres and electrical plant rooms.

Ventilation plantrooms are generally located at roof level and level 2.

A central Energy Centre shall be provided to the South of the hospital housing heating, CHP, standby generation, fuel storage and utility incomers.

Pumps

All motors shall be selected to provide the most energy efficient solution conforming to Section 6 regulations. All pumps shall be fitted with IE2 efficiency motors to EN 60034-30:2009 as standard, and suitable for operation in ambient temperatures of 40 degrees C.

2.0 SCOPE

The scope of work covered by this specification shall include, but not be limited to the following:-

- Boilers
- Pumps
- Pressurisation Units
- Chimneys (including secondary steelwork)

- Pipework and associated items
- Heating terminal devices
- CHP

3.0 SPECIFIC EXCLUSIONS

The following is specifically excluded from the scope of this specification:-

- BMS and automatic controls

4.0 INTERFACES AND DEMARCATIONS

The heating system shall be provided as a complete working system serving the hospital. Project Co. shall provide information to other parties including power supplies and fire alarm system interfaces.

5.0 APPLICABLE STANDARDS

All elements of the works shall be in accordance with the requirements of current legislation, regulations and industry standards unless otherwise stated.

The heating system shall accord with all appropriate Scottish Health Technical Memoranda, Codes of Practice and relevant British and European Standards.

The equipment supplied shall conform with all relevant standards and regulations in force. The equipment shall be supplied with relevant Declarations of Conformity to certify compliance with the EMC directive 89/336/EEC-92/31/EEC and the Machinery Safety Directive 89/392/EEC-91/368/EEC-93/44/EEC. Also the equipment and installation shall comply with all relevant statutory requirements in force at the time:

6.0 DESIGN CRITERIA

Electricity Supply Characteristics

LV power characteristics: 400/230 V, 3-phase, 50 Hz, 230 V, 1-phase, 50 Hz.

External Design Conditions

Winter	-	-6°C sat
Sizing for air handling plant		-10°C
Summer	-	26°C db 19°C wb
Sizing for refrigeration plant	-	30°C

System Design Conditions

LTHW Flow Temperature	-	80°C
LTHW Return Temperature	-	60°C
LTHW Operating Pressure	-	3.5 bar
Incoming gas pressure		65mbar
Limiting noise criteria at site boundary	-	Refer to Acoustic Consultant's report

7.0 LIAISON

Project Co. shall include for liaison with:-

Health and Safety Professionals. As well as the Health and Safety requirements of this specification, Project Co. shall include for close liaison with Health and Safety professionals including the Hospital's Health and Safety Advisors and the CDM Co-ordinator and shall comply with the CDM Regulations and all Health and Safety Regulations.

Other Specialist. Project Co. shall liaise with other specialists as necessary to ensure that all interfaces between the Fire Detection and Alarm System and other systems are allowed for. This shall include but not be limited to:-

- Building Management System specialist
- Fire Alarm and Detection specialist

Any other member of the Project and Hospital Board teams concerned with the planning and administration of the heating system.

8.0 SYSTEM DESCRIPTION

Heating Installation

Heating for the building fabric, ventilation plant and hot water generation shall be derived from a Low Temperature Hot Water (LTHW) heating system.

The total heating load for the hospital site has been assessed at 5.6MW. For resilience purposes the boiler plant shall be arranged as two boilers duty with another standby boiler. The boilers shall be housed in the main Energy Centre to the South of the main hospital building to concentrate the maintenance of heavy plant away from the main hospital building.

To provide the 5.6MW load, the boiler plant shall comprise 3 No dual fuel LTHW boilers each sized at 3.2MW output giving a total available duty capacity of 6.4MW. Operation shall be on a 2 No. run. In the event of a catastrophic failure of a boiler the standby boiler shall be brought on line contribution which will allow the site to continue.

The boilers shall fire to maintain heat supply to primary LTHW heating circuits designed to operate at nominal system flow and return temperatures of 80ºC and 60ºC respectively. Temperature schedules and flow rates shall be introduced via the BMS control to enhance load matching and control regimes.

The boilers shall be of the shell and tube type with fully modulating dual fuel burners selected to provide efficient operation at varying load conditions in conjunction with sequence controls. Natural gas shall be the primary fuel. Emergency fuel shall be provided by gas oil. Both gas and oil supplies to the boilers shall have solenoid shut off valves linked to a fire detection system.

The boilers shall be arranged with reverse return flow and return headers and each boiler shall have its own primary circulating pump. A back end protection bypass shall be incorporated into each boiler assembly.

Each boiler shall have a matched flue gas economiser fitted to improve heat output efficiency.

Combined Heat and Power Plant

A natural gas fired combined heat and power (CHP) plant shall provide electricity (at Medium Voltage) and heat (85°C Flow and 75°C Return. A single gas fired CHP unit will provide 400kW electrical power and 600kW heating to reduce overall site CO2 emissions.(Refer to CHP specification WW AP.1.2.18 SMcK G1547).

Chimney

The boilers, CHP units and standby generators shall each have a stainless steel twin wall insulated flue, which shall exit the Energy Centre and terminate at a height to comply with the requirements of the Clean Air Act.

Project Co. shall allow for all supporting steelwork related to the flues.

Primary Heating Circuits

Primary heating circuits shall emanate from the Energy Centre arranged as A and B circuits fed from the respective boiler system. Each of the A and B pipework circuits is sized to provide the full hospital heating requirement.

The flow and return pipework shall be routed from the Energy Centre using accessible ground level ducts to enter the basement corridor system of the main hospital. At this point the A and B circuits shall join a header which, for resilience purposes, shall allow either A or B circuits to feed the hospital.

From the hospital header LTHW radial feeds shall run via the basement corridors and risers to the hospital's plant areas to serve heat stations and domestic hot water calorifiers.

The primary LTHW heating system (A and B) shall include the following elements:

- A common heating pressurisation plant with twin pump make-up plant and multiple expansion vessels to maintain the pressure in the heating system.
- Multiple circulation pumps (including one standby unit).
- A combined dirt separator/deaeration unit on the main flow pipework.
- The system shall be capable of being treated with corrosion inhibiting chemicals via a manual-dosing unit.

Two port control valves shall be provided on all of the major load centres to allow the use of variable volume control of the primary heating circuit. The circulating pumps shall be controlled by the BMS in sequence as needed to match the varying load demand. This shall maintain the pressure differential between flow and return pipework within set limits with sensors located within the main sub-distribution pipework. The system shall incorporate a number of three port constant volume valves to act as bypasses so that the minimum flow shall not be less than 40% of a single pump in operation.

In times of low heating load, one of the Boilers shall act as the lead boiler and with the CHP system provide heat to both the A & B circuits. The switching of one boiler, to the other, to act as lead, incorporating the CHP unit, shall be achieved by the opening and closing of various 2 port motorised valves.

A constant temperature flow and return will run from the energy centre to the air handling units located in the second and fourth floor plantrooms of the main building together with door curtains and duct mounted re heat coils.

Secondary Heating Circuits

From the heat stations installed within the plantroom areas, the secondary heating circuits systems shall emanate to serve specific zones of the hospital.

Each of the main secondary heating systems shall be self-contained to provide security of supplies between the various zones.

Each secondary heating system shall include the following elements:

- Run and stand-by secondary constant temperature circulation pumps.
- The system shall be capable of being treated with corrosion inhibiting chemicals via a manual-dosing unit.

The secondary constant temperature pumps shall circulate all the secondary water through the DHW calorifier integral heat exchanger with temperature control on the secondary side of the calorifier.

The main heating secondary flow and return temperature shall operate with a nominal design condition of 80ºC flow and 60ºC return.

The primary constant temperature system shall supply:

- The heating systems
- The various air handling unit heater batteries located throughout the associated plantroom areas and remote heater batteries as appropriate.

Two port control valves shall be provided on all the air handling unit heater batteries. This shall allow the use of variable speed control on the secondary constant temperature pumps to conserve energy and reduce carbon emissions. Pump speeds shall be varied by inverter motor control units which shall be controlled by the BMS to maintain the pressure differential between flow and return pipework within set limits with sensors located in the main sub-distribution pipework. The system shall not permit the secondary constant temperature pumps to operate at less than 40% of their design maximum.

The secondary heating circuit shall serve all the occupied areas heat emitters such as - radiant heating panels, low level low surface temperature heaters/ radiators and underfloor.

The local heat emitter valves shall generally be controlled by direct acting thermostatic radiator valves or electrically operated valves in conjunction with the room cooling devices, and, therefore, the secondary variable volume pumps shall be variable speed type with control via motor inverter unit, under the command of the BMS. BMS sensors and direct acting pressure differential units shall be installed in the secondary heating pipework system, as constant temperature system. The system shall not permit the heating pumps to operate at less than 40% of their design maximum.

The systems shall be divided into sections to allow individual wards and areas to be isolated from the main system for maintenance or shutdown.

Where departments are not operated on a 24 hour basis, the local heating circuits shall incorporate motorised valves controlled by the BMS on a timed basis, with optimised control to suit the particular occupation times.

All main and subsequent department branches shall be provided with balancing/measurement and isolation valves along with drain cocks, air vents etc. to ensure proper control and regulation of water flow rates under design load condition with flushing, draining and re-filling facilities.

Heat Emitters

Heat emitters shall generally be ceiling located providing inherent safety in respect of patient care. Where heat emitters are within touch of patients or the public, the emitters shall be of the low surface temperatures type with a mean surface temperature below 43°C.

The majority of heating shall be by either ceiling radiant panels, LST radiators or warm air systems.

These solutions shall limit surface temperature to prevent scalding to patients and the general public.

The individual room heating emitters (radiant heating panels, radiators etc.) shall be provided with local direct acting control valves, to restrict the water flow on rise of air temperature and provide local control facility. These shall be occupant adjustable, within set parameters.

Where emitters are located in areas provided with unitary cooling or air conditioning, controls shall be integrated to minimise energy consumption while maintaining local control.

Certain large open areas of the building, for example, hospital main entrance, atrium and Pod atrium shall be provided with underfloor hot water heating systems.

Air curtains shall be provided above entrance doors to alleviate drafts.

Domestic Hot Water Calorifiers

Domestic hot water service semi-storage calorifier equipped with integral non storage heat exchanger shall be served directly from the respective LTHW primary heating main to provide rapid recovery and optimum storage capacity.

T10 HEATING SYSTEMS

120 LOW TEMPERATURE HOT WATER HEATING SYSTEM

The LTHW system shall run from the heat stations situated at various locations around the hospital and serve the various heating circuits and emitters.

- Type: Constant temperature circuits.
- Heat source: Via dual fuel boilers and CHP located in energy centre.
- Pressurisation units: As section Y20 and schedule.
- Feed and expansion tanks: As part of the pressurisation unit for air break.
- Pumps: As section Y20 and pump schedule.
- Pipelines: As section Y10.
- Pipelines ancillaries: As section Y11.
- Thermal insulation: As section Y30.
- Vibration isolation: Inertia bases, as section Y31 and advised by the acoustic consultant.
- Heat emitters: As schedules.
- Controls: As section Y40.
- Accessories: As specification.
- Completion:
  - Cleaning and chemical treatment: Flushing and chemical treatment, as section Y12.
  - Plant and equipment identification: Mechanical plant and equipment identification, as Section Y32 and schedule.
  - Commissioning: Commissioning of heating systems, as section Y50.

SYSTEM PERFORMANCE

Project Co. shall supply and install services and equipment to perform as per specification. Project Co. shall submit details of all mechanical equipment for comment and place orders in a timely fashion to ensure delivery as per programme.

Where a particular manufacture is specified, Project Co. shall include for a product of that quality and performance.

Where considered appropriate, provide for equivalent standard alternatives to be offered for consideration.

This must be done in a timely manner and Project Co. shall provide all details including but not limited to.

- Detailed description
- Cost comparison
- Technical comparison
- Energy and carbon performance impact
- References to standards
- References to SHTMs

275 VARIABLE FLOW PIPEWORK SYSTEMS

Where the LTHW systems utilise variable volume control systems they shall have differential pressure control valves (DPCV) installed as indicated on the drawings, and supplied and installed by .

The purpose of the DPCV is to automatically compensate for the rise in differential pressure across the circuit that it services, as the circuit flow rate falls under the dictate of the 2-port control valve(s), and vice versa.

DPCVs used in conjunction with motorised control valves and TRVs will be arranged to maintain a constant differential pressure across the circuit.

Project Co. shall, in conjunction with the BMS Specialist, liaise with the DPCV supplier to ensure the correct motorised control valve selections are made and the whole system is compatible in terms of operating pressure ranges, etc.

Similarly, Project Co. shall, in conjunction with the BMS Specialist also liaise with the pump supplier, to ensure that the pump speed control system is totally compatible between the 3 elements, i.e. DPCV, motorised/thermostatic valves and pump characteristic and control.

It shall be noted that the minimum pressure drop across combination of control valve, coil and interconnecting pipework system and accessories is to be 25kPa to suit operation of DPCV.

The maximum operating pressure of the control valve, coil and interconnecting pipework/accessories shall also be reviewed against the selection of the DPCV.

EXECUTION

Project Co. shall ensure all works carried out shall be done is a safe manner and comply with Health and Safety Regulations.

This shall include clean and tidy working and working in confined spaces.

Due to the size of the water systems being installed all pressure testing and commissioning equipment shall be cleaned and chlorinated before each use.

This is to prevent the systems from being contaminated with pseudomonas.

620 INSTALLING WATER BASED HEATING SYSTEMS

- Standard: To BS EN 14336.

COMPLETION

O& M documentation shall be issued at least three months before completion of any part of the contract.

The contents and format shall be agreed with the Board. The document shall be issued/uploaded on Acconex.

Project Co. shall provide instruction to the clients engineers and maintenance staff in the safe operation of all systems and items of equipment for an adequate and reasonable period of time based on the manufactures' recommendations and best practice. Project Co. shall provide adequate and qualified staff in order to carry out their maintenance and repairs during the defects liability period.

Project Co. shall protect the system from damage or interference during the works. Project Co. shall Test, flush and clean the system as per section Y12, Y50, SHTM's and TR/20.

Project Co. shall submit O&M's.

Project Co. shall provide training as per section Y12, Y40 & Y50.

Project Co. shall provide spares as per section Y12, Y40 & Y50.

Project Co's. defects and liability period shall be as the contract prelims.

905 HYDRAULIC PRESSURE TESTING OF SYSTEMS

- Testing: In accordance with HVCA TR20 & TR/6. Also see section Y50.
- Notice (minimum): 1 week
- Pressure: 1.5 times working pressure (LTHW)
- Duration of test: 2 h.

920 OPERATING TOOLS

- Tools: Supply tools for operation, maintenance and cleaning purposes.
- Keys: Supply keys for valves and vents.

T20 GAS AND OIL FIRED BOILERS

380 DUAL FUEL FIRED STEEL SHELL BOILERS

The boilers shall be of the three pass shell and tube type with fully modulating dual fuel burners selected to provide efficient operation at varying load conditions in conjunction with sequence controls.

The entire boiler shall be clad within a heavy gauge sheet steel insulated jacket complete with inspection panels. The maximum case emission shall be no greater than 0.5% of the rated output.

Natural gas shall be the primary fuel. Emergency fuel shall be provided by gas oil to BS 2869 Grade D. The boilers shall have pressurised burners that operate on both fuels. Burners to be digital modulating with variable speed and air damper control and capacity control to achieve a high turndown ratio.

The burner shall be capable of operating safely at O_2 levels of less than 2% at high fire on gas through to 3.5% at low fire across the turndown range. On oil O_2 levels shall be 2.5% at high fire through to 4% at low fire.

Each boiler shall have a matched flue gas economiser fitted to improve heat output efficiency. The economiser shall be capable of being mounted as a stand-alone unit as well as directly attached to the boiler. Each economiser shall be fitted with an automatic motorised bypass unit which shall be activated when the boiler is operating on oil, or in the event of the economiser pump failing. This is to prevent damage to the economiser.

The boilers shall be arranged with reverse return flow and return headers and each boiler shall have its own primary circulating pump.

The boilers shall be supplied complete with burner attenuating hoods (refer to the acoustic consultants reports) to minimise noise breakout. Boilers or associated pumps shall not cause noise or vibration above that stated in this specification or SHTM's.

Safety blow of valves shall be piped to drain via a vented blowdown vessel.

All plinths/ anti vibration mounts shall be in situ prior to the delivery of the boilers so that the boilers can be sited in their permanent positions to prevent damage from moving.

- Standards: To BS 855, BS 2790 and BS EN 12953.
- Mounting: Floor mounted.
- Output (kW): As schedule.
- Seasonal efficiency: on gas 90% net excluding economiser
- Thermal performance testing: To BS 845-1.
- NOx emissions (maximum): Low NOx burner with oxygen trim control (<70mg/KWhr natural gas and <120mg/KWhr oil).
- Dual fuel burner: To BS 5885-1.
- Fuel: Natural Gas and Gas Oil to BS 2869 Grade D.
- Burner control: Modulating with turndown ratio on gas of 1:10
- Burner manufacturer – Dunphy, Weishaupt or Riello.
- Safety, control and monitoring of monobloc oil burners: To BS EN 230.
- Integral controls.

- Accessories: Both gas and oil supplies to the boilers shall have solenoid shut off valves linked to a fire detection system with battery back-up in the event of power failure, and:
  - Pressure gauge;
  - Safety valve; and
  - Temperature gauge.

A boiler instrumentation panel shall be provided and shall incorporate:-

On/off switch,
Control thermostat,
Limit thermostat (automatic reset),
Thermometer.
Burner enable relay
Safety controls/burner, water flow interlocks
Modulating controller
Remote fuel change over switch
Gas/oil key switch
Motor/control relay fuses
Valve proving lamp
Indicating Lamp for both gas and oil;

- Burner on
- Burner lock-out/fault
- Boiler excess temperature
- Gas pressure/valve proving system fault
- Gas fault
- Re-set button
- % Firing rate indicator.

Some of the above features may be duplicated on the burner control panel as described below. The burner controls shall take precedence and the duplicated elements of the boiler controls may be omitted.

The boiler control panel must be capable of being fully interrogated by the building management system through the independent network protocol.

The direct digital combustion control system shall incorporate the following features:

- membrane keypad
- programmable sequence timing control for pre-purge, ignition and post-purge
- controls fuel safety valves, ignition circuit, oil pump and fan motor
- gas and oil valve proving and leakage detection systems with continuous pressure monitoring and alarm limits
- proof of closure system for fuel valves
- choice of operation with or without pre-purge or post purge
- pilot with or without main valve
- programmable thresholds for pilot and main flame
- primary and secondary air pressure monitoring
- simultaneous firing capability

- range of self checking, fail-safe boiler pressure and temperature sensors
- servo drives on each system (power rating restricted)
- fuel/air ratio control with independent control of each valve controlling servo
- valves and dampers may open and close within the modulating section of the profile
- multiple fuel profiles
- profile change while firing
- PID for control of modulation rate from boiler sensor
- auxiliary modulation / set-point input, suitable for modulation from BMS
- adjustable boiler warming limit and period
- fail safe digital inputs for alarm / shut-down / lockout– e.g. high/low water, low oil temperature etc. with annunciation on display
- programmable relay outputs + Alarm/Fault relay
- real time clock
- hours run logged per profile
- diagnostics and 1at least 100 event history log (fault history)
- auto / manual modulation
- Comview access for commissioning data and boiler/burner data display
- variable fan speed control
- Oxygen trim

A burner mounted control cabinet shall house all primary components:

- ignition unit
- starter for oil pump
- The cabinet shall be hinged to provide access to the internal components.
- All necessary relays and circuit breakers

The digital burner management system shall control the burner by an electronic air /fuel ratio control system giving direct digital control of the air and fuel drives including motors for the air inlet damper, gas butterfly valve and oil metering valve. The accuracy of the servo motors shall be controlled to 0.1 degrees angular.

- PT 100 Modulating temperature controller
- Modbus RS 485

The oxygen and monitoring trim system shall monitor flue gas oxygen and temperature levels and provide closed loop oxygen trim control including:

- Oxygen analyser probe complete with: -
  - zirconia cell
  - in-built probe heater
  - probe mounting boss
  - air inlet temperature sensor
- Oxygen probe interface unit providing indication of: -
  - oxygen level
  - flue gas temperature
  - burner inlet temperature
  - calculated boiler efficiency

The burner gas train constructed to BS EN 161 including:

- Gas line inlet filter
- low gas pressure switch
- high gas pressure switch
- twin gas valve actuators
- valve proving system
- gas pressure test points
- terminal connection box

400 AIR SUPPLY TO APPLIANCES

- Standards: To BS 5440-2 and BS 6644.
- Sizes The boiler house shall have natural ventilation openings for combustion and ventilation in accordance with BS6644/1990.
- Location: See Drawings.

EXECUTION

Project Co. shall protect boilers from damage or interference during the works.

Project Co. shall include for the services of the presence of the boiler and burner manufacturer's skilled services engineers to start up, test and check all burner/boiler controls. The units when commissioned, shall be "Set Up" to give maximum combustion efficiency of no less than 80% when the draught over the combustion space has been regulated within the limits laid down by the boiler manufacturer. Flue gas outlet temperatures shall require to be recorded at this stage, together with all relevant details necessary to ascertain the efficiency of the plant. All of the testing shall be carried out by 's appointed specialist and then witnessed by the Board's appointed representative before the boiler plant shall be accepted from the Board. A complete set of boiler flue cleaning tools shall be supplied complete with wall mounting rack and fixings. Project Co. shall allow for instruction of the clients representative on the working of the boiler plant.

610 INSTALLING BOILERS

- Standards:
  - Gas fired boilers: To BS 6798 and BS 6644.
  - Oil fired boilers: In accordance with BS 5410.
- Fixing of equipment, components and accessories: Fix securely on purpose-made bases or supports.
- Preparation: Immediately before installation of lagging and casing, pressure test joints.
  - Results: Submit.
- Space around the boiler: Adequate:
  - to ensure sufficient air circulation for draught diverter operation;
  - to ensure sufficient air for combustion and cooling; and
  - for maintenance and servicing.
- Location: Minimum 75 mm from combustible material.
  - Access: Provide for inspection and servicing of boilers and ancillary equipment.

T30 HEAT EMITTERS

PRODUCTS

All elements of the work shall be in accordance with the requirements of current legislation, regulations and industry standards.

The installation shall also comply to the SHTM code of practices and relevant British standards.

Project Co. shall allow for supplying samples and constructing mockups for comment.

This shall include ceiling mockups for the radiant panels.
All emitters must be selected to meet the schedule and specification with particular reference to noise criteria.

All emitters shall have smooth easy clean surfaces with no sharp edges or dirt collecting gaps.

All emitters shall be suitable for hospital application.

Access doors and hatches shall be provided to service and maintenance purposes.

310 AIR CURTAINS

Warm air curtains shall be provided in entrance areas to avoid draught. All units shall be fed from the LTHW system.

The air curtain shall be suitable for the mounting height. Grilles to be powder coated to Architect's specification.

Heat exchanger tube material to be copper, fin material: aluminium.

Connections to be terminated externally on recessed models and hidden within the unit on exposed models.

All coils pressure tested to 22 bar (350 lbs/in2).

Fans to have a unit mounted two-speed switch.

Unit to be fitted with air flow device to alarm BMS in case of fan failure.

- Method for testing and rating: To BS 4856-1,-2,-3 and -4.
- Type: LTHW Water.
- Requirements: As air curtain schedule.

340 NATURAL CONVECTORS LOW LEVEL

Low level convectors shall be cased copper fined tubes with extruded aluminium grilles suitable for hospital applications.

The emitters will be of the low surface temperatures type with a mean surface temperature below 43°C.

Final sizes of convectors to be site measured by and made to order.
Control shall be via thermostatic radiator valves.

- Standards: To BS EN 442-1, -2 and -3.
- Requirements: As Natural convector schedule.
- Third party certification to RADMAC scheme: As BS 442.

355 RADIANT PANELS

Radiant panel shall be lightweight, manufactured from Aluminium plate and have copper tube pathways and have foil faced Class O encapsulated insulation fitted at the back of the panels. Radiant panel shall be suitable for ceiling type.

All panels to be of modular length to suit 600 mm ceiling tile arrangement. Strengthening sleeves should be used with compression fittings.

Any junctions between panels to be covered by a purpose made cover plate which allows for any panel expansion.

The panels shall come complete with necessary supports, headers, drains, vents, or panel interconnectors.

The face plate to be attached by an extrusion to a copper pipe grid which shall provide plain copper ends for connecting to the heating system. The extrusion shall allow for differential thermal movement when attached to the face plate without distortion.

Each panel shall have a set of plain copper ends for connection by the aub-Board.

The panel connections shall avoid excessive pressure drops.

The panel manufacture shall supply all flexible interconnections between panels where required.

In locations where no other forms of heating or cooling is supplied the panels shall be fitted with an isolation valve on the return and a TRV on the flow.

Where panels are fitted in a location with other forms of heating or cooling the panel shall be controlled via a motorized two port valve and wall-mounted room sensor.

The faceplate of the panels shall be continuously supported by a trim to allow support and thermal movement without distortion of the face plate.

The edge trim shall be supported of the perimeter wall by suitable fixings.

Project Co. shall provide a typical ward layout drawing and install a mock up as part of the contract. The mock up installation type shall be agreed upon before final installation commences. Ral colour by Architect

- Standard: To BS EN 14037-1, -2 and -3.

380 TRENCH HEATING

Trench heating shall be cased copper fined tubes with extruded aluminium grilles suitable for hospital applications.

Final sizes of convectors to be site measured by and made to order
The depth of the trench heating is to be co-coordinated with the Board to ensure the trench heating is flush with the finished floor surface.
Control shall be via two port valves with room thermostats.

- Standards: To BS EN 442-1, -2 and -3.

EXECUTION

Project Co. shall protect the emitters from damage or interference during the works.

Project Co. shall supply and install services and equipment to perform as per specification. Project Co. shall submit details of all mechanical equipment for comment and place orders in a timely fashion to ensure delivery as per programme.

Where a particular manufacture is specified, Project Co. shall include for that manufacturer.

Where considered appropriate, provide for equivalent standard alternatives to be offered for consideration.

This must be done in a timely manner and Project Co. shall provide all details including but not limited to.

- Detailed description
- Cost comparison
- Technical comparison
- References to standards
- References to SHTM's

610 INSTALLATION GENERALLY

- Fixing: Securely and parallel or perpendicular to the structure of the building.
- Stud walls: Fix to studs and/ or noggins.
- Isolating valve: Provide on flow pipelines.
- Regulating valve: Provide on return pipelines.

620 INSTALLING UNIT HEATERS AND AIR CURTAINS

- Suspension: Fix high level supports.

T42 UNDERFLOOR HEATING

PRODUCTS

All elements of the work shall be in accordance with the requirements of current legislation, regulations and industry standards.

The installation shall also comply to the SHTM code of practices and relevant British standards.

A proposed drawing list shall be submitted by .
All items of heating plant and system controls must be capable of being fully interrogated by the building management system through the independent network protocol.

310 LOW TEMPERATURE HOT WATER UNDERFLOOR HEATING

- Standards: To BS EN 1264-1.
- Manufacturer: Project Co. choice

Project Co. shall employ a specialist underfloor heating company to design the layout, supply and install the underfloor heating where shown on the drawings.

The construction drawings shall be sent to the Board at an agreed period prior to installation.

The manifold shall be easily accessed for servicing with the minimum disturbance to the running of the hospital.

The underfloor heating shall be five layered polybutylene pipework fixed to the insulation, covering the area. All materials used I the construction of the pipework and insulation shall be free from CFCs, HFC's or HCFC's

A compatible screed shall be applied to the whole floor area, encasing the pipework.

The screed over the pipework shall be as manufacture recommendations and shall have expansion joints. Screed cover and drying times must be adhered to.

The system shall have a mixing modular manifold to allow for the lower water temperatures for the underfloor heating system and to disturbed the heating medium.

- Product reference: As schedule.
- Pipes: To BS 7291 or DIN4726.
- Material: Polybutylene (PB).
- Floor type: Solid.
- Maximum floor surface temperature:
  Floor surface temperatures shall not exceed level that will cause discomfort or damage the floor. Recommended temperatures are:
  Occupied areas 29°C
  Peripheral areas 35°C

- Accessories:
  - Flow control valve;
  - Manifold; and
  - Regulation valve.
- Water temperature control unit: Part of the manifold system.

Room temperature control: The underfloor heating shall be controlled by tamperproof room thermostats.

- Proposals: Submit drawings, technical information, calculations and manufacturers' literature.

EXECUTION

Project Co. shall ensure the area where the underfloor heating has been installed is clearly marked and protected to prevent damage from drilling or impact to the floor.

610 INSTALLATION

- Standard: To BS EN 1264-4.
- Fixing of manifold: With access for regulation and maintenance.
  - Location: Away from areas sensitive to noise.
- Fixing of pipes: A proprietary fixing system to locate pipes accurately until floor finish is laid.

Specification Check / Revision Sheet

Project	**RHSC and DCN Edinburgh Hospitals**	Project Number	**G1547**
Service (s)	**Mechanical & Electrical**	Sheet	**WW AP.1.2.10 SMcK G1547**
Performance Specification Title	**Dry Riser and Sprinkler System**	Date	**August 2014**
Prepared By	**DW**	Checked By	**SMcK**

Revision Ref.	Date of Revision	Page N$^{o(s).}$	Revision Details	Checked By
FT	December 2013	All	Final Tender	SMcK
FC	July 2014	All	Update for Financial Close	SMcK
FC	August 2014	All	Comments Incorporated	SMcK

RHSC and DCN EDINBURGH
SPRINKLER SYSTEM

CONTENTS

1.0 GENERAL INTRODUCTION

2.0 SCOPE

3.0 SPECIFIC EXCLUSIONS

4.0 INTERFACES AND DEMARCATIONS

5.0 APPLICABLE STANDARDS

6.0 DESIGN CRITERIA

7.0 LIAISON

8.0 SYSTEM DESCRIPTION

MATERIALS AND WORKMANSHIP CLAUSES

S61 DRY RISER SYSTEM
S63 SPRINKLER SYSTEM

1.0 GENERAL INTRODUCTION

Purpose of Document

The design, manufacture, supply, installation, wiring, setting to work and commissioning of the works described in this document shall be undertaken by the a specialist fire protection Installer and is referred to in this document as “specialist”.

To carry out the development of the design to form the installation, Project Co. shall obtain the necessary supporting documentation.

This Performance Specification relates to the Fire Fighting Systems.

This specification shall be read in conjunction with all other mechanical and electrical engineering services specifications and the Architectural drawings.

Description of Project

The new facility shall re-provide services from the Royal Hospital for Sick Children, Child and Adolescent Mental Health Service and the Department of Clinical Neurosciences in a single building adjoining the Royal Infirmary of Edinburgh at Little France.

The DCN part of the Facilities will have a physical link with the existing RIE Facilities specifically with the critical care unit.

The building is generally constructed from reinforced concrete.

The basement houses FM support facilities and the main building services heat distribution centres and electrical plant rooms.

Ventilation plantrooms are generally located at roof level and level 2.

A central Energy Centre shall be provided to the South of the hospital housing heating, CHP, standby generation, fuel storage and utility incomers.

Pumps

All pumps shall be fitted with IE2 efficiency motors to EN 60034-30:2009 as standard, and suitable for operation in ambient temperatures of 40 degrees C.

2.0 SCOPE

The scope of work covered by this Performance Specification shall include, but not be limited to the following:-

- Dry Riser Systems
- Automatic Sprinkler Systems

3.0 SPECIFIC EXCLUSIONS

The following is specifically excluded from the scope of this Specification:-

- Fire detection and alarms
- Gas suppression systems
- External fire hydrant systems
- Helipad foam fire suppression system
- Energy Centre foam protection system.

4.0 INTERFACES AND DEMARCATIONS

The fire fighting systems shall be provided as complete working systems serving the new building with interface with existing system serving Main Hospital Building and. Project Co. shall provide information to other parties including for power supplies and fire alarm system interfaces with the existing Main Building System.

5.0 APPLICABLE STANDARDS

All elements of the works shall be in accordance with the requirements of current legislation, regulations and industry standards unless otherwise stated.

The Fire Fighting Systems shall accord with all appropriate Hospital Technical Memoranda, Codes of Practice and relevant British and European Standards, LPC Rules, Building Control, Scottish Water Regulations.

6.0 DESIGN CRITERIA

Electricity Supply Characteristics

LV power characteristics: 400 / 230 V, 3 phase, 50 Hz 230 V, 1 phase, 50 Hz.

The dry riser system shall generally comply with BS9990.

Generally the sprinkler installation shall comply with the requirements of BS EN 12845:2004 + A2:2009 and LPC Rules for Automatic Sprinkler Installations 2009, life safety, and comply with the requirements of BS 9999:2008 with the following criteria:

Life Safety
Hazard classification = OHI (TBC by Sprinkler Designer)
Minimum density of discharge = 5mm/min
AMAO = 216m²
System types = wet automatic
General Sprinkler temperature rating = 68°C
Sprinkler head type: Quick Response
Single sprinkler coverage = 12m²
Highest sprinkler = 30 metre between highest and lowest.

7.0 LIAISON

Project Co. shall include for liaison with:

Health and Safety Professionals. As well as the Health and Safety requirements of Parts A, B and C of this specification, the Specialist shall include for close liaison with Health and Safety professionals including the Trust's Health and Safety Advisors and the CDM Co-ordinator and shall comply with the CDM Regulations and all Health and Safety regulations.

Other Specialist installers. The Specialist shall liaise with other Specialists as necessary to ensure that all interfaces between the Fire Fighting Systems and other systems are allowed for.

Any other member of the Project and Trust teams concerned with the planning and administration of the fire fighting systems.

8.0. SYSTEMS DESCRIPTIONS

Fire Fighting Systems shall comprise of the following:-

1) Dry riser System
2) Automatic sprinkler installation

DRY RISER SYSTEM

A dry riser main shall be provided in each of the 6No protected fire fighting cores. Dry riser landing valves shall be provided on each floor landing of the fire fighting cores and the dry riser main shall extend down to basement level to serve landing valves.

Dry riser landing valves shall also be provided to serve each plant room.

Dry riser inlet boxes shall be located at the ground floor perimeter of the building to serve their respective fire fighting cores. The inlet boxes shall contain a two-way or four way dry riser inlet breeching pieces and shall complete with a 25mm diameter drain valve.

Air release valve shall be provided at the top of each riser.

Each breeching piece shall be contained within a vandal resistant box complying with the requirements Where inlet valve boxes are located in areas of aesthetic consideration an Architectural infill to the box front shall be provided as described with the equipment schedules.

Dry riser mains shall be electrically earthed. Any points which do not provide electrical continuity shall be bonded.

AUTOMATIC SPRINKLER INSTALLATION

Sprinkler System Strategy Description

A Sprinkler System shall be provided to protect the departments as detailed in the final agreed fire strategy document.

An Ordinary Hazard level of protection as described within BS EN 12845 shall generally be provided to all hospital areas identified as high hazard or adjacent area within Fire Engineering Report.

Areas that shall not be automatic sprinkler protected and these include:

- Hub Rooms
- Computer Rooms
- Sub Stations
- Areas out with those highlighted in the fire strategy

Other areas to be identified on final agreement of the Fire Engineering Report and Strategy document.

An unmetered mains water supply shall provide water to the sprinkler storage tank and shall be provided as part of the fire water main to the site. The main shall be trace heated as it enters the basement. Water storage shall be provided by 70m^3 full capacity storage in a dedicated split tank within a dedicated fire protection water tank room, situated in the plant zone in the basement of the building. Water Storage tanks to be LPC approved

Duplicate electric run/standby pump sets shall be provided to satisfy the system demand pressure as detailed in BS EN 12845:2004 + A2:2009. Both pumps shall be fed from the general electrical distribution system and off the essential services generator supported supply.

A small jockey pump shall be included in the automatic sprinkler pump set to maintain static pressure on the system. Test water shall be returned to the tanks for water preservation purposes.

Each pump shall be arranged to draw water from either tank section and arranged so that any one pump or either tank section can be isolated.

All sprinkler main installation control valves, dual sprinkler pumps and valves sets etc shall be housed within the tank room. From the sprinkler tanks water shall be pumped via sprinkler mains running in the basement corridors to run to main service risers to rise and be distributed to the various sprinkler protected areas on the upper floors.

All sprinklers system signals must be interfaced into the BMS for monitoring and maintenance purposes. Sprinkler heads shall be pendant bulb type with brass finish in plant and other associated areas, and chrome or white finish in hospital areas. Sprinkler heads shall be either exposed or semi-recessed and of the quick response type. All sprinkler heads shall be nominally 15mm diameter. On a floor where sprinkler protection is required there shall be suitably sized branch lines from the riser with flow switches and drain lines. All sprinkler heads on the local pipe ranges shall be fast response heads set at $68^{O}C$, but consideration shall be given to the likelihood of a raised ambient temperature in special process areas, where a localised hot spots could result in $68^{O}C$ being exceed.

Testing procedures shall be carried out by an LPC qualified installer and shall consist of a dry pipework test involving a charge to the system with water to a pressure of 2.5 bar (250 kPa) which shall be maintained for a 24 hour period. During this period inspect the system to check that no water leaks at joints or valves.

Standards

The Sprinkler System will be designed, installed & commissioned to comply with the intent of the following:-

- IHSL Fire Strategy Document
- SHTM82 Supplement 4
- SHTM/HTM 05-01
- BS EN12845:2004
- BS 5306 Part 2:1990
- LPC Rules for Automatic Sprinkler Installations 2009
- EMC Directive 89/336/EEC

Sprinkler Equipment and Facilities

Tanks

Standard: To BS EN 12845.

The tanks shall be sectional steel type construction free from suspended fibrous or other matter, which may accumulate in the system pipework and provided with suitable isolating valves (interlocking key type) and drain points.

Pump Sets

Duplicate electric run/standby pump sets shall be provided to satisfy the system demand pressure as detailed in BS EN 12845:2004 + A2:2009. Both pumps shall be fed from the general electrical distribution system and off the essential services generator supported supply.

A small jockey pump shall be included in the automatic sprinkler pump set to maintain static pressure on the system.

Pipework

Standard: To BS EN 12845.

Wet installation pipework shall be carbon steel tube with appropriate screwed fittings or mechanical grooved couplings and prefabricated welded sections.

All pipeline materials including any pipeline ancillaries shall be as listed and approved by the LPC.

The pipework for the sprinkler installations will be black coated steel medium weight to B.S. 1387 or BS EN 10255.

Valves will be black steel or galvanised heavyweight, depending on the requirements of the local water authority.

The fittings would be malleable iron, cast iron or welded.
From 65 mm diameter and above grooved coupling will be used.

The necessary pipe support brackets for hanging the pipework are included and will comply with the BS EN 12485 requirements for spacing and size of the components.

Sprinkler Heads

Standard: To BS EN 12259-1

The installation shall be upright or pendant in line with the architectural finish of the ceiling or void. The heads shall be chrome or white finish in hospital areas and brass where located in exposed areas such as Plant rooms.

Where appropriate the heads shall be fitted with the deflector parallel to the slope of the roof, ceiling or pitch line of the stairs and plant electrical distribution equipment.

Sprinkler heads shall be pendant bulb type with brass finish in plant and other associated areas, and chrome or white finish in hospital areas.

Temperature rating: Normally 68C, in areas of high ambient temperatures, sprinkler heads with a higher temperature will be used.

Valves

The Sprinkler System will be controlled by wet pipe control valves tested and approved to L.P.C. standards each comprising a 150mm alarm valve with flanged or grooved connections, a 150mm butterfly valve, two 100mm diameter dial pressure gauges and cocks, an alarm trim, a drain valve and butterfly valve and flow switch.

Pressure Gauges

100 mm diameter Pressure Gauges to be installed as per SHTM/HTM 05 and LPC Rules for Automatic Sprinkler Installations These will be manufactured and installed to BS EN 837-1.

The gauges shall be installed immediately downstream of the tail end valve but upstream of any subsidiary stop valve; between the supply pipe stop valve and the check valve on a town main connection; and downstream of outlet check valve and upstream of outlet stop valve on pump supply.

Trace Heating

Exposed incoming pipework shall be trace heated to provide frost protection to maintain a minimum water temperature at 4°C.

Identification and Labelling
Labelling shall be to BS 1710, BS 5499-1 and BS EN 12845. A location plate shall be provided on external wall as close as practical to the entrance nearest the installation main control valve set. Label signage shall be provided for stop valves, incorporating the main and any subsidiary stop valves. Sprinkler heads shall include the orifice size on sprinkler body or deflector.

Monitoring & Alarms

All sprinklers system signals must be interfaced into the BMS for monitoring and maintenance purposes. Alarm indication shall alert on the BMS panel, Fire Panel, Main reception and Security office

All the monitored sprinkler equipment such as pumps valves and flow switches will be wired to an addressable panel. A flow alarm switch will be provided on the alarm valve riser to give remote alarm indication.

A water motor alarm gong will be supplied with the alarm valve. All the stop valves will be completed with a tamper switch. The installation of the gong will be on the outside of an exterior wall.

Each zone valve and flow switch will be connected to an I/O box wired to the addressable panel and fire detection system.

Specialist Systems

Fire suppression systems such as the Foam Extinguishing System to the Helipad and the FM200 type gas suppression to the Server rooms are provided as a separate package provided by a specialist contractors.

These systems do not form part of the sprinkler system installation, but shall be integrated with the Fire Alarm and BMS panels in event of operation.

User Interface

A specialist sprinkler maintenance contractor shall perform the routine maintenance activities on the sprinkler installation.

Day to day operation of the system will involve monitoring of the installation status via the dedicated sprinkler control panel and the interfaces with the BMS and Fire Alarm system.

Training and O&M information shall be provided during the commissioning and handover period of the construction.

MATERIAL AND WORKMANSHIP CLAUSES

S61 Dry riser systems

To be read with Preliminaries/ General conditions:

109 GENERAL: The Board shall employ a specialist Board to design, supply and install the dry risers.

110 DRY RISER SYSTEM: [Shall be located in the protected fire cores]
Inlet breechings: [Twin inlet breeching for 100 mm nominal bore riser].
[Four way inlet breeching for 150mm nominal bore riser].
Distribution pipelines: Heavy quality galvanized wrought steel pipe.
Outlets: Landing valves.
Accessories: [As specialist Board schedules].

209 SYSTEM PERFORMANCE:
All drawings and calculations for the dry riser system shall be issued to the Consultant and Fire Officer for comment two weeks before programmed construction commences.

210 DESIGN:
Standards: In accordance with CIBSE Guide, volume E and BS 9990.
Design: Complete the design of the dry riser system.
Proposals: Submit drawings, technical information, calculations and manufacturers literature.

310 INLET BREECHINGS AND BOXES: [5No]
Standard: To BS 5041-3.
Type: [Two way] + [Four way]
Manufacturer: [Board's choice].
Product reference: [Board's choice].
Integral accessories: Instantaneous inlet coupling, cap and chain, drain valve, non return valve.
The two-way + four way inlet breeching valves shall be contained within a valve box to a pattern and colour approved by the Architect. The box is to be marked "FIRE MAIN INLET – DRY RISER".

320 LANDING VALVES AND BOXES: [To all floor landings, plant rooms and basement level]
Where the landing valves are required to be contained within a landing valve box, the pattern and colour shall be approved by the Architect. The valve box shall be marked "FIRE MAIN OUTLET – DRY RISER".
All valve boxes in risers shall be provided with fire protection cladding, to give fire integrity protection to match the riser wall specification, in accordance with Building Control requirements.
Landing valves: To BS 5041-2.
Outlet boxes: To BS 5041-4.
Type: [Board's choice].
Manufacturer: [Board's choice].
- Product reference: [Board's choice].
Integral accessories: Cap and chain, leatherstrap.
Other accessories: [Board's choice].

330 COUPLINGS:
Standard: To BS 336.
Type: [Board's choice].
Manufacturer: [Board’s choice].
- Product reference: [Board’s choice].

340 CAPS AND CHAINS:
Standard: To BS 336.
Manufacturer: [Board’s choice].
- Product reference: [Board’s choice].

350 DRAIN VALVES:
Standards: To BS 5154 or BS EN 12288, rating PN 16, and BS 5041-3.
Type: Gate valve.
Manufacturer: [Board's choice].
- Product reference: [Board's choice].
Size: 25 mm.
Handwheel: Provide with leather securing strap and notice.
Accessories: Cap and chain.

360 AIR RELEASE VALVES:
Manufacturer: [Board’s choice].
- Product reference: [Board’s choice].

370 NON-RETURN VALVES:
Type: [Board's choice].
Manufacturer: [Board’s choice].
- Product reference: [Board’s choice].

380 LEATHER STRAPS:
Manufacturer: [Board’s choice].
- Product reference: [Board’s choice].
Width (minimum): 12 mm.
Thickness (minimum): 2 mm.
Accessories: Small non-ferrous padlock with keys.

609 EXECUTION:
The Board shall clean, flush and test the system as per regulations, SHTM, BS 9990, this specification and to the Fire Officer’s requirements.

620 INSTALLING INLET BREECHINGS:
Location: Within 18 m and within sight of access road.
- Unrestricted access: Required.
Length of connecting pipework between the inlet and the vertical run of the main riser: Minimize.
Fall: Towards the drain valve.
Inlet box mounting height: Lower edge400 - 600 mm above ground level.
Inlet boxes: Identify with permanent signage.

630 INSTALLING PIPELINES:
Appearance: Install pipes straight and parallel or perpendicular to walls, floors, ceilings, and other building elements.
Dirt, insects and rodents: Prevent ingress.

Access: Locate runs to facilitate installation of equipment, accessories and allow access for maintenance.
Changes in direction: Provide standard bends. Do not use elbows.
Pipelines finish: Smooth, consistent bore, clean, free from defects, e.g. external scratching, toolmarks, distortion, wrinkling, and cracks.
Joints, bends and offsets: Minimize.
Drains and vents: Fix to falls. Provide draining valves at low points and vents at high points.
Electrical equipment: Install pipelines a minimum distance of 300 mm from electrical equipment. Do not run pipelines through electrical plant areas or above switchgear.
Fixing: Secure and neat.
Pipeline support: Prevent strain, e.g. from valve operation.
Thermal expansion and contraction: Allow for thermal movement of pipelines. Isolate from structure. Prevent noise or abrasion of pipelines caused by movement. Sleeve pipelines passing through walls, floors and other building elements.

640 INSTALLING LANDING VALVES:
Mounting height above floor level to underside of landing valve: 750 mm.
Testing: Provide an outlet at roof level.

650 IDENTIFICATION AND LABELS:
Standards: To BS 1710 and BS 5499-1.
Valve labels: Provide stating function.
Drain valve identification: Provide notice stating ‘Dry riser drain valve’.

909 COMPLETION:

910 FLUSHING:
Operation: Fill the system with water and discharge it via the topmost outlet. Flush out debris.

920 TESTING:
Testing: In accordance with BS 9990.
Notice before testing (minimum): 3 days.
Static pressure test: Charge the system with water to a pressure of 1000 kPa. Maintain for 15 minutes. During this period, inspect the system to check that no water leaks at joints or landing valves.
- Results: Submit.

Flow test: Pass water through the system under pressure and record flow gauge readings.
- Timing: After static pressure test.
- Results: Submit.

930 SETTING TO WORK:
Operation: Check operation of non-return valves.
Make ready: Drain system and leave ready for use.

940 DOCUMENTATION:
Manufacturers’ operating and maintenance instructions: Submit.
Test records: Submit a record of inspections and tests.
Record drawings: Submit drawings showing location of pipe runs, inlets, landing valves and drain valves.

950 OPERATING TOOLS:
Tools: Supply tools for operation, maintenance and cleaning purposes.
Keys: Supply keys for padlocks and air release valves.
- Quantity: As per contract requirements.

S63 Sprinkler systems

GENERAL

Project Co. shall employ a licensed specialist to design and install the sprinkler system.

Fire Protection Services shall be provided to protect the building to meet the requirements of SHTM/HTM05, the Fire Officer, Building Control, LPC Rules for Automatic Sprinkler Installations and the current Fire Safety Design Strategy.

All items of Sprinkler plant and system controls must be capable of being fully interrogated by the building management system through the independent network protocol.

The system will protect the building from serious fire damage.

110 SPRINKLER SYSTEM

All areas identified as requiring sprinklers shall be ordinary hazard group 1 life safety.
(TBC by Sprinkler Designer)

Test water shall be returned to the tanks for water preservation purposes. From the sprinkler tank(s), water shall be pumped throughout the building and distributing to the various sprinkler protected areas via the main service risers; from dual electric run/standby pumps both supported off the standby diesel generator. A small jockey pump shall be included to maintain static pressure on the system.

Where sprinkler protection is required, there shall be suitably sized branch lines from the riser with flow switches and drain lines. All sprinkler heads on the local pipe ranges shall be fast response heads set at 68oC, but consideration shall be given to the likelihood of a raised ambient temperature in special process areas and could result in 68oC being exceed.

Wet installation pipework shall be carbon steel tube with appropriate screwed fittings or mechanical grooved couplings and prefabricated welded sections.

All pipeline materials including any pipeline ancillaries shall be as listed and approved by the LPC.

All sprinklers system signals must be interfaced into the BMS for monitoring and Maintenance purposes.

- Classification to BS EN 12845: As specialist Board schedules.
- Type: As specialist Board schedules and specification.
- Sources: As specialist Board schedules and specification.

- Distribution below ground: As specialist Board schedules and specification.
- Distribution above ground upstream of alarm valve: As specialist Board schedules and specification.
- Distribution above ground downstream of alarm valve: As specialist Board schedules and specification.
- Outlets: Sprinkler heads.
- Accessories: As specialist Board schedules and specification.
- Completion: As specialist Board schedules and specification.

SYSTEM PERFORMANCE

All sprinkler pipework exposed to the frost will be insulated or trace heated to prevent freezing.

All drain valves will be fitted at each lowest point of the sprinkler pipe work. These valves will be equipped with a padlock and a Leather straps.

The installation will be subdivided into zones in accordance with regulations. Each zone valve arrangement will comply with the Life Safety requirements and each zone will not exceeded 2400 m2. The drain on each branch will be connected to a 50mm drain collector.

Each zone valve arrangement will comprise a zone valve, a flow switch and a test and drain valve complete with a strap and padlock.

Where sprinkler main pipework runs within fire escape routes, as defined by the Fire Consultant, the pipework shall be clad in fire resistant insulation to maintain the integrity of the system to that of the fire compartment that it is running through.

210 DESIGN

- Standard: To BS EN 12845.
- Design: Complete the design of the sprinkler system.
- Proposals: Submit drawings, technical information, calculations and manufacturers' literature.

220 EXTENT OF SPRINKLER PROTECTION

All as identified in fire engineering report.

240 PIPELINE SIZES

- Sizing: Calculate sizes to BS EN 12845.
- Method:

The sprinkler pipework will be hydraulically sized in accordance with L.P.C. Standards.

The pipework for the sprinkler installations will be black coated steel medium weight to B.S. 1387 or BS EN 10255.

Valves will be black steel or galvanised heavyweight, depending on the requirements of the local water authority.

The fittings would be malleable iron, cast iron or welded.

From 65 mm diameter and above grooved coupling will be used.

The necessary pipe support brackets for hanging the pipework are included and will comply with the BS EN 12485 requirements for spacing and size of the components. .

- Proposals: Submit.

PRODUCTS

The Boards shall submit proposals for the Sprinkle system to the Consultant, Fire Officer, and building control for comment.

310 WATER SUPPLY

A mains water supply shall provide water to the sprinkler storage tank(s) and be provided as part of the combined fire/domestic water main to the site. The sprinkler water storage shall be contained in the tank room located in the basement of the main hospital building. The sprinkler system installation control valve, sprinkler pumps, valve sets, etc, shall also be housed within the basement tank room.

Standard: To BS EN 12845.
Reliability: Ensure reliability and continuity of water supply.
Quality: Free from suspended fibrous or other matter, which may accumulate in the system pipework.

- Isolating valves on ring main: Interlocking key type.

320 SPRINKLER HEADS

Sprinkler heads shall be pendant bulb type with brass finish in plant and other associated areas, and chrome or white finish in hospital areas.

- Standard: To BS EN 12259-1.
- Sprinkler pattern: As specialist Board schedules and specification.
- Element: As specialist Board schedules and specification.
- Temperature rating: Normally 68C, In areas of high ambient temperatures, sprinkler heads with a higher temperature will be used. .
- Manufacturer: Main reception and Security office..
  - Product reference: As specialist Board schedules and specification.
- Size: As specialist Board schedules and specification.
- Accessories: As specialist Board schedules and specification.
- Corrosion protection: As specialist Board schedules and specification.

330 ALARM DEVICES

All the monitored sprinkler equipment such as pumps valves and flow switches will be wired to an addressable panel. A flow alarm switch will be provided on the alarm valve riser to give remote alarm indication.

A water motor alarm gong will be supplied with the alarm valve. All the stop valves will be completed with a tamper switch.

Each zone valve and flow switch will be connected to an I/O box wired to the addressable panel and fire detection system.

- Standard: To BS EN 12845.
- Type: As specialist Board schedules and specification.
- Manufacturer: As specialist Board schedules and specification.
  - Product reference: As specialist Board schedules and specification.
- Alarm indication: On BMS panel, Fire Panel, Main reception and Security office. .

340 ALARM VALVES

The Sprinkler System will be controlled by wet pipe control valves tested and approved to L.P.C. standards each comprising a 150mm alarm valve with flanged or grooved connections, a 150mm butterfly valve, two 100mm diameter dial pressure gauges and cocks, an alarm trim, a drain valve and butterfly valve and flow switch.

- Standards: To BS EN 12845 and BS EN 12259 -2,-3 and -4.
- Type: Match sprinkler system type.
- Manufacturer: Submit proposals.
  - Product reference: Submit proposals.
- Application: Submit proposals.

350 INDICATOR PANELS

All the monitored sprinkler equipment such as pumps valves and flow switches will be wired to an addressable panel. A flow alarm switch shall be provided on the alarm valve riser to give remote alarm indication.

A water motor alarm gong shall be supplied with the alarm valve. All the stop valves will be completed with a tamper switch.

Each zone valve and flow switch will be connected to an I/O box wired to the addressable panel and fire detection system.

- Standard: To BS EN 12845.
- Indication: Submit proposals.
- Manufacturer: Submit proposals.
  - Product reference: Submit proposals.

360 PRESSURE GAUGES Gauges to be installed as per SHTM/HTM 05 and LPC Rules for Automatic Sprinkler Installations

- Standard: To BS EN 837-1.
- Manufacture: Submit proposals.
  - Product reference: Submit proposals.
- Diameter: 100 mm .
- Scale subdivisions: Submit proposals.
- Material: Submit proposals.
- Connections: Submit proposals.

EXECUTION

The Board shall Test, flush and clean the system as per regulations, SHTM/HTMs, this specification and Fire officer requirements.

620 INSTALLING WATER SUPPLY

- Frost protection (minimum): Maintain water temperature at 4°C.
- Connections supplying water for other services: Separate from hydrant system and water source.

630 INSTALLING ALARM VALVES

- Location: Immediately downstream of the main stop valve.
- Water temperature (minimum): 4°C.

640 INSTALLING SPRINKLER HEADS

- Orientation: Install upright or pendant, with the deflector parallel to the slope of the roof, ceiling or pitch line of the stairs.
- Coverage, location and spacing: To BS EN 12845.
- Corrosion protection: Submit proposals.

650 INSTALLING ALARM DEVICES

- Location: At each installation main control valve set.
- Gong and water motor: Install gong on the outside of an exterior wall.
- Position of gong: Centre line not higher than 6 m above the point of connection to the alarm valve.

660 INSTALLING INDICATOR PANELS

- Position: As agreed with Fire officer and Architect. .

670 INSTALLING PRESSURE GAUGES

Location:

- Immediately downstream of the tail end valve but upstream of any subsidiary stop valve;
- Between the supply pipe stop valve and the check valve on a town main connection; and
- Downstream of outlet check valve and upstream of outlet stop valve on pump supply.

680 IDENTIFICATION AND LABELS

- Generally: To BS 1710, BS 5499-1 and BS EN 12845.
- Location plate: Provide on external wall as close as practical to the entrance nearest the installation main control valve set.
- Signs for stop valves: Provide to the main and any subsidiary stop valves.
- Sprinklers: Mark orifice size on sprinkler body or deflector.

COMPLETION

O& M documentation shall be issued at least three months before completion of any part of the contract.

The contents and format shall be agreed with the Board. The document shall be issued/ uploaded on Acconex.

The Specialist shall provide instruction to the clients Engineers and maintenance staff in the safe operation of all systems and items of equipment for an adequate and reasonable period of time based on the Manufactures recommendations and best practice.
The Specialist shall provide adequate and qualified staff in order to carry out their maintenance and repairs during the defects liability period.

910 FLUSHING

- Operation: Fill the system with water and discharge it via the flushing valves. Flush out debris.

920 TESTING

- Notice (minimum): 3 days.
- Dry pipework: Charge the system with water to a pressure of 2.5 bar (250 kPa). Maintain for 24 h. During this period inspect the system to check that no water leaks at joints or valves.
- All pipework: Charge the system with water to a pressure of 15 bar (1500 kPa). Maintain for 2 h. During this period inspect the system to check that no water leaks at joints or valves.

930 SETTING TO WORK

- Tests: To BS EN 12845.

940 DOCUMENTATION

- Certificate of compliance: Submit.
- Test records: Submit a record of inspections and tests.
- Record drawings: Submit drawings showing location of pipe runs, sprinklers and valves.
- Operation and maintenance instructions: Submit.

Specification Check / Revision Sheet

Project	**RHSC and DCN Edinburgh Hospitals**	Project Number	**G1547**
Service (s)	**Mechanical**	Sheet	**WW AP.1.2.8 SMcK G1547**
Performance Specification Title	**Hot and Cold Water Supply Systems**	Date	**August 2014**
Prepared By	**DW**	Checked By	**SMcK**

Revision Ref.	Date of Revision	Page N$^{o(s).}$	Revision Details	Checked By
FT	December 2013	All	Final Tender	SMcK
FC	July 2014	All	Update for Financial Close	SMcK
FC	August 2014	All	Comments Incorporated	SMcK

RHSC and DCN EDINBURGH
HOT AND COLD WATER SUPPLY SYSTEMS

CONTENTS

1.0	GENERAL INTRODUCTION
2.0	SCOPE
3.0	SPECIFIC EXCLUSIONS
4.0	INTERFACES AND DEMARCATIONS
5.0	APPLICABLE STANDARDS
6.0	DESIGN CRITERIA
7.0	LIAISON
8.0	SYSTEM DESCRIPTION

MATERIALS AND WORKMANSHIP CLAUSES

S10	HOT AND COLD WATER SUPPLY SYSTEMS

1.0 GENERAL INTRODUCTION

Purpose of Document

The development of the design, manufacture, supply, installation, wiring, setting to work and commissioning of the works described in this document shall be undertaken by the Mechanical and Electrical Installer and is referred to in this document as "".

To carry out the development of the design, Project Co. shall obtain the necessary supporting documentation.

This specification relates to the Domestic Hot and Cold water services serving the RHSC-DCN Building and the adjacent Energy Centre.

This specification shall be read in conjunction with all other mechanical and electrical engineering services specifications and the architectural drawings.

Pumps

All pumps shall be fitted with IE2 efficiency motors to EN 60034-30:2009 as standard, and suitable for operation in ambient temperatures of 40 degrees C.

Description of Project

The new facility shall re-provide services from the Royal Hospital for Sick Children, Child and Adolescent Mental Health Service and the Department of Clinical Neurosciences in a single building adjoining the Royal Infirmary of Edinburgh at Little France.

The DCN part of the Facilities will have a physical link with the existing RIE Facilities specifically with the critical care unit.

The building is generally constructed from reinforced concrete.

The basement houses FM support facilities and the main building services heat distribution centres and electrical plant rooms.

Ventilation plantrooms are generally located at roof level and level 2.

A central Energy Centre shall be provided to the South of the hospital housing heating, CHP, standby generation, fuel storage and utility incomers.

2.0 SCOPE

The scope of work covered by this specification shall include, but not be limited to the following:

- Site wholesome water mains.
- The domestic cold water service
- The domestic hot water service.

3.0 SPECIFIC EXCLUSIONS

The following are specifically excluded from the scope of this specification:

- RO Water for Renal use
- RO Water for Endoscopy use
- Fire Hydrant Main
- Water Treatment Equipment

4.0 INTERFACES AND DEMARCATIONS

The domestic hot and cold water services shall be provided as complete working systems serving the RHSC-DCN Building. Project Co. shall provide information to other parties including for power supplies and BMS interfaces.

The site water mains shall be provided as complete working systems serving the RHSC-DCN Building and Energy Centre.

5.0 APPLICABLE STANDARDS

All elements of the works shall be in accordance with the requirements of current legislation, regulations and industry standards unless otherwise stated.

The domestic hot and cold water systems shall accord with all appropriate Scottish Hospital Technical Memoranda, Codes of Practice and relevant British and European Standards, Scottish Water Regulations *(Byelaws)* and to the approval of the local Water Authority.

The site wholesome water mains shall comply with the requirements of Water for Scotland
2nd Edition 2007, and to the requirements of the Water Authority.

6.0 DESIGN CRITERIA

General the domestic hot and cold water systems shall comply with the Scottish Water Regulations and current Codes of Practice

7.0 LIAISON

Project Co. shall include for liaison with:-

Health and Safety Professionals. As well as the Health and Safety requirements of *Parts A, B and C of this specification,* Project Co. shall include for close liaison with Health and Safety professionals including the Hospital Board's Health and Safety Advisors and the CDM Co-ordinator and shall comply with the CDM Regulations and all Health and Safety Regulations.

Other Specialist Project Co. shall liaise with other Specialists as necessary to ensure that all interfaces between the domestic hot and cold water supply installations and other systems are allowed for.

The Local Water Supply Undertaker. Project Co. shall liaise with the Local Water Supply Undertaker or their licensed agents to ensure that all aspects of the installation comply with the Scottish Water Regulations.

8.0 SYSTEM DESCRIPTION

Incoming Water Supply

Wholesome cold water will be derived from the separate incoming water main supply entering the basement tank room. The supply will be capable of isolation by valves within the building. A water meter will be incorporated on the supply within the tank room with direct reading and a BMS interface.

The domestic water main shall feed the raw cold water break tanks in the basement plantroom. A connection shall also be provided for the landscape/ planter cold water storage tank. Duty/ standby transfer pumps will pump water to the main run water storage tanks in the roof plantroom.

Cold Water Storage Tanks

Bulk potable quality water storage tanks will be located within the roof plant room. The tanks will store 100% of the total main hospital water storage.

The tanks will be insulated and complete with raised ball valve housings, self-draining bases, flushing drain and all necessary connections to comply with Water Authority requirements. Each tank shall have a central division plate.

Ball valves shall be of the delayed action type valve.
Separate connections will be made from the main cold water storage tank header to the booster sets.

The whole of the domestic water services installation will be boosted in pressure to ensure adequate flow at outlets points, such as showers, etc.

Water Filtration

Twin filtration plant in compliance with SHTM 04-01 shall be served from the 2 No. break tanks and shall supply filtered water to the 2 No. main filtered water storage tanks.

Wholesome Water Booster Sets

Two separate packaged wholesome (potable) grade water booster sets will be provided within the roof plantroom and one in the basement tank room.

Each booster set will comprise:

- Dedicated control panel
- Multiple variable speed duty pumps to maintain a constant discharge pressure.
- Accumulator vessel

Laboratory Cold Water Storage Tanks

Category 5 cold water storage tanks will be located within the roof plantroom.

Water Booster set for Dental Chairs

A small packaged booster set with integrated break tank shall be provided to serve the dental chairs in the Children's Hospital. The unit shall be suitable for locating in a cupboard.

Domestic Cold Water System

From the bulk storage tanks, the wholesome boosted cold-water service will be routed to the basement heat stations to serve the calorifiers and rise in vertical riser to feed the various departments.

Subject to compliance with SHTMs or with Board approval, cold water service outlets which may be subject to misuse, or for clinical convenience, or temperature maintenance, and BREEAM compliance, may use proximity switching, timed flows, automatic flushing system for legionella control shut off valves and flow regulation to serve this purpose.

Flexible Supply Hoses for Final Connections

No flexible hoses (or tails) connections shall be used.

Hot Water Service Installation

General

All hot water supply systems will be designed and installed to meet the requirements of SHTM 04-01 Part A and B.

Hot Water System

The hot water distribution system will be designed for 60ºC flow and 55ºC return circulating temperature.

Domestic Hot Water (DHWS) will be generated and stored utilising high output/ low storage calorifiers. The DHWS plant and distribution system will be fed from the boosted water system, and thus be pressurised.

The DHWS plant will be directly heated from the main primary LTHW heating circuit from the Energy Centre. The storage temperature will be controlled through the BMS by 2-port control valves on the primary heating system, along with 2-port direct acting control valves to provide protection override in the case of high hot water flow temperatures.

The DHWS plant system will be capable of achieving higher storage temperatures for carrying out a pasteurising process to minimise contamination from Legionella bacterium within the storage buffer vessel. Each storage buffer vessel and plate heat exchanger will be isolated from the distribution system while the process is carried out.

The DHWS distribution system will be configured with a pumped return to maintain temperatures within the system in accordance with SHTM 04-01. The pumped return system will minimise "dead legs" and reduce water consumption by providing the correct temperature of water at the outlet with minimum delay.

The system will have isolating valves generally as the cold water system. In addition, the return water pipework will be provided with valves that isolate and automatically regulate the flow rate, in order to maintain satisfactory temperatures throughout the system.

The hot and cold water system pressures will be equalised at each service outlet for successful blending of hot and cold water through anti-scalding devices prior to use.

The anti scalding devices will be used throughout the hospital where service outlets provide water for personal hygiene washing. Designated outlets will use unmixed hot water at system temperatures where utensils or garment washing is required.

Subject to compliance with the SHTMs or with Board approval, hot water service outlets which may be subject to misuse or for clinical convenience may use proximity switching, timed flows and flow regulation for water conservation purposes as described for cold water services.

Separate water heaters shall be provided for the laboratories.

Thermostatic Mixing Valves

These valves are provided on each sanitary fitting that requires the hot water delivery temperature to be limited to a safe working maximum. All valves shall comply with the requirements of NHS Specification DO8; NHS Health Guidance Note (HGN) entitled “Safe Hot Water and Surface Temperatures” and be a WRAS listed pattern.

Where the thermostatic mixing valves are not provided the Board shall affix a permanent label adjacent to the unprotected hot tap clearly stating “VERY HOT WATER”.

Valves shall be factory pre-set to provide maximum delivery water temperatures as follows:

Bidet	-	38°C
Shower	-	41°C
WHB	-	41°C
Bath	-	44°C

Upon completion of the installation, each valves performance shall be checked in accordance with the requirements of Section 5 of the HGN for commissioning, including all necessary paperwork.

HWS Secondary Pumps

All the domestic hot water systems shall be provided with return water circulation pumps. These shall be run continuously with the standby pump supplied loose to allow removal and replacement of operational unit in the case of a fault.

Thermostatic Balancing Valves

Each HWS return loop shall be provided with a thermal balancing valve to ensure the HWS return temperature is maintained at 55°C.

The tamper-proof multi-function thermostatic balancing valves shall be suitable for use in domestic hot water circulation systems and shall include drain point, temperature gauge point and automatic disinfection point.

The valves shall provide a thermal balance in the hot water installation by keeping a constant temperature in the system, thus limiting the flow in the circulation pipes to the minimum required level. The valves shall have a minimum flow rate no greater than 0.02 litres/second.

Water Meters

Water meters shall be provided as indicated on the drawings to measure cold water consumption to various systems and parts of the building.

DOMESTIC WATER FLOW REGULATION

To reduce the overall water consumption of the development, all sanitary fittings shall be furnished with flow regulating devices to both hot and cold supplies to the fitting. These devices shall be factory fitted into the outlet side of the fitting isolating valves, and shall regulate the flow (and thus pressure) of each fitting.

MATERIAL & WORKMANSHIP CLAUSES

S10 HOT AND COLD WATER SUPPLY SYSTEMS

GENERAL

All domestic stored water shall be of wholesome quality.

The main domestic water supply tanks shall be sized for 24hr storage unless otherwise directed by the Board.

The tanks shall be joined at a header arrangement with each tank capable of being isolated for repair or maintenance.

From the raw cold water storage tanks, the water will pass through the filtration plant to the filtered clean water storage tanks. A boosted cold water supply from the tanks will be routed via the main distribution routes to the vertical risers to feed the various departments. In the basement, the filtered (potable) boosted cold water service will feed un-vented HWS calorifiers in the heat stations, and a number of direct connections to demand points within the building, including system pressurisation units, and dedicated water service systems storage tanks for laboratories, via type AB air gaps for prevention of backflow.

All specific department areas will be provided with isolation provision, with draining down facilities for maintenance and shutdown.

All main distribution and dropper connections will be provided with isolating valves, with local isolation valves installed to isolate and shut down individual ward/department areas.
It should be noted that domestic supplies can only connect to outlets and equipment that are suitable for potable quality water supplies, in accordance with the Scottish Water Byelaws.

All items of hot and cold water plant and system controls must be capable of being fully interrogated by the building management system through the independent network protocol.

The hot water distribution system will be designed for 60ºC flow and 55ºC return circulating temperature.

Anti scalding devices shall be used throughout the hospital where service outlets provide water for personal hygiene washing. Designated outlets will use unmixed hot water at system temperatures where utensils or garment washing is required.

110 INCOMING WATER SUPPLY

- Water company: Scottish Water/Business Stream
- Volume flow rate: 25 l/s from 1No incoming main supply for fire hydrants.
- Position of incoming mains water supply: As indicated on the drawings. The main supply shall be taken from the existing Scottish Water main in Craigmillar Castle Road.

Site water mains shall be installed in accordance with Water for Scotland 2nd Edition and NJUG requirements for utility .apparatus with regards to depth, colour coding, identification markers, and position, and to the requirements of Scottish Water. Site water mains shall be ductile iron suitable for the site contaminated ground conditions and approved by Scottish Water. All backfill shall be from a clean source. A water meter linked to the BMS will be incorporated with direct reading and a BMS interface the both incoming main supply at the location identified by Scottish Water. Leak detection meters shall be provided at the boundary and at the entry point to the basement on the domestic water main. All water meters will be fitted with isolation valves and be linked to the BMS.

130 PUMPED COLD WATER SUPPLY SYSTEM

Bulk wholesome quality water storage tanks and break tanks will be located within the roof plantroom of the hospital building. The tanks will store 100% of the total main hospital water storage.

The whole of the domestic water services installation will be boosted in pressure to ensure adequate flow at outlets points, such as showers, etc. duplicate packaged wholesome water grade booster sets will be provided within the tank room.

A separate general purpose water booster set will serve Category 5 outlets.
Each booster set will comprise:-
Dedicated control panel
Multiple variable speed duty pumps to maintain a constant discharge pressure including a standby pump
Accumulator vessel

Water supplies for vending machines, ice makers and chilled drinking water points shall be installed with valved-off connections for final connection by others. All incoming water for wholesome storage will pass through a filtration system with a 0.5 micron capacity.

The filtration plant will be in duplicate and served by duplicate break tanks of one third of total capacity.

Each filtration plant will be capable of supplying full peak water demand to the bulk cold water storage tanks.

- Type: Flooded suction or suction lift to directly pressurize hot and cold water systems.
- Water meters: As shown on drawings.
- Pressure booster sets: As section Y20.
- Pumps: As schedule.

- Storage tank or cistern: Glass fibre reinforced cisterns, as section Y21.
  - Accessories: As schedule and requirement for wholesome water.
- Pipelines:
  - Below ground: As section Y10 and NJUG.
  - Above ground: As section Y10.
- Pipeline ancillaries: As section Y11.
- Thermal insulation:
  - Pipelines: As section Y30.
  - Tanks: As section Y30.
- Vibration isolation: Inertia bases, to acoustic consultant recommendations.
- Sanitary appliances: All taps, shower mixers, and sanitary ware shall be as Architects schedules.
- Drinking water outlets: All domestic water shall be wholesome. Drinking water points shall be shown on drawings..
- Flush control devices: As schedules.
- Water coolers: As schedule and drawings.
- Controls: All items of Cold water plant and system controls must be capable of being fully interrogated by the building management system through the independent network protocol..
- Accessories: As schedule.
- Completion:
  - Cleaning and chemical treatment: Flushing and chemical treatment, as section Y12.
  - Plant and equipment identification: As section Y32 and as SHTM/HTM 04 .
  - Commissioning: Commissioning of cold water supply systems, as section Y50 and as SHTM/HTM 04.

160 INDIRECT HOT WATER STORAGE SUPPLY SYSTEM

Hot water storage shall be provided by high output/ low storage calorifiers. The DHWS distribution system will be configured with a pumped return to maintain temperatures within the system in accordance with SHTM/HTM 04-01, associated HGN Safe Hot Water and Surface Temperatures and SHTM/HTM 04-01. The pumped return system will minimise dead legs and reduce water consumption by providing the correct temperature of water at the outlet with minimum delay.

Capacity: As schedule.
Primary heat source: LTHW system Comprising of dual fuel hot water boiler and CHP units, as section T20.

- Primary: Sealed.
- Storage unit: Hot water storage shall be via the Storage calorifiers supplied with the plate heat exchangers.
- Pumps:
  - Primary hot water supply: Close coupled in line, as section Y20. All parts in touch with the wet system shall be stainless steel.
  - Secondary hot water supply: Close coupled in line, as section Y20 All parts in touch with the wet system shall be stainless steel.
- Pipelines: As section Y10.
- Pipeline ancillaries: As section Y11.
- Thermal insulation:
  - Pipelines: As section Y30.
  - Cylinders: As schedule.

- Controls: All items of Hot water plant and system controls must be capable of being fully interrogated by the building management system through the independent network protocol.
- Sanitary appliances: All taps, shower mixers, and sanitary ware shall be as Architect's schedules.
- Accessories: As schedule.
- Completion:
  - Cleaning and chemical treatment: Flushing and chemical treatment, as section Y12.
  - Plant and equipment identification: As section Y32.
  - Commissioning: Commissioning of Hot water supply systems, as section Y50 and as SHTM/HTM 04.

SYSTEM PERFORMANCE

The hot and cold water supply system shall be install, flushed, cleaned, tested and commissioned as per Water Regulations SHTMs and HTMs. Where any standards or documents contradict one another Project Co. shall contact the Board for further guidance.

220 COLD WATER SUPPLY

- Incoming mains water supply:
  - Site factors: The water mains from the external water main shall run separately in the ground. The main shall enter the basement of the RHSC-DCN Building and run at high level in the basement corridor to enter the basement cold water storage tank room. The supply will connect to the duplicate break tanks.

A pumped supply shall feed the bulk storage tanks in the roof plantroom.

From the bulk storage tanks, the wholesome boosted cold-water service will be routed via the main distribution routes and vertical risers to feed the various departments. See drawings for details.

- Type of system: Pumped from a storage tanks.
- Design parameters: To SHTM/HTM 04-01.
- Daily consumption: As schedule.
- Storage capacity: The main domestic water supply tanks shall be sized for 24hr storage.

250 PIPELINE SIZES

- Sizing: Calculate sizes to meet simultaneous demand for the building in accordance with BS 6700 Appendix D or BS EN 806-3. Submit proposals.
- Performance:
  - Water velocity (maximum): 1.3 m/s for hot water and 1.5 m/s for cold water.
  - Filling time (maximum) for cold water storage cistern: 8 hours.

PRODUCTS

Project Co. shall supply and install services and equipment to perform as per specification. The Board shall submit details of all mechanical equipment for comment and place orders in a timely fashion to ensure delivery as per programme.

Where a particular manufacture is specified, the Board shall include for that manufacturer. Where considered appropriate, provide for equivalent standard alternatives to be offered for consideration. This must be done in a timely manner and Project Co. shall provide all details including but not limited to:

- detailed description
- Cost comparison
- Technical comparison
- References to standards
- References to SHTM/HTMs

310 DEZINCIFICATION

- Fittings, pipelines and equipment located below ground or in concealed or inaccessible locations: Resistant to dezincification, e.g. gunmetal.

320 WATER METERS

Water meters shall be installed as indicated on drawings. Stool pieces between isolating valves will be provided for temporary removal of the meters during the flushing of the system or when meters are removed for repair.

- Standard: To ISO 4064-1.
- Type: In-line meters. Shall be capable of being read by the clients BMS system. .
- Manufacturer: As schedule.
  - Product reference: As schedule.
- Size: To suit service.
- Pressure class: As schedule.
- Temperature class: To suit service.
- Metrological class: As schedule.
- Connections: As schedule.
- Indicating device: Type 2 - digital.
- Features: Pulsed output for remote monitoring.
- Accessories: To BS EN 14154-2.

480 FLUSH CONTROL DEVICES

All taps, shower mixers, and Sanitary ware shall be as Architect's schedules.

- Manufacturer: All taps, shower mixers, and sanitary ware shall be as Architect's schedules.
  - Product reference: All taps, shower mixers, and sanitary ware shall be as Architect's schedules.
- Flush rate: All taps, shower mixers, and sanitary ware shall be as Architect's schedules.
- Water supply valve: All taps, shower mixers, and sanitary ware shall be as Architect's schedules.

- Sensor unit:
  - Material: All taps, shower mixers, and sanitary ware shall be as Architect's schedules. Movement detector: All taps, shower mixers, and sanitary ware shall be as Architect's schedules. Power supply: All taps, shower mixers, and sanitary ware shall be as Architect's schedules.

490 WATER COOLERS

- Manufacturer as Architects Schedules

Water coolers, drinks and vending machines shall be supplied and installed by others.
Project Co. shall supply services to the coolers and vending machines at locations shown on drawings and agreed with the Board.

- Product reference: Supplied by others.
- Type: Supplied by others.
- Flow rate: Supplied by others.
- Temperature of delivered water: As SHTM/HTM 04-01.
- Water inlet: As required.
- Power supply: As required.

EXECUTION

Project Co. shall ensure all works carried out shall be done is a safe manner and comply with Health and Safety Regulations. This shall include clean and tidy working and working in confined spaces. Due to the size of the water systems being installed all pressure testing and commissioning equipment shall be cleaned and chlorinated before each use. This is to prevent the systems from being contaminated with pseudomonas.

620 INSTALLATION GENERALLY

- Installation: To BS 6700.
- Performance: Free from leaks and the audible effects of expansion, vibration and water hammer.
- Fixing of equipment, components and accessories: Fix securely, parallel or perpendicular to the structure of the building.
- Preparation: Immediately before installing tanks and cisterns on a floor or platform, clear the surface completely of debris and projections.
- Corrosion resistance: In locations where moisture is present or may occur, avoid contact between dissimilar metals by use of suitable washers, gaskets, and the like.

630 INSTALLING WATER METERS

- Standards: To BS EN 14154-2.
- Interconnection to Building Management and Monitoring System (BMMS): Required.

660 UNVENTED HOT WATER STORAGE DISCHARGE PIPES

- Fall (minimum): 1 in 80.
- Discharge: Via an air break and tundish.
  - Size: At least the diameter of the outlet of the safety device.
  - Tundish discharge: At least one diameter larger than the outlet of the safety device.
  - Discharge point: As shown on drawings.

COMPLETION

Project Co. shall protect the system from damage or interference during the works.

Project Co. shall Test, flush and clean the system as per section Y12, Y50, SHTM/ HTM's and TR/20.

Project Co. shall submit O&M's as required by The Board

Project Co. shall provide training as per section Y12, Y40 & Y50.

Project Co. shall provide spares as per section Y12, Y40 & Y50.

Project Co's. defects and liability period shall be as the contract prelims.

910 HYDRAULIC PRESSURE TESTING OF HOT AND COLD WATER SUPPLY SYSTEMS

- Standard: To BS 6700.
- Notice (minimum): 1 week.
- Pressure: 1.5 times working pressure.
- Duration of test: 1 h.

980 DOCUMENTATION

O& M documentation shall be issued at least three months before completion of any part of the contract.

The contents and format shall be agreed with the Board. The document shall be issued/uploaded on ZUTEC.

Project Co. shall provide instruction to the clients engineers and maintenance staff in the safe operation of all systems and items of equipment for an adequate and reasonable period of time based on the manufactures' recommendations and best practice. Project Co. shall provide adequate and qualified staff in order to carry out their maintenance and repairs during the defects liability period.

990 OPERATING TOOLS

- Tools: Supply tools for operation, maintenance and cleaning purposes.
- Keys: Supply keys for valves and vents.

Specification Check / Revision Sheet

Project	**RHSC and DCN Edinburgh Hospitals**	Project Number	**G1547**
Service (s)	**Mechanical**	Sheet	**WW AP.1.2.13 SMcK G1547**
Performance Specification Title	**Natural Gas Supply System**	Date	**August 21014**
Prepared By	**MM**	Checked By	**SMcK**

Revision Ref.	Date of Revision	Page N$^{o(s).}$	Revision Details	Checked By
FT	December 2013	All	Final Tender	SMcK
FC	July 2014	All	Update for Financial Close	SMcK
FC	August 2014	All	Comments Incorporated	SMcK

RHSC and DCN EDINBURGH
NATURAL GAS SUPPLY SYSTEMS

CONTENTS

1.0 GENERAL INTRODUCTION

2.0 SCOPE

3.0 SPECIFIC EXCLUSIONS

4.0 INTERFACES AND DEMARCATIONS

5.0 APPLICABLE STANDARDS

6.0 DESIGN CRITERIA

7.0 LIAISON

8.0 SYSTEM DESCRIPTION

MATERIALS AND WORKMANSHIP CLAUSES

S32 NATURAL GAS SUPPLY SYSTEMS

1.0 GENERAL INTRODUCTION

Purpose of Document

The development of the manufacture, supply, installation, wiring, setting to work and commissioning of the works described in this document shall be undertaken by the installer and is referred to in this document as “Project Co”.

To carry out the development of the design, the Specialist shall obtain the necessary supporting documentation.

This specification relates to the mechanical services related to the gas supply system.

This specification shall be read in conjunction with all other mechanical and electrical engineering services specifications and the architectural drawings.

Description of Project

The new facility shall re-provide services from the Royal Hospital for Sick Children, Child and Adolescent Mental Health Service and the Department of Clinical Neurosciences in a single building adjoining the Royal Infirmary of Edinburgh at Little France.

The DCN part of the Facilities will have a physical link with the existing RIE Facilities specifically with the critical care unit.

The building is generally constructed from reinforced concrete.

The basement houses FM support facilities and the main building services heat distribution centres and electrical plant rooms.

Ventilation plantrooms are generally located at roof level and level 2.

A central Energy Centre shall be provided to the South of the hospital housing heating, CHP, standby generation, fuel storage and utility incomers.

2.0 SCOPE

The scope of work covered by this Specification shall include, but not be limited to the following:-

- Gas supply system from incoming meter outlet to final points of consumption

3.0 SPECIFIC EXCLUSIONS

The following is specifically excluded from the scope of this Specification:-

- Automatic controls & BMS
- Fire detection and alarm system

4.0 INTERFACES AND DEMARCATIONS

The gas supply system shall be provided as a complete working system.

Project Co. shall provide information to other parties for power supplies and fire alarm system interfaces.

5.0 APPLICABLE STANDARDS

All elements of the works shall be in accordance with the requirements of current legislation, regulations and industry standards unless otherwise stated.

The gas supply system shall accord with all appropriate Scottish Health Technical Memoranda, Codes of Practice and relevant British and European Standards.

The equipment supplied shall conform with all relevant standards and regulations in force. The equipment shall be supplied with relevant Declarations of Conformity to certify compliance with the EMC directive 89/336/EEC-92/31/EEC and the Machinery Safety Directive 89/392/EEC-91/368/EEC-93/44/EEC. Also the equipment and installation shall comply with all relevant statutory requirements in force at the time.

The gas supply and distribution systems shall comply with the relevant clauses of BS6644, IGE Guidance, Clean Air Act, and descriptions and requirements set out below.

6.0 DESIGN CRITERIA

Electricity Supply Characteristics

LV power characteristics: 400/230 V, 3-phase, 50 Hz, 230 V, 1-phase, 50 Hz.

Gas pressures

Low pressure supply at outlet of meter: 65mbar

7.0 LIAISON

Project Co. shall include for liaison with:-
Health and Safety Professionals. As well as the Health and Safety requirements of this specification, Project Co. shall include for close liaison with Health and Safety professionals including the Hospital's Health and Safety Advisors and the CDM Co-ordinator and shall comply with the CDM Regulations and all Health and Safety regulations.

Specialist Installers. Project Co. shall liaise with other specialist Installers as necessary to ensure that all interfaces are allowed for.

Building Control. Project Co. shall liaise with, and adhere to, the requirements of the Building Control Officer.

Any other member of the Project and Board teams concerned with the planning and administration of the gas supply system.

8.0 SYSTEM DESCRIPTIONS

Gas Mains Installation

The gas supply for the RHSC-DCN Building shall run from Old Dalkeith Road to a new meter position adjacent the Energy Centre oil tanks and run as a medium pressure supply (65mbar) in a soft dig trench alongside other site piped services to the Energy Centre.

All meters shall provide pulsed outputs for monitoring of the BMS.

Energy Centre

The medium pressure supply into the Energy Centre shall be taken to the heating boilers and CHP unit for direct use at this pressure, thus avoiding the need for individual plant gas boosters. All gas/dual fuel boilers and CHP plant shall be individually metered and linked to the BMS system.

Gas pipework below ground shall be medium density polyethylene PE80 with fusion joints. Pipework above ground shall be in heavy duty mild steel with screwed/welded joints.

S32 NATURAL GAS SUPPLY SYSTEM

110 INCOMING GAS SUPPLY

- Gas transporter: Medium pressure main.
- Gas supplier: Smart Metering Systems UK Gas Connection.

120 NATURAL GAS SUPPLY SYSTEM

Individual supply branches shall be complete with a manual isolating valve and gas solenoid valve as required on the drawings and within the specification.

All gas pipework shall be routed through ventilated service routes to prevent the build up of gas in the event of any leak.

Project Co. shall supply, install and commission an energy centre automatic gas safety system comprising electro-thermal links over each boiler burner and CHP unit (fire melting temperature as advised by manufacturers), wired to emergency knock off buttons at each exit door to each plant area.

The system shall include natural gas detection sensors, the incoming gas solenoid valve and an interlink with the fire control panel.

The complete gas safety system shall be compliant with BS 5839 as a minimum requirement.

The gas safety circuit shall also interface with the oil fuel safety circuit where serving the boiler plant.

The safety valves shall be suitable for the Gas system in which they are installed.

Safety valves shall be provided in accordance with BSEN161.

Activation of the emergency knock off buttons, detection by any of the thermal links or natural gas detection sensors shall close the associated shut off valve. This shall also close the associated oil shut off valves. The systems shall be interlinked with the fire alarm and BMS installations as detailed in the controls specification *and include an automatic reset facility*.

- Metering: Secondary gas meters shall be installed as per drawings.
- Gas pipelines: Low pressure pipelines.
- Gas valves: Valves shall be installed as per regulations, SHTMs and as shown on drawings.
- Gas equipment: As per regulations, SHTMs and as shown on drawings.
- Gas outlets: Combined heat and power plant, as section T25 and Gas fired boiler, as section T20.
- Completion:
  - Plant and equipment identification: As section Y32

PRODUCTS

All elements of the work shall be in accordance with the requirements of current legislation, regulations and industry standards.

The natural gas installation shall also comply to the SHTM, code of practices and relevant British standards.

A proposed drawing list shall be submitted by .

Project Co. shall provide working drawings for the installation and issue them for comment before work commences.

310 SECONDARY GAS METERS

Secondary Gas meters shall be installed as detailed on drawings and in this specification. Gas meters shall be installed with isolation valves for maintenance.

- Standard:
  - Gas meters: To BS EN 1359.
  - Unions and adaptors: To BS 746.
  - Low pressure meters: In accordance with IGE/GM/6.
  - Electrical connections: In accordance with IGE/GM/7.

- Project Co. shall submit technical details of the proposed meter.
- Accessories: Pulsed output for BMS monitoring.
- Housing type: To suit gas meter type.

330 LOW PRESSURE GAS SUPPLY PIPELINES

Over ground pipes 15 mm to 50 mm nominal size inclusive (internal) shall be black mild steel to BS1387 heavyweight grade, screwed fittings if installed in a ventilated space, otherwise fully welded. Over ground pipes greater than 50mm shall be Black mild steel to BS1387 heavyweight grade welded throughout its length. All above ground natural gas pipe shall be painted yellow ochre.

- Standards: To BS EN 1775 and in accordance with IGE/UP/2.
- Materials: Steel, heavy weight.

335 INDUSTRIAL GAS SUPPLY PIPELINES

- Standards: In accordance with IGE/UP/2.
  - Up to and including 0.5 bar: To BS EN 1775.
  - From 0.5 bar up to 60 bar: To EN 15001-1.
- Material: Indoor above ground shall be Black mild steel to BS1387 heavyweight grade welded throughout its length and painted yellow ochre, Underground pipe shall be Yellow medium density polyethylene thick wall pipes (PE80).
- Jointing method: Steel pipe wielded throughout its length, Fusion jointing of polyethylene.

340 GAS SOLENOID VALVES

Project Co. shall supply, install and commission an energy centre automatic gas safety system comprising electro-thermal links over each boiler burner and CHP unit (fire melting temperature as advised by manufacturers), wired to emergency knock off buttons at each exit door to each plant area. The system shall include battery back up to maintain the solenoid valves open in the event of loss of power.

The system shall include natural gas detection sensors, the incoming gas solenoid valve and an interlink with the fire control panel.

The complete gas safety system shall be compliant with BS 5839 and BS EN 161 as a minimum requirement.

The gas safety circuit shall also interface with the oil fuel safety circuit where serving the boiler plant. Should the gas safety circuit be activated both the related gas and oil safety valves shall shut.

Activation of the emergency knock off buttons, detection by any of the thermal links or natural gas detection sensors shall close the associated shut off valve. The systems shall be interlinked with the fire alarm and BMS installations as detailed in the controls specification.

- Manufacturer: to submit proposals.
  - Product reference: to submit proposals.
- Type: to submit proposals.
- Mounting: In Line
- Speed of opening: Submit proposals.
- Connections: Manufacturer's standard.
- Pressure rating to BS EN 1333: Suitable for gas pipe pressure.
- Solenoid supply voltage: Submit proposals.
- Actuation method: Sensor above each burner, knock of button and fire alarm.
- Reset: Manual.
- Accessories: Submit proposals.

390 GAS PROVING SYSTEMS & EMERGENCY VALVES

Project Co. shall supply and install, in the locations shown on the drawings, a combined gas proving system and emergency shut off valve on the natural gas supplies.

The system shall provide an automated means of proving the integrity of the downstream natural gas installation prior to opening the emergency shut off valve on a regular and routine basis.

The system shall be key switch operated and be interlinked with the BMS system in order to repeat and log alarm conditions.

- Manufacturer: to submit proposals.
  - Product reference: to submit proposals.
- Pressure application: Detection of positive pressure changes.
- Accessories: Submit proposals.

400 SAFETY AND CONTROL DEVICES

- Standard: To BS EN 13611.

410 BALL VALVES, MANUALLY OPERATED

Valve shall be suitable for type of gas pipe in which they are installed.

- Standard: To BS EN 331.
- Type: Lever operated.
- Manufacturer: choice.
  - Product reference: choice.
- Material: Bronze or dezincification resistant brass (DZR).
- Connections: Threaded.

420 PLUG VALVES, CAST IRON

Valve shall be suitable for Medium pressure gas main

- Standard: To BS 5158.
- Type: Regular.
- Manufacturer: choice.
  - Product reference: choice.
- Connections: To suit pipework.
- Options: Wrench.

425 PLUG VALVES, STEEL

Valve shall be suitable for Medium pressure gas main

- Standard: To BS 5353.
- Type: Regular.
- Manufacturer: choice.
  - Product reference: choice.
- Connections: To suit size of pipework.

430 PLUG VALVES, TAPER

Valve shall be suitable for type of gas pipe in which they are installed.

- Standard: To BS 1552.
- Type: choice.
- Manufacturer: choice.
  - Product reference: choice.
- Material: Dezincification resistant brass (DZR) copper alloy
- Connections: Threaded.

EXECUTION

Project Co. shall ensure all works carried out shall be done is a safe manner and comply with Health and Safety regulations. This shall include clean and tidy working and working in confined spaces.

620 INSTALLATION GENERALLY

- Installation: In accordance with IGE/UP/10 and ICE/UP/2.

625 GAS SAFE REGISTRATION REQUIREMENTS

- Type of service: Non-domestic.
- Type of gas: Natural gas.
- Area of work: The installation, testing and commissioning of the natural gas system shall be undertaken by a registered installer. A copy of the installer's certificate shall be attached to the test and commissioning documents.

630 INSTALLING GAS METERS

- Secondary gas meters:
  - Low pressure: In accordance with BS 6400-1.
  - Medium pressure: In accordance with BS 6400-2.
  - Non-domestic: In accordance with IGE/GM/8.

650 INSTALLING GAS PIPELINES

- Installation: In accordance with BS EN 1775.

660 INSTALLING INDUSTRIAL GAS PIPELINES

- Standard: In accordance with EN 15001-1.

COMPLETION

Project Co. shall protect the system from damage or interference during the works.

Project Co. shall submit O&M's.

Project Co's. defects and liability period shall be as the contract.

930 COMMERCIAL AND INDUSTRIAL GAS INSTALLATIONS

- Soundness testing and purging: In accordance with IGE/UP/1.
- Testing, purging and commissioning pipelines: In accordance with BS EN 1775 and BS EN 15001 2.
- Commissioning gas fired plant: In accordance with IGE/UP/4

940 PRESSURE TESTING OF NATURAL GAS SUPPLY SYSTEMS

- Notice (minimum): 1 week.
- Pressure: 1.5 times working pressure.
- Duration of test: 1 h.

960 DOCUMENTATION

O& M documentation shall be issued at least three months before completion of any part of the contract.

The contents and format shall be agreed with the Board. The document shall be issued/uploaded on Aconex.

The Specialist shall provide instruction to the clients Engineers and maintenance staff in the safe operation of all systems and items of equipment for an adequate and reasonable period of time based on the Manufactures recommendations and best practice.

The Specialist shall provide adequate and qualified staff in order to carry out their maintenance and repairs during the defects liability period.

970 OPERATING TOOLS

- Tools: Supply tools for operation, maintenance and cleaning purposes.
- Valve keys: Supply keys for valves and meter housing.
  - Quantity: 4 of each type.

Specification Check / Revision Sheet

Project	**RHSC and DCN Edinburgh Hospitals**	Project Number	**G1547**
Service (s)	**Mechanical**	Sheet	**WW AP.1.2.6 SMcK G1547**
Performance Specification Title	**Cooling Systems**	Date	**August 2014**
Prepared By	**MM**	Checked By	**SMcK**

Revision Ref.	Date of Revision	Page N$^{o(s).}$	Revision Details	Checked By
FT	December 2013	All	Final Tender	SMcK
FC	July 2014	All	Update for Financial Close	SMcK
FC	August 2014	All	Comment Incorporated	SMcK

RHSC and DCN EDINBURGH
COOLING SYSTEMS

CONTENTS

1.0	GENERAL INTRODUCTION
2.0	SCOPE
3.0	SPECIFIC EXCLUSIONS
4.0	INTERFACES AND DEMARCATIONS
5.0	APPLICABLE STANDARDS
6.0	DESIGN CRITERIA
7.0	LIAISON
8.0	SYSTEM DESCRIPTION

MATERIALS AND WORKMANSHIP CLAUSES

T50	CHILLED WATER SYSTEM
T60	CENTRAL REFRIGERATION PLANT

1.0 GENERAL INTRODUCTION

Purpose of Document

The manufacture, supply, installation, wiring, setting to work and commissioning of the works described in this document shall be undertaken by the Mechanical and Electrical Installer and is referred to in this document as "".

To carry out the development of the design, Specialist shall obtain the necessary supporting documentation.

This specification shall be read in conjunction with all other mechanical and electrical engineering services specifications and the Architectural drawings.

Fans & Pumps

All fan assemblies shall incorporate fan impeller and motors selected to provide the most energy efficient solution conforming to Section 6 regulations. All fans and pumps shall be fitted with IE2 efficiency motors to EN 60034-30:2009 as standard, and suitable for operation in ambient temperatures of 40 degrees C.

Description of Project

The new facility shall re-provide services from the Royal Hospital for Sick Children, Child and Adolescent Mental Health Service and the Department of Clinical Neurosciences in a single building adjoining the Royal Infirmary of Edinburgh at Little France.

The DCN part of the Facilities will have a physical link with the existing RIE Facilities specifically with the critical care unit.

The building is generally constructed from reinforced concrete.

The basement houses FM support facilities and the main building services heat distribution centres and electrical plant rooms.

Ventilation plantrooms are generally located at roof level and level 2.

A central Energy Centre shall be provided to the South of the hospital housing heating, CHP, standby generation, fuel storage and utility incomers.

2.0 SCOPE

The scope of work covered by this Specification shall include, but not be limited to the following:-

- Cooling System, comprising:

  Chillers, pumps, pressurization units. Pipework, valves and ancillaries, cooling terminal devices.

3.0 SPECIFIC EXCLUSIONS

The following is specifically excluded from the scope of this Specification:-

- BMS and automatic control systems

4.0 INTERFACES AND DEMARCATIONS

The cooling system shall be provided as a complete working system serving the RHSC-DCN Building.

Project Co. shall provide information to other parties for power supplies and fire alarm system interfaces.

5.0 APPLICABLE STANDARDS

All elements of the works shall be in accordance with the requirements of current legislation, regulations and industry standards unless otherwise stated.

The cooling system shall accord with all appropriate Scottish Health Technical Memoranda, Codes of Practice and relevant British and European Standards.

The equipment supplied shall conform with all relevant standards and regulations in force. The equipment shall be supplied with relevant Declarations of Conformity to certify compliance with the EMC directive 89/336/EEC-92/31/EEC and the Machinery Safety Directive 89/392/EEC-91/368/EEC-93/44/EEC. Also the equipment and installation shall comply with all relevant statutory requirements in force at the time:

6.0 DESIGN CRITERIA

LV power characteristics: 400/230 V, 3-phase, 50 Hz, 230 V, 1-phase, 50 Hz.

External Design Conditions		
Winter	-	-6°C sat
Sizing for AHU plant		-10 ^{o}C
Summer	-	26.2^{o}C db 18.5^{o}C wb
Sizing for refrigeration plant	-	30°C
Chilled Water Operating Pressure	-	2.5 Bar
Limiting Noise Criteria at Boundary		Refer to Acoustic Consultant's report

7.0 LIAISON

Project Co. shall include for liaison with:-

Health and Safety Professionals. As well as the Health and Safety requirements of this specification, Project Co. shall include for close liaison with Health and Safety professionals including the Hospital's Health and Safety Advisors and the CDM Co-ordinator and shall comply with the CDM Regulations and all Health and Safety Regulations.

Specialist Installers. Project Co. shall liaise with other Specialist Installers as necessary to ensure that all interfaces between the Fire Detection and Alarm System and other systems are allowed for. This shall include but not be limited to:-

- Building Management System specialist
- Fire Alarm and Detection specialist

Building Control. Project Co. shall liaise, with and adhere to, the requirements of the Building Control Officer.

Any other member of the Project and Hospital Board teams concerned with the planning and administration of the cooling system.

8.0 SYSTEM DESCRIPTION

Cooling Plant Arrangement

The total cooling load shall be met by 3 air cooled chillers at 800kW each. The total installed chilling capacity shall therefore be 2,400kW. Three air cooled chillers shall be located in the level four external chiller plant area.

Chilled water shall be used as the main cooling medium for the ventilation and air conditioning systems.

The total load to be supported by the chiller system shall therefore be some 2,400kW, which shall be met by chillers. Therefore, each cooling plant shall approach a capacity of 33% of the total building load, which shall be sufficient to allow the hospital to continue to function in the event of a catastrophic failure on one system.

Each chiller shall be provided with acoustic attenuation packages to meet not only the day/night boundary sound level limitation, but also the intrusive noise level limits into the hospital. The acoustic treatment shall be in accordance with the recommendations of the acoustic consultant.

All items of cooling plant and system control shall be capable of being fully interrogated by the building management system through the independent network protocol (open protocol). Water pumping and pressurisation equipment shall be located in level 4 plantroom. From the plantroom, the chilled water pipework systems shall run to serve air-handling equipment in the various plantroom areas, and terminal cooling equipment in selected spaces.

The chilled water system shall be 100% water with trace heating protection where the pipework is exposed on the roof. Primary chilled water circuits shall emanate from the chilled water plantroom.

The primary circuit shall operate at nominal design flow and return temperatures of 6ºC and 12ºC respectively scheduled to outside air temperature.

The Primary chilled water system shall include the following elements:

- Chilled water pressurisation plant with twin pump make-up pumps and expansion vessels to maintain the pressure in the primary chilled water system.
- Multiple circulation pumps.
- A dirt separator unit on the main flow pipework.
- An active deaeration unit on the main flow

The system shall be capable of being treated with corrosion inhibiting chemicals via a manual-dosing unit.

It is proposed to provide 2-port control valves with differential-pressure-control valves (DPCV's) on all of the major load centres to allow the use of variable volume control of the primary chilled water circuit. The circulating pumps shall be controlled by the BMS in sequence as needed to match the varying load demand. This shall maintain the pressure differential between flow and return pipework within set limits with sensors located within the main sub-distribution pipework. The system shall not permit any of the primary circuit pumps to operate at less than 40% of their design maximum. A motorised bypass valve shall be provided on each pump set to ensure that a minimum of 40% is achieved. The DPCVs shall protect the downstream control valves from excessive pressures and nullifying the effects of pressure variations caused by the movement of control valves in other branches. This shall also aid commissioning. Care should be taken not to over tighten the DPCVs during commissioning.

The chilled water system shall include the following elements:

i) Chilled water pressurisation plant with twin pump make-up plant expansion vessel to maintain the pressure in the secondary chilled water system.

ii) Run and stand-by secondary circulation pumps serving air handling plant cooling coils and fan coil units.

iii) An active deaeration and dirt separator unit on the main flow pipework.

iv) The system shall be capable of being treated with corrosion inhibiting chemicals via a manual-dosing unit.

It is proposed to provide 2-port control valves on all the air handling unit cooling coils. This shall allow the use of variable speed control on the secondary circulation pumps, achieved by inverter motor control units located within the plantroom area. These shall be controlled by the BMS to maintain the pressure differential between flow and return pipework within set limits with sensors located in the main sub-distribution pipework. The system shall not permit the secondary circulation pumps to operate at less than 40% of their design maximum.

All circuits shall have Differential-pressure-control valves (DPCVs) to protect the two port valves from excessive pressures and nullifying the effects of pressure variations caused by the movement of control valves in other branches.

The systems shall be divided into sections to allow individual areas to be isolated from the main system for maintenance or shutdown.

All main and subsequent department branches shall be provided with balancing/measurement, DPCV's and isolation valves along with drain cocks, air vents etc. to ensure proper control and regulation of water flow rates under design load condition with flushing, draining and re-filling facilities.

Local cooling, where required, shall be provided via ceiling mounted fan coil units.

Buffer Vessel

A buffer vessel shall be provided on the cooling water system to provide sufficient cooling capacity within the system to provide five minutes of full cooling output in the event of a power failure and before the standby generators are available to supply the main chilled water circulation pumps and chillers.

T50 CHILLED WATER SYSTEMS

110 CHILLED WATER SYSTEM

- System: Two pipe.
  - Pipeline circuits: Variable flow.
- Cooling source: Air cooled liquid chillers.
- Pressurization units: As section Y20.
- Pumps: Close coupled in line pumps, as section Y20.
- Pipelines: As section Y10.
- Pipelines ancillaries: As section Y11.
- Thermal insulation: As section Y30.
- Vibration insulation: Inertia bases in accordance with acoustic consultants recommendations.
- Emitters:
  - Air handling units, as section U81;
  - Cooling coils and fan coil units.
- Controls: As specification Y40.
- Accessories: As schedule and specification.
- Completion:
  - Cleaning and chemical treatment: Flushing and chemical treatment as section Y12.
  - Plant and equipment identification: As section Y32.
  - Commissioning: Commissioning of chilled water systems, as section Y50.

SYSTEM PERFORMANCE

Project Co. shall supply and install services and equipment to perform as per specification. Project Co. shall submit details of all mechanical equipment for comment and place orders in a timely fashion to ensure delivery as per programme.

Where a particular manufacture is specified, Project Co. shall include for a product of that quality and performance.

Where considered appropriate, provide for equivalent standard alternatives to be offered for consideration.

This must be done in a timely manner and the Board shall provide all details including but not limited to:

- Detailed description
- Cost comparison
- Technical comparison
- References to standards
- References to SHTM’s

265 VARIABLE FLOW PIPEWORK SYSTEMS

Where chilled water systems utilise variable volume control systems they shall have differential pressure control valves (DPCV) installed as indicated on the drawings, and supplied and installed by .

The purpose of the DPCV is to automatically compensate for the rise in differential pressure across the circuit that it services, as the circuit flow rate falls under the dictate of the 2-port control valve(s), and vice versa.

DPCVs used in conjunction with motorised control valves and TRVs shall be arranged to maintain a constant differential pressure across the circuit.

Project Co. shall, in conjunction with the BMS Specialist, liaise with the DPCV supplier to ensure the correct motorised control valve selections are made and the whole system is compatible in terms of operating pressure ranges, etc.

Similarly, Project Co. shall, in conjunction with the BMS Specialist also liaise with the pump supplier, to ensure that the pump speed control system is totally compatible between the 3 elements, i.e. DPCV, motorised/thermostatic valves and pump characteristic and control.

It shall be noted that the minimum pressure drop across combination of control valve, coil and interconnecting pipework system and accessories shall be 25kPa to suit operation of DPCV.

The maximum operating pressure of the control valve, coil and interconnecting pipework/accessories shall also be reviewed against the selection of the DPCV.

EXECUTION

Project Co. shall ensure all works carried out shall be done is a safe manner and comply with Health and Safety Regulations. This shall include clean and tidy working and working in confined spaces.

Due to the size of the water systems being installed all pressure testing and commissioning equipment shall be cleaned and chlorinated before each use.

This is to prevent the systems from being contaminated with pseudomonas.

COMPLETION

O& M documentation shall be issued at least three months before completion of any part of the contract.
The contents and format shall be agreed with the Board. The document shall be issued/uploaded on Acconex.

Project Co. shall provide instruction to the clients engineers and maintenance staff in the safe operation of all systems and items of equipment for an adequate and reasonable period of time based on the manufactures recommendations and best practice. Project Co. shall provide adequate and qualified staff in order to carry out their maintenance and repairs during the defects liability period.

Project Co. shall protect the system from damage or interference during the works. Project Co. shall test, flush and clean the system as per section Y12, Y50, SHTMs

Project Co. shall submit O&M's.

Project Co. shall provide training as per section Y12 & Y50.

Project Co. shall provide spares as per section Y12 & Y50.

905 HYDRAULIC PRESSURE TESTING OF CHILLED WATER SYSTEMS

- Testing: In accordance with HVCA TR/6.
- Notice (minimum): 1 week.
- Pressure: 1.5 times working pressure.
- Duration of test: 1 h.

920 OPERATING TOOLS

- Tools: Supply tools for operation, maintenance and cleaning purposes.
  Quantity: Supply tools for operation, maintenance and cleaning purposes. Supply keys for valves and vents.

T60 CENTRAL REFRIGERATION PLANT

320 SAFETY AND ENVIRONMENTAL REQUIREMENTS

- Standard: To BS EN 378-1, -2, -3 and -4.
- Leak detection: Gas detection and alarm system.

The Unit control system shall provide the unit with protection against the following:

- Loss of refrigerant charge.
- Reverse rotation.
- Low chilled water temperature.
- Low oil pressure (per compressor).
- Current imbalance.
- Compressor thermal overload
- Automatic compressor unloading in case of excessive air temperature
- High condensing pressure.
- Electrical overload.
- Loss of phase.

Fan motors shall be individually protected by a circuit breaker. Controls shall provide a separate general alert (minor incident) and alarm (circuit shut down) remote indication.

330 AIR COOLED LIQUID CHILLERS

Standards: To BS EN 14511-1, -2, -3 and -4.
Type: The chillers shall be of the fully packaged air-cooled type complete with multiple screw compressors.

Chillers shall have variable speed head pressure control with load and efficiency optimised head pressure and chilled water flow temperature control to improve seasonal efficiency.

Project Co. shall provide acoustic treatment to the chillers to meet the Limiting Noise Criteria in accordance with the recommendations of the acoustic consultant.

The chillers shall be fitted with a water flow switch to prevent damage to the chillers in the event of pump failure.

The chillers shall be factory assembled single piece air-cooled liquid chiller. Each unit shall comprise all factory wiring, piping, controls, refrigerant charge (HFC-134a), multiple refrigeration circuits, screw compressors, electronic expansion valves and equipment required prior to field start-up. Each unit shall be rated in accordance with EN14511 and certified by Eurovent (where applicable).The packaged air cooled chillers shall be of the high efficiency type provided an ESEER exceeding 3.9. The compressors shall utilise Chlorine free refrigerants with zero Ozone Depletion Potential values and offering refrigerant coefficient of performance values of 95% or better.

The chiller construction shall comply with European directives:

" Pressurised equipment directive (PED) 97/23/EC
" Machinery directive 98/37/EC, modified.
" Low voltage directive 73/23/EEC, modified
" Electromagnetic compatibility directive 89/336/EEC, modified, and the applicable
recommendations of European standards:
" Machine safety: electrical equipment in machines, general regulations, EN 60204-1
" Electromagnetic emission EN 50081-2.
" Electromagnetic immunity EN 50082-2.

Unit shall be designed, manufactured and tested in a facility with a quality assurance system certified to ISO 9001 and an environmental management system certified to ISO 14001.

Units shall be run tested and witnessed at the factory.

The frame shall be made of galvanized steel U beam and protected by two layers of protection (primer and final coating) with an average thickness of 200 microns. The control / electrical cabinets shall be steel with an oven-baked polyester-paint finish, and be capable of withstanding a 500-hour salt spray test in accordance with the ASTM B-117 standard (U.S.A.).

Condenser fans shall be direct-driven, shrouded-axial type, shall be statically and dynamically balanced, and made of recyclable material with inherent corrosion resistance.

Air shall be discharged vertically upward. Fans shall be protected by coated steel wire safety guards. Condenser-fan motors shall be 3-phase, IP55, with permanently lubricated bearings and Class F insulation Units shall have semi-hermetic twin-screw compressors with internal relief valve and check valve to avoid reverse rotation on shut down.

Each compressor shall be equipped with a discharge shut-off valve.

Capacity control shall be provided by a variable speed operation capable of reducing compressor capacity down to 15% of full load. Compressor shall start in unloaded condition.

Motor shall be cooled by suction gas and protected by internal winding temperature sensors. Compressor bearings shall be oil free magnetic type.

The oil separator, separated from the compressor, shall not require an oil pump and shall incorporate an internal muffler to reduce discharge gas pulsations.

Each compressor and oil separator shall be installed within an insulated acoustic enclosure. Enclosure access panels can be readily removed for service using ¼ turn fasteners.

Evaporator shall be tested and stamped in accordance with applicable European pressure code for a refrigerant-side operating pressure of 2100 kPa and for a maximum water-side pressure of 1000 kPa (standard).

The evaporator shall be mechanically cleanable, shell-and-tube type with removable heads. Tubes shall be internally and externally enhanced, seamless-copper, and shall be rolled into tube sheets. Shell shall be insulated with 19 mm closed-cell foam with a maximum K factor of 0.28. Evaporator thermal insulation shall be factory fitted with aluminium cladding to provide mechanical protection and ensure protection against UV rays.

The evaporator shall have a drain and vent in each head.

The evaporator shall incorporate an active refrigerant level control system to ensure optimum heat transfer performance under all load conditions.

Chiller shall have only one water inlet & one water outlet connection using victaulic couplings to provide vibration isolation and to accommodate minor pipe-work misalignment.

Evaporator shall be fitted with an electronic water flow switch. Paddle switches or differential pressure switches shall not be acceptable.

The condenser shall be made of multiple coils in V configuration to provide protection against hail damage. Coil shall have integral sub cooler, and shall be constructed from a single material throughout to eliminate the risk of galvanic corrosion. Condenser coils shall be capable of being cleaned with a medium-pressure jet washer (up to 69 bar).

Condenser coils shall be leak tested with helium and shall be pressure tested at 3400 kPa. Condenser shall be 3 years factory guaranteed against leaks and corrosion (according to warranty policy).

Refrigerant circuit components shall include; compressor, oil separator, high and low side pressure relief devices, liquid line shutoff valves, refrigerant economizer, filter driers, moisture indicating sight glasses, long stroke electronic expansion device, and complete operating charge of refrigerant HFC-134a. To facilitate service and maintenance and avoid refrigerant charge transfers, it shall be possible to isolate the following components and systems independently: filter driers, oil filters, expansion devices and compressor (with compressor suction service valve option fitted). Pressure and temperature sensors may be replaced without the need to pump-out the refrigerant charge Unit controls shall include as a minimum: microprocessor with non-volatile memory, picture guided unit/operator interface, LOCAL/OFF/REMOTE/CCN selector and a touch-screen display with multiple language capability.

Pressure sensors shall be installed to measure suction, discharge, and oil pressures. Thermostats shall be installed to measure cooler entering and leaving temperatures and outside air temperature.

- Unit shall be capable of performing the following functions:
- Automatic change-over and cycling of compressors to equalize running hours and number of starts.
- EXV control to optimise evaporator refrigerant level, control discharge superheat and condenser sub-cooling.

- Capacity control based on leaving chilled fluid temperature with return fluid temperature sensing.
- Limit the chilled fluid temperature pull-down rate at start-up to an adjustable range of 0.1°C to 1.1°C per minute to prevent excessive demand spikes at start-up.
- Enable reset of leaving chilled water temperature according to the return water temperature
- Provide a variable set point for the leaving chilled water temperature activated by a remote contact closure signal or by the built in time clock.
- Enable a 2-level demand limit control (between 0 and 100%) or a maximum current drawn limit activated by a remote contact closure or by the built in time clock.
- Control evaporator water pump and, if installed, stand-by pump operation.
- Allow two time scheduling programs to enable unit start-up control, demand limit and setpoint changes.
- Enable lead lag control of two *or more* chillers running in series or parallel.

Display module shall be capable of displaying set points, system status including temperatures and pressures, current for each compressor, run time and percent loading.

The control system shall allow a quick test of all machine elements to verify the correct operation of every switch, circuit breaker, contactor and sensor before the chiller is started.

Unit shall be capable of starting and running at full or part load at outdoor ambient temperatures from –10°C to 55°C.

Unit shall be capable of starting up with 45°C entering fluid temperature to the evaporator. Leaving chilled water set point may be between 3.3°C and 15°C.

Unit shall operate on 400 volt (+ 10%), 3-phase power supply without neutral. A factory-installed transformer shall provide control power.

Unit shall be supplied with factory-installed fused isolator(s). Compressors shall be fitted with inverter drives as standard to limit electrical inrush current.

- Output: As chiller schedule.
- Refrigerant: R134a.
- Evaporator fouling factor: As chiller schedule.
- Energy efficiency ratio (EER): as schedule
- Sound pressure level: As chiller schedule.
- Electrical supply type: As chiller schedule.
- Number of refrigerant circuits: As chiller schedule.
- Evaporators: As chiller schedule.
- Condenser coils: Internally enhanced, seamless copper tubes mechanically expanded into aluminium alloy fins with full height collars. Integral sub cooler circuit.
- Condenser fan discharge: Vertical.
- Warning indication: As schedule.
- Accessories: Anti-vibration mountings.

EXECUTION

Project Co. shall protect chillers from damage or interference during the works. shall include for the services of the manufacturer's skilled services engineers to start up, test and check all the chillers and dry air coolers and controls.

This shall include all tests to prove that all the cooling equipment is working with and responding to the clients BMS network and head end. The units when commissioned shall be "Set Up" to give maximum efficiency. The Energy Centre cooling equipment shall be witnessed by the Board's representative before the cooling plant is accepted from the Board. Project Co. shall allow for instruction of the clients representative on the working of the equipment.

610 INSTALLATION GENERALLY

- Fixing of equipment and components: Fix on purpose made bases or supports.
- Pressure testing of joints: Immediately before installation of lagging and casing.

  - Results: Submit.

620 INSTALLING CHILLERS

- Location: Provide adequate space around chillers: Access around all cooling plant shall be as manufactures instructions.
- Access: Provide for inspection and servicing of chiller and ancillary equipment.

640 INSTALLING REFRIGERANT PIPEWORK

- Standards: To BS EN 378-3 and -4.
- Refrigerant lines: Short and straight.

Specification Check / Revision Sheet

Project	**RHSC and DCN Edinburgh Hospitals**	Project Number	**G1547**
Service (s)	**Mechanical**	Sheet	**WW AP.1.2.17 SMcK G1547**
Performance Specification Title	**Energy Centre Oil Fuel Supply**	Date	**August 2014**
Prepared By	**MM**	Checked By	**SMcK**

Revision Ref.	Date of Revision	Page N$^{o(s).}$	Revision Details	Checked By
FT	December 2013	All	Final Tender	SMcK
FC	July 2014	All	Update for Financial Close	SMcK
FC	August 2014	All	Comments Incorporated	SMcK

RHSC and DCN EDINBURGH
FUEL OIL SUPPLY SYSTEMS

CONTENTS

1.0 GENERAL INTRODUCTION

2.0 SCOPE

3.0 SPECIFIC EXCLUSIONS

4.0 INTERFACES AND DEMARCATIONS

5.0 APPLICABLE STANDARDS

6.0 DESIGN CRITERIA

7.0 LIAISON

8.0 SYSTEM DESCRIPTION

MATERIALS AND WORKMANSHIP CLAUSES

S41 FUEL OIL SUPPLY SYSTEMS

1.0 GENERAL INTRODUCTION

Purpose of Document

The development of the manufacture, supply, installation, setting to work and commissioning of the works described in this document shall be undertaken by the Mechanical and Electrical Specialist and is referred to in this document as “the Specialist”.

To carry out the development of the installation drawings and details, Project Co. shall obtain the necessary supporting documentation.

This Specification shall be read in conjunction with all other mechanical and electrical engineering services specifications and the Architectural drawings.

Description of Project

The new facility shall re-provide services from the Royal Hospital for Sick Children, Child and Adolescent Mental Health Service and the Department of Clinical Neurosciences in a single building adjoining the Royal Infirmary of Edinburgh at Little France.

The DCN part of the Facilities will have a physical link with the existing RIE Facilities specifically with the critical care unit.

The building is generally constructed from reinforced concrete.

The basement houses FM support facilities and the main building services heat distribution centres and electrical plant rooms.

Ventilation plantrooms are generally located at roof level and level 2.

A central Energy Centre shall be provided to the South of the hospital housing heating, CHP, standby generation, fuel storage and utility incomers.

2.0 SCOPE

The scope of work covered by this Specification shall include, but not be limited to the following:-

- Oil tanks
- Oil pipework
- Associated oil equipment (such as pumps, pipeline accessories, and oil fill point)

3.0 SPECIFIC EXCLUSIONS

The following is specifically excluded from the scope of this performance specification:-

- Power supplies to plant
- Fire and BMS interface connections
- All controls wiring

4.0 INTERFACES AND DEMARCATIONS

The fuel oil system shall be provided as a complete working system serving the Energy Centre.

Project Co. shall provide information to other parties for power supplies and fire alarm system and BMS interfaces.

5.0 APPLICABLE STANDARDS

All elements of the works shall be in accordance with the requirements of current legislation, regulations and industry standards unless otherwise stated. This includes those related to Scotland in particular.

The fuel oil supply shall accord with all appropriate Scottish Health Technical Memoranda, Codes of Practice and relevant British and European Standards.

The equipment supplied shall conform to all relevant standards and regulations in force. The equipment shall be supplied with relevant Declarations of Conformity to certify compliance with the EMC directive 89/336/EEC-92/31/EEC and the Machinery Safety Directive 89/392/EEC-91/368/EEC-93/44/EEC. Also the equipment and installation shall comply with all relevant statutory requirements in force at the time.

Project Co's. shall comply with the Water Environmental (Oil Storage) (Scotland) Regulations 2006, to which the fuel oil system must adhere.

6.0 DESIGN CRITERIA

Electricity Supply Characteristics

LV power characteristics: 400/230 V, 3-phase, 50 Hz, 230 V, 1-phase, 50 Hz.

7.0 LIAISON

Project Co. shall include for liaison with:-

Health and Safety Professionals. As well as the Health and Safety requirements of this Specification, Project Co. shall include for close liaison with Health and Safety professionals including the Hospital's Health and Safety Advisors and the CDM Co-ordinator and shall comply with the CDM Regulations and all Health and Safety Regulations.

Other Specialist. Project Co. shall liaise with other specialists as necessary to ensure that all interfaces are allowed for. This shall include but not be limited to:-

- Building Management System specialist
- Fire Alarm and Detection specialist

Building Control. Project Co. shall liaise, with and adhere to, the requirements of the Building Control Officer.

Any other member of the Project and Trust teams concerned with the planning and administration of the fuel oil system.

8.0 SYSTEM DESCRIPTION

The fuel oil is to provide supplies for the new generators and boilers in the new Energy Centre. The oil is to be as required by BS 2869, Class D with a maximum sulphur content of 1000 ppm (0.1%).

Two tanks shall be located externally at ground level adjacent to the Energy Centre sized at 185m³ each and are to serve the Energy Centre boilers and Generators.

Each tank of the tanks is to have its own individual oil fill connection complete with oil fill indicator.

Two pump and filter sets are to be provided to serve respectively:-

- Boilers - Energy Centre
- Generators - Energy Centre

Class D 35 sec oil has been selected as the fuel for the standby diesel generators and emergency (dual fuel/standby) for the main boiler plants. The storage tank volumes are based on the generators and boilers operating at full load and for a period of 200 hours for the generators and 120 hours for the boilers.

Each generator shall have an individual 8 hour gravity feed day tank complete with filling line and level alarms that shall be linked to the BMS. The boilers shall be duel fuel with the fuel oil used as a back-up for the natural gas installation. The main tanks located externally on the ground floor shall be in a common bund capable of retaining a minimum of 25% of the total fuel oil brimful storage capacity.

The bund will incorporate a rainwater sump and a base with angle fillets at any junction with a vertical face to deflect ice. The sump must not connect directly with any drain or sewer.

All electrical equipment, motors, switches, lighting, etc. installed within the oil storage tank areas shall be explosion proof.

Oil check meters shall be installed, as indicated on the drawings. Each meter shall incorporate a 'Y' type strainer to suit the oil meter size and have a mesh not less than 100 micron. Oil meters shall be suitable to provide a pulsed output to the BMS system

Each tank shall be complete with all necessary fill and outlet components, level indicators etc. and access ways.

Leak detection shall be provided below each tank, main tank and day tank linked to the BMS.

A sump unit complete with a float switch shall be provided in the oil pump room to form part of the safety circuit to shut the fire valves on the daily service tanks and stop the generator oil transfer pump should the sump unit become flooded due to leakage from the flow and return pipes to each generator.

is to provide and fit on the wall adjacent to the oil sump in the main oil storage tank area a semi-rotary hand pump suitable for handling oil fuel which has leaked and drained into the sump.

A foot valve shall be fitted to the end of the suction pipe in the sump and the discharge pipe shall be routed through the external wall to terminate at a suitable height to empty into a collection vessel.

Overflows shall be as follows:-

- From the generator day tanks to the ground floor sumps

The vents shall be as follows:-

- From the generator day tanks to their own integral bund
- From the external bulk oil tanks to within the bund

S41 FUEL OIL SUPPLY SYSTEMS

110 FUEL OIL SUPPLY SYSTEM

Storage capacity
- Diesel Generators 200 hours and
- LTHW Boilers 120 hours

- Type: Fuel oil transfer from the bulk oil storage tanks to serve the oil main system for the Boilers and generators shall be provided by a duplex (duty and standby) packaged pump set situated in the Energy Centre.

Each packaged duplex pump set shall incorporate the following:-

- Manifold pressure relief valve, control panel, pressure gauges and isolating cocks connected to the suction and discharge side of the pumps
- Suction strainers/filters
- All assembled on a drain pan bed plate
- Each pump fitted with an integral relief valve
- Differential pressure switch piped across the common suction and discharge
- Automatic changeover in fault condition and duty sharing.

The oil transfer pumps shall be capable of manual or automatic operation. The pumps shall be interlocked to the level sensors in the main and daily storage tanks. The oil transfer pumps serving the generators and boilers shall automatically transfer oil when the engines/burners run and level switches dictate.

- Storage tanks: Carbon steel.
  - Tank accessories: Contents gauges and Overfill alarms and overfill prevention devices
- Oil heating methods: Not required.
- Pipelines: As section Y10.
  - Pipeline accessories:
    Electronic shut off fire valves shall be provided on inlets to each daily service tank and bulk tank which shall operate in the event of a fire alarm situation, or on a signal from the gas alarm system. The day tanks shall be provided with an extra low level sensor which shut the generators down.
  - Filters;
  - Remote acting fire safety valves
  - Strainers.
- Oil pump: Burner pump and duel Transfer pump, as section Y20.
- Outlet: Dual fuel fired cast iron boiler, as section T20 and generators.
- Controls: A central control panel shall be provided by the BMS Specialist which shall be interfaced with the fire alarm system and provide a common alarm to the BMS via volt free contacts. For details of controls and interlocks with plant, see BMS Specification. All controls shall be capable of being fully interrogated by the building management system through the independent network protocol.
- Completion:
  - Plant and equipment identification: As section Y32.

PRODUCTS

Project Co. shall ensure that all equipment is ordered to arrive in a timely fashion and to meet the programme, with particular reference to the main fuel oil tanks.

330 OIL STORAGE TANKS, CARBON STEEL

Tanks shall be single skinned tanks of equal capacity. Each tank shall be complete with all necessary fill and outlet components, level indicators etc and access ways as required by British Standards and SHTM

The external bulk tanks are to be in a bunded sump. Tanks to be single piece connected with a header arrangement.

The tanks shall be manufactured in accordance with BS 799: Part 5.

- Single skinned
- Oil fill pipe and connection
- Vent pipe and connection with vent pipe pressure relief valve and vent guard
- Drain connections with drain valves
- Supply outlet connection
- Spare plugged connection
- 600 mm dia. raised manhole access with cover
- Suitable number of connections for contents gauge sensors
- Suitable number of connections for level control/alarm sensors
- Earthing points
- Caged access ladder with platform and handrail
- Tank details notice showing BS, Type, capacity, date of manufacture, manufacturer and fuel type.
- Inspection openings.

The contents/oil level of the bulk tank shall be monitored by the BMS via the contents gauge sensor.

- Standards:
  - Tank: To BS 799-5 and OFS T200.
- Type: Single skinned
- Manufacturer: Submit proposals
  - Product reference: Submit proposals
- Number of manholes or inspection covers: To suit statutory requirements
- Fittings: As required by the drawings and specification
- Accessories: As required by the drawings and specification

350 CONTENTS GAUGES

Each Tank shall have a contents gauge showing the actual contents not just full/empty.

- Standards: To BS 799-5 and OFS E103.
- Type: Submit proposals.

- Manufacturer: Project Co. choice.
  - Product reference: Project Co. choice.

360 OVERFILL ALARMS AND OVERFILL PREVENTION DEVICES

A labelled oil fill cabinet shall be provided for each of the main bulk storage tanks.

The cabinet shall have a top hinged front door complete with a glass observation panel, a supporting strut for use in the open position, and a car type level lock with 2 No. keys. The
whole unit is to be weatherproof and finished internally and externally with a durable paint. The cabinet is to house a gun-metal cap with a retention chain padlock and 2 No. keys and plainly labelled with the tank identification number and grade of oil.

The cabinets shall also include the contents gauge and overfill alarm for the tank and a
Light fitting and switch. The fill cabinets shall contain a 100 mm contents gauge of the hydrostatic continuously reading type, calibrated in litres to suit the tank, and marked 'empty' at the lower limit of usable oil.

The tank transmitter(s) are to be readily replaceable without the need to drain the tank and the connecting tubing is to be armoured and fully supported and clipped on galvanised cable tray throughout its length.

The fill cabinet shall contain a tank overfill alarm(s) connected to the tank to give an
Audible warning when the tank has been filled to 95% of its total volume with a muting and test switch.

The float detector units associated with these tanks are to be completely weatherproof and are to be fixed in suitable connections at the top of the tank, close to the manholes and access platforms.

The overfill alarm shall have a connection for an alarm to the BMS.

The cabinets shall be complete with drip tray capable of containing 110% of the fill pipe volume to contain any spillage.

- Standard: To OFS E105.
- Manufacturer: Project Co. choice
  - Product reference: Project Co. choice

430 FILTERS

Duplex oil filters – 1st and 2nd stage - shall be provided in the suction lines to each oil transfer pump set as shown on the drawings, also upstream of the oil meters.

- Standard: To OFS E104.
- Manufacturer: Project Co. to submit proposals.
- Product reference: Project Co. to submit proposals.

440 REMOTE ACTING FIRE SAFETY VALVES

A solenoid shut off valve shall be installed in the main diesel oil supplies to the boilers and diesel daily service tanks. The valve shall be interlocked with the emergency knock off button.

- Standards: To BS 799-5 and OFS E101.
- Type: Electrical with battery back up to maintain valve open in the event of loss of power Manufacturer: Project Co. to submit proposals.
  - Product reference: Project Co. to submit proposals.

450 STRAINERS

Strainers shall be provided with meters

- Standard: To OFS E104.
- Manufacturer: Project Co. to submit proposals.
  - Product reference: Project Co. to submit proposals.

EXECUTION

Project Co. shall ensure all works carried out shall be done is a safe manner and comply with Health and Safety Regulations. This shall include clean and tidy working and working in confined spaces.

620 TANK INSTALLATION

- Standards: To BS 799-5 and in accordance with BS 5410-2.
- Steel tanks: Support on masonry piers built on concrete foundations. Run piers across the shortest base dimension of the tank.
  - Pier width: Slightly wider than the tank.
  - Fall: Arrange tank to slope slightly to drain off cock end.

630 OIL SUPPLY PIPELINES INSTALLATION

- Installation: In accordance with BS 5410-2 and OFTEC Technical Book 3.
- Buried pipelines: To OFTEC Technical Book 3.

COMPLETION

Project Co. shall protect the system from damage or interference during the works. Project Co. shall commission the fuel oil system as per section Y50 and 910 this shall include proving the pumps for auto change over and level indicators and alarms on all of the fuel oil system/fill system.

Project Co. shall submit O&M's. Project Co. shall provide training as per section Y50. Project Co. shall provide spares as per section Y50. 's defects and liability period shall be as the contract prelims.

910 COMMISSIONING

- Commissioning: In accordance with OFTEC Technical Book 2 and 5.

920 DOCUMENTATION

- Operation and maintenance instructions: Submit.
- Record drawings: Submit.

Specification Check / Revision Sheet

Project	**RHSC and DCN Edinburgh Hospitals**	Project Number	**G1547**
Service (s)	**Mechanical**	Sheet	**WW AP.1.2.9 SMcK G1547**
Performance Specification Title	**Fire Hydrant System**	Date	**August 2014**
Prepared By	**DW**	Checked By	**SMcK**

Revision Ref.	Date of Revision	Page N$^{o(s).}$	Revision Details	Checked By
FT	December 2013	All	Final Tender	SMcK
FC	July 2014	All	Update for Financial Close	SMcK
FC	August 2014	All	Comments Incorporated	SMcK

RHSC and DCN EDINBURGH
FIRE HYDRANT SYSTEMS

CONTENTS

1.0 GENERAL INTRODUCTION

2.0 SCOPE

3.0 SPECIFIC EXCLUSIONS

4.0 INTERFACES AND DEMARCATIONS

5.0 APPLICABLE STANDARDS

6.0 DESIGN CRITERIA

7.0 LIAISON

8.0 SYSTEM DESCRIPTION

MATERIALS AND WORKMANSHIP CLAUSES

S65 FIRE HYDRANT SYSTEMS

1.0 GENERAL INTRODUCTION

Purpose of Document

The development of the design, manufacture, supply, installation, setting to work and commissioning of the works described in this document shall be undertaken by the Project Co..

To carry out the development of the design, Project Co. shall obtain the necessary supporting documentation.

This specification relates to the fire hydrants.

This specification shall be read in conjunction with all other mechanical and electrical engineering services specifications and the Architectural drawings.

Description of Project

The new facility shall re-provide services from the Royal Hospital for Sick Children, Child and Adolescent Mental Health Service and the Department of Clinical Neurosciences in a single building adjoining the Royal Infirmary of Edinburgh at Little France.

The DCN part of the Facilities will have a physical link with the existing RIE Facilities specifically with the critical care unit.

The building is generally constructed from reinforced concrete.

The basement houses FM support facilities and the main building services heat distribution centres and electrical plant rooms.

Ventilation plantrooms are generally located at roof level and level 2.

A central Energy Centre shall be provided to the South of the hospital housing heating, CHP, standby generation, fuel storage and utility incomers.

2.0 SCOPE

The scope of work covered by this Specification shall include, but not be limited to the following:-

- External Fire Hydrant System

3.0 SPECIFIC EXCLUSIONS

The following is specifically excluded from the scope of this Performance Specification:-

- Incoming water mains to site
- External potable water supply pipes

4.0 INTERFACES AND DEMARCATIONS

The fire hydrant shall be provided as a complete working system serving the RHSC-DCN Building.

5.0 APPLICABLE STANDARDS

All elements of the works shall be in accordance with the requirements of current legislation, regulations and industry standards unless otherwise stated.

The Fire Protection Systems shall accord with all appropriate Hospital Technical Memoranda, Codes of Practice and relevant British and European Standards.

The equipment supplied shall conform with all relevant standards and regulations in force. The equipment shall be supplied with relevant Declarations of Conformity to certify compliance with the EMC directive 89/336/EEC-92/31/EEC and the Machinery Safety Directive 89/392/EEC-91/368/EEC-93/44/EEC. Also the equipment and installation shall comply with all relevant statutory requirements in force at the time:

The hydrant mains supply and fire hydrants shall comply with the requirements of BS 9990:2006; BS 9999:2008; Water for Scotland 2nd Edition 2007; Scottish Building Standards: Technical Handbook: Non-domestic Section 2.12, 2.13, and 2.14; and the requirements of the local Fire Authority and Water Authority respectively.

- The fire hydrant main services systems shall comply with the relevant clauses of SHTM 2023, 2027, 2040, SHTM 04-01, BS 9990, Scottish Water Byelaws 2004, and descriptions and requirements set out below.

6.0 DESIGN CRITERIA

To meet the requirements detailed in Water for Scotland 2nd Edition Section 2.3.9 and building control requirements.

7.0 LIAISON

The Specialist Project Co. shall include for liaison with:-

Health and Safety Professionals. As well as the Health and Safety requirements of this specification, the Project Co. shall include for close liaison with Health and Safety professionals including the Hospital's Health and Safety Advisors and the CDM Co-ordinator and shall comply with the CDM Regulations and all Health and Safety regulations.

Other Specialist. The shall liase with other Specialists as necessary to ensure that all are allowed for.

Building Control. The Project Co. shall liase, with and adhere to, the requirements of the Building Control Officer, Fire Officer, Fire Engineering Consultant and any other member of the Project and Trust teams concerned with the planning and administration of the Fire Hydrant System.

8.0 SYSTEM DESCRIPTION

Incoming Fire Main Supply:

A separate fire main will run from the site boundary to serve fire hydrants and sprinkler tanks.

The fire mains will be unmetered.

The fire mains shall run around the main hospital building with 6No. 80mm DI minimum sub branches to serve the underground fire hydrants, and a 150mm DI branch to serve the sprinkler tanks.

The fire hydrants shall be in purpose made chambers below the ground in accordance with the requirements of Water for Scotland 2Nd Edition and the local Fire Authority and be fitted with a sluice valve.

The hydrant cover shall be as required by Strathclyde Fire & Rescue and badged fire hydrant.

A separate 150mm fire main branch from the site hydrant main shall enter the Acute/Children's Hospital at basement level and run within the basement corridor and water tank room to serve the Sprinkler tanks. This supply shall be unmetered.

Fire Cladding

The incoming fire main shall be fire clad where is passes through any non sprinklered areas on its route to the fire tank room.

S65 FIRE HYDRANT SYSTEMS

General

Fire hydrants shall be located as close as practicable to the main, preferably directly above the main, to reduce dead leg lengths to an absolute minimum.

The fire hydrant shall conform to BS 750: 2006 Specification for underground fire hydrants and surface box frames and covers and BS EN 14339: 2005 Underground fire hydrants

Hydrant main pipework shall be light weight ductile iron to BS EN 545 installed in accordance with the pipe manufacturers requirements.

Pipe in trenches shall be laid on a minimum of 100mm bed of <20mm gravel or coarse sand and trenches shall ensure 900mm cover, measured from the crown of the pipe.

Pressure testing shall be undertaken in accordance with the requirements of the pipe manufacturer, the local Fire Authority and Water Authority.

Backfilling shall be undertaken in such a manner so as to avoid any deformation of the pipe. Heavy compaction equipment shall not be used with less than 300mm of cover. A marker tape shall be laid 300mm above the crown of the pipe.

110 FIRE HYDRANT SYSTEM

This underground fire hydrants shall:

a) be installed in a water distribution system;
b) be size DN 80;
c) be suitable for a maximum allowable operating pressure (PFA) of 1.6 MPa or 2.5 MPa (16 bar or 25 bar);
d) be fitted with screw-down type valves; and with one outlet.

Comply with BS 750.
WRC approved materials of construction.
Standard outlet - 2½" male hydrant round thread (other options available).
Universal inlet flange (3" BS10 Table E or 80mm BS 4504 NP16)
Blank cap, chain and frost valve provided.

- Water source: Dedicated water storage and pumping facility.
- Distribution: High density (HPPE) polyethylene 100 to SDR 11 pipelines.
- Outlets: Underground fire hydrants.
- Accessories:
  - Indicator plates;
  - Surface boxes; and
  - Warning marker tape.
- Completion: The Board shall Test, flush and clean the system as per regulations, SHTM/HTM's, this specification and Fire officer requirements.

System Performance

All fire hydrant pipework exposed to the frost will be insulated or trace heated to prevent
freezing.

210 DESIGN

- Standards: To BS EN 806-2 and in accordance with BS 9990.
- Design: Complete the design of the fire hydrant system.
- Proposals: Submit drawings, technical information, calculations and manufacturers' literature.
- Mains water supply to hydrants: Provide an independent water supply.
  - Evidence of capacity of mains water supply: Submit.

320 DUCTILE IRON PIPELINES

- Standard to BS EN 545
- Manufacturer: Saint Gobain
  - Product reference: Pam Natural Blutop
- Jointing: Anchor gasket

340 UNDERGROUND FIRE HYDRANTS

- Standards: To BS EN 1074-6 and BS 750.
- Hydrant type to BS EN 1074-6: Underground.
- Valve type to BS 750: Screw-down (type 2)
  Valve shall be
  Fully maintainable.
  " Ductile iron construction.
  " 2½_ London round thread gunmetal outlet to BS 750.
  " Exceeds flow requirements:
  -Kv = 92 minimum, 2000l/min,
  -Kv = 101 maximum, 2200l/min.
  " Corrosion resistant construction, compliant with BS EN 1074-6 for disinfection products.
  " Universal drilled inlet flange BS EN 1092-2:1997, BS 10 Table D/E.
  " Inlet is of a proprietary type.
  " Auto-frost drain valve as standard.
  " Draining stopper.
  " Kite marked.
  " Low weight design.
  " WRAS approved. .
- Manufacturer: Submit proposals.
  - Product reference: Submit proposals.
- Duckfoot bend: Not required.
- Outlet material: Submit proposals.
- Plug: Submit proposals.
- Accessories: Spindle cap, outlet cap and frost valve.

350 INDICATOR PLATES Shall be installed adjacent Hydrant

- Standard: To BS 3251.
  - Class: A.
- Manufacturer: Submit proposals.
  - Product reference: Submit proposals .

- Material: Cast iron.
- Finish: Vitreous enamel.
- Colours:
  - Characters: Black.
  - Front surface: Reference number 309 (Canary yellow) to BS 381C.
- Accessories: As specification and schedule.

360 SURFACE BOXES Shall be suitable for application e.g. footpaths, heavy traffic.

- Standard: To BS 750.
  - Grade: Submit proposals.
- Manufacturer: Submit proposals.
  - Product reference: Submit proposals.
- Material: Grey cast iron (CI).
- Finish: As structural Engineers specification.
- Marking: 'FIRE HYDRANT' in 30 mm high letters.
- Accessories: Lifting keys and Marker posts.

370 WARNING MARKER TAPES

- Manufacturer: Board's choice.
  - Product reference: Submit proposals.
- Type: Continuous colour coded, heavy gauge polyethylene identification tapes.
- Wire detection aid: Required.

Execution

The Board shall Test, flush and clean the system as per regulations, SHTM/HTM's, this specification and Fire officer requirements

610 ISOLATION

- Connection to existing fire hydrant systems: Provide an isolation valve and non-return valve.

630 INSTALLATION GENERALLY

- Fire hydrant position: Unobstructed by the parking, loading and unloading of vehicles.
- Protection: Protect from damage, e.g. by frost, traffic loads or vibration.

640 INSTALLING PIPELINES

- Depth of cover: As NJUG.
- Set out: Lay in straight lines.
- Concealment: As drawings.
- Trench excavations: Carefully prepare to a firm even base. Remove sharp objects and replace with pea gravel to give 100 mm (minimum) cover above and below the pipe.
- Installation: Thoroughly clean lengths of pipe internally before laying. Temporarily cap until jointing takes place. After laying and jointing keep leading end capped.
- Thrust blocks: Install at changes of direction and blank ends.

- Backfilling: Excavated material free from large stones and sharp objects. Leave joints exposed until after pipeline pressure test. Lay and compact in 300 mm maximum layers.
- Do not use heavy compactors before backfill is 600 mm deep.

650 INSTALLING UNDERGROUND FIRE HYDRANTS

- Installation: In accordance with BS 9990.
- Depth (maximum): 300 mm from hydrant outlet to finished ground level.
- Details of pit construction: Submit proposals.

660 INSTALLING SURFACE BOXES

- Clear openings: To BS 750.
- Frame depth:
  - Grade A: 100 mm.
  - Grade B: 75 mm.
- Frame width: 75 mm.
- Fit of frames and covers: Set top of cover flush with top of frame.

670 INSTALLING INDICATOR PLATES

- Aluminium plates: Aluminium alloy, zinc coated steel or copper alloy screws.
- Plastics plates: Zinc coated steel screws or adhesive.
- Ferrous plates: Zinc coated steel screws or bolts.

680 INSTALLING WARNING MARKER TAPES

- Installation: During backfilling, lay along the route of the hydrant main.
- Location, depth, colour and markings: To requirements of service undertaker.

Completion

910 FLUSHING

- Operation: Fill system with water and discharge it via the hydrant. Flush out debris.

920 TESTING

- Standard: To BS 6700.
  - Notice before commencing testing (minimum): 1 week.
- Static pressure test: Charge the system with water twice the maximum pressure to which the installation is designed to be subjected in operation. Maintain for 1 h. During this period check that no water leaks from joints or valves.
  - Results: Submit.
- Flow test: Pass water through the system under pressure and record flow and pressure readings.
  - Timing: After static pressure test.
  - Results: Submit.

930 SYSTEM DISINFECTION

- Standard: To BS 6700.
- Certification: Submit disinfection certificate.

940 SETTING TO WORK

- Operation: Check operation of hydrant valves.
- Make ready: Check operation of frost valve and leave ready for use.

950 DOCUMENTATION

O& M documentation shall be issued at least three months before completion of any part of the contract.
The contents and format shall be agreed with the Board. The document shall be issued/uploaded on Acconex.

The Specialist shall provide instruction to the clients Engineers and maintenance staff in the safe operation of all systems and items of equipment for an adequate and reasonable period of time based on the Manufactures recommendations and best practice.
The Specialist shall provide adequate and qualified staff in order to carry out their maintenance and repairs during the defects liability period.

- Manufacturers' operating and maintenance instructions: Submit.
- Test records: Submit a record of inspections and tests.
- Record drawings: Submit drawings showing location of pipe runs, hydrants and valves.

960 OPERATING TOOLS

- Tools: Supply for operation, maintenance and cleaning purposes.
- Keys: Supply for hydrants.
  - Quantity: as per contract requirements.

Specification Check / Revision Sheet

Project	**RHSC and DCN Edinburgh Hospitals**	Project Number	**G1547**
Service (s)	**Mechanical**	Sheet	**WW AP.1.2.16 SMcK G1547**
Performance Specification Title	**Water Treatment Equipment**	Date	**August 2014**
Prepared By	**DW**	Checked By	**SMcK**

Revision Ref.	Date of Revision	Page N$^{o(s).}$	Revision Details	Checked By
FT	December 2013	All	Final Tender	SMcK
FC	July 2014	All	Update for Financial Close	SMcK
FC	August 2014	All	Comments Incorporated	SMcK

RHSC and DCN EDINBURGH
WATER TREATMENT EQUIPMENT

CONTENTS

1.0 GENERAL INTRODUCTION

2.0 SCOPE

3.0 SPECIFIC EXCLUSIONS

4.0 INTERFACES AND DEMARCATIONS

5.0 APPLICABLE STANDARDS

6.0 DESIGN CRITERIA

7.0 LIAISON

8.0 SYSTEM DESCRIPTION

MATERIALS AND WORKMANSHIP CLAUSES

S12 Water Treatment Equipment

1.0 GENERAL INTRODUCTION

Purpose of Document

The development of the design, manufacture, supply, installation, wiring, setting to work and commissioning of the works described in this document shall be undertaken by the Mechanical and Electrical Installer and is referred to in this document as

To carry out the development of the design, the Specialist shall obtain the necessary supporting documentation.

This specification relates to the Water Treatment Equipment serving the RHSC-DCN Buildings.

This specification shall be read in conjunction with all other mechanical and electrical engineering services specifications and the Architectural drawings.

Description of Project

The new facility shall re-provide services from the Royal Hospital for Sick Children, Child and Adolescent Mental Health Service and the Department of Clinical Neurosciences in a single building adjoining the Royal Infirmary of Edinburgh at Little France.

The DCN part of the Facilities will have a physical link with the existing RIE Facilities specifically with the critical care unit.

The building is generally constructed from reinforced concrete.

The basement houses FM support facilities and the main building services heat distribution centres and electrical plant rooms.

Ventilation plantrooms are generally located at roof level and level 2.

A central Energy Centre shall be provided to the South of the hospital housing heating, CHP, standby generation, fuel storage and utility incomers.

2.0 SCOPE

The scope of work covered by this Specification shall include, but not be limited to the following:

- The Water Filtration Plant for the raw incoming mains water supply
- The Endoscopy washer plant

3.0 SPECIFIC EXCLUSIONS

The following is specifically excluded from the scope of this Specification.

- The domestic cold water service
- The domestic hot water service
- Site Water Mains

4.0 INTERFACES AND DEMARCATIONS

The Water Filtration plant shall be provided as complete working systems serving the RHSC-DCN Building. The Project Co. shall provide information to other parties including for power supplies and BMS interfaces.

5.0 APPLICABLE STANDARDS

All elements of the works shall be in accordance with the requirements of current legislation, regulations and industry standards unless otherwise stated.

The water treatment plants shall accord with all appropriate Scottish Health Technical Memoranda, Scottish Health Technical Notes, Codes of Practice and relevant British and European Standards, Scottish Water Regulations and to the approval of the local water authority.

6.0 DESIGN CRITERIA

Generally the water filtration plant shall comply with the Scottish Water Regulations and current Codes of Practice

7.0 LIAISON

Project Co. shall include for liaison with:-

Health and Safety Professionals. As well as the Health and Safety requirements of Parts A, B and C of this specification, Project Co. shall include for close liaison with Health and Safety professionals including the Trust's Health and Safety Advisors and the CDM Co-ordinator and shall comply with the CDM Regulations and all Health and Safety regulations.

Other Specialist. Project Co. shall liaise with other Specialists as necessary to ensure that all interfaces between the water treatment equipment installations and other systems are allowed for.

The Local Water Supply Undertaker. Project Co. shall liaise with Scottish Water or their licensed agents to ensure that all aspects of the installation comply with the Scottish Water Regulations.

Any other member of the Project and Board teams concerned with the planning and administration of the Water Treatment Equipment.

SYSTEM DESCRIPTION

General

Water treatment equipment shall be provided to meet user requirements and shall include membrane filtration. Separate plants shall be provided to the following areas:-

Roof Plant Room (Water Filtration plant)

Basement Tank Room

Water Filtration Plant Equipment

Twin packaged membrane filtration plant units shall be housed in the basement tank room and shall be served from the raw cold water storage tanks connected to the incoming water mains. The filtration plant shall filter the water to the criteria set out in SHTM 04-01 with 0.5 micron filtration.

The twin package filtration plant shall supply the storage tanks also housed within the basement tank room. Each package unit shall be capable of supplying 50% of the total flow required to the main tanks.

Each of the two package filtration plants shall be supplied and fitted with their respective air receivers and compressors, internal pumps, and control panels. These items are to be fitted as part of the package unit and shall be supplied by the filtration unit manufacturer.

Hourly backwash of the filter membranes shall be by a compressed air/water mix and shall discharge to a sealed holding tank within the main tank room prior to pump discharge to drain.

The twin filtration units shall be connected to the BMS and shall be fitted with a shut down warning and alarm.

MATERIALS AND WORKMANSHIP CLAUSES

S12 WATER TREATMENT EQUIPMENT

330 FILTRATION UNITS

All Incoming water for wholesome storage shall pass through a low pressure filtration system. This system shall be duplicated and served by duplicate break tanks. Each filtration unit shall be capable of supplying 50% peak water demand to the bulk cold water tanks.

Each filtration unit shall be a complete package unit including air compressor/receiver, control panel and integral pump.

Manufacturer: [TBC].
Product reference: [TBC].
Water flow rate: [TBC].
System pressure: [TBC].
System temperature: [4C-15C].
Particle removal capability: [0.5 micron].

All pipework to be in PVC.

EXECUTION:

The Project Co. shall ensure all works carried out shall be done is a safe manner and comply with Health and Safety regulations.
This shall include clean and tidy working and working in confined spaces.

COMPLETION:

The Project Co. shall protect the system from damage or interference during the works.
The Project Co. shall Test, flush and clean the system.
The Project Co. shall submit O&M's as per section
The Project Co. shall provide training as per section Y12, Y40 & Y50.
The Project Co. shall provide spares as per section Y12, Y40 & Y50.
The Project Co. defects and liability period shall be as the contract prelims.

910 DOCUMENTATION:

O& M documentation shall be issued at least three months before completion of any part of the contract.
The contents and format shall be agreed with the Board. The document shall be issued/uploaded on Aconex.

Project Co. shall provide instruction to the clients engineers and maintenance staff in the safe operation of all systems and items of equipment for an adequate and reasonable period of time based on the manufactures' recommendations and best practice. Project Co. shall provide adequate and qualified staff in order to carry out their maintenance and repairs during the defects liability period.

920 SPARES AND CONSUMABLES:

Required spares:
- Filters: [2 of each type].

Specification Check / Revision Sheet

Project	**RHSC and DCN Edinburgh Hospitals**	Project Number	**G1547**
Service (s)	**Mechanical & Electrical**	Sheet	**WW AP.1.2.7 SMcK G1547**
Performance Specification Title	**Computer Room Cooling Systems**	Date	**August 2014**
Prepared By	**MM**	Checked By	**SMcK**

Revision Ref.	Date of Revision	Page N$^{o(s).}$	Revision Details	Checked By
FT	December 2013	All	Final Tender	SMcK
FC	July 2014	All	Update for Financial Close	SMcK
FC	August 2014	All	Comments Incorporated	SMcK

RHSC and DCN EDINBURGH
COMPUTER ROOM COOLING SYSTEM

CONTENTS

1.0	**GENERAL INTRODUCTION**
2.0	**SCOPE**
3.0	**PERFORMANCE SPECIFIED SYSTEMS**
4.0	**INTERFACES AND DEMARCATIONS**
5.0	**APPLICABLE STANDARDS**
6.0	**DESIGN CRITERIA**
7.0	**LIAISON**
8.0	**SYSTEM DESCRIPTION**

1.0 GENERAL INTRODUCTION

Purpose of Document

The development of the manufacture, supply, installation, wiring, setting to work and commissioning of the works described in this document shall be undertaken by the Mechanical and Electrical Installer and is referred to in this document as “”.

To carry out the development of the design to form the installation, the Specialist shall obtain the necessary supporting documentation.

This specification relates to the single computer room cooling services for the RHSC-DCN Building.

This specification shall be read in conjunction with all other mechanical and electrical engineering services specifications and the Architectural drawings.

Fans & Pumps

All fan assemblies shall incorporate fan impeller and motors selected to provide the most energy efficient solution conforming to Section 6 regulations. All fans and pumps shall be fitted with IE2 efficiency motors to EN 60034-30:2009 as standard, and suitable for operation in ambient temperatures of 40 degrees C.

Description of Project

The new facility shall re-provide services from the Royal Hospital for Sick Children, Child and Adolescent Mental Health Service and the Department of Clinical Neurosciences in a single building adjoining the Royal Infirmary of Edinburgh at Little France.

The DCN part of the Facilities will have a physical link with the existing RIE Facilities specifically with the critical care unit.

The building is generally constructed from reinforced concrete.

The basement houses FM support facilities and the main building services heat distribution centres and electrical plant rooms.

Ventilation plantrooms are generally located at roof level and level 2.

A central Energy Centre shall be provided to the South of the hospital housing heating, CHP, standby generation, fuel storage and utility incomers.

2.0 SCOPE

The scope of work covered by this specification shall include, but not be limited to the following:-

- Computer room cooling equipment
- Power distribution to all equipment associated with the installation
- BMS interfaces

3.0 PERFORMANCE SPECIFIED SYSTEMS

The following is specifically excluded from the scope of this specification:-

- BMS and automatic control systems

4.0 INTERFACES AND DEMARCATIONS

The computer room cooling systems shall be provided as a complete working system serving the NHS-DCN Building. Project Co. shall provide information to other parties for BMS and fire alarm system interfaces.

5.0 APPLICABLE STANDARDS

All elements of the works shall be in accordance with the requirements of current legislation, regulations and industry standards unless otherwise stated.

The Fire Protection Systems shall accord with all appropriate Health Technical Memoranda, Codes of Practice and relevant British and European Standards listed in SHTM2009.

The equipment supplied shall conform with all relevant standards and regulations in force. The equipment shall be supplied with relevant Declarations of Conformity to certify compliance with the EMC directive 89/336/EEC-92/31/EEC and the Machinery Safety Directive 89/392/EEC-91/368/EEC-93/44/EEC. Also the equipment and installation shall comply with all relevant statutory requirements in force at the time.

6.0 DESIGN CRITERIA

Mains Chilled Water System

Mains Chilled Water Flow Temp	-	6°C
Mains Chilled Water Return Temp	-	12°C

Computer Room Cooling Water System

Cooling Water Flow Temp	-	6°C
Cooling Water Return Temp	-	12°C

7.0 LIAISON

The Specialist Installer shall include for liaison with:-

Health and Safety Professionals. As well as the Health and Safety requirements of this specification, Project Co. shall include for close liaison with Health and Safety professionals including the Hospital's Health and Safety Advisors and the CDM Co-ordinator and shall comply with the CDM Regulations and all Health and Safety regulations.

Specialist Installers. Project Co. shall liase with other specialist Installers as necessary to ensure that all interfaces between the Fire Detection and Alarm System and other systems are allowed for. This shall include but not be limited to:-

- Building Management System specialist
- Fire Alarm and Detection specialist

The Electrical Services Board. Project Co. shall liase with the Electrical Services Installer to provide details of:-

5. Computer room cooling power supply requirements
6. Cable tray requirements

Building Control. Project Co. shall liase, with and adhere to, the requirements of the Building Control Officer.

Any other member of the Project and Trust teams concerned with the planning and administration of the PTS.

8.0 SYSTEM DESCRIPTION

General

There is a single core server room within the hospital located on the second floor of the main building.

The main core server room air-conditioning systems shall be fed from the main chilled water system. The computer room shall be provided with an independent system via a dedicated secondary chilled water circuit having its own plate heat exchanger and circulating pumps.

CRACs shall be floor standing ‘downflow’ type and shall be capable of being fully interrogated by the building management system through the independent network protocol.

To comply with these directives appropriate national & harmonised standards have been applied. These are listed on the Declaration of Conformity, supplied with each product.

Unit cabinets shall be manufactured from galvanised sheet steel coated with epoxy baked powder paint to provide a durable finish. Internal strength and rigidity shall be provided by a welded space frame constructed of channel profile folded steel. Cabinets shall be lined internally with fire resistant 20mm foam (UL94 V0) for thermal and acoustic insulation. Cabinets shall meet the Hospital acoustic and vibration requirements. The cabinet doors are full height, hinged and key lock secured. Door arrangement shall allow flexible door opening/removal for improved access. Doors shall have rubberised door seals reduce sound breakout and eradicate leakage.

The units shall have large surface area coil(s) to optimise airflow and heat transfer, manufactured from refrigeration quality copper tubes with mechanically bonded aluminium fins.

Fins shall be coated with a non-stick acrylic film to provide additional corrosion protection and efficient surface water removal for improved performance.

Coil headers shall be circuited to ensure low water pressure drops. The cooling coils shall be mounted over a full width stainless steel condensate tray. Chilled water flow shall be via a factory fitted 3 port modulating control valve.

All coils shall be Factory pressure tested to 20Bar.

Fans shall be backward curved impellers, direct drive centrifugal fan assemblies with integral rotor mounted motor which is statically and dynamically balanced for quiet operation. Designed for high corrosion resistance, the impellers shall be laser welded aluminium with galvanised rotor and die cast aluminium EC power module. An inbuilt EC fan control module shall allow the fan to modulate from 15-100%.

Filters shall be 97mm pleated disposable panel filters in a rigid frame. Conform to BS EN 779-G4.

Access and removal from unit front. An adjustable diaphragm pressure switch fitted across the filter assembly shall monitor pressure drop which shall initiate a filter dirty alarm.

The control panel shall have fan motor contactors and overloads, transformer, sub circuit protection, volt free contacts, mains and inter-connecting terminals. The panel shall be fitted within the cabinet and be hinged for easy access to other components within the unit. The electrical control panels shall be wired to the latest European standards and codes of practice.

To ensure complete unit isolation of the electrical panel during adjustment and maintenance a door interlocking isolator shall be provided as standard.

Units shall be fitted with the microprocessor controller which shall have a real time clock and a communication port plus networking and Bac Net BMS connections. A backlit LCD door mounted display keypad assembly shall be fitted to view the unit status and allow operator adjustment.

The condensate pump shall have a reservoir with a capacity of 5 l/m at a head of 10.8m.
Leak detection tape suitable for sensing water droplets shall be supplied loose for remote mounting on site.

- Project Co. shall provide technical proposals.
- Arrangement: Vertical.
- Casing: Steel frame with acoustically lined steel panels.
- Finish: Manufacturer's standard.
  - Colour: Manufacturer's standard.
- Controls: All controls must be capable of being fully interrogated by the building management system through the independent network protocol.

Controls

The terminal cooling units shall be fitted with a microprocessor controller which provides analogue and digital control to meet a wide range of monitoring and control features including a real time clock and a communication port plus networking and BMS interface connections.

The cooling units shall be capable of being fully interrogated by the building management system through the independent network protocol.

The cooling units shall be provided with “fail safe” mode: in the unlikely event of failure the units shall automatically switch to maximum cooling output.

The cooling units shall be fitted with a display and local controls to view the status and allow operator adjustment.

The following values shall be monitored:

- Return Air Temperature
- Return Air Humidity
- Supply Air Temperature
- Cooling Water Flow Temperature
- Cooling Water Return Temperature
- Fan Speed Control
- Operating Status
- Audible Alarm

An alarm shall be generated on the BMS system under the following conditions:

- Return air temperature high limit
- Return air temperature low limit
- Return air humidity high limit
- Return air humidity low limit
- Supply air temperature high limit
- Supply air temperature low limit
- Airflow failure
- Filter change alarm
- Manual override
- Power fail reset
- Communications failure
- Maintenance (once hours run limit exceeded)

Metering

The computer room cooling's plant shall be separately metered in order to monitor the operational Power Utilisation Efficiency (PUE).

The computer room chilled water system shall be provided with heat meters in order to monitor the operational Power Utilisation Efficiency (PUE).

Electrical meters monitoring the lighting and general power for the computer rooms shall be provided separately.

Cooling Units

The cooling units shall be supplied with condensate pumps and backup drip tray drainage. The backup drip tray drainage shall fall to drain.

All cooling units shall be supplied with associated control valves which shall be compatible with the hydraulic characteristics of the cooling water system and the BMS system.

All cooling units shall be capable of having their fans replaced without shutting down that particular cooling unit.

The cooling unit shall be provided with EC motor drive fan assemblies in order to minimise the energy usage of the system.

The pipework system from the header to the cooling units shall be installed as a single length of pipe, shall be insulated and be provided with leak protection. Flexible Multi-Layer Composite Pipework (MLCP) is recommended.

Execution

All pipework and headers shall be pressure tested to at least twice the working pressure of the cooling water system.

Project Co. shall ensure all works carried out shall be done is a safe manner and comply with Health and Safety Regulations. This shall include clean and tidy working and working in confined spaces.

Specification Check / Revision Sheet

Project	**RHSC and DCN Edinburgh Hospitals**	Project Number	**G1547**
Service (s)	**Mechanical & Electrical**	Sheet	**WW AP.1.2.19 JB G1547**
Performance Specification Title	**Small Power Systems**	Date	**August 2014**
Prepared By	**PM**	Checked By	**JB**

Revision Ref.	Date of Revision	Page N$^{o(s).}$	Revision Details	Checked By
FT	December 2013	All	Final Tender	JB
FC	July 2014	All	Update for Financial Close	JB
FC	August 2014	All	Comments Incorporated	JB

RHSC and DCN EDINBURGH
SMALL POWER SYSTEMS

CONTENTS

1.0	GENERAL INTRODUCTION
2.0	SCOPE
3.0	SPECIFIC EXCLUSIONS
4.0	APPLICABLE STANDARDS
5.0	DESIGN CRITERIA
6.0	LIAISON
7.0	SYSTEMS

MATERIALS AND WORKMANSHIP CLAUSES

V40	Small Power Systems

1.0 GENERAL INTRODUCTION

Purpose of Document

The development of the design, manufacture, supply, installation, wiring, setting to work and commissioning of the works described in this document shall be undertaken by the Mechanical and Electrical Installer and is referred to in this document as

To carry out the development of the design, the Specialist shall obtain the necessary supporting documentation.

This specification relates to the Water Treatment Equipment serving the RHSC-DCN Buildings.

This specification shall be read in conjunction with all other mechanical and electrical engineering services specifications and the Architectural drawings.

Description of Project

The new facility shall re-provide services from the Royal Hospital for Sick Children, Child and Adolescent Mental Health Service and the Department of Clinical Neurosciences in a single building adjoining the Royal Infirmary of Edinburgh at Little France.

The DCN part of the Facilities will have a physical link with the existing RIE Facilities specifically with the critical care unit.

The building is generally constructed from reinforced concrete.

The basement houses FM support facilities and the main building services heat distribution centres and electrical plant rooms.

Ventilation plantrooms are generally located at roof level and level 2.

A central Energy Centre shall be provided to the South of the hospital housing heating, CHP, standby generation, fuel storage and utility incomers.

2.0 SCOPE

The scope of work covered by this Specification shall include the following:-

- Metal encased prefabricated wiring systems
- Small power installation

3.0 SPECIFIC EXCLUSIONS

The following is specifically excluded from the scope of this Specification:-

Materials and Workmanship clauses for Small Power accessories (covered by refer to Section Y65; Specification WW AP.1.2.22 Common Electrical Clauses)

4.0 APPLICABLE STANDARDS

All elements of the works shall be designed in accordance with the requirements of SHTM 06-01, NBS clause V40, IET Wiring Regulations BS 7671 (17th Ed.) IEE Guidance Note 7, MEIGaN v2.0 September 2007, BSEN60601-1-1-2001, current legislation, regulations and standards stated in materials and workmanship clauses.

5.0 DESIGN CRITERIA

Electricity Supply Characteristics

LV power characteristics: 400/230 V, 3-phase, 50 Hz, 230 V, 1-phase, 50 Hz.

Drawings

As part of the development of the design Project Co. shall prepare general arrangement drawings of the Small Power System based on the base drawings and coordinated with other services and building elements. A proposed drawing list shall be submitted with the tender.

6.0 LIAISON

Project Co. shall include for liaison with:-

Health and Safety Professionals. As well as the Health and Safety requirements of this specification, Project Co. shall include for close liaison with Health and Safety professionals including the Hospital's Health and Safety Advisors and the CDM Co-ordinator and shall comply with the CDM Regulations and all Health and Safety regulations.

Any other member of the Project and Hospital teams concerned with the planning and administration of Small Power installations.

7.0 SYSTEMS

This part of the Specification shall be read in conjunction with the attached NBS clause V40 and the Common Electrical Clauses specification, WW AP.1.2.22 which contains clauses for cables, conduits, trunking, cable supports and wiring accessories.

7.1 Prefabricated Wiring Systems

Project Co. shall supply and install a metal encased prefabricated wiring system installation complete with all necessary components as detailed in the attached NBS clause V40 to provide the required system wiring as detailed on the small power layouts.

Note also that the lighting installation specification WW AP.1.2.30 includes clause V50 which includes specific requirements for metal encased prefabricated wiring systems for the lighting installation.

7.2 Small Power System

Description

Project Co. shall supply and install the complete small power installation, including the following:-

- All cable containment required for the complete small power installation
- All wiring required for the complete small power installation
- All supports necessary for the complete small power installation
- All accessories, sockets, etc, for the complete small power installation
- Connections to equipment
- Connections to local mechanical services equipment outside of the plantrooms e.g. smoke dampers, fan coil units, over door heaters
- Connections to power supplies for specialist low current systems e.g. fire alarms, security, nurse call, etc.

General Requirements

The drawing series WW-PL-531 shall indicate the allocation of circuits to each room, together with a set of wiring 'rules' to be followed. The services drawings shall be read in conjunction with the Distribution Board Schedules which specify breaker ratings and types and cable sizes and types for final circuits. The services drawing shall also be read in conjunction with the loaded 1:50 drawings which indicate locations and ADB codes of all power outlets required by the Hospital.

All areas except where indicated below shall have flush small power installations.

The exceptions to this are:-

- plantrooms
- risers
- switch cupboards
- lift motor rooms
- ceiling voids
- switchrooms
- substations
- FM Workshops
- UPS rooms
- Basement corridors

These areas shall have surface installations.

Surface mounted installations shall have metal clad accessories.

In SHTM 06-01 Clinical Risk Category 1 and 2 areas, accessories for flush or recessed installations shall have white plastic accessory plates.

"Category 1 – Support service circulation. …… The areas include circulation spaces, waiting areas, offices and nonpatient care areas such as laboratories or finance departments.…" extract from SHTM 06-01.

"Category 2 – Ambulant care and Diagnostics. …..The areas may include patients in consultation (excluding examination) or general out-patient areas. Loss of supply may give rise to disruption, inconvenience and a reduced environmental quality but would not directly compromise patient clinical treatment and safety…" extract from SHTM 06-01.

In SHTM 06-01 Clinical Risk Category 3, 4, and 5 areas, socket outlets shall have metal accessory plates.

"Category 3 – Emergency care and Diagnostics …..These areas relate to the patient environment of group 0 under Chapter 10 in 'IEE Guidance Note 7'. Patients are not generally connected to any electro-medical equipment. However, medical monitoring or medical test equipment may occasionally be used and connected externally to the patient's body for a short or intermittent time (for example patient monitors or ultrasound machines). …." extract from SHTM 06-01. Such rooms would include treatment rooms, exam rooms, consultation rooms where examination occurs, Exercise Test Lab, Investigation room, Assessment room and Audiology booths.

"Category 4 – Patients in special medical Locations. These areas will relate to the patient environment of group 1 under Chapter 10 [now 9] in 'IEE Guidance Note 7'…. " extract from SHTM 06-01.

Category 4 circuits will be identifiable by virtue of the fact that they will be RCD protected. Bedded areas in Wards shall be considered to be Category 4 areas, as shall endoscopy rooms, ECG, EEG, nuclear medicine, emergency centre, haemodialysis, parts of category 5 areas outside the patient environment, urology treatment, ultrasound.

"Category 5 – Life support or complex surgery These areas will relate to the patient environment of group 2 under chapter 10 in 'IEE Guidance Note 7'. The areas are defined as operating theatre suites, critical care areas, cardiac wards, catheterising rooms, accident & emergency resuscitation units, MRI, angiographic rooms, PET and CT scanner rooms. Patients may have electro-medical equipment, medical monitoring or medical test equipment (for example intracardiac procedures) connected externally or internally to their bodies.. " extract from SHTM 06-01.
Category 5 circuits will be identifiable by virtue of the fact that they will be IPS protected.

Socket outlets fed by IPS units shall be double pole or un-switched, clean earth sockets, with metal front plates, colour-coded blue, engraved in white lettering 'Medical equipment only'. If white sockets are preferred, they shall be mounted on a blue background, approximately 2 cm larger than the socket. The socket to be engraved 'Medical equipment only' in blue. Engraving shall be filled to allow clinical cleaning.

The small power allocation drawings indicate the Clinical Risk Category and MEIGaN grouping of each room.

The finish shall be consistent throughout the installation.

Where accessories are flush mounted within partition walls, Project Co. shall ensure that fire and acoustic integrity are maintained. This also applies to concealed service drops within partition walls. Where services or accessories are installed on both sides of partition walls, back-to-back services drops or recessed accessory boxes shall not be permitted.

A and B side cables shall be run in separate containment up to bedhead trunking unit.

The wiring system shall generally be a metal encased prefabricated system. Armoured flexible conduits shall be run on wire cable baskets.

The small power installation shall be installed by means of metal encased prefabricated wiring systems except in areas of non demountable ceilings, such as Theatre suites, where they shall be wired by means of single core LSZH insulated copper single core cables run in a loop in conduit system whereby access to the wiring system is only at accessories. This shall also apply to conduits provided for power cabling to Theatre panels and Theatre PACS units.

Project Co. shall refer to the Architects general arrangement, wall elevations for detailed mounting locations.

Where several accessory plates are located together, these shall be mounted at the same height in a horizontal row, as appropriate, unless indicated otherwise on Architects drawings. All socket outlet fused connection unit boxes shall be fitted with an earth screw terminal pillar. Project Co. shall bond the socket outlet or fused connection unit to this terminal using green/yellow coloured LSF insulated cable in compliance with BS7671 (17th Ed.).

Note: All power circuits serving patient areas shall be provided with a 30 mA RCD (with Class A characteristics), together with the associated protective MCB at the circuit origin at the distribution board (i.e. an RCBO).

Socket Outlets

Unless otherwise specified, socket outlets shall be switched 13A, 3-pin to BS 1363.

Where socket outlets are required to be inset into cable trunking they shall be of the panel mounted type, unless noted otherwise in later sections of this specification or shown on the drawings. In metal trunking the plastic insets around the socket receptacles shall project above the surface of the metal trunking, in accordance with the British Standard.

In SHTM 06-01 Clinical Risk Category 1 and 2 areas, where sockets are to be mounted in plastic dado trunking, completely recessed plastic faced socket outlets shall be used and a suitable means of maintaining segregation provided.

Trunking in SHTM 06-01 Clinical Risk Category 3, 4 and 5 areas shall be metal, fitted with socket outlets with metal front plates, as required by SHTM 06-01.

Where sparkless switch socket-outlets are specified, they shall have single pole switches (tilting mercury pattern) which shall interlock with the plug.

Switches shall be of the micro gap pattern and sockets shall have insulating sleeves around the pin apertures. Sockets shall be shuttered on the live and neutral outlets so that entry of three pins of the plug is required to open the shutters.

Plug tops of the finger-shield pattern with insulated pins shall be provided for each outlet installed including outlets in floor outlet boxes.

All power circuits shall be provided with high integrity earthing. Refer to WW AP.1.2.25 for earthing requirements.

Small power circuits wired by means of 4mm^2 radial circuits in metal conduits will achieve high integrity earthing as a matter of course without the need for any further special measures.

Fused Connection Units

Fused connection units shall be manufactured in compliance with BS 1363 with captive fuse holder and fuse rated at 13 A, or to suit the item of equipment services, as appropriate. Where switched, the switch shall be of the micro gap pattern.

Fused connection units shall be provided with fuse carriers that remain attached to the frontplate when opened and can be padlocked for safety. Tamperproof screws on fuse carriers shall be provided for fused connection units in public areas.

Concealed conduit shall be provided from any fused connection unit to other accessories served by it (e.g. unswitched socket outlets for refrigerators).

Face plates, boxes, finishes, etc. shall be as specified for socket outlets.

The outgoing cables from fused connection units shall not be rated less than the fuse rating.

Accessories Requiring Ingress Protection

In areas where water is likely to come into contact with electrical services, accessories shall have a suitable degree of protection. In all such areas the minimum degree of protection shall be IP56. Refer to Room Data Sheets for IP protected accessories.

Cleaners Sockets

All cleaner sockets shall be engraved with the legend “CLEANERS USE ONLY” in 4 mm high black uppercase letters. Engraving shall be filled to allow clinical cleaning. Cleaners socket finishes shall match other sockets in the room.

Childproof Socket Outlets

In waiting areas or any other area where small children are likely to be present, 13 A socket outlets shall be childproof. This shall be achieved by at least meeting the requirement that the shutters permit the insertion of pins into the socket only if all three pins are simultaneously inserted.

Imaging Department Supplies

Power supplies to diagnostic imaging and radiotherapy rooms / suites shall be compliant with the MEIGaN V2.0 September 2007 document published by MHRA.

The steel wire armour of supply cables to fixed imaging equipment shall not be used as the mains supply earth conductor. Three phase supplies shall utilise 5 core cables, single phase supplies shall utilise 3 core cables.

Isolators in imaging rooms shall be lockable in the off position.

A remotely operated contactor shall be fitted in the mains supply of three phase medical devices sited adjacent the mains supply isolator and Earth Reference Bar (ERB) (see separate earthing & bonding systems specification, WW AP.1.2.25). ERB, contactor and isolator enclosures shall be white. The contactor shall isolate all three phase contacts, including the neutral, and shall be capable of interrupting maximum load. The contactor control circuit shall be on the same phase as the room socket outlets. The contactor and isolator shall both be of a grade suitable for frequent use.

Three-phase supplies feeding medical devices shall have a phase rotation and voltage monitoring device installed, except where such a device forms part of the installed equipment. This device shall prevent the contactor from energising with:

- under- or over-voltage condition on any phase
- incorrect phase sequence
- phase loss
- neutral loss
- phase-neutral faults.

The under- and over-voltage limits shall be provided by the equipment manufacturer. The monitoring device shall be interlocked to prevent disconnection of the supply during an exposure.

The contactor shall be switched ON by a green momentary push and OFF by a red push. Red emergency OFF buttons shall be located in a suitable location in the room and shall incorporate a protective shroud and key reset.

Illuminated warning signs shall derive supply from the contactor.

All accessory boxes in imaging rooms shall be plastic, including for light switches.

Illuminated warning signs

For all X-ray equipped rooms, the X-ray warning signs external to each room shall be interlocked with the equipment such that when the X-ray power supply in a room is energised the ‘radiation warning’ section illuminates, and when the equipment is in operation the “do not enter” section illuminates.

For all laser equipped rooms, the laser warning signs external to each room shall be interlocked with the equipment such that when the laser power supply in a room is energised the ‘laser in use’ section illuminates, and when the equipment is in operation the “do not enter” section illuminates.

NHS to ensure equipment is compatible with warning signs.

Sockets serving portable equipment to be provided with additional contacts for illuminated warning signs.

Controlled Drugs Cabinet Supplies

Any fused connection unit serving a controlled drugs cupboard alarm shall be installed inside the cabinets so that access to it is possible only when the cupboard is open. These connection units shall be of the unswitched type.

Lead Lined Walls

Project Co. shall review the final layout wall construction drawings and note where lead lined walls are provided. These are normally associated with the imaging department. Where lead lining is provided, all the lead lining shall run behind the recessed accessory box, or a lead plate is to be installed behind the recessed accessory box and oversized as necessary to block all possible beam angles possible through the cut out. In any case, the solution must be agreed with the Radiation Officer.

Lead lining to be bonded to the Earth Reference Bar (ERB) within the associated room.

Provisions for Catering

Freezer/ Cold Room: Kitchen in Basement and Restaurant Kitchen on 4th Floor

The freezer rooms and cold rooms in the main kitchen in the basement and the restaurant kitchen will be provided and partially fitted out by a Specialist. The lighting within the cold rooms will be provided by Catering Specialist. The small power in the cold rooms shall be installed by . Conduits will be provided by the Catering Specialist in the cold room walls terminating above the ceiling for the use of .

Project Co. shall provide a power supply to a connection point for each cold room control panel. Cabling details are indicated on the distribution board schedules.

Project Co. shall provide power supplies to the cold room condenser units.

Kitchens: Restaurant Kitchen on 4th Floor

Power supplies to catering equipment shall be provided by . Generally all fixed outlet wining points shall be installed to within 1m of the point of connection. The Catering Specialist will then be responsible for all final connections and commissioning of the equipment.

Fourth floor and basement kitchen distribution boards shall be fitted with emergency power off contactor and two shrouded knock off buttons provided.

Provisions for Workshops

Circuits serving workbenches within workshops shall be fitted with emergency power off buttons as identified on the architect's fully loaded drawings.

Core Server Room

Small power in the core server room will be provided as detailed on the power and UPS schematics.

In general terms power supplies to each cabinet shall be twin 32A ‘Commando’ sockets derived from a separate A+B side PDU.

Hub room power requirements will generally depend on the quantity of racks/ cabinets provided however as a rule each cabinet will be provided with the following:

- 1 No. 32A ‘Commando’ type socket outlets
- 1 No. 13A switched fused connection unit

Both supplied from within the Node room shall be derived from a single dedicated Node room DB.

V40 Small power systems

To be read with section Preliminaries/ General conditions.

GENERAL

110A HARD WIRED LOW VOLTAGE SMALL POWER SYSTEM WITH CONDUIT

- Origin of supply: Low voltage distribution system, as section V30.
- Final circuit cabling:
  - Types: LSZH singles, as section V32.
  - Sizes: As Circuits schedule.
- Containment: Rigid conduit, as section Y60 and Trunking or ducting, as section Y60.
- Rewireable installation: Required.
- Concealed installation: Required.
- Final connections: Required.
- Partial installation: Not required.
- Outlets:
  - Electrical accessories as section Y65 - refer to specification WW AP.1.2.22

  Common Electrical Clauses;
  - As room data sheets; and
  - As architect's load drawings at 1:50 scale.

  Completion:
  - Electrical identification: As section V80.
  - Testing and inspection: As section V39.

120 LOW VOLTAGE SMALL POWER SYSTEM WITH PREFABRICATED WIRING Generally.

- The Board shall ensure that there is at least one spare circuit available in each home run cable. Origin of supply: Low voltage distribution system, as section V30.
- Standards

  System generally: BS 8488

  Connectors: BS EN 61535 and BS EN 61984 as appropriate

  Final circuit cabling:
  - Types: Prefabricated LSZH insulated singles metal encased in flexible conduit.
  - Sizes: As Circuits schedule.
- Containment: Cable basket, as section Y63.
- Rewireable installation: Required.
- Concealed installation: Required.
- Final connections: Required.
- Partial installation: Not required.
- System components:
  - Connection cables;
  - Extender leads;
  - Home run cables;
  - Master distribution boxes;
  - Slave distribution boxes;
  - Starter leads; and
  - 'T' connector

- Outlets: - Electrical accessories as section Y65 - refer to specification WW AP.1.2.22 Common Electrical Clauses;
  - As room data sheets; and
  - As architect's load drawings at 1:50 scale.
- Accessories: Not applicable.
- Completion:
  - Electrical identification: As section V80.
  - Testing and inspection: As section V39.

PRODUCTS

335 PREFABRICATED CABLING PRODUCTS GENERALLY

- Connectors:
  - Standard: To BS EN 61535 and BS EN 61984 as appropriate. Submit certification
  - Type: Manufacturer's standard.

340 PREFABRICATED LSZH INSULATED SINGLES IN FLEXIBLE CONDUIT

- Standards:
  - Cable: To BS 7211.
  - Flexible conduit: To BS EN 61386-23. Submit certification
- Approval: British Approvals Service for Cables (BASEC) certified.
- Manufacturer: Board's choice.
  - Product reference: Board's choice.
- Flexible thermosetting insulated single core cables (LSZH singles, H07Z-K):
  - Construction: To BS 7211, table 3b.

350 CONNECTION CABLES Prefabricated wiring system.

- Manufacturer: Board's choice.
  - Product reference: Board's choice.
- Cable type: Prefabricated LSZH insulated singles metal encased in flexible conduit.
  - Number of cores: Board's choice.
  - Size: Board's choice.
- Length: Board's choice.
- Connectors:
  - Arrangement: One fully shrouded male connector and one fully shrouded female connector.
  - Poles: Board choice.

355 MASTER DISTRIBUTION BOXES Prefabricated wiring system.

- Manufacturer: Board's choice.
  - Product reference: Board's choice.
- Distribution box: Galvanized sheet steel with recessed input and outgoing connections.
- Rating: Board's choice.
- Connectors:
  - Power input connection: Hard wired via home run cable.
  - Power output connector type: Fully shrouded female connector.
- Outgoing connections:
  - Quantity: Board's choice.
  - Poles: Board's choice.

360 SLAVE DISTRIBUTION BOXES Prefabricated wiring system.

- Manufacturer: Board's choice.
  - Product reference: Board's choice.
- Distribution box: Galvanized sheet steel with recessed input and outgoing connections.
- Rating: Board's choice.
- Connectors:
  - Power input connection: Board's choice.
  - Power output connector type: Fully shrouded female connector.
- Outgoing connections:
  - Quantity: Board's choice.
  - Poles: Board's choice.

365 HOME RUN CABLES Prefabricated wiring system.

- Manufacturer: Board's choice.
  - Product reference: Board's choice.
- Cable type: Prefabricated LSZH insulated singles metal encased in flexible conduit.
  - Number of cores: 6 circuit or 9 circuit.
  - Size: Board's choice.
- Length: Board's choice.
- Connector arrangement: One fully shrouded male connector and one free cable end.

370 STARTER LEADS Prefabricated wiring system.

- Manufacturer: Board's choice.
  - Product reference: Board's choice.
- Cable type: Prefabricated LSZH insulated singles metal encased in flexible conduit.
  - Number of cores: Board's choice.
  - Size: Board's choice.
- Length: Board's choice.
- Connectors:
  - Arrangement: Board's choice.
  - Poles: Board's choice.

375 'T' CONNECTORS Prefabricated wiring system.

- Standard: To BS EN 61535. Submit certification
- Manufacturer: Board's choice.
  - Product reference: Board's choice.
- Cable type: Prefabricated LSZH insulated singles metal encased in flexible conduit.
  - Number of cores: Board's choice.
  - Size: Board's choice.
- Length: Board's choice.
- Connectors:
  - 'T' arrangement: One fully shrouded male connector and one fully shrouded female connector.

EXECUTION

610 SMALL POWER INSTALLATION

- Standard: To BS 7671.

630 INSTALLING CABLING TO SOCKET OUTLETS

- General: Wire in radial final circuits without spurs as distribution board schedules.

670 INSTALLING PREFABRICATED WIRING

- Connection arrangement: Form circuits using a male connector working away from any master distribution boxes.
- Fixing master/ slave distribution boxes: Board's choice.
- Fixing cabling:
  - Maximum distance between clips:

  Prefabricated LSZH insulated singles metal encased in flexible conduit (home run cables): 1000 mm.

  Prefabricated LSZH insulated and sheathed multi-core: 500 mm.
  - Clipped in accordance with manufacturers recommendations.
  - Bends: Not permitted within 150 mm of connectors.

COMPLETION

920 DOCUMENTATION

- Operation and maintenance instructions, record drawings & test/commissioning certificates to be compatible with Zutec system
- Operation and maintenance instructions: Submit.
- Kit of parts of prefabricated wiring system: Submit.
- Record drawings: Submit.

Specification Check / Revision Sheet

Project	**RHSC and DCN Edinburgh Hospitals**	Project Number	**G1547**
Service (s)	**Mechanical & Electrical**	Sheet	**WW AP.1.2.20 JB G1547**
Performance Specification Title	**Low Voltage Distribution**	Date	**August 2014**
Prepared By	**JB**	Checked By	**PM**

Revision Ref.	Date of Revision	Page N$^{o(s).}$	Revision Details	Checked By
FT	December 2013	All	Final Tender	PM
FC	July 2014	All	Update for Financial Close	JB
FC	August 2014	All	Comments Incorporated	JB

RHSC and DCN EDINBURGH
LOW VOLTAGE DISTRIBUTION

CONTENTS

1.0	GENERAL INTRODUCTION
2.0	SCOPE
3.0	SPECIFIC EXCLUSIONS
4.0	APPLICABLE STANDARDS
5.0	DESIGN CRITERIA
6.0	LIAISON
7.0	SYSTEMS

MATERIALS AND WORKMANSHIP CLAUSES

V30	Low Voltage Distribution System
V31	Low Voltage Switchgear
V33	Busbar Trunking
V36	Automatic Power Factor Correction Equipment
V37	Harmonic Filtering Equipment
Y67	Transient Overvoltage Surge Suppression Devices

APPENDICES

APPENDIX A	LV SWITCHBOARD CONTROL REQUIREMENTS

1.0 GENERAL INTRODUCTION

Purpose of Document

The manufacture, supply, installation, wiring, connecting, setting to work and commissioning of the works described in this document.

This specification relates to the Low Voltage Distribution system serving the RHSC-DCN Building and the associated Energy Centre.

This specification shall be read in conjunction with all other mechanical and electrical engineering services specifications and the Architectural drawings.

Description of Project

The new facility shall re-provide services from the Royal Hospital for Sick Children, Child and Adolescent Mental Health Service and the Department of Clinical Neurosciences in a single building adjoining the Royal Infirmary of Edinburgh at Little France.

The DCN part of the Facilities will have a physical link with the existing RIE Facilities specifically with the critical care unit.

The building is generally constructed from reinforced concrete.

The basement houses FM support facilities and the main building services heat distribution centres and electrical plant rooms.

Ventilation plantrooms are generally located at roof level and level 2.

A central Energy Centre shall be provided to the South of the hospital housing heating, CHP, standby generation, fuel storage and utility incomers.

2.0 SCOPE

The scope of work covered by this Specification shall include, but not be limited to the following:-

- Low voltage distribution system including switchgear and cables
- Installation of transient overvoltage surge suppression devices within the main LV switch boards
- Integration with the LV switchboards of suitable controls for the ENMS (electrical network management system).
- Busbar trunking

- Automatic Power Factor Correction equipment
- Provision for future Harmonic Filtering Equipment.
- Voltage optimisation equipment

3.0 SPECIFIC EXCLUSIONS

The following is specifically excluded from the scope of this Specification:-

- Low voltage cabling (Materials and Workmanship clause V32 covered by Specification WW.A.P.1.2.22)
- Electrical identification (Materials and Workmanship clause V80 covered by Specification WW.A.P.1.2.22)
- Conduit, trunking and ducting (Materials and Workmanship clause Y60 covered by Specification WW.A.P.1.2.22)
- Cable supports (Materials and Workmanship clause Y63 covered by Specification WW.A.P.1.2.22)
- Medium Voltage Installation (Specification WW.A.P.1.2.23)
- ENMS (Electrical Network Management system) (Specification WW.A.P.1.2.37)

4.0 APPLICABLE STANDARDS

All elements of the works shall be designed in accordance with the requirements of current legislation, regulations and standards stated in materials and workmanship clauses.

Space for maintenance & access shall be provided in accordance with SHTM 2023.

5.0 DESIGN CRITERIA

Electricity Supply Characteristics

LV power characteristics: 400/230 V, 3-phase, 50 Hz, 230 V, 1-phase, 50 Hz.

6.0 LIAISON

Project Co. shall include for liaison with:-

Health and Safety Professionals. As well as the Health and Safety requirements of this specification, Project Co. shall include for close liaison with Health and Safety professionals including the Hospital's Health and Safety Advisors and the CDM Co-ordinator and shall comply with the CDM Regulations and all Health and Safety regulations.

Project Co. shall include for liaison in conjunction with the Board with members of the Hospital's team with an interest in the planning and administration of the Low Voltage Distribution System.

Building Control. Project Co. shall liaise, with and adhere to, the requirements of the Building Control Officer.

Any other member of the Project and Hospital teams concerned with the planning and administration of the Low Voltage Distribution installation.

7.0 SYSTEMS

7.1 Low Voltage Distribution

General Description

This Specification should be read in conjunction with all other engineering services & specifications for the development.

And this part of the Specification shall be read in conjunction with NBS clause V31.

The facility shall be provided with 2 pairs of substations, as indicated on the LV schematics. The sub-stations shall be located in the basement plant rooms.

All LV equipment shall be suitable for use with 230 V/400 V single/three-phase 50 Hz four-wire and earth systems, except reduced LV systems.

Each sub-station shall comprise, 11kV ring main unit switchgear, a step down cast resin transformer and a Main LV switchboard. Each pair of sub-stations shall be interlinked on the LV side via cables or bus bar and changeover switches, one on each Main LV switchboard.

Each pair of Main LV switchboards shall be electrically interlocked to prevent the transformers being connected in parallel as indicated on the schematic drawings. The transformers are described in the MV Installation Specification, WW.A.P.1.2.23.

Low voltage air circuit breakers shall be provided on the load side of the transformers before the main LV switchboards. All main LV switchboards shall be constructed to Form 4 Type 6 with MCCBs. All sub LV switchboards shall be panel board format constructed to Form 4 Type 2.

Main LV switchgear shall be provided with electronic protection selected to allow short circuit, over-current and time grading for full co-ordination and discrimination. All ACB's shall be fitted with monitoring units to capture and relay switchgear status, energy consumption, harmonic content, operation counter and fault indication via the Electrical Network Monitoring System, ENMS as described in the ENMS Specification, WW.A.P.1.2.37 though non-critical parameters such as the operation count and harmonic content may be signalled via the BMS.

Specifically, energy metering information shall be routed to and captured by the BMS.

Open protocol industry standard software must be used. All software shall be 'backwards compatible'.

The main LV switchboards shall be provided with the following:-

- Automatic power factor correction to correct to at least 0.95 and provided with a hard wired automatic drop out facility during generator run and reset on return to mains;
- Surge protection; (including MCCB)
- Provision of voltage optimisation unit.
- Provision for future harmonic filters (MCCBs, CTs and sensing wiring plus space for free standing filters to be provided in each switchroom);
- Electronic multi-function meter connected to the BMS system as shown on LV schematics;
- Voltage and current socket for harmonic analyser;
- Thermographic screening; to allow for live thermographic testing.
- Fully rated neutral busbars;
- Spare compartments unequipped;
- Extensibility provision;
- Control section housing change-over logic and load shedding controls;
- IP 2X ingress protection rating (or better)
- Through the ENMS, remote control shall be possible of incomer switches, bus-section switches and those outgoing feeder switches which need be controllable for purposes of the generator load acceptance switching.

The sub-main LV switchboards shall be provided with the following:-

- Electronic multi-function meters connected to the BMS system as shown on LV schematics; (WW-XX-XX-SC-530-002 and 003).
- Thermographic screening; to allow for live thermographic testing.
- Fully rated neutral busbars;
- Spare compartments unequipped;
- IP 2X ingress protection rating (or better).

Motorised breakers shall be controlled and monitored via the Electrical Network Monitoring System, ENMS.

Interfaces for ENMS control shall be provided in the Main LV Switchboards to permit the ENMS to control various circuit breakers for the purpose of load control and matching the loads to the various supply scenarios (various 11kV network configurations, generator start-up or generator testing). The circuit breakers involved shall be motorised as indicated on the drawings and shall principally involve:

- For Main LV switchboards:
  - Incoming ACBs,
  - Bus-Section (Interconnector) ACBs,
  - Various outgoing ACBs and MCCBs (Plant and Lifts and Large Medical Equipment) as detailed on LV schematics (see note below about power factor correction)
- For Sub-main LV Boards:
  - Not applicable (manual operation only)

The power factor correction equipment for each of the individual main LV switchboards shall also be controlled by the ENMS. It shall be arranged such that all capacitor steps are switched out of service if the board is energised wholly by the generators or by the generators in parallel with the mains.

Sub-main LV boards do not provide for automated pick-up or shedding of load, therefore lifts and various equipment shall be controlled in the field by signal from the ENMS directly to the respective drive/control panel or contactor.

The status of all devices controlled by the ENMS (open, closed, tripped, racked out, unavailable, drive blocked, etc) shall be signalled to the ENMS for display by the ENMS on its various graphic display screens.

Control principles, behaviour tables and further details of the ENMS interfaces for Substation LV switchboards and for Sub-Main LV switchboards shall be described during detailed design.

Note that UPS Input Boards are a special case of sub-main switchboards. This is mentioned in the appendices, but the requirements are given in UPS specification.

Thermographic screening facilities shall be provided to the main LV switchboards to permit safe access for thermographic survey of the switchboard without exposure to live components. Busbar cubicles of main LV switchboards shall be fitted with perforated screens with an IP20 mesh of holes, clear Perspex sheeting or proprietary windows.

All floor-mounted switchboards shall be fitted with plinths integral to the switchboard construction.

Where indicated on the LV schematics, the main and sub-main LV switchboards shall include interlocked dual incoming isolators and bus section to permit selection of dual supplies. It shall not be possible to parallel the incoming feeds. For Main LV Switchboards, the incoming isolators and bus-section switches shall be configured as an automatic change-over. In the case of sub-main LV boards, only manual operation need be provided, and the interlocking in this case shall be mechanical and implemented by linkages or keys (Ronis or Castell types or equal and approved)

For the Main LV Switchboards, time delayed phase failure relays shall be fitted to the incomers on the LV switchboards. Similarly, phase failure relays shall be fitted to all bus sections with an adjustable 0-10s UPS module, or a suitable change-over controller shall be provided.

Main LV switchboards shall be provided with front access or alternatively front and back access and top entry provision for cabling.

Sub-main LV switchboards shall be provided with front access and top entry provision for cabling.

Generally, unless shown otherwise on the LV schematics, each department shall be provided with a minimum of two 3-phase combined lighting and power distribution boards fed from the sub-main LV switchboards with one distribution board to be fed from the A side of the LV distribution system and the other to be fed from the B side (the final circuits throughout the department to be split between each distribution board to provide further resilience).

A number of departments do not require A and B side distribution boards as indicated on the schematics. Refer to the LV Schematics as noted above and db location drawings (WW-S2-XX-PL-523 Series) for details of dual / single distribution board provision.

The distribution boards shall be contained within electrical cupboards within each department. Space within each of these electrical cupboards shall be allocated to housing ancillary components such as power supplies to nurse call panels, fire alarm interface units, security control equipment, door hold equipment and if necessary data racks for engineering systems.

Details of the protective devices, settings and fault levels and device settings shall be developed during detailed design stage.

Spare Capacity

The LV distribution network is designed to provide spare capacity in the following ways:

- Transformers – sized to accommodate 25% load growth;
- Main LV switchboards – rated to accommodate 25% load growth and a minimum 1No. spare outgoing way rated to 25% load growth;
- Sub LV switchpanels – rated to accommodate 25% load growth and a minimum 1No. spare outgoing way rated to 25% load growth;
- Departmental distribution boards – rated to accommodate 25% load growth and 25% spare ways, no future spare MCB's provided;
- Cables – sized to accommodate 25% load growth;
- Containment – sized to accommodate 25% future cabling.

Spare space in the switchboards shall be fitted with blanks which can be equipped with a circuit breaker at a later date. Breakers shall be installed in the quantities and of the frame sizes indicated on the schematics. No spare MCB's will be provided within the departmental distribution boards.

The spare ways within the pre-fabricated home run cables serving the departmental distribution boards shall be terminated within an enclosure adjacent to the distribution boards. Spare ways shall be labelled to assist identification.

Auxiliary DC Power Supply for Main LV switchpanels

An auxiliary DC power supply shall be provided for each side of the main LV switchpanel which shall be used to drive the motorised circuit breakers and bus-couplers within the main LV switch panel.

Within each main LV switchroom an A & B circuit from the local distribution board shall feed a 24Vdc battery and charger via a changeover device. The battery will then support a DC distribution board which shall drive the motorised breakers.

The battery shall be sized to provide sufficient capacity to drive all motorised devices on the associated main LV switchpanel for a minimum 6 operations. The batteries shall be VRLA with a life expectancy of 10 years.

The auxiliary DC power supplies shall interface with the BMS system to provide status indication, and mains fail, battery fail, etc. alarms.

Switch Rooms and Risers

Main switch rooms housing the main LV switch boards are sized upon generic manufacturer's data.

Final selection of Main and Sub LV Switchboards and distribution boards shall take cognisance of the space allocated.

The electrical risers have been sized assuming that final selected Sub LV Switchboards will be of a space saving Form 4 Type 2 panelboard type of construction, the smaller examples possibly being wall mounted.

The electrical risers shall be arranged so that space is allocated for Sub LV Switchboards, sub main distribution cables and low current system cables and containment.

Sub-Main Cabling

Refer to Common Electrical Clauses WW.A.P.1.2.22 and WW LV Cable Schedules for cable selection details.

Sub-main cabling shall generally be by means of XLPE/SWA/LSF multi-core armoured cables laid on cable ladders or slotted cable trays as indicated on the containment drawings. Power supply cabling to life safety and fire fighting applications is selected in accordance with the requirements of BS 8518:2010 and shall be as follows, or equal and approved. Refer to the Common Electrical Clauses WW.A.P.1.2.22, section V32, Clause 420 for full technical specification requirements of cables required for each life safety and fire fighting system.

Emergency lighting final circuits. Local central battery system.
- As Prysmian Cables FP Plus or equal and approved

Sprinkler pump and Helipad foam spray system power supplies.
- As Prysmian Cables FP600S or equal and approved

Fire lifts and escape lifts.
- As Prysmian Cables FP600S or equal and approved

Motorised fire and smoke dampers, supply and control cabling
- As Prysmian Cables FP Plus or equal and approved

Power supplies to powered smoke and heat exhaust ventilation, smoke fans, powered smoke shafts, and pressurisation.
- As Prysmian Cables FP600S or equal and approved

Powered sliding doors across escape routes.
- As Prysmian Cables FP Plus or FP600S or equal and approved

Gaseous extinguishing systems.
- As Prysmian Cables FP600S or equal and approved

Power supply cabling to fire fighting applications shall be selected and routed in accordance with the requirements of BS 8519 and LPC Technical Bulletin 210. Note shall be taken that cable cross sectional areas and protective device ratings are determined for these circuits against requirements in the latter document, and which allow for passage of locked rotor current for certain time and for cable selection based on 150% of the largest envisaged full load current. Selections have been made on the basis of provisional pump data, and before installing cables for these circuits, the Board shall submit for cable design review full details of the pumps and other loads to be served, and the measured cable route length intended.

Moulded Case Circuit Breakers

This part of the Specification shall be read in conjunction with NBS clause V31.

The MCCB tripping mechanism shall be as detailed in the Device Settings Schedules.

Where plug-in type MCCB's are used It shall be possible to extract and/or rapidly replace the circuit breaker without touching the connections on the base. The plug-in configuration shall be made by use of a "plug-in kit" with a fixed device. A safety trip shall be fitted to avoid connecting or disconnecting the power circuits under load conditions, the safety trip shall cause automatic tripping if the device is ON, before engaging or withdrawing it.

Except where otherwise indicated or agreed, MCCBs shall have the following number of poles:-

Single phase	-	Single pole (SP)
Three phase	-	Three pole (3P)

Each switch shall be provided with facilities for padlocking in the "OFF" position. In addition, switches serving sprinkler pump supplies and helipad foam spray pump supplies shall have operating handles lockable also in the 'ON' position.

Motorised breakers are shown on the schematics.
Such circuit breakers shall:

- incorporate a motor drive mechanism for closing of the breaker or charging of a spring actuator as applicable
- incorporate an electrical shunt trip coil (so that opening of the breaker can be effected with minimal delay by an electrical signal)
- be configured for local & remote operation through electrical signals
- shall include an interlock to prevent remote closing if the breaker has tripped on a protection/fault operation.

Low Voltage Air Break Switches and Switch Disconnectors

This part of the Specification shall be read in conjunction with NBS clause V31.

Low voltage air break switches shall comply with the following.

Motorised breakers are shown on the schematics.

Air break switches shall have the following number of poles:-

Single phase	-	Double pole (DP)
Three phase	-	Four pole (4P)

Each switch shall be provided with facilities for padlocking in the "OFF" position. In addition, switches serving life safety systems such as sprinkler pumps, helipad foam spray pumps, smoke extract/clearance systems, stair/lift pressurisation systems, fire fighting lifts, etc. shall be lockable also in the 'ON' position.

To prevent accidental contact with live parts, switches of the withdrawable chassis isolating type shall have either fully shrouded fixed contacts or insulated cover plates.

Switches in individual compartments within a switchboard shall have an earth terminal, and the construction and cabling arrangements shall both meet the degree of protection specified for the switchboard and have the operating mechanisms interlinked with the access door.

Switch disconnectors in plant rooms shall have the following features:

- Minimum IP54 protection,
- insulated plastic enclosure,
- fitted with padlockable rotary red handle,
- fitted with 2 x N.O. auxillary contacts,
- earth terminal,
- switch interlocked with cover.

Final selection of switch disconnectors: Project Co. shall utilise manufacturer's switch disconnector co-ordination tables to ensure that his selected circuit protective devices and selected switch disconnectors co-ordinate at the fault levels present at the point of installation of the selected switch disconnector.

Low Voltage AC Contactors and Coils

Contactors shall comply with BS EN60947 and shall be of utilisation category AC-3.

Contactors shall be electro-magnetically operated, suitable for local and remote control via an in-built LOCAL/OFF/REMOTE control selector switch.

Contactor operating coils shall be AC suitable for the phase to neutral voltage of the supply and shall be protected by means of a cartridge fuse.

The number of main poles shall be as indicated on the LV schematics, for feeds from sub LV panels, or distribution board schedules for final circuits. As a minimum one pair of auxiliary contacts shall be provided unless stated otherwise.

Individually mounted contactors shall be fitted with integral isolating switches having a rated duty, a load rating and utilisation category compatible with the respective contactor.

Individually mounted contactors and their associated control operating components shall be housed in pressed steel.

The enclosures for contactors installed inside buildings shall provide a minimum degree of protection of IP4X, and in plantrooms IP54. The enclosures for contactors installed externally shall provide a minimum degree of protection of IP65.

Coils for switching relays, contactors and other applications shall be capable of withstanding a 15% drop in voltage without the armature or switching apparatus dropping out of position. Key resets shall be provided to re-energise the coils following mains failure; unique keys shall be supplied.

Contactors being controlled by the ENMS are identified on the LV schematics and shall be located in the cupboard adjacent to the associated sub LV switchpanel or departmental distribution board. The contactors shall be a latching type and controlled by a pulsed ENMS signal which shall operate in the following manner:

- Load pickup - ENMS pulsed signal closes contacts which remain held closed;
- Load shed - ENMS pulsed signal opens contacts which remain open;
- Loss of mains - contacts open and remain open.

Metering

This part of the Specification shall be read in conjunction with NBS clause V31.

Electronic multi-function meters connected to the BMS system shall be provided at the main LV switchboards and elsewhere as detailed on the LV schematics.

Distribution Boards

This part of the Specification shall be read in conjunction with NBS clause V31.

Final circuit distribution boards shall be Type A or B with miniature circuit breakers (MCB) and residual current breakers with overload (RCBO) located within risers and dedicated cupboards.

Distribution boards shall be surface wall-mounted and shall comprise the components, labels and inter-connections, all as indicated on the design drawings and elsewhere in this Specification. Final selection of distribution boards shall take cognisance of the space allowed upon the architectural layouts. Refer to materials & workmanship clauses for specification details.

All distribution boards shall be provided with fully opening sheet metal doors (wardrobe doors may be required).

Removable gland plates shall be provided on the top and bottom of all distribution boards, suitable for conduit, trunking and cable, except in the case of prefabricated wiring systems for lighting and small power final circuits, prefabricated plug and socket arrangements may be factory fitted to the top of the distribution boards for outgoing home run cables. In this case, distribution boards shall be internally pre-wired to the plug and socket arrangement at the top of the distribution board. Wiring for unused circuits shall be terminated at ‘dummy’ mcbs and shall not be left unconnected. One further three phase unequipped way shall be left spare for future use by non-standard circuits. Distribution boards have been sized on the basis that prefabricated home run cables will be 6 circuit or 9 circuit or a mixture of both.

Neutral and earth bars shall have the same number of terminals for outgoing cables as there are outgoing ways on the board, and these shall be numbered to relate to the outgoing ways. Particular note shall be taken of the quantity of final circuit earths in accordance with Section 543.7 within Chapter 54 of BS 7671 (17th Ed.), and this shall be reflected in the earth bar terminal capacity.

Outgoing devices shall be arranged so that they may be removed with ease.

Distribution board bus bar assemblies shall have switched connectors to connect each outgoing device to the bus bars.

Cable containment requirements routes for final circuits are shown on the drawings. These shall be developed during detailed design stage.

The distribution boards shall accept MCBs, RCDs, RCBOs or MCCBs as indicated on the distribution board schedules. Outgoing devices are specified elsewhere in this Specification.

Distribution boards are sized with capacity for 25% future growth of load. Spare ways will not generally be equipped.

Generally, distribution boards need no automation, and need not transmit any monitoring signals to the ENMS.

However consideration will be given to controlling larger loads e.g. kitchen, restaurant this shall be itemised in the detailed design and a power reinstatement matrix produced.

Miniature Circuit Breakers

This part of the Specification shall be read in conjunction with NBS clause V31.

Miniature Circuit Breakers (MCBs) shall comply with the following.

All MCBs incorporated in distribution boards shall be capable of clearing the prospective short circuit current indicated on the LV Schematics.

All MCBs shall be of the type which provides positive means of isolation.

MCBs shall be padlockable in the OFF position and two isolation devices and padlocks shall be provided for each distribution board.

Residual Current Devices

RCBOs shall be of the type which occupy a single way.

RCDs shall have the same short circuit withstand capability as MCBs and shall be capable of making, carrying and breaking the full short circuit current. This requirement shall apply whether or not the RCD is the sole or main circuit breaker at any point in the system.

Unless used as circuit breakers, RCDs shall be connected in series with the overload and short circuit devices in the system. RCDs shall not be used as the sole means of protection against direct contact.

Every RCD shall be provided with a test button and an engraved, clearly legible label stating **“TEST FREQUENTLY”**.

The residual current characteristic of RCDs and RCBOs shall be A type (not to be confused with type A, B, C, D overcurrent characteristic of MCBs and RCBOs).

Isolated Power Supplies for Areas of Medical Use

General

The Board shall provide isolated power supply units for areas of medical use. These will provide Type IT power supplies to meet the requirements of SHTM 06-01, BS.7671 Guidance Note 7 Chapter 9 and MEIGaN guidance published by MHRA.

The medical locations covered by isolated power supplies are as indicated on the LV schematics and small power circuitry drawings.

Each isolated power supply unit shall incorporate:-

- A safety isolating transformer to DIN VDE 0551: Part 1 (minimum efficiency 95%)
- A local alarm and test module
- Remote alarm and test stations (normally in staff bases or operating theatre surgeon's panels)
- Transformer insulation temperature monitor
- A load monitor
- A distribution board, ratings and numbers of outgoing 20A type B miniature circuit breaker ways as indicated on the distribution board schedules (Note that MCBs serving IPS circuits shall be DP therefore the DB shall be purchased with the appropriate number of ways)
- Output 230 V, 50 Hz, single phase, earth free
- Protective Earth Terminal
- Earth Fault Detection System

kVA ratings of IPS units shall be as indicated on the LV schematics.

The units shall comply with EN 60439-1: Part 1, DIN VDE 0107:1994-10, DIN VDE 0660 Part 500 and IEC439-1: Part 1. The insulation monitor shall comply with DIN VDE 0413:T2/01.73 or ASTMF 1209-89.

Each isolated power supply unit shall monitor the insulation impedance to earth of the transformer secondary circuit. It shall raise an alarm if this falls below an adjustable pre-set value and shall trip the IPS unit if it falls below a second lower pre-set adjustable limiting value.

Each isolated power supply insulation monitor shall continuously indicate the insulation impedance by means of a bar graph LED indicator.

A load monitor shall raise an alarm if the load rises to a pre-set adjustable limit and a temperature monitor shall alarm if the transformer temperature rises above a pre-set limit.

It shall be possible, locally and at the remote stations, to test the operation of the above monitors from the appropriate remote station.

It shall be possible to operate any isolated power supply unit for 4 hours at 150% rated load without tripping the thermal protection.

The remote alarm/test stations shall incorporate indication of the operational status of the appropriate unit. The Earth Fault Detection System shall identify which outgoing circuit is in fault, both locally and at the remote alarm/indicator unit. The status of the UPS supporting the IPS shall also be indicated at remote alarm/indicator units. Remote indication of IPS circuit faults and UPS status at staff bases shall be incorporated within an integrated panel which shall include nurse call and fire alarm indication. UPS and IPS alarms shall also be available at the BMS.

For the operating theatres, the remote alarm/indicator units shall be provided in the theatre.

The alarm/indicator units in the theatres shall be built into the surgeon's panel. shall allow for providing this free issue to the surgeon's panel manufacturer and wiring to them when installed in the theatres.

The operational status of the mains supply to each isolator power supply shall be relayed to the building management system. NO/NC Volt-free contacts and terminals shall be provided to allow connection of the building management system wiring into isolated power supply unit.

The isolated power supplies shall be contained within metal floor standing cabinets having an ingress protection rating of at least IP42. They shall have lockable front covers and shall incorporate suitable ventilation facilities for the designed duty. They shall be provided as single, dual or triple units as indicated on the schematic drawings. Within each dual or triple unit, each module shall be totally electrically independent of the others and shall be electrically and physically segregated.

The design has been based on the following Bender/ Starksroom supplied dimensions:-

Single:	375 W x 425 D x 1900 H
Dual:	625 W x 425 D x 1900 H
Triple:	875 W x 425 D x 1900 H

Alternative manufacturers may be used if equal & approved and alternative units can be accommodated within the space allocated.

IPS Distribution Boards

IPS Distribution boards shall comply with the following:-

- Distribution boards and MCBs with the requirements of NBS clause V31.

- All distribution boards shall be covered by the doors of the Isolated Power Supply Unit, which shall have locks of an approved make. All live parts shall be fully shrouded by an insulated mask fitted internally giving access to MCB toggles only, with the doors open.

Note that circuit wiring fed from IPS units is earth free and as such both lines are designated as live (+115V and -115V) conductors and shall be colour identified as such.

MCBs shall be double pole.

Transient Overvoltage Surge Suppression Systems

Transient overvoltage surge suppression devices shall be installed within the main LV switch boards as detailed within this specification and LV schematics.

The Lightning Protection Specialist shall undertake a risk assessment to determine if any additional transient overvoltage surge protection devices are required elsewhere; this is out with the scope of this specification. Refer to the Lightning Protection Performance Specification, WW-218, for further details.

Imaging Department Supplies

Power supplies to diagnostic imaging and radiotherapy rooms / suites shall be compliant with the MEIGaN V2.0 September 2007 document published by MHRA.

Supplies to fluoroscopy machines and those imaging machines used for invasive procedures shall be provided with dual final sub-circuit cables via automatic changeover devices as described elsewhere within this specification. Single final sub-circuit cables shall be provided to all other imaging machines as detailed on the LV schematics.

The steel wire armour of the final sub-circuit cables to fixed imaging equipment shall not be used as the mains supply earth conductor. Three phase supplies shall utilise 5 core cables, single phase supplies shall utilise 3 core cables. Distribution circuit cables from the main LV switchboards to sub LV imaging switchpanels shall not be provided with an integral earth conductor.

Isolators in imaging rooms shall be lockable in the off position.

A remotely operated contactor shall be fitted in the mains supply of three phase medical devices sited adjacent the mains supply isolator and Earth Reference Bar (ERB) (see separate earthing & bonding systems specification, WW.A.P.1.2.25). ERB, contactor and isolator enclosures shall be white. The contactor shall isolate all three phase contacts, including the neutral, and shall be capable of interrupting maximum load. The contactor control circuit shall be on the same phase as the room socket outlets. The contactor and isolator shall both be of a grade suitable for frequent use.

Three-phase supplies feeding medical devices shall have a phase rotation and voltage monitoring device installed, except where such a device forms part of the installed equipment. This device shall prevent the contactor from energising with:

under- or over-voltage condition on any phase
incorrect phase sequence
phase loss
neutral loss
phase-neutral faults.

The under- and over-voltage limits shall be provided by the equipment manufacturer. The monitoring device shall be interlocked to prevent disconnection of the supply during an exposure.

The contactor shall be switched ON by a green momentary push and OFF by a red push. Red emergency OFF buttons shall be located in a suitable location in the room and shall incorporate a protective shroud and key reset. Locations are indicated on the 1:50 loaded drawings.

Illuminated warning signs shall derive supply from the contactor.

7.2 Busbar Trunking

Description

This part of the Specification shall be read in conjunction with NBS clause V33.

Distribution of LV power within the risers shall be by three-phase vertical bus-bar trunking with full size phase, neutral and earth conductors. Should a full size earth conductor not be provided then the metal casing shall be utilised to provide the required cross sectional area in excess of that required. A minimum of 3No tap offs shall be provided at each floor to serve distribution boards for lighting and power.

Each tap off shall contain a circuit breaker to provide full electronic time graded fault protection.

7.3 Automatic Power Factor Correction Equipment

This part of the Specification shall be read in conjunction with NBS clause V36.

Power factor correction units complete with multiple automatic detuned capacitor banks shall be provided for each side of each main LV switchboard, refer to LV schematics for details. The unit shall correct to at least 0.95 and be provided with a hard wired automatic drop out facility during generator run and reset on return to mains.

The Board shall perform the capacitor bank selection and scheme design, based on the following:

- Capacitors shall be rated at higher voltage than the system voltage to account for increased voltage being expected on the capacitors due to the presence of detuning reactors. If no other proposal is made by the Board and accepted, the capacitor rated voltage shall be no less than 110% of the system voltage.
- On each side of the main LV switchboard an automatic detuned power factor correction scheme shall be installed. Capacitor bank sizes shall comprise 4 to 6 steps of capacitors, but subject to there being no need to use capacitor step sizes below 25kVAr (this step size equating to the equivalent reactive power rating at nominal system voltage).

Each bank has been sized for the respective ‘A’ or ‘B’ side loads, with summation CT’s on bus-section and incomers so that each bank responds to the net load on each section of the board (i.e. each relay responds to the load on its end of the busbar, regardless of whether the power flows through the natural incomer or via the bus-section switch).

- Each bank shall include a reactive power relay, wired to monitor and respond to the reactive content of the current to be corrected (i.e. the current through the respective incomer, or through summated incomer & bus-section paths as appropriate)
- A panel mounted indicating instrument shall be mounted near each reactive power relay to show the corrected power factor of the overall load served by the respective section of busbar,
- The control wiring or control relay itself shall permit manual or automatic operation of each power factor correction scheme (selectable by panel mounted control switch(es) or by switches on the relay facias),
- Under manual control, an operator shall be able to switch individual steps in or out of service, and a timed interlock feature shall prevent energising of a capacitor that has recently been energised and may not be adequately discharged (Indicator lamps shall indicate when a capacitor step is unavailable for such reason),
- Under automatic operation, the reactive power relay shall switch capacitor steps in and out of service as necessary to limit the reactive power drawn (and thereby maintain the target power factor). The relay shall operate with a switching algorithm and/or time delay feature which prevents energising a capacitor step which has not had time to discharge to a safe level.
- Unless otherwise agreed the detuning reactors (inductances) shall be selected with ratings which (when calculated with the power factor correction capacitor steps) correspond to a detuning frequency between 211 and 218Hz.
- Provision shall be made, on each capacitor bank for inputs, status, alarm and quantitative signals from/to the ENMS and/or BMS. The required points/signals list shall include at least the following:
  - Input signal – Generator operation
  - Output signal (status) - Bank active/inhibited
  - Output signal (status) - Bank selected off Auto
  - Output signal (alarm) – General alarm
  - Output signal (quantity/measureands) – VARs compensation (or, if agreed, Power factor. Envisaged port RS485 Modbus, but final selection to be made to suit the ENMS equipment).

7.4 Harmonic Filtering Equipment (Future)

Refer to NBS clause V37.

7.5 Labels to Life Safety Systems

This part of the Specification shall be read in conjunction with NBS clause V31, section 970.

For electrical circuits serving fire sprinkler pumps, fire-fighting foam spray system, fire alarm panels and fire-fighters' lifts, prominent labels shall be affixed to the switchpanel from which the power supply is derived, indicating the function of the circuit and warning against it being switched off. Additionally, if the circuit will remain live even after the board's main incoming switch is opened, such fact shall be similarly communicated.

7.6 Automatic Transfer Switches for Life Safety Circuits

7.6.1 Introduction

This part of the Specification shall be read in conjunction with NBS clause V31 (in particular its sub-clause 380) and with BS EN 60947-6.1.

For circuits supplying fire-fighters' lifts and sprinkler systems, and for other life safety functions as may be indicated or necessary (e.g. helipad lighting, smoke vents, smoke extract fans, etc.) dual supplies shall be provided by means of diverse routes to an automatic transfer switch to be installed in the same fire compartment as the life safety equipment/plant itself.

The automatic transfer switch shall be a change-over device fed from two sources and which latches into either position without the need for continued application of electrical control power. It shall be a 4-pole change-over device, with the neutral breaking after (and making before) the corresponding phase switching operation. A bypass/isolator switching arrangement shall be provided to permit manual connection of the load to either source and isolation of the transfer switch itself for test or maintenance

7.6.2 Automatic Transfer and Bypass-Isolation Switch

a) General, Make and Standards:

The required ratings and configurations shall be as indicated on the drawings and in any schedules applicable. The expected manufacturer & range is ASCO (Emerson) 7000 series, (or Schneider Series or equivalent)

Each automatic transfer switch shall, as denoted on the drawings, be either:

- a basic automatic transfer switch with open transition (i.e. break before make), or
  a delayed transition automatic transfer switch,

Automatic Transfer switches shall comprise withdrawable switch units and preference will be given to types where:

- for the basic transfer switch a single operator drives a double throw power transfer switch mechanism, or
- for the delayed transition transfer switch two operators drive independently two single throw power switch mechanisms and these are arranged to introduce a deliberate delay between disconnecting one source and connecting the other (for applications where out-of-phase conditions between the two sources might affect the loads if switching took place)

The entire switch shall be factory assembled and tested.

b) Latching/mechanically-held Transfer Switch:

The transfer switch shall be electrically operated and mechanically held (positively latched) in either position and unaffected by momentary outages. The switch shall be mechanically interlocked to ensure that the load can be energised from only one of the two possible sources.

Auxiliary contacts on the switch mechanism, and signal contacts at the controller, shall permit transmission of status information to a remote fire control room, remote lamp indicator panel, local lamp indication and a data acquisition network (BMS or ENMS).

c) Bypass-Isolation Switch

A bypass-and-isolation switch system shall provide manual bypass of the load to either source and permit isolation of the automatic transfer switch for test or maintenance. Bypass to the load-carrying source shall be accomplished with no interruption of power to the load (make before break contacts).

After switching into a bypass condition, it shall be possible to isolate the transfer switch mechanism by withdrawing the switch mechanisms/carriage from the fixed part of the enclosure. For the purpose of testing all aspects of the switch operation, a method shall be provided for retaining/reconnecting the control connections to the transfer switch after the main (power) circuit has been isolated. It shall also be possible to isolate all power, control and auxiliary circuits should full isolation be required.

d) Controller

A microprocessor based controller shall be provided to sense and analyse the voltage supply conditions on each incomer (voltage, frequency, phase & rotation) and operate the transfer switching equipment. It shall be equipped to communicate to an electrical network monitoring system through volt-free contacts and a serial communication module, and shall drive two remote lamp indicator panels (the latter for firefighters' information). All external connections shall be wired to a common terminal block.

The controller shall include a phase co-incidence monitor which, by permitting or delaying transitions according to degree of synchronisation between the two sources, shall control transfer so that motor load inrush currents do not exceed normal starting currents, and shall not require external control of power sources.

All controller settings shall be readily accessible and displayed and shall be easily adjustable.

The controller shall include rechargeable battery back-up (using a 10-year life battery) to safeguard all important information (programme, setting parameters, real time clock & calendar, etc.).

e) Enclosure

The enclosures shall be suitable for the areas in which they are to be installed, and the requirements shall be taken as:

- Plantrooms IP54
- Elsewhere IP 30

Labelling shall be in accordance with Section 7.5 of this specification.

f) Operational Behaviour

Transfer from primary source to reserve, and retransfer from reserve source to primary shall be effected according to principles and timing delays along the following lines:

Automatic transfer & retransfer:

i. On interruption of supply on either incomer (source) a timer powered from stored energy shall allow an adjustable time delay up to 6 seconds during which no transfer shall occur. The delay is intended to prevent the switch responding to momentary power outages, and to allow time for the various substation switchboards to effect their own auto change-overs on the LV distribution system (to select between substation 'A' & 'B' sides and route a healthy supply to the primary side input on the automatic transfer switch).

ii. On detected loss of supply on the primary source, and if the reserve supply is available and within satisfactory limits, the switch shall wait for an adjustable period and then transfer the load to the reserve supply. The waiting period (adjustable between 0 and 3000 seconds, but envisaged as being set between 1 and 9 seconds) is intended to allow controlled take-up of load on the reserve supply (staggered take-up across various ATS units).

iii. If the reserve supply is not immediately available, transfer need not take place until the reserve supply has:

- become live and been measured as within acceptable limits, and
- been allowed an adjustable time to stabilise (0 to 6 seconds range, initially likely to be set at 3 seconds), and
- been subjected to the deliberate waiting period as described in (ii) above.

iv. If after waiting for the time delays set above at (i) & (ii), however, there is no supply on either the primary source or the reserve source, the transfer switch shall simply await the appearance of supply on one of the inputs, and shall respond to the first to appear, subject to the 0-6 second confirmation time delay to check that the returned supply is stable. In the event that both sources return simultaneously to healthy conditions, the logic shall select the primary source as the preferred choice and behave as if retransferring the loads to the primary source. (See (iv) below).

v. On restoration of power supply to the primary source, the control scheme shall allow a 0 – 6 second confirmation delay to assess the restored supply as healthy, and then retransfer the load to the primary source, subject to any intentional delays introduced for retransfer operations. Two time delay modes (which are independently adjustable) shall be provided on re-transfer from reserve source to primary source. One time delay shall be for actual primary power restoration and the other for the test mode function. The time delays shall be adjustable from 0 to 60 minutes, but are envisaged as being set initially in the range 2 minutes for the real condition and 0.1 minutes for the test condition. The intentional time delay shall be automatically bypassed if the reserve source fails during the retransfer process, in which case the primary source shall then be reconnected immediately.

vi. If, in the absence of the primary source, the reserve source fails while carrying the load, the control scheme shall automatically prepare the switch for retransferring the load to the first source to become available, as per (iii) above.

Manually initiated transfer:

Where transitions from one source to the other are to be manually initiated, transitions and retransfers shall be effected, using delay periods and checks as above.

g) Additional Features

One or more test switches shall be provided to permit simulation of a primary source failure, and restoration to normal conditions after completion of the test.

LED indicating lights shall be provided on the operating fascia to show as appropriate:

- Primary source available & healthy
- Reserve source available & healthy
- Primary source connected to load
- Reserve source connected to load

Repeat signals for the same conditions shall be transmitted to a remote fire control room, and in the case of firefighters' lifts additionally to lamp indicator panels installed adjacent to the firefighters' lift shafts at the Ground Floor.

In addition to signal contacts mentioned already, the automatic transfer switch shall provide signal contacts for communicating to a remote monitoring system (the ENMS or Electrical Network Management System) at least the following. All signal contacts shall be wired to an easily accessible terminal block.

- Alarm - ATS Controller alarm (power supply fail, watchdog timer, extended time on non-auto operation, etc.)
- Alarm – Primary source fail/out-of-limits
- Alarm – Reserve source fail/out-of-limits
- Status indication – Primary source available & healthy
- Status indication – Reserve source available & healthy
- Status indication – Primary source connected to load
- Status indication – Reserve source connected to load
- Status indication – ATS test switch(es) active
- Status indication – ATS bypassed to primary supply
- Status indication – ATS bypassed to reserve supply
- Status indication – ATS Isolated

A full duplex RS485 interface shall be installed in the ATS controller to enable serial communications. The serial communications shall be capable of a direct connect or multi-drop configured network. This module shall allow for the seamless integration of existing or new communication transfer devices. The interface shall allow transmission of all setting data, operating parameters, and status & alarm conditions.

h) Remote indicator panels:

For each instance where an automatic transfer switch is applied to serve a firefighters' lift, a remote IP44 indicator panel shall be supplied, installed and commissioned to provide illuminated lamp indication to firefighters regarding the status of the supplies serving said lift:

- Primary source available & healthy
- Reserve source available & healthy
- Primary source connected to load
- Reserve source connected to load

The indicator panel shall be located in accordance with and provide the functions required of it under BS 9999 (clause 29) and BS 5588-5 (clause 14.3).

All interconnecting cabling shall be run within the respective fire protected lift/stair core or shall be fire resistant, rated for 120 minutes fire survival time according to BS 8519 (as Prysmian Cables FP600S) or equal and approved.

V30 Low voltage distribution systems

To be read with Preliminaries/ General conditions

GENERAL

110 LOW VOLTAGE DISTRIBUTION SYSTEM

- Connection to low voltage supply: at transformer secondary of step down transformers. Refer to LV schematic diagrams.
- Switchgear: Cubicle switchboards, as section V31.
- Cable type: Single-core XLPE/ AWA/ LSZH and Multi-core XLPE/ SWA/ LSZH, as section V32 - refer to Specification WW.A.P.1.2.22 Common Electrical Clauses.
- Rewireable installation: Required.
- Concealed installation: Required in occupied spaces.
- Containment: Cable ladders and Cable trays, as section Y63 - refer to Specification WW-532-247 Common Electrical Clauses.
- Accessories: Cable cleats, as section Y63 - refer to Specification WW-532-247 Common Electrical Clauses.
- Transient over-voltage surge suppression devices for mains power supplies, as section Y67 - refer to Specification WW.A.P.1.2.27 Lightning Protection Systems.
- Completion:
  - Electrical identification: As section V80 - refer to Specification WW.A.P.1.2.22 Common Electrical Clauses.
  - Testing and inspection: As section V39 - refer to Specification WW.A.P.1.2.21 Electrical Testing and Inspection.

SYSTEM PERFORMANCE

220A GRADING STUDY

The calculations forming the basis of the design of the LV distribution system are theoretical based upon cable lengths measured from drawings, theoretical fault levels, voltages and impedances and Schneider Electric protective device data which may or may not correlate with those finally selected. Project Co. shall undertake a grading study based upon the actual installed measured characteristics of the LV distribution system and actual equipment selected.

The study shall be undertaken under all ‘worst case’ conditions i.e. mains healthy, on minimal generator supply, mains and generators in parallel, and taking into account the effect of the CHP units on fault levels.

- Scope: Complete low voltage distribution system.
  - Qualifications of study author: Member of the Institute of Electrical Engineers (IEE).
- Fault calculations: Include fault impedance, and short circuit fault current analysis.
- Protective devices: Coordinate the selection and adjustment of protective device settings to achieve discrimination throughout the fault level range. Grade so that a fault on any outgoing branch circuit is cleared by the switching device installed in the faulted branch circuit without affecting the other outgoing branch circuits. Demonstrate discrimination using time-current coordination curves with single line diagrams, in the study report. See also V31 clause 375A for co-ordination of switch disconnectors with circuit protective devices.

- Manufacturers' details and recommended settings: Include in study report.
- Study report: Submit.
  - Format: A4 hard copy.

EXECUTION

420 INSTALLING LOW VOLTAGE DISTRIBUTION SYSTEMS

- Standard: To BS 7671.
- Layout: Position cabling and equipment to provide safe and easy access for operation and maintenance.

COMPLETION

920 DOCUMENTATION

- Operation and maintenance instructions, record drawings & test/commissioning certificates to be compatible with proposed document management system
- Operation and maintenance instructions: Submit.
- Record drawings: Submit.
  - Number of copies: 2.

V31 Low voltage switchgear

To be read with Preliminaries/ General guidance

PRODUCTS

310 LOW VOLTAGE SWITCHGEAR GENERALLY

- Switchgear: Factory built.
- Free standing switchgear: Provide lifting bolts within reinforced top frame.
- Neutral terminations: Match current carrying capacity of phase conductor.
- Insect proofing: Cover assembly openings with non-combustible and non-corroding insect proof mesh.

320 DISTRIBUTION BOARDS AND CONSUMER UNITS Generally

- Standard: To BS EN 60439-3.
- Manufacturer: Board's choice.
  - Product reference: Board's choice.
- Distribution board and consumer unit type tests: Fully type tested.
  - Approval: ASTA certified.
  - Evidence of certification: Required.
- Enclosure:
  - Ingress protection to BS EN 60529: IP31 generally, and IP54 in plantrooms.
  - Material: Metal.
  - Finish: Powder coated.
  - Colour: Manufacturer's standard.
- Locking mechanism: Cylinder locks with the same key for all distribution boards.
- Incoming device:
  - Type: Switch-disconnector.
  - Rating: As Circuit schedules.
  - Poles: 2P or 4P.
- Busbars and connections: Fully shrouded.
  - Position within enclosure: Locate in same position relative to protective device for each pole.
- Neutral and earth bars: Individual terminal for each outgoing circuit.
- Outgoing devices:
  - Type: As Circuit schedules.
  - Poles: As Circuit schedules.
  - Quantity: As Circuit schedules.
- Spare current carrying capacity (minimum): 25%.
- Identification:
  - Neutral and earth bar terminals: Label with the outgoing circuit reference.
  - Cable terminations: Label with circuit reference, with push-on plastics markers.
- Accessories:

330 CUBICLE SWITCHBOARDS Main LV Switchboards

- Standard: To BS EN 60439-1.
- Manufacturer: Board's choice.
  - Product reference: Board's choice.

- Switchboard type tests: Fully type tested.
  - Approval: ASTA certified.
  - Evidence of certification: Required.
- Short-time withstand current (1 s): 50kA.
- Enclosure: Manufacturer's standard.
- External design type: Multi-cubicle.
- Intended location: Indoors.
- Mobility: Stationary.
- Internal separation: To BS EN 60439-1 National Annex.
  - Form: 4 type 6.
- Busbar and connections: Required.
- Incoming device: W (withdrawable).
  - Type: As drawings.
  - Rating: As drawings.
  - Poles: 4.
- Outgoing devices: D (disconnectable).
  - Type: Circuit breakers.
  - Poles: 4.
  - Quantity: As drawings.
- Spare current carrying capacity (minimum): 25%.
- Spare plug-in MCCB bases to be provided as indicated on LV schematics.
- Auxiliary circuits: D (disconnectable).
- Terminals: Suitable for the connection of copper conductors.
- Service conditions:
  - Pollution degree category: 2.
  - EMC environment: B.
  - Special conditions: None.
- Anti-condensation heater and thermostat: Required.
- Full length copper earth bar mounted on top of switchboard: Required.
  - Size: Board's choice.
- Mounting arrangement for Electricity Distributor's metering equipment: Not applicable.
- Identification:
  - Neutral and earth bar terminals: Label with the outgoing circuit reference.
  - Cable terminations: Label with circuit reference, with push-on plastics markers.
- Accessories:
  - Digital multi-function metering equipment;
  - Safety matting; and
  - Switchgear tripping units

  Where indicated on the LV schematics outgoing MCCBs shall be metered. Incoming ACB’s shall be metered.
- ENMS & BMS control modules to be provided
- Protective devices to be AC with the exception of bus-couplers which shall be 24Vdc capable of 6 operations.

330B PANEL BOARDS Sub Switchboards in Risers

- Standard: To BS EN 60439-1.
- Manufacturer: Board's choice.
  - Product reference: Board's choice.
- Switchboard type tests: Fully type tested.
  - Approval: ASTA certified.
  - Evidence of certification: Required.
- Short-time withstand current (1 s): 36kA.
- Enclosure: Manufacturer's standard.
- External design type: Panel board.
- Intended location: Indoors.
- Mobility: Stationary.
- Internal separation: To BS EN 60439-1 National Annex.
  - Form: 4 type 2.
- Busbar and connections: Required.
- Incoming device: D (disconnectable).
  - Type: As drawings.
  - Rating: As drawings.
  - Poles: 4.
- Outgoing devices: D (disconnectable).
  - Type: Circuit breakers.
  - Poles: 4.
  - Quantity: As drawings.
- Spare current carrying capacity (minimum): 25%.
- Spare plug-in MCCB bases to be provided as indicated on LV schematics.
- Auxiliary circuits: D (disconnectable).
- Terminals: Suitable for the connection of copper conductors.
- Service conditions:
  - Pollution degree category: 2.
  - EMC environment: B.
  - Special conditions: None.
- Full length copper earth bar mounted on top of switchboard: Required.
  - Size: Board's choice.
- Mounting arrangement for Electricity Distributor's metering equipment: Not applicable.
- Identification:
  - Neutral and earth bar terminals: Label with the outgoing circuit reference.
  - Cable terminations: Label with circuit reference, with push-on plastics markers.
- Accessories:
  - Digital multi-function metering equipment;
  - Safety matting; and
  - Switchgear tripping units: Where indicated on the LV schematics outgoing MCCBs shall be metered.

360 PROTECTIVE DEVICES GENERALLY

- Operation:
  - Power factor: Continuously monitored.
  - Handles: Not to be removable.
  - Locking: Provide for padlocking in the OFF position.
  - Rated duty: Uninterrupted.

365 CIRCUIT BREAKERS- ACB

- Standard: To BS EN 60947-2.
- Manufacturer: Board's choice.
- Door interlocks: Prevent enclosure doors being opened while circuit breakers are closed.
- Properties:
  - Short-circuit breaking capacity: As Circuit schedules.
  - Where practicable, circuit breakers shall be selected so that their service breaking capacity Ics is equal to their ultimate breaking capacity Icu.
  - Where the characteristics of the selected circuit breaker are such that Ics < Icu then Ics shall exceed the prospective short circuit current at the point of installation of the circuit breaker.
  - Rating: As Circuit schedules.
  - Utilization category: B.
  - Interrupting medium: Air.
  - Design: Moulded case.
  - Operating mechanism: Independent manual operation.
  - Isolating type: Required.
  - Provision for maintenance: Maintainable.
  - Method of installation: Withdrawable.
  - Ingress protection to BS EN 60529: IP40.
  - With RCD: No.
  - Mechanical interlocking: refer to clause V31 560.
  - To be supplied with auxiliary contacts/control module for ENMS/BMS monitor/control.

365A CIRCUIT BREAKERS- MCCBs (GENERALLY)

- Standard: To BS EN 60947-2.
- Manufacturer: Board's choice.
- Door interlocks: Prevent enclosure doors being opened while circuit breakers are closed.
- Properties:
  - Short-circuit breaking capacity: As Circuit schedules.
  - Where practicable, circuit breakers shall be selected so that their service breaking capacity Ics is equal to their ultimate breaking capacity Icu.
  - Where the characteristics of the selected circuit breaker are such that Ics < Icu then Ics shall exceed the prospective short circuit current at the point of installation of the circuit breaker.
  - Rating: As Circuit schedules.
  - Utilization category: B.
  - Interrupting medium: Air.
  - Design: Moulded case.
  - Operating mechanism: independent manual operation.
  - Isolating type: Required.
  - Provision for maintenance: Maintainable.
  - Method of installation: Plug-in. 4 pole
  - Ingress protection to BS EN 60529: IP40.
  - With RCD: No.
  - Mechanical interlocking: refer to clause V31 560.

365B CIRCUIT BREAKERS- MCCBs (ENMS/BMS)

- Standard: To BS EN 60947-2.
- Manufacturer: Board's choice.
- Door interlocks: Prevent enclosure doors being opened while circuit breakers are closed.
- Properties:
  - Short-circuit breaking capacity: As Circuit schedules.
  - Where practicable, circuit breakers shall be selected so that their service breaking capacity Ics is equal to their ultimate breaking capacity Icu.
  - Where the characteristics of the selected circuit breaker are such that Ics < Icu then Ics shall exceed the prospective short circuit current at the point of installation of the circuit breaker.
  - Rating: As Circuit schedules.
  - Utilization category: B.
  - Interrupting medium: Air.
  - Design: Moulded case.
  - Operating mechanism: independent manual operation.
  - Isolating type: Required.
  - Provision for maintenance: Maintainable.
  - Method of installation: Plug-in. 4 pole
  - Ingress protection to BS EN 60529: IP40.
  - With RCD: No.
  - Mechanical interlocking: refer to clause V31 560.
  - To be supplied with auxiliary contacts/control module for ENMS/BMS monitor/control.

375A SWITCH-DISCONNECTORS Loose gear.

- Standard: To BS EN 60947-3.
- Manufacturer: Board's choice.
  - Product reference: Board's choice.
- Properties:
  - Short-time withstand current (1 s): will vary depending upon fault level and device nominal rating. Grading study to confirm co-ordination of selected switch disconnectors and circuit protective devices.
  - Rating: as indicated on LV schematics and plans.
  - Poles: as indicated on LV schematics and plans.
  - Utilization category: AC-23 generally or AC-3 for starting, accelerating and stopping of motors.
  - Operation: Frequent (category A).
  - Isolating type: Required.
  - Terminals: Suitable for the connection of copper conductors.
- Enclosure: Required.
  - Ingress protection to BS EN 60529: IP31. (IP54 in plant rooms)
  - Material: Polycarbonate.
  - Finish: Manufacturer's standard
  - Colour: Manufacturer's standard.

380 AUTOMATIC TRANSFER SWITCHING EQUIPMENT (TSE) FOR LIFE SAFETY EQUIPMENT.

- Standard: To BS EN 60947-6.1.
- Manufacturer: ASCO (Emerson), though others may be considered if supported by declaration of conformity/variance from specification.

- Product reference: Submit proposals, and allow for product model which includes bypass switching from either supply, and for isolation of load if required.

- Rated operational current (Ie): As Circuit schedules and drawings - unless otherwise indicated these will be for AC 50Hz current and 4-pole configuration.
- Classification:
  - Short circuit capability: CC.
  - Method of controlling transfer: ATSE.
- Properties:
  - Method of operation: Electromagnetic.
  - Operating sequence: Refer to Section 7.6 in the M&E Specification.
  - Operating mechanism: Interlocked to prevent simultaneous connection to both primary and alternative supplies.
  - Utilization category: AC-33A.

390 RESIDUAL CURRENT CIRCUIT BREAKERS WITH INTEGRAL OVERCURRENT PROTECTION

- Standard: To BS EN 61009-1.
- Manufacturer: Board's choice.
- Properties:
  - Short-circuit breaking capacity: As Circuit schedules.
  - Rating: As Circuit schedules.
  - Poles: As Circuit schedules.
  - Sensitivity: 30 mA.
  - Time delay: Not required.

400 MINIATURE CIRCUIT BREAKERS

- Standard: To BS EN 60898-1
- Manufacturer: Board's choice.
- Properties:
  - Short-circuit breaking capacity: As Circuit schedules.
  - Where practicable, circuit breakers shall be selected so that their service breaking capacity Ics is equal to their ultimate breaking capacity Icu.
  - Where the characteristics of the selected circuit breaker are such that Ics < Icu then Ics shall exceed the prospective short circuit current at the point of installation of the circuit breaker.
  - Rating: As Circuit schedules.
  - Poles: As Circuit schedules.

435 DIGITAL MULTI-FUNCTION METERING EQUIPMENT

- To be compatible with MODBUS protocol read over site protocol
- Manufacturer: Board's choice.
  - Product reference: Board's choice.
- Display: LCD.
- Ingress protection to BS EN 60529: Match assembly enclosure.
- Metering functions:
  - Voltage between phases (V);
  - Voltage between phases and neutral (V);
  - Phase currents (A);
  - Frequency (Hz);

- Power factor;
- Active power (W);
- Reactive power (V·A(r));
- Active energy (kW·h);
- Apparent power (V·A);
- Current demand (A);
- Active power demand (W);
- Apparent power demand (V·A);
- Peak current demand (A);
- Peak active power demand (W);
- Peak apparent power demand (V·A); and
- Pulsed output (kW·h).

- Mounting: Recessed into switchgear assembly or integral to MCCBs if appropriate.

440 INDICATOR LAMPS

- Lamp type: Clustered LED with bezel. Standardize lamp type.
- Lens colour: To BS EN 60073.
- Lamp mounting: Recessed.
- Common lamp test facility: Required.
- Access for lamp replacement: Externally from enclosure front.

445 PADLOCKS AND KEYS

- Manufacturer: Board's choice.
  - Product reference: Board's choice.
- Locking mechanism: Six lever.
- Material: Brass.

465 SAFETY MATTING

- Standard: To BS 921.
- Manufacturer: Board's choice.
  - Product reference: Board's choice.
- Thickness (minimum): 6.5 mm.
- Width (minimum): 900 mm.
- Length (minimum): Match low voltage switchgear assembly.

470 SWITCHGEAR TRIPPING UNITS

- Manufacturer: Board's choice.
  - Product reference: Board's choice.
- Enclosure: To BS EN 62208.
  - Material: Manufacturer's standard.
  - Method of fixing: Wall mounting.
  - Intended location: Indoor.
  - Ingress protection to BS EN 60529: IP31.
  - Mechanical protection to BS EN 62262: IK01.
  - Rated insulation voltage: Submit proposals.
  - Lockable hinged door: Required.
  - Finish to enclosure and supporting framework: Board's choice.
  - Colour: Board's choice.
- Incoming supply protection: Miniature circuit breaker to BS EN 60898.
- Charger type: Constant voltage current limiting.
  - Operating temperature range: -10°C to 45°C.

- Battery type: VRLA.
- Output:
  - Type: d.c. (direct current).
  - Voltage: As ENMS/BMS (24Vdc).
- Digital voltmeter: Required.
- Indicator lamps:
  - Mains supply healthy.
  - Mains supply fail.
  - Charger fail.
  - Float charge.
  - Boost charge.
  - Low voltage.
  - High voltage.
  - Positive and negative earth fault alarms.
  - Low electrolyte (vented cells only).
- Common fault relay contact: Volt free.
- Vented battery labelling: Describe the treatment required following contact with the electrolyte and warn of the explosion risk caused by naked flames.

FABRICATION

515 PROPOSALS

- Content: Include the following:
  - Overall dimensions.
  - Degree of ingress protection.
  - Protection against electric shock.
  - Form of internal separation and details of busbar and terminal shrouding.
  - Mounting and fixing details.
  - Builder's work requirements and plinth details.
  - Fault level and rated short circuit characteristics.
  - Functional unit details.
  - Details of internal and external paint systems and colour finishes.
  - Door swings.
  - Access panel details.
  - Schedule of labels.
  - Dimensioned general arrangement drawings, plans, elevations and sections.
  - Shipping sections.
  - Gland plate details.
  - Routing of cabling within assembly.
  - Busbar arrangements, links and supports.
  - Internal controls, instrument and meter wiring diagrams.

540 LAYOUT

- Phase sequence: Set-out phase sequence for phases L1, L2, and L3, from left-to-right, top-to-bottom, and back-to-front when viewed from the front of the assembly.
- Fuseholders: Mount such that fuses can be withdrawn towards the operator and away from live parts.

- Heights of components (from finished floor level to underside of component):
  - Equipment requiring operation or maintenance: 500-1600 mm.
  - Instruments: 1200-2000 mm.
  - Emergency switching devices: 800-1600 mm.
- Busbars and connections:
  - Supports: Insulated.
  - Identification: Provide 25 mm wide colour bands to busbars at 500 mm intervals with a minimum of one band in each compartment.
  - Future extensions: Pre-drill busbars for future extensions and extend busbar droppers into spare functional unit locations.

560 WITHDRAWABLE DEVICES

- Mounting: Mount within assembly on a withdrawable carriage with racking gear for insert and withdrawing.
- Gear to positively fix devices in the following positions: Connected, test-and-isolated, disconnected.
- Interlocking: Interlock to prevent devices being inserted or withdrawn unless in a tripped condition.
  - Closure: Prevent devices being closed unless in either the connected or test-and isolated position.
- Discharge of stored energy: Automatic by racking operation.
- Labelled automatic shutters: Locate over exposed connections.
  - Padlock facility: Required in the closed position.

580 FACTORY INSPECTIONS

- Notice before inspection and testing: 14 d.
- Equipment for inspection and testing: All switchgear assemblies.
- Factory inspections:
  - Fabrication: Inspection required.
  - Assembly completed, busbars exposed and functional units assembled: Inspection required.
  - Factory testing of assembly: Inspection required.

EXECUTION

620A INSTALLING SWITCHGEAR GENERALLY

- Switchgear cubicles: Arrange in modular form to facilitate future extension.
- Clearance (minimum):
  - Front access switchgear: 800mm access space in front, over and above any space required for openable doors or withdrawable gear.
  - Rear access switchgear: 800mm access space in front, over and above any space required for openable doors or withdrawable gear, plus 800mm behind and 800mm at each end.
- Fixing equipment: Fix independently of wiring installation with zinc electroplated fasteners.
  - Indoor equipment: Fix using internal lugs.
  - Outdoor equipment: Fix using external lugs.
- Extension boxes: Provide where necessary.
- Gland plates: Non-ferrous for single core cables.

640 INSTALLING METERING EQUIPMENT

- Digital metering equipment: Connect to building management system.

650 INSTALLING CURRENT TRANSFORMERS

- Identification details: Mount current transformers so that polarity markings and name plate details are easily viewed in situ.

670 INSTALLING SAFETY MATTING

- Front access equipment: Install safety matting in front of the equipment.
- Rear access equipment: Install safety matting in front of and behind the equipment.
- Installation: Fix securely to the floor.
  - Location: In front of main LV switchboards.

COMPLETION

910 TESTING AND COMMISSIONING GENERALLY

- Standard: To BS 7671.

920 TESTING AND COMMISSIONING OF SITE-ASSEMBLED SWITCHGEAR

- Notice before testing and commissioning: 7 d.
- Switches and circuit breakers: Vacuum clean.
- Protective devices settings: Configure to match the grading study.
- Routine testing and commissioning: Submit results.
- Switchboard monitoring: Continuous for 30 minutes following first energizing.
- Additional inspection and testing:
  - Check levelling and alignment of assembly.
  - Check operation of instruments and metering devices.
  - Check and adjust tightness of busbar connections and supports
  - Check tightness of bolted connections.
  - Check busbar joints with ductor resistance measurements.
  - Check earth connections at compartments, switches and earth electrodes.
  - Check clearance of live parts from direct contact.
  - Check polarity and phase sequence of protective devices.
  - Check operation of protective devices using secondary and primary current injection.
  - Manually operate protective devices.
  - Carry out earth fault protection simulation tests.
  - Check functional operation of circuit breakers.
  - Check operation of switch tripping devices.
- Inspection and test results: Submit.

930 TESTING AND COMMISSIONING OF SWITCH TRIPPING DEVICES

- To be tested as per details within WW Electrical Inspection & Testing specification, WW-532-202
- Tripping function: Verify correct operation.
- Indicators: Verify correct operation.
- Results: Submit.

935 SPARES AND CONSUMABLES

- Manufacturer's recommended spares: Supply two sets.
- Operating handles for circuit breakers and switches: One per device.

940 SPARE TOOLS

- Tools: Supply the tools, necessary for maintaining the equipment, including racking handles and a torque spanner.
- Tool cabinet: Include name plate, labelled shelves and non-lockable door. Size for storing racking handles, special tools, spare lamps, spare fuse links and other equipment necessary for satisfactory assembly operation.
  - Location: Board's choice.

960 PADLOCKS AND SPARE KEYS

- Quantity per item of switchgear: 2.
- Padlock keys: Two for each padlock.
- Padlock identification: Stamp padlock (describing its function on schedule).
- Keys for switchgear door locks: Supply 2 of each key type.

970 LABELLING

- Switchgear terminals: To BS EN 60445.
- Anti-condensation heaters: Provide caution notices advising against accidental switching off.
- Standby power: Provide danger warning notices stating that assemblies may be energized from more than one source.
- Indicator lamps: Label each lamp describing its function.
- Fuses, terminal blocks and other assembly components: Label describing their purpose.
- Spare fuses: Label, describe their rating and associated outgoing ways.
- Cabinets for padlocks and spare keys: Label.

980 CALIBRATION CERTIFICATES

- Certificates of calibration for meters and instruments: Submit.

V33 Busbar trunking

To be read with Preliminaries/ General conditions

PRODUCTS

320A POWER BUSBAR TRUNKING HORIZONTAL BUS BARS WITHIN PLANTROOMS

- Standard: To BS EN 60439-2. Submit certification.
- Type: Low voltage.
- Manufacturer: Board's choice.
  - Product reference: Board's choice.
- Assembly: Fully type-tested.
- Current rating: As detailed on LV schematics.
- Configuration: As detailed on LV schematics and plantroom plans.
- Place of installation: Indoor but suitable for plant room environments.
- Attitude: Horizontal.
- Protection against electric shock: Submit proposals.
- Prospective rated short circuit current (1 s): As detailed on LV schematics.
- Casing:
  - Standard: To BS EN 62208.
  - Material: Steel.
  - Finish: Corrosion-resistant paint.
  - Colour: Submit proposals.
  - Ingress protection to BS EN 60529: IP54.
- Conductors: Board's choice.
- Supports: Board's choice.
- Accessories: Sealed jointing sleeves.
  Board's choice.

320B POWER BUSBAR TRUNKING VERTICAL BUSBAR RISERS

- Standard: To BS EN 60439-2. Submit certification.
- Type: Low voltage.
- Manufacturer: Board's choice.
  - Product reference: Board's choice.
- Assembly: Fully type-tested.
- Current rating: As detailed on LV schematics.
- Configuration: As detailed on LV schematics and plans.
- Place of installation: Indoor within electrical risers.
- Attitude: Vertical.
- Protection against electric shock: Submit proposals.
- Prospective rated short circuit current (1 s): As detailed on LV schematics.
- Casing:
  - Standard: To BS EN 62208.
  - Material: Steel.
  - Finish: Corrosion-resistant paint.
  - Colour: Submit proposals.
  - Ingress protection to BS EN 60529: IP4X.
- Conductors: Board's choice.
- Supports: Wall brackets.
- Accessories: Sealed jointing sleeves.
  Board's choice.

320C POWER BUSBAR TRUNKING LINKING MAIN LV SWITCHBOARDS
Included as alternative option to cables.
Busbar trunking which connects two separated main LV switchboards and thus for part of its route leaves the switchrooms shall be fire rated to 2 hours.
Busbar which connects two main LV switchboards in immediately adjacent switchrooms and passes directly through a shared wall need not be fire rated.
Penetrations through fire walls shall be fire sealed.

- Standard: To BS EN 60439-2. Submit certification.
- Type: Low voltage.
- Manufacturer: Board's choice.
  - Product reference: Board's choice.
- Assembly: Fully type-tested.
- Current rating: As detailed on LV schematics.
- Configuration: As detailed on LV schematics and plantroom plans.
- Place of installation: Indoor but suitable for plant room environments.
- Attitude: Horizontal and vertical.
- Protection against electric shock: Submit proposals.
- Prospective rated short circuit current (1 s): 50kA.
- Casing:
  - Standard: To BS EN 62208.
  - Material: Submit proposals.
  - Finish: submit proposals.
  - Colour: Submit proposals.
  - Ingress protection to BS EN 60529: IP54.
- Conductors: Board's choice.
- Supports: submit proposals. For 2 hour fire rated bus bars the supports shall also withstand the effects of fire for 2 hours.
- Accessories: Sealed jointing sleeves.

340 TAP-OFF UNITS GENERALLY: PLANTROOM AND VERTICAL RISING BUSBARS
- Standard: To BS EN 60439-2. Submit certification.
- Type: Plug-in.
- Manufacturer: Board's choice.
  - Product reference: Board's choice.
- Rating: As detailed on LV schematics.
- Phase: Three phase for three phase distribution boards and single phase for single phase distribution boards.
- Assembly: Partially type-tested.
- Circuits: To match busbar trunking.
- Accessories: Each tap off to be sealed with a blanking plate when not in use in order to maintain required IP rating.
- 4 pole circuit-breaker with interlocks to prevent live loads being connected or disconnected.

350 FEED UNITS END FEED UNITS
- Standard: To BS EN 60439-2. Submit certification.
- Type: End feed.
- Manufacturer: Board's choice.
  - Product reference: Board's choice.
- Circuits: To match busbar trunking.

- Accessories: Riser base support unit.
  Submit proposals.
  IP54 rating in plantrooms. IP4X in risers.

370 FIRE BARRIER UNITSFOR BUSBAR TRUNKING RUNNING THROUGH FIRE COMPARTMENTS AND AT EACH FLOOR

- Standard: To BS EN 60439-2. Submit certification.
- Manufacturer: Board's choice.
  - Product reference: Board's choice.
- Fire protection: Submit proposals. To suit fire rating of compartment boundary.
- Circuits: Match busbar trunking.
- Accessories: Submit proposals.

EXECUTION

605 INSTALLING BUSBAR TRUNKING GENERALLY

- Joints: Manufacturer's jointing fittings. Maintain rigidity of trunking across joint.
  - Number of joints: Minimize.
  - Lengths of trunking: Maximize.
  - Open ends: Blank using manufacturer's removable end caps.
  - Electrical continuity: Maintain at each joint with a copper link fitted on the outside of the trunking.
- Connections to trunking covers: Minimize. Submit proposals for lid removal.
- Electrical continuity of covers: Electrically continuous with the trunking or provide protective conductors.
- Access: Provide space around trunking to permit access for installing and maintaining cables. Set out access with covers on a continuous face to allow cabling to be laid in throughout its entire length.
- Trunking passing through building fabric openings: Provide fixed trunking covers and extend these 50 mm from both sides of the opening.

620 INSTALLING POWER BUSBAR TRUNKINGGENERALLY.

- Generally: In accordance with BS 7671.
- Location: As detailed on electrical services layouts.
- Expansion joint interval: At each joint, integral to system design.
- Supports and fixings:
  - Supports: Submit proposals.
  - Finish and colour: Match trunking.
  - Locations where moisture may occur: Corrosion resistant, selected to prevent deterioration by electrolytic action.

630 INSTALLING TAP OFF UNITS HORIZONTAL BUS BARS IN PLANTROOMS.

- Generally: In accordance with BS 7671.
- Location: As drawings.
- Tap-off point intervals: as required by plant layout.

630B INSTALLING TAP OFF UNITS RISING BUS BARS.

- Generally: In accordance with BS 7671.
- Location: As drawings.
- Tap-off point intervals: 3 tap-off outlets per floor, always positioned at the same height above the floor.

640A INSTALLING FEED UNITSGENERALLY.

- Generally: In accordance with BS 7671.

650A INSTALLING FIRE BARRIER UNITSGENERALLY.

- Generally: In accordance with BS 7671.

COMPLETION

910 CLEANING

- Trunking: Clean immediately before energising.

920 TESTING AND COMMISSIONING GENERALLY

- Standard: To BS 7671.

930 TESTING AND COMMISSIONING OF SITE-ASSEMBLED BUSBAR TRUNKING

- Notice before testing and commissioning: 5 working days.
- Protective devices settings: As detailed in electrical specification and LV schematics.
- Routine testing and commissioning: Submit results.
- Additional inspection and testing:
  - Check and adjust tightness of busbar connections and supports.
  - Check tightness of bolted connections.
  - Check busbar joints using ductor resistance measurements.
  - Check earth connections.
  - Check clearance of live parts from direct contact.
  - Carry out earth fault protection simulation tests.
- Inspection and test results: Submit.

950 LABELLING

- Busbar terminals: To BS EN 60445.

960 DOCUMENTATION

- Operation and maintenance instructions, record drawings & test/commissioning certificates to be compatible with Zutec system
- Drawings: Submit, showing the busbar trunking and tap-off units.

V36 Automatic power factor correction equipment

To be read with Preliminaries/ General conditions

PRODUCTS

310 AUTOMATIC POWER FACTOR CORRECTION EQUIPMENT GENERALLY. Compensation for harmonic content shall be by means of an automatic capacitor bank with blocking reactors (de-tuned filters).

- Operation:
  - Power factor: Continuously monitored.
  - Differences between the required power factor and the actual setting: Rectified by adding or removing capacitor banks.
- Enclosure: Separate.
- Power capacitors: Integral.
- Main isolation: Integral.
  - Type: Circuit breaker.
  - Operating handle: Padlock loop.
  - Mounting: Front of panel.
- Controls: Solid state microprocessor based.
  - Illuminated display: Required.
  - Selection of required power factor: Adjustable between 1.00 and 0.75.
  - Operating modes: On, off and automatic.
  - Power factor sensing and control: Automatic.
  - Capacitor banks: Switched individually.
  - Identification of energized capacitor banks: LED indicating lamps.
  - Undervoltage sensing: Disconnects capacitor banks at pre-set adjustable under voltage and upon supply failure.
  - Alarms:
  - Capacitor overload;
  - Frequency not detected;
  - Loss of capacitance;
  - Low power factor;
  - Overcurrent;
  - Overtemperature;
  - Overvoltage;
  - Undervoltage;
  - Excessive voltage total harmonic distortion (THD).
  - Mounting: Front of panel.
- Remote monitoring output: Connect to central controls and BMS, as section Y40. - Signals: Alarms.
- Current transformers: Type, configuration and ratio to suit sensing and mounting conditions.
- Contactors: Three pole, rated for repetitive high inrush switching duty.

320 CAPACITOR BANK SIZE

- Number of capacitor banks: To suit total requirement, provided in banks of 25kVAr and 50kVAr.

330 PERFORMANCE OF POWER FACTOR CORRECTION EQUIPMENT

- Power factor when corrected: Minimum 0.95 lagging.
- Capacitor bank size and number of stages: Submit proposals.
- Power factor equipment sizing calculations: Submit.

350 SEPARATE ENCLOSURESGENERALLY

- Manufacturer: Board's choice.
  - Product reference: Board's choice.
- Purpose: To house all power factor correction equipment.
- Material: Board's choice.
- Finish to enclosure and supporting framework: Board's choice.
  - Colour: Board's choice.
- Internal separation to BS EN 60439-1 National Annex: Form 4 type 6.
- Ingress protection to BS EN 60529: IP31.
- Mechanical protection to BS EN 62262: Board's choice.
- Incoming cabling access: Top entry.
- Outgoing cabling access: Top entry.
- Cable termination chambers with gland plates: Required.
  - Conductor termination size (minimum): As detailed in electrical specification and LV schematics.
- Mounting: Floor.
- Doors:
  - Internally hinged with padlock loop.
  - Interlocked with controls or main isolator to de-energize capacitors when door is opened.

370 ILLUMINATED DISPLAYS

- Type: LED or LCD.
- Indicate:
  - Required and actual power factors: Accuracy to within 1% of measured value.
  - Capacitor banks in use.
  - Bank reconnection delay.
  - Real and reactive currents.
  - Voltage THD.
  - System alarms.

410 POWER CAPACITORS

- Standards: To BS EN 60831-1 and BS EN 60831-2.
- Type: Dry, metallized dielectric, self-healing.
  - Encapsulation: Vacuum liquid treated with thermosetting resin within plastic container.
- Manufacturer: Board's choice.
  - Product reference: Board's choice.
- Capacitor housing: Sheet steel enclosure filled with inorganic, inert and fire proof granules.
  - Thermal equalizers: Required.
- Voltage rating: 440 V.
- Dielectric Loss: 0.2W/kVAr.

EXECUTION

610 INSTALLING POWER FACTOR CORRECTION EQUIPMENT

- Separate enclosures: Arrange in modular form to facilitate future extension.
- Clearance (minimum):
  - refer to requirements for switchboards.
- Fixing equipment: Fix independently of wiring installation with zinc electroplated fasteners.
- Indoor equipment: Fix with internal lugs.

- Outdoor equipment: Fix with external lugs.
- Extension boxes: Provide where necessary.
- Gland plates: Non-ferrous for single core cables.
- Close coupled switchgear: Interconnect.
  - Cable type: Multi-core XLPE/ SWA/ LSZH, as section V32.
  - Containment: Cable tray, as section Y63.

620 POWER FACTOR ANALYSIS

- Data logging: As section V30.

680 FACTORY INSPECTIONS

- Not required

COMPLETION

910 INSPECTION, TESTING AND COMMISSIONING GENERALLY

- Standard: To BS 7671.
- Notice before testing and commissioning: 7 d.
- Capacitors, wiring, components, connections and equipment installation: Inspect.
- Operation of instruments and displays: Check and confirm correct operation.
- Controls: Commission and adjust for optimum power factor correction.
- Testing and commissioning results: Submit.

V37 Harmonic filtering equipment (If required)

To be read with Preliminaries/ General conditions

PRODUCTS

310 ACTIVE FILTERS PROVISIONAL ALLOWANCE
Project Co. shall make space allowance plus dedicated breaker, CTs and sensing wiring for the post occupation installation of 2 no. active filters on each of the A and B sides of each main LV switchboard. Refer to clause 620 below for details of post occupation harmonic analysis survey to be carried out by to determine the precise specification of active harmonic filters.

Project Co. shall allow to revisit the site during the post occupancy period to carry out the survey and to fit, whilst planning for minimal disruption, any necessary active filters. The space allowance for the post occupation installation of filters may be wall space or floor space.

EXECUTION

610 GENERAL INSTALLATION
- Standard: To BS 7671.

620 SURVEY
- Objectives: **Post completion. In the period immediately after occupation of the building and the commissioning of client supplied equipment, carry out a harmonic analysis survey. Determine the level of harmonic content within the electrical installation, recommend mitigation measures to comply with Energy Networks Association G5/4-1 and determine specification of active filters if necessary**.
- Scope of survey: Carry out tests without interfering with the plant, including analysis of harmonics from 2nd to 25th order.

630 INSTALLING HARMONIC FILTERS
- Point of installation: Main LV switchboards as detailed on LV schematics.
- Mounting: Floor mounted free standing.
- Clearance (minimum):
  - Front access: Manufacturer's standard.
  - Rear access: Manufacturer's standard.
  - Top access: Manufacturer's standard.
  - Bottom access: Manufacturer's standard.
  - Side access: Manufacturer's standard.
- Gland plates: Form common slot to all holes to prevent eddy currents.

640 INSTALLING CLOSE COUPLED ACTIVE FILTERS
- Close coupled active filters: xxxx
- Close coupled switchgear: Interconnect.
  - Cable type: LSZH singles, as section V32.
  - Cable size: As detailed on LV schematic and electrical specification.
  - Containment: Trunking, as section Y60.
- Control cables between close coupled active filters: Interconnect.

650 INSTALLING CURRENT TRANSFORMERS (CTS)

- Mounting: In direction of current flow as indicated on CT.
- Connection to filter:
  - Cable type: Manufacturer's standard.
  - Cable size: Minimum 0.75 mm².
  - Containment: Trunking, as section Y60.
- Connecting to filters: With cables provided by manufacturer. Where cables are of insufficient length, extend with terminal block and equivalent cable.

COMPLETION

910 INSPECTION, TESTING AND COMMISSIONING GENERALLY

- Standard: To BS 7671.
- Commissioning of filters: By manufacturer.
- Notice before testing and commissioning: 7 d.
- Filters, CTs, wiring, components, connections and equipment installation: Inspect.
- Operation of instruments and displays: Check and confirm correct operation including:
  - Supply current (rms) L1, L2, L3 and neutral current.
  - Load current (rms) L1, L2, L3 and neutral current.
  - Supply THD % L1, L2, L3.
  - Load THD % L1, L2, L3.
  - Supply voltage.
  - Load level % L1, L2, L3.
  - Detailed load current spectrum display.
  - Detailed supply current spectrum display.
  - Reactive compensation.
  - Selection of harmonic orders for mitigation.
  - Number of parallel connected filters.
  - Alarm functions.
  - Communication port function.
  - Identification function.
- Controls: Commission and adjust for optimum harmonic mitigation and reactive power compensation.
- Inspection, testing and commissioning results: Submit.
  - Number of copies: 3.

Y67 Transient overvoltage surge suppression devices

To be read with Preliminaries/ General conditions

PRODUCTS

310 TRANSIENT OVERVOLTAGE SURGE SUPPRESSION DEVICES FOR MAINS POWER SUPPLIESFOR LOW VOLTAGE DISTRIBUTION SYSTEM - MAIN LV SWITCH BOARDS

- Manufacturer: Board's choice.
  - Product reference: Submit proposals.
- Standard: BS EN 61643-11 and IEEE C 62.41.
- Operating voltage and frequency (nominal): 400 V at 50 Hz.
- Operating voltage (maximum): 500 V.
- Phase arrangement: Three.
- Surge current (minimum) between any two conductors: 10 kA/350uS.
- Let-through voltage (maximum): Must not exceed the equipment transient design level (ETDL) supplied by the equipment manufacturer. Submit proposals.
- Current rating: Submit proposals.
- Thermal overload protection: Submit proposals.
- Mode of protection: Lines to earth, lines to neutral, neutral to earth.
- Protection status indicators: Full protection status
- Remote indication of status (including loss of phase/ supply): Required.
- Effect on mains power supplies during normal operation:
  - No corruption to normal mains supply.
  - No break or shutdown of mains supply.
  - No excessive earth leakage current.
- Enclosure: Within switchboard.

340 ENCLOSURES.FOR SEPARATELY MOUNTED DEVICES

- Manufacturer: Board's choice.
  - Product reference: Submit proposals.
- Ingress protection (minimum): Submit proposals.
- Material: Manufacturer's standard.
- Finish: Manufacturer's standard.
- Colour: Manufacturer's standard.

EXECUTION

620 INSTALLATION GENERALLY

- Standards:
  - To BS 7671;
  - DD CLC/TS 61643-12; and
  - DD CLC/TS 61643-22.
- Equipment: Provide electrical supplies to equipment requiring power.
- Fixings: Non-corroding and compatible with the environment where they are installed.

630 INSTALLING TRANSIENT OVERVOLTAGE SURGE SUPPRESSION DEVICES FOR MAINS POWER SUPPLIES

- Point of installation: Main switchboard
- Transient overvoltage suppression devices: Interconnect.
- Control cables between transient overvoltage suppression devices and BMS: Interconnect.
- Interconnecting cable:
  - Cable type: Submit proposals.
  - Cable size: submit proposals.
  - Cable length (maximum): 250 mm.
  - Cable installation: Tightly bind connecting leads together.
- Fuse protection: Provide fuse protection to transient overvoltage surge suppression devices.
- Isolation: Not required.

650 LABELLING

- Electrical equipment: Labels indicating the purpose of the equipment.
- Safety signs: Install where voltages above ELV exist.
- Voltage warning notices: Label equipment where voltage exceeds 230V.
- Format: To BS 5499-5. Include warnings of the voltage present.

APPENDIX A

LV CONTROL PRINCIPLES

B1. SUBSTATION LV SWITCHBOARDS: CONTROL REQUIREMENTS

B.1.1. INTRODUCTION

Each substation shall step down the 11kV 'A' & 'B' supplies for LV distribution, delivering power into 400V 'A' & 'B' systems via two main LV switchboards.

The Main LV Switchboards shall be arranged to provide both

- manual control of the incoming, bus-section & outgoing circuits and
- automatic control of the incoming, bus-section & selected outgoing circuits.

The automatic control scheme should achieve both change-over of incoming supplies under mains failure conditions and remote control by the ENMS for the purpose of load control. In outline, the control functions shall provide:

- changeover to the other supply if either one of the 'A' or 'B' 400V supplies is lost (to be effected by opening the incoming ACB on the failed supply and closing the bus-section switches),
- opening of both LV incomers and the bus-section switches in the event that both 'A' & 'B' supplies fail, in readiness for generator start-up, and closing of the incomers on signals from the Electrical Network Management System (ENMS) that the network is ready to have loads applied.
- progressive or grouped energisation or de-energisation of outgoing feeder circuits for situations where prioritisation of loads is required - typically for matching loads to available network capacity during generator start-up or under abnormal 11kV network conditions.

B.1.2. GENERAL

The LV switchboard and its control scheme shall include at least the following basic features:

- Electrical interlocking (hardwired on breaker auxiliary contacts, not via a PLC) to prevent paralleling of the incoming supplies,
- Functional interlocking and safety interlocks on the switchgear, these remaining active at all times (e.g. trip & close interlocks, anti-pumping arrangements on the closing circuit).
- A three position Master Control Selector Switch to allow choice of control as 'Local Manual', 'Remote ENMS (with auto change-over deactivated)' or 'Remote ENMS (with auto change-over active)' [though alternative control selector switch arrangements may be considered],
- Provision for remote control from, and signalling of status and alarm conditions to, a central control room by means of the ENMS,
- Arrangements such that protection tripping is not disabled by the position of the control selector switches.
- Electrically operated incomer and bus-section switches, and electrically operated feeder switches where the latter are necessary for load acceptance/load shedding under generator capacity controls. This will necessitate motor driven spring wind mechanisms on ACB's and motor driven MCCB's on feeder circuits - note these may need to be DC operated,

- It shall be possible to easily re-programme (or connect /reconnect) the individual circuit breaker controls for activation by any specific one of the load priority signals received from the ENMS,
- Local operator control shall, for ACB incomer and bus-section switches, be via electrical pushbutton action, with all interlocks and safety features active at all times. Any buttons or linkages which act directly on the mechanism shall be shrouded and padlocked to prevent inadvertent access. Manual control of motorised moulded case circuit breakers is not envisaged but, if provided, shall be limited to operation through electrical pushbuttons or switches.

B.1.3. AUTOMATIC CHANGE-OVER

The broad requirements are as follows:

- In the event of loss of one incoming 400V supply, the affected section of the board shall be switched over to the remaining healthy 400V supply by opening the circuit breaker incomer on the failed supply side and closing the bus section switch(es). The change-over shall not however be performed if the loss of supply involves a protection trip by the Incomer ACB serving that section of the board.
- The restoration control arrangement shall provide that upon return of both 400V supplies (both to mains, or both to generator provided there is no priority load constraint at the time) then the Switchboard shall require manual reinstatement if it is desired to return to any preferred configuration. This manual intervention may be at the switchboard (local) or via ENMS (remote) depending on the operational policy. (This is consistent with a policy of the operators having to pre-agree interruptions before reconfiguring supplies from a substation.)

More detailed requirements include:

- Change-over response shall be slugged sufficiently to avoid responding to transient events (including in situations where two incoming supplies are being energised but one is available fractionally before the other).
- Exact timing arrangements shall be agreed later, but it is envisaged that the Main LV switchboards will affect their auto changeovers within 5 seconds [0 – 10 second timer required].
- Reinstatement timing does not apply, on the basis that manual restoration is expected.
- The automatic changeover scheme shall be modified during periods when load pick-up is underway under ENMS control. During such times, the bus-section switches shall be held open and auto change-over blocked, but such blocking condition shall be removed after an enabling signal level has been reached by which both incomers should have been energised.
- The automatic changeover scheme shall be modified during periods when generators are being tested on hospital load. The modified behaviour shall allow switching for a mains supply to pick up loads if they were fed from a generator supply which has just failed, but shall block any changeover which might try to switch additional loads onto the generators under test.

Using the diagram below as a guide, the required operation of the incomers and bus-section switches shall be as tabulated in Table B1.

SUBSTATION MAIN LV SWITCHBOARDS

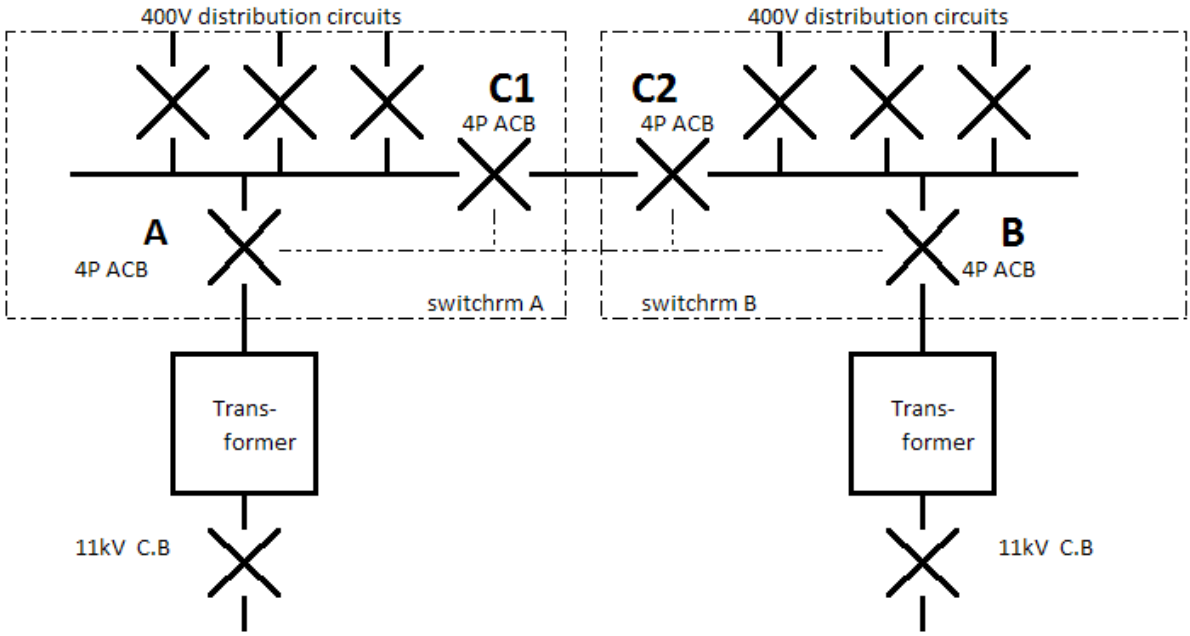

Refer to TABLE B1: Auto Change-over Behaviour (for conditions where ACB C2 is taken to be the preferred normally open point).

B.1.4. REQUIREMENTS FOR GENERATOR START-UP PERIODS & LOAD SHEDDING

To cater for the possibility that the multiple generators on site may need to pick up load in progressive or grouped stages, and to allow load shedding in the event that available generator or mains capacity is insufficient to match the prospective load, a scheme shall be developed to assign 'load priority' numbers to the various circuits and schedule the pick-up or shedding in favour of the more important loads. The control is expected to apply on the LV Switchboards (and downstream on various electrical & stand-alone plant loads (eg lifts, freezers and possibly some large system components and some kitchen equipment), and via the BMS system to control mechanical plant).

Background design information is provided in subsection B.1.6. Proposals for load priority numbers shall be tabulated in a schedule and shown for ease of reference on the schematics. The scheme assumes that the ENMS will signal to each of the LV Switchboards a number of signals against which the LV Switchboard controls will close or open individual circuit breakers on their outgoing feeders. The LV board shall determine from the combination of signals it receives the nature of the supply, and shall respond accordingly. The scheme further requires that the ENMS and the BMS will be capable of communicating so that mechanical loads can be managed through the BMS system.

A few ‘Condition’ signals will be transmitted to the LV Switchboard by the ENMS to indicate whether the supplies at the 400V incomers are derived from mains or generator, and whether generators on either side are being tested. Signals are expected for these functions, as listed below, but it should be noted that the final signal functions will be determined during detailed design by the ENMS specialist working from the ENMS specification.

- MV incomer A available
- MV incomer B available
- MV incomer A open/ closed
- MV incomer B open/ closed
- Mains Active, Supply A (‘A’ connected to Mains)
- Mains Active, Supply B (‘B’ connected to Mains)
- Generator Active, Supply A (‘A’ connected to Generator)
- Generator Active, Supply B (‘B’ connected to Generator)
- Generators on Test, Supply A
- Generators on Test, Supply B

A number of ‘Enabling’ signals shall be transmitted by the ENMS to give load priority enabling signals.

The scheme will require the assignment of priorities to groups of load across the site (life safety systems, departmental loads, imaging equipment, etc.).

B.1.5. INTERFACE FOR ENMS CONTROL

The LV switchboard shall include facilities as described in the ENMS specification, such that remote control may be implemented and remote detection made of switch status and alarm conditions.

A three position master control selector switch on the board shall provide an overall means of limiting control to one station at a time. This master switch shall provide for selection of control to one of the following:

Manual (Local)
ENMS only
ENMS and Auto Change-Over

Further 3-position control selector switches shall be located on individual ACB or MCCB compartments to block remote or automatic operation of the individual circuit device if an operator at the board selects the control mode for that circuit to ‘Manual’ or ‘off’.
Control switch positions shall be labelled:

Manual (Local)
Off
Auto/ENMS

Unless otherwise agreed, the signals to and from the ENMS shall be provided by means of volt-free contacts, and the LV switchboards shall incorporate isolating terminals (sliding link style) for connections to/from all remote control/signalling contacts.

Unless defined elsewhere, or unless additional signals need be transmitted to suit the ENMS design, the table overleaf shall be taken as showing the requirements for remote control and indication.

Main LV Switchboards & Related Equipment - Interface Requirements to ENMS and BMS Symbols: • To be transmitted via ENMS ○ To be linked to BMS * To be handled by either ENMS (preferred) or BMS. (Board/specialist to submit proposals)		Main LV Switchboards					Related Equipment		
	Signal Description	General	Incomers	Bus-Section(s)	Outgoing feeder circuit (controlled)	Outgoing feeder circuit (uncontrolled)	Power Factor Correction Banks	Harmonic Compensation (Future)	Battery Chargers & DC System
Input signals	Mains Active on Supply 'A'	•							
	Mains Active on Supply 'B'	•							
	Generators Active on Supply 'A' (1)	•							
	Generators Active on Supply 'B' (1)	•							
	Generators on Test, feeding 'A' side of board (1)	•							
	Generators on Test, feeding 'B' side of board (1)	•							
	(Multiple) Enable Load Connection, priority	•							
Input signals (Commands)	Switch circuit breaker to 'Off'		•	•	•				
	Switch circuit breaker to 'On'		•	•	•				
	Block PF correction during generator						•		
Output signals (status)	Control selected off ENMS	•							
	Control selected off automatic change-over	•							
	Auto Change-over scheme set for auto switching on restoration of failed supply.	•							
	Circuit Breaker is open (off)		•	•	•	•			
	Circuit breaker is closed (on)		•	•	•	•			
	Circuit Breaker racked out/unavailable (2)		•	•	•				
	Circuit breaker control selected off		•	•	•				
	MCCB motor mechanism out of service/off				•				
	Equipment selected off Automatic control						*	*	
	Equipment unavailable or operation inhibited						*	*	

Output signals (alarms)	EPO operated	*							
	Controls alarm (e.g. supply fail, PLC watchdog)	*							
	Incoming supply out-of-limits/failed		*						
	Circuit breaker tripped		*	*	*	*			
	Circuit breaker Trip Supply Failed		*	*	*				
	Springs discharged or auxiliary supplies failed		*	*	*				
	Common/grouped Alarm					*	*	*	*
Outputs (measureands)	kWh signals for metering – on circuits indicated on drawings or to satisfy the metering strategy (impulsing or otherwise to suit BMS)		•		•	•			
	Amps		•	•	•	•	•		
	Operations Count		•	•	•	•			
	kVAr compensation						•		
	Harmonic content (or total harmonic distortion)		•						

Notes:
(1) If these signals cannot be used to initiate blockage of Power Factor control when generators are running, then a separate input signal shall be transmitted via the ENMS.
(2) Term 'racked out' applies specifically to ACBs.

B.1.6. SUPPLEMENTARY DESIGN INFORMATION ON ENMS CONTROL

The control is envisaged as:-

- limiting the application of load during generator start-up (constrained by generator load acceptance limits) in three steps of 46.6%, 44.4% & 9% the combined rating of synchronised generator sets,
- being programmed to switch suitably sized blocks of load for any number of generators between (minimum) and 3 (total installed),
- Switching load blocks in a way which serves the above and always energises or keeps energised the higher priority loads (see the table at the end of this sub-clause),
- Being based primarily on the following concepts:
  - automatic change-overs to be effected at the various substation main LV switchboards,
  - motorised breakers at the main LV switchboards to connect or disconnect downstream loads during generator start-up or incidents on the 11kV network,
  - manually operated sub-panel switchboards (with 2-out-of-3 Ronis key interlocking),
  - ENMS control applied directly to lifts and various other loads, to supplement load control achievable at main LV switchboards,
  - BMS control of mechanical plant, again to supplement other load controls, and in order that motorised breakers can be avoided or minimised at sub-panels.
- Being cabled & connected so the ENMS can enable/disable various loads as follows:-
  - In Regen Kitchens, part of the catering load can be contactor controlled (energised & held on via a contactor, dropping off on loss

of supply or on ENMS disable signal and being re-energised by means of local reset button operable only if an ENMS enable signal is present),

- Lifts, via signal input to the respective controller
- Some large system components, via signal input to the control panel
- Kitchen freezer/refrigeration plants, via signal input to the control panel
- Restaurant main equipment akin to Regen Kitchens above
- Imaging Equipment: Automatic change-overs at each imaging switchpanel or individual imaging equipment (as depicted on schematics) for selection between 'A' & 'B' supplies. Load shed control & supply restoration would be applied at motorised source breakers (upstream, at the main LV switchboards), but ENMS signal to be brought to the imaging board/equipment to serve as permissive signal for the intended managed restart of the imaging suites.

The scheme shall support a feature of the ENMS which should permit:

- Initially, electrical loads to be switched against a 'list' of priority number allocations (diversified demands as estimated to be within the available generator capacity for the number of sets on-line & synchronised)
- After the complete start-up cycle and allowing a stabilising period for plant pick-up, and by reference to the margin between calculated generator capacity and measured generator load, electrical loads to be switched to more closely match the available generator capacity, retaining (where conditions permit) a spare set (i.e. N+1 operation). The envisaged ENMS behaviour would be to call for the next priority level loads if the capacity margin so permitted, or switch out one or more priority levels if the margin were negative. i.e. to 'step-up' or 'step-down' the priority levels.

Based on the assessed size/number of priority groups which must be provided (for combining into the multitude of possible switching steps related to 3-stage load application on any number of operable generators between 1 & 3), the table below indicates the envisaged switching blocks depending on the number of generator sets which start. The priority numbers are tabulated in the Load Priority Schedule and marked on the schematics against the individual electrical loads.

Number of 2MW Generators available	Load Pick-Up (Energising Load Group Priority Numbers as listed)			
	1st Step – [est 15 seconds]. (Simultaneous or rapid sequential application of first 46.6%)	2nd Step. (Simultaneous or rapid sequential application of next 44.4%)	3rd Step. (Simultaneous or rapid sequential application of remaining 9%)	Net loads groups supported without redundancy after generator run-up
One	P1	P2 to P4	P5, P6	P1 to P6
Two	P1 to P2	P3 to P8	P9, P10	P1 to P10
Three	P1 to P3	P4 to P9	P10	P1 to P10

P1-P10 Stage shown for information actual quantity subject to detail design.

B2. SUB-MAIN LV SWITCHBOARDS: CONTROL REQUIREMENTS

B.2.1. INTRODUCTION

Each Sub-Main Switchboard, described hereafter as a panelboard, receives two 400V supplies ('A' & 'B' supplies from the respective main LV Switchboard) and further distributes the electrical power (maintaining the dual 'A' & 'B' supply arrangement) to a number of distribution boards in the various user departments. The distribution boards are generally arranged with lighting and small-power circuits interleaved within the User departments to minimise the inconvenience of a power supply failure.

The panelboards shall be arranged to provide manual control of the incoming, bus-section & outgoing circuits. Neither automatic change-over of the incomers, nor automatic control of any outgoing circuits is required.

B.2.2. GENERAL

The Panelboard shall include at least the following basic features:

- Mechanical interlocking (Ronis or Castell keys, or other mechanical means if agreed) to prevent paralleling of the incoming supplies.
- Signalling of status and alarm conditions to, a central control room by means of the ENMS, but no need for remote control.

B.2.3. AUTOMATIC CHANGE-OVER

Automatic change-over is not required as automatic change over is a db level.

B.2.4. REQUIREMENTS FOR GENERATOR START-UP PERIODS & LOAD SHEDDING

Even during periods of generator start-up, or if load shedding is required during periods when the available generator capacity is insufficient to match the prospective load, no automatic control at the Sub-Main LV Boards (Panelboards) is required. Panelboards will therefore be energised & de-energised from upstream as complete entities, or the load control will be effected downstream by ENMS signal direct to lift controllers, plant control panels or contactors etc.

B.2.5. INTERFACE FOR ENMS CONTROL

The Panelboard shall include facilities as described in the ENMS specification, such that remote detection is made of switch status and alarm conditions.

Unless otherwise agreed, the signals to the ENMS shall be provided by means of volt-free contacts, and the panelboards shall incorporate isolating terminals (sliding link style) for connections to/from all remote control/signalling contacts.

Unless defined elsewhere, or unless additional signals need be transmitted to suit the ENMS design, the table overleaf shall be taken as showing the requirements for remote alarm and indication.

Sub-Main LV Switchboards (Panelboards) - Interface Requirements to ENMS and BMS

Symbols:
- • To be transmitted via ENMS
- ○ To be linked to BMS
- ∗ To be handled by either ENMS (preferred) or BMS. (Board to submit proposals.)

	Signal Description	General	Incomers	Bus-Section	Outgoing feeder circuit
Input signals					
Input signals (Commands)					
Output signals (status)					
	Circuit Breaker is open (off)		•	•	•
	Circuit breaker is closed (on)		•	•	•
	Circuit Breaker unavailable		•	•	
Output signals (alarms)					
	Incoming supply out-of-limits/failed		∗		
	Circuit breaker tripped		∗	∗	∗
	Common/grouped Alarm (if not covered above)		∗	∗	∗
Outputs (measureands)	kWh signals for metering – on circuits indicated on drawings or to satisfy the metering strategy (impulsing or otherwise to suit BMS)		•		•
	Amps		•	•	•

Specification Check / Revision Sheet

Project	**RHSC and DCN Edinburgh Hospitals**	Project Number	**G1547**
Service (s)	**Mechanical & Electrical**	Sheet	**WW AP.1.2.21 JB G1547**
Performance Specification Title	**Electrical Inspection and Testing**	Date	**August 2014**
Prepared By	**JB**	Checked By	**PM**

Revision Ref.	Date of Revision	Page N$^{o(s).}$	Revision Details	Checked By
FT	December 2013	All	Final Tender	PM
FC	July 2014	All	Update for Financial Close	JB
FC	August 2014	All	Comments Incorporated	JB

RHSC and DCN EDINBURGH
ELECTRICAL INSPECTION AND TESTING

CONTENTS

1.0	**GENERAL INTRODUCTION**
2.0	**SCOPE**
3.0	**APPLICABLE STANDARDS**
4.0	**DESIGN CRITERIA**
5.0	**LIAISON**
6.0	**SYSTEMS**
6.1	**ELECTRICAL INSPECTION AND TESTING**

MATERIALS AND WORKMANSHIP CLAUSES

V39	**Electrical Inspection and Testing**

1.0 GENERAL INTRODUCTION

Purpose of Document

The manufacture, supply, installation, wiring, connecting, setting to work and commissioning of the works described in this document.

This specification relates to the Low Voltage Distribution system serving the RHSC-DCN Building and the associated Energy Centre

This specification shall be read in conjunction with all other mechanical and electrical engineering services specifications and the Architectural drawings.

Description of Project

The new facility shall re-provide services from the Royal Hospital for Sick Children, Child and Adolescent Mental Health Service and the Department of Clinical Neurosciences in a single building adjoining the Royal Infirmary of Edinburgh at Little France.

The DCN part of the Facilities will have a physical link with the existing RIE Facilities specifically with the critical care unit.

The building is generally constructed from reinforced concrete.

The basement houses FM support facilities and the main building services heat distribution centres and electrical plant rooms.

Ventilation plantrooms are generally located at roof level and level 2.

A central Energy Centre shall be provided to the South of the hospital housing heating, CHP, standby generation, fuel storage and utility incomers.

2.0 SCOPE

The scope of work covered by this specification shall include, but not be limited to the following:-

- Electrical inspection
- Electrical testing
- Test certificates

3.0 APPLICABLE STANDARDS

All elements of the works shall be designed in accordance with the requirements of:-

- current legislation:
- SHTM 06-01 Chapter 17;
- Part 6 of the IEE Wiring Regulations; (BS. 7671);
- Annex to MEIGaN 'Healthcare Interpretation of IEE Guidance Note 7...' the initial verification tests specified in section 2.24 'Verification';
- MEIGaN V2.0 Chapter 11; and
- industry standards referred to in the materials & workmanship section.

4.0 DESIGN CRITERIA

Electricity Supply Characteristics

LV power characteristics: 400/230 V, 3-phase, 50 Hz, 230 V, 1-phase, 50 Hz.

5.0 LIAISON

Project Co. shall include for liaison with:-

Health and Safety Professionals. As well as the Health and Safety requirements of this specification, Project Co. shall include for close liaison with Health and Safety professionals including the Hospital's Health and Safety Advisors and the CDM Co-ordinator and shall comply with the CDM Regulations and all Health and Safety regulations.

The Board. Project Co. shall liaise with the Board through whom all communications must flow. Drawings and other documentation will be available via the Board. Project Co. shall include for liaison with members of the Board's team with an interest in the planning and administration of the Electrical Inspection and Testing.

The Hospital. Project Co. shall include for liaison in conjunction with the Board with members of the Hospital's team with an interest in the planning and administration of the Electrical Inspection and Testing.

6.0 SYSTEMS

6.1 Electrical Inspection and Testing

This document shall be read in conjunction with all mechanical and electrical specifications for the Sick Children, Child and Adolescent Mental Health Services.

Testing and verification in all areas shall be undertaken in accordance with Chapter 17 and Appendix 2 (Sample Test & Record Sheets) of SHTM 06-01.

In areas covered by the requirements of the Annex to MEIGaN 'Healthcare Interpretation of IEE Guidance Note 7...' the initial verification tests specified in section 2.24 'Verification' shall be carried out and recorded prior to commissioning. Testing and verification in these areas shall also be carried out in accordance with chapter 11 of MEIGaN V2.0.

V39 Electrical inspection and testing

To be read with Preliminaries/ General Conditions.

COMPLETION

910 ELECTRICAL INSPECTION AND TESTING TYPE
- Type: Initial verification.

915 ELECTRICAL TEST ENGINEER: General

- Approval: NICEIC/SELECT.
  - Evidence of approval: Submit.

915A ELECTRICAL TEST ENGINEER: MEIGaN
- Electrical test engineer: The inspection and testing of the installation shall be carried out by a suitably appointed 'Competent Person'. This person shall be assessed and appointed in writing by the 'Authorised Person (LV)' who shall verify that the proposed Competent Person possesses the necessary technical knowledge, skills and experience relevant to the nature of the installation to be tested and includes a knowledge of the requirements of the MEIGaN document. Independent MEIGaN specialist.
- Testing and verification shall be carried in accordance with BS 7671 'Requirements for electrical installations' including latest amendment.
- MEIGaN compliance to be determined against requirements of MEIGaN V2.0 chapter 11.

920 GENERAL
- Standards: To BS 7671 and in accordance with IEE Guidance note 3.
- Notice before commencing tests (minimum): 24 h.
- Installed equipment standards: Verify and confirm compliance with the relevant equipment standards.
- Electronic devices: Isolate to prevent damage during testing.
- Continuity of protective conductors:
  - Parallel earth paths: Isolate before testing.
  - Equipment: Continuity tester with short circuit current of at least 200 mA, and a no load d.c. or a.c. voltage between 4 V and 24 V.
- Insulation resistance (minimum):
  - SELV and PELV circuits: 1 megohm.
  - Other circuits less than or equal to 500 V: 2 megohm.
  - Circuits less than or equal to 500 V: 2 megohm.
- External earth fault loop impedance: Direct measurement.
- Connection of test equipment to existing switchgear: Submit proposals.
  - Timing: in accordance with commissioning programme.
- Earth fault loop impedance:
  - Method: Direct measurement or Calculated from measurement of the sum of the resistance of the phase conductor and the resistance of the circuit protective conductor.
- Measurement locations: Origin, switchgear, fixed equipment and outlets, circuit extremities.
- Prospective fault current:
  - Method: Direct measurement.
  - Location: Origin, and at points where protective devices are required to operate under fault conditions.

- Phase sequence & rotation: Verify.
- Cable containment: Measure electrical continuity and insulating properties of containment. Submit results.

940 TEST EQUIPMENT CALIBRATION

- Test equipment calibration: UKAS approved.

950 INSPECTION AND TEST RESULTS

- Standard: To BS 7671.
- Certificates: Submit.
  - Number of copies: 2.
- Test equipment identity: Record on test certificates.
- Certificates of calibration: Submit for each test instrument.
- Operation and maintenance instructions, record drawings & test/commissioning certificates to be compatible with proposed document management system.

960 ELECTRICAL INSTALLATION CERTIFICATES

- Format: To BS 7671 appendix 6.
- Schedule of test results: Submit.
- Operation and maintenance instructions, record drawings & test/commissioning certificates to be compatible with the proposed document management system.

Specification Check / Revision Sheet

Project	**RHSC and DCN Edinburgh Hospitals**	Project Number	**G1547**
Service (s)	**Mechanical & Electrical**	Sheet	**WW AP.1.2.22 JB G1547**
Performance Specification Title	**Common Electrical Clauses**	Date	**August 2014**
Prepared By	**JB**	Checked By	**PM**

Revision Ref.	Date of Revision	Page N$^{o(s).}$	Revision Details	Checked By
FT	December 2013	All	Final Tender	PM
FC	July 2014	All	Update for Financial Close	JB
FC	August 2014	All	Comments Incorporated	JB

RHSC and DCN EDINBURGH
COMMON ELECTRICAL CLAUSES

CONTENTS

1.0 GENERAL INTRODUCTION

MATERIALS AND WORKMANSHIP CLAUSES

V32 Low Voltage Cabling

V80 Electrical Identification

Y60 Conduit, Trunking and Ducting

Y63 Cable Supports

Y65 Electrical Accessories

1.0 GENERAL INTRODUCTION

Purpose of Document

The manufacture, supply, installation, wiring, connecting, setting to work and commissioning of the works described in this document.

This specification relates to the Low Voltage Distribution system serving the RHSC-DCN Building and the associated Energy Centre

This specification shall be read in conjunction with all other mechanical and electrical engineering services specifications and the Architectural drawings.

1.1 Description of Project

The new facility shall re-provide services from the Royal Hospital for Sick Children, Child and Adolescent Mental Health Service and the Department of Clinical Neurosciences in a single building adjoining the Royal Infirmary of Edinburgh at Little France.

The DCN part of the Facilities will have a physical link with the existing RIE Facilities specifically with the critical care unit.

The building is generally constructed from reinforced concrete.

The basement houses FM support facilities and the main building services heat distribution centres and electrical plant rooms.

Ventilation plantrooms are generally located at roof level and level 2.

A central Energy Centre shall be provided to the South of the hospital housing heating, CHP, standby generation, fuel storage and utility incomers.

1.2 Life Expectancy & Life Cycle Costing

The building services components shall be designed with materials, components and techniques that are readily available, reliable, sustainable and easily maintainable in use. supports buildings constructed of proven technology components, with high life expectancy, leading to minimum cost in use. Equipment shall be selected and installed match or exceed the indicative life of building services components as listed in CIBSE Guide M Appendix 13.A1.

Project Co. shall demonstrate that the theoretical design life proposed for any element will be achieved

Materials and components forming part of the Works, which require maintenance and replacement within the life of the Works, shall be selected, located and fixed in such a way as to minimise future inconvenience, disruptions and to avoid temporary closure of the Works.

Project Co. shall ensure that all plant and systems are selected and configured to provide high quality, efficient, resilient, modular flexible and maintainable Building Services solution.

1.3 Action following mains failure/generator test conditions

All low current systems to be self-rebooting following mains failure and generator test conditions.

1.4 Low current systems with battery back-up

All battery systems shall be easy to test and change.

1.5 Document Management System

Operation and maintenance instructions, record drawings & test/commissioning certificates to be compatible with Document Management System.

V32 Low voltage cabling

PRODUCTS

310 CABLES GENERALLY

- Standard: To BS 7671.
- Proposed selection of low voltage cables: Submit drawings, technical information, calculations and manufacturer's literature. Submit British Approvals Service for Cables (BASEC), and where appropriate Loss Prevention Certification Board (LPCB), certification for ALL cables.
- Conductor sizes (minimum):
  - Sub main cables: 16 mm².
  - Lighting final circuits (including CPC): 2.5 mm².
  - Power final circuits (including CPC): 4 mm².
  - Spare capacity (percentage of current carrying capacity): 25%.
- Cable sizes as per cable schedules and distribution board schedules

315 CABLES, CORDS AND CONDUCTORS IDENTIFICATION

- Identification: Throughout cable length.
- Colour identification of cores: To BS 7671.
- Phase rotation: Identify with the coding L1, L2 and L3.

330 FLEXIBLE CORDS

- Standard: To BS 6500.
- Third party certification: British Approvals Service for Cables (BASEC) certified.
- Manufacturer: Board's choice.
  - Product reference: Board's choice.
- Light duty PVC insulated and sheathed flexible cords (LD PVC/ PVC cord, H03VV-F):
  - Construction: To table 26.
  - Sheath colour: Board's choice.
- Ordinary duty PVC insulated and sheathed flexible cords (PVC/ PVC cord, H05VV-F):
  - Construction: To table 27.
  - Sheath colour: Board's choice.
- Ordinary duty 90ºC PVC insulated and sheathed flexible cords (HR PVC/ PVC cord, H05V2V2-F):
  - Construction: To table 29.
  - Sheath colour: Board's choice.

340 INDUSTRIAL FLEXIBLE CORDS

- Standard: To BS 7919.
- Third party certification: British Approvals Service for Cables (BASEC) certified.
- Manufacturer: Board's choice.
  - Product reference: Board's choice.
- Heavy duty, heat resisting EPR insulated and sheathed flexible cords (HD HR rubber cord, H07BB-F):
  - Construction: To table 12.

350 PVC INSULATED CABLES FOR SWITCHGEAR AND CONTROL GEAR

- Standard: To BS 6231.
- Third party certification: British Approvals Service for Cables (BASEC) certified.
- Manufacturer: Board's choice.
  - Product reference: Board's choice.
- Single core type CK flexible heat resisting cables (single core tri-rated):
  - Construction: To table 9.

360 SINGLE-CORE HEAT RESISTING INSULATING CABLES

- Standard: To BS 6007.
- Third party certification: British Approvals Service for Cables (BASEC) certified.
- Manufacturer: Board's choice.
  - Product reference: Board's choice.
- Heat resisting rubber insulated cable (HR rubber singles, H07G-U):
  - Construction: To table 3.

370 THERMOSETTING INSULATED CABLES Small power & lighting circuits and earth conductors

- Standard: To BS 7211.
- Third party certification: British Approvals Service for Cables (BASEC) certified.
- Manufacturer: Board's choice.
  - Product reference: Board's choice.
- Rigid thermosetting insulated single core cables (LSZH singles, H07Z):
  - Construction: To table 3a.
- Thermosetting insulated and sheathed single core cables (LSZH/ LSZH singles):
  - Construction: To table 5.
- Thermosetting insulated and sheathed cables with circuit protective conductor (LSZH/ LSZH with CPC):
  - Construction: To table 7.

380 THERMOSETTING INSULATED AND PVC SHEATHED CABLES (XLPE/ PVC SINGLES) FOR BURIED EARTH CONDUCTORS

- Standard: To BS 7889.
- Third party certification: British Approvals Service for Cables (BASEC) certified .
- Manufacturer: Submit proposals .
  - Product reference: Submit proposals .
- Conductors: Copper.

393A THERMOSETTING INSULATED AND LSZH SHEATHED ARMOURED CABLES General low voltage sub mains distribution (excluding 5 core cables).

- Type: Multi-core XLPE/ SWA/ LSZH and Single-core XLPE/ AWA/ LSZH .
- Standard: To BS 6724.
- Third party certification: British Approvals Service for Cables (BASEC) certified.
- Manufacturer: Board's choice.
  - Product reference: Board's choice.

- Insulation: Cross-linked polyethylene GP 8.
- Rated voltage: 600/ 1000 V.
- Conductors: Copper.

393B THERMOSETTING INSULATED AND LSZH SHEATHED ARMOURED CABLES General low voltage sub mains distribution (5 core cables).

- Type: Multi-core XLPE/ SWA/ LSZH.
- Standard: In accordance with the requirements of BS 6724.
- Third party certification: British Approvals Service for Cables (BASEC) certified.
- Manufacturer: Board's choice.
  - Product reference: Board's choice.
- Insulation: Cross-linked polyethylene GP 8.
- Rated voltage: 600/ 1000 V.
- Conductors: Copper.

420 FIRE RESISTANT, INSULATED AND SHEATHED CABLES. Fire detection and alarms cabling.

- Standard: To BS 7629-1.
  BS 8434-2 (enhanced 120 minutes)
  Enhanced grade cable as defined by BS 5839-1:2013.
  BS 8519:2010, 120 minute fire survival.
  SHTM 05-03 Part B
- Third party certification: British Approvals Service for Cables (BASEC) certified and LPCB.
- Manufacturer: As Prysmian Cables FP Plus.
  - Product reference: Submit proposals.

420A FIRE RESISTANT, INSULATED AND SHEATHED CABLES. Emergency lighting final circuits. Central battery system.

- Standard: To BS 7629-1.
  BS 5266-1.
  BS 8519:2010, 120 minute fire survival.
- Third party certification: British Approvals Service for Cables (BASEC) certified and LPCB.
- Manufacturer: As Prysmian Cables FP Plus.
  - Product reference: Submit proposals.

420B FIRE RESISTANT, INSULATED AND SHEATHED CABLES. Sprinkler pump power supplies.

- Standard: To BS EN 12845.
  BS 8519:2010, 120 minute fire survival.
- Third party certification: British Approvals Service for Cables (BASEC) certified and LPCB.
- Manufacturer: As Prysmian Cables FP600S.
  - Product reference: Submit proposals.

420C FIRE RESISTANT, INSULATED AND SHEATHED CABLES. Fire lifts and escape lifts.

- Standard: To BS 9999.
  BS 8519:2010, 120 minute r fire survival.
  SHTM 05-03 Part E
- Third party certification: British Approvals Service for Cables (BASEC) certified and LPCB.

- Manufacturer: As Prysmian Cables FP600S.
  - Product reference: Submit proposals.

420D FIRE RESISTANT, INSULATED AND SHEATHED CABLES. Motorised fire and smoke dampers, supply and control cabling

- Standard: To BS EN 12101
  BS 8519:2010, 120 minute fire survival.
- Third party certification: British Approvals Service for Cables (BASEC) certified and LPCB.
- Manufacturer: As Prysmian Cables FP Plus.
  - Product reference: Submit proposals.

420E FIRE RESISTANT, INSULATED AND SHEATHED CABLES. Power supplies to: powered smoke and heat exhaust ventilation, smoke fans, powered smoke shafts, pressurisation.

- Standard: To BS EN 12101
  BS 8519:2010, 120 minute fire survival.
- Third party certification: British Approvals Service for Cables (BASEC) certified and LPCB.
- Manufacturer: As Prysmian Cables FP600S.
  - Product reference: Submit proposals

420F FIRE RESISTANT, INSULATED AND SHEATHED CABLES. Activation and monitoring of: powered smoke and heat exhaust ventilation, smoke fans, powered smoke shafts, pressurisation.

- Standard: To BS EN 12101
  BS 8519:2010, 120 minute fire survival.
- Third party certification: British Approvals Service for Cables (BASEC) certified and LPCB.
- Manufacturer: As Prysmian Cables FP Plus.
  - Product reference: Submit proposals

420G FIRE RESISTANT, INSULATED AND SHEATHED CABLES. Powered sliding doors across escape routes.

- Standard: To BS 7273-4
  BS 8519:2010, 60 minute fire survival.
- Third party certification: British Approvals Service for Cables (BASEC) certified and LPCB.
- Manufacturer: As Prysmian Cables FP600S.
  - Product reference: Submit proposals

420H FIRE RESISTANT, INSULATED AND SHEATHED CABLES. Gaseous extinguishing systems.

- Standard: To BS EN 12094
  BS 8519:2010, 60 minute fire survival.
- Third party certification: British Approvals Service for Cables (BASEC) certified and LPCB.
- Manufacturer: As Prysmian Cables FP600S.
  - Product reference: Submit proposals

420J FIRE RESISTANT, INSULATED AND SHEATHED CABLES. Sprinkler pumps.

- Standard: To BS EN 12845
  BS 8519:2010, 120 minute fire survival.
- Third party certification: British Approvals Service for Cables (BASEC) certified and LPCB.
- Manufacturer: As Prysmian Cables FP600S.
  - Product reference: Submit proposals

420K FIRE RESISTANT, INSULATED AND SHEATHED CABLES. Suppression system monitoring.

- Standard: To BS EN 12845
  BS 8519:2010, 60 minute fire survival.
- Third party certification: British Approvals Service for Cables (BASEC) certified and LPCB.
- Manufacturer: As Prysmian Cables FP Plus.
  - Product reference: Submit proposals

420L FIRE RESISTANT, INSULATED AND SHEATHED CABLES. Sub mains from Central Battery System to local distribution boards.

- BS 5266-1.
  BS 8519:2010, 120 minute fire survival.
- Third party certification: British Approvals Service for Cables (BASEC) certified and LPCB.
- Manufacturer: As Prysmian Cables FP600S.
  - Product reference: Submit proposals.

440 SPLIT CONCENTRIC, INSULATED AND SHEATHED CABLES

- PVC insulated and sheathed: To BS 4553-1.
- Thermosetting insulated and PVC sheathed: To BS 4553-2.
- Thermosetting insulated and LSZH sheathed: To BS 4553-3.
- Third party certification: British Approvals Service for Cables (BASEC) certified.
- Manufacturer: Board's choice.
  - Product reference: Board's choice.
- Conductor: Copper.

460 INSULATING TAPE

- Standards: To BS EN 60454-1.

470 UNDERGROUND PLASTICS CABLE PROTECTION COVERS

- Manufacturer: Board's choice.
  - Product reference: Board's choice.
- Material: Polyethylene.
- Size:
  - Width: 150 mm.
  - Thickness: 18 mm.
- Jointing method: Peg.
- Identification: Laminate underground cable marker tape to top face.

480 CABLE ACCESSORIES

- Cold-pour resin compound: To BS 7933-1.
- Heat-shrink joints: To BS 7933-2.
- Glands: To BS EN 50262.
- Terminations for mineral insulated cables: To BS EN 60702-2.

EXECUTION

610 CABLE INSTALLATION GENERALLY

- Standard: To BS 7671.
- Timing: Do not start internal cabling until building enclosure provides permanently dry conditions.
- Preparation: Store cables above 5°C for 24 hours before installation.
- Installation temperature (minimum): 5°C.
- Cables: Install in one length.
- Cable pulling: Do not overstress. Prevent kinks and twisting of the cable.
  - Installation method: Submit proposals.
- Cables passing through walls: Sleeve with conduit or pipe duct. Bush at both ends.
- Cables surrounded or covered by insulation: Derate.
- Jointing: At equipment and terminal fittings only.

620 CABLE ROUTES

- Cables generally: Conceal wherever possible.
  - Concealed cable runs to wall accessories: Run vertically from the accessory.
  - Exposed cable runs: In plantrooms only.
- Distance from other services running parallel: 150 mm minimum.
  - Heating pipes: Position cables below.

630A CABLES CONCEALED IN WALLS AND PARTITIONS: EXTRA LOW VOLTAGE
Protection: Rigid pvc conduit.

630B CABLES CONCEALED IN WALLS AND PARTITIONS: LOW VOLTAGE
Protection: Rigid steel conduit, as section Y60.

640 CABLES IN VERTICAL TRUNKING AND DUCTS

- Supports: Pin racks or cleats at each floor level or at 5 m vertical centres, whichever is less.
- Heat barriers: Required.

660 CABLES ON CABLE SUPPORTS

- Position: Place cables side by side.
- Fastenings: Enable any cable to be individually removed.

670 SURFACE MOUNTED CABLES

- Fastening Minimum 25 mm between cable face and structure.
- Orientation: Dress cables flat, free from twists, kinks and strain.
- Terminating cables when not using glands: Take sheathing of cables into accessory boxes and equipment and protect against abrasion with grommets.

680 CABLES IN TRENCHES

- Base: Newly prepared bedding.
- Multiple cables in same trench: Set 150 mm apart.
  - Cable formation within trench: Space cables apart by a distance of half the cable diameter.

- Trefoil cable groups and protective conductors: Bind at 1 m intervals.
- Cables below roads and hardstandings: Install within duct and derate cable if longer than 10 m. Extend ducts 1 m each side of hard standing.
- Cable identification and protection: Underground plastics cable protection covers and underground cable marker tape.

710 CABLES IN DUCTS

- Cable installation from cable drums: Submit method statement.
- Single core trefoil cable groups and protective conductors: Install within a single duct and bind at 1 m intervals.

720 CABLES IN CONDUIT AND TRUNKING

- Cable installation: Install cables so that they are orderly and capable of being withdrawn.
- Single core wiring: Arrange using the loop-in method.
- Cables within trunking: Tie at 2 m intervals for cables of the same circuit reference. Label ties with circuit reference number at 10 m intervals.
- Cables in vertical conduit: Provide cable clamps in accessible conduit boxes at 10 m intervals.

740 INSTALLING ARMOURED CABLES

- Galvanized steel guards: Provide where cables are vulnerable to mechanical damage.
- Earthing: Bond armour to equipment and main earthing system.
- Connections to apparatus: Moisture proof, sealed glands and shrouds.

750 INSTALLING FLEXIBLE CORDS

- Cords: Grip securely at connections. Where cord grips do not form an integral part of the accessory or equipment, provide separate proprietary cord grips.

760 JOINTING AND TERMINATING ARMOURED CABLES

- Preparation: Cut cable ends immediately before jointing or terminating.
  - Cables left unconnected for more than 24 h: Seal to prevent moisture ingress.
- Cable stripping:
  - Length of exposed cores and conductors: Minimize. Leave no exposed conductor after termination.
  - Strands: Do not damage when stripping cable cores. Twist together. Do not reduce number. Secure at terminations.
- Joints and terminations: Use qualified cable jointers, using jointing materials, components and installation techniques recommended by the cable manufacturer and the jointing accessory manufacturer.
- Tooling certificate: Submit before installing connectors.
- Cable glands: Provide in accordance with BS 6121-5.
- Cold pour resin and heat shrink joints: Provide in accordance with BS 6910-2 or BS EN 50393.
- Plastics sheathed cables: Seal with proprietary shrink-on end caps.
- Bolted terminal connections to equipment and switchgear without integral cable clamping terminals: Compression or solder type lugs, of correct bore.
- Compression joints: Provide in accordance with BS 7609.
- Conductor labelling: Identify cable conductor cores at each end of cable and at joints.
- Unused cable cores: Connect to earth.

770 JOINTING AND TERMINATING ELASTOMER AND PLASTICS INSULATED CABLE

- Cable glands: Shroud.
- Core connections to equipment without integral clamping terminals: Compression lugs.

780 TERMINATING MINERAL INSULATED CABLES

- Standard: To BS EN 60702-2.
- Terminating copper sheaths: Earth to non-ferrous plate fixed to enclosure.
- Connections to vibrating equipment: Loop cables in a complete circle next to the point of connection.
- Connection to equipment and boxes: LSZH shrouded glands.
- Conductor cores: Identify at cable ends.
- Insulation resistance: Test at the time of termination and 24 h later.
  - Test report: Submit.

V80 Electrical identification

PRODUCTS

310 IDENTIFICATION AND NOTICES
- Standards: To BS 7671, HTM 06/02, HTM 06/03 BS 5499-1 and -5.

330 ELECTRICAL SHOCK TREATMENT SIGNS
- Type: Plastics encapsulated.
- Manufacturer: Board's choice.
  - Product reference: Board's choice.

FABRICATION

510A EQUIPMENT LABELS FOR DISTRIBUTION BOARDS
- Material: Face engraved rigid plastic laminate.
- Label size: Submit proposals.
- Colour:
  - Background: White.
  - Lettering: Black.
- Typography:
  - Font: Helvetica medium.
  - Size: submit samples.
- Content:
  Distribution Board reference
  Department served
  Incoming supply cable reference

510B EQUIPMENT LABELS Local isolation switches in plantrooms
- Material: Face engraved rigid plastic laminate.
- Label size: Submit proposals.
- Colour:
  - Background: White.
  - Lettering: Black.
- Typography:
  - Font: Helvetica medium.
  - Size: submit samples.
- Content:
  Reference of equipment served
  Incoming supply cable reference

510C EQUIPMENT LABELS Switch Boards
- Material: Face engraved rigid plastic laminate.
- Label size: Submit proposals.
- Colour:
  - Background: White.
  - Lettering: Black.
- Typography:
  - Font: Helvetica medium.
  - Size: submit samples.
- Content:
  Switchboard reference
  Incoming supply cable reference

510D EQUIPMENT LABELS Functional Units on Main and Sub Switch Boards

- Material: Face engraved rigid plastic laminate.
- Label size: Submit proposals.
- Colour:
  - Background: White.
  - Lettering: Black.
- Typography:
  - Font: Helvetica medium.
  - Size: submit samples.
- Content:
  Description, location and reference of equipment served
  Outgoing cable reference

510E EQUIPMENT LABELS Busbar trunking in risers and in plantrooms

- Material: Face engraved rigid plastic laminate.
- Label size: Submit proposals.
- Colour:
  - Background: White.
  - Lettering: Black.
- Typography:
  - Font: Helvetica medium.
  - Size: submit samples.
- Content:
  Bus bar reference at each floor where in riser and at 5m centres in plant rooms.
  End feed to be labelled with incoming supply cable reference.
  Tap offs to be labelled with description and reference of equipment served.

510F EQUIPMENT LABELS Local isolation switches and fused connection switches in occupied spaces - domestic type

- Material: Face engraved rigid plastic laminate.
- Label size: Submit proposals.
- Colour:
  - Background: White.
  - Lettering: Black.
- Typography:
  - Font: Helvetica medium.
  - Size: submit samples.
- Content:
  Circuit reference.
  Description of equipment served.

520 DIAGRAMS

- Material: Paper print, encapsulated.
- Format: Single line engineering drawings to BS EN 61082-1.
- Information to be included:
  - Supply characteristics.
  - Maximum demand.
  - Cable types and sizes.
  - Switchgear ratings.
  - Protective device types, ratings and function.
  - Prospective fault current values: At each item of switchgear.

- Earth fault loop impedance values: At each item of switchgear.
- Circuits containing equipment vulnerable to testing: Label.

- Mounting: Wall.

EXECUTION

610 LOCATION OF ELECTRICAL IDENTIFICATION AND NOTICES

- Standards: To BS 7671, BS 5499-1 and -5.

620 SAMPLES

- Labels: Submit samples showing material, style, colour, lettering, and fixing method for each label type.

630 ARRANGEMENT

- Location: Submit proposals.
- Fixing: Secure, plumb and level.
  - Type: Rivets.

650 IDENTIFYING SUB-MAIN CABLES

- Labels at both ends: Include circuit reference and cable size.
  - Marker type: Nylon clip-on cable markers.

660 FUNCTIONAL EARTHS

- Labels at cable ends: State the purpose of functional earth cables.
- Instructions for operation and maintenance: Encapsulated card at cable ends.

670 PROTECTIVE CONDUCTORS

- Labelling of busbar and bare conductors: In each compartment or unit and at each accessible position.

680 EQUIPMENT LABELLING AND VOLTAGE WARNING NOTICES

- Electrical equipment: Install labels indicating purpose.
- Safety signs: Install where voltages above ELV exist.
- Voltage warning notices: Label equipment when the voltage exceeds 230 V.
  - Format: To BS 5499-5 8.A.0044, include warnings of the voltage present.

690 CIRCUIT CHARTS

- Location: Distribution boards and consumer units.
- Format: Card within a reusable clear plastics envelope.
  - Size A4.
- Typed information: State outgoing circuit references, their device rating, cable type, cable size, circuit location and number of points served.
- Fixing: Fit to the inside of each unit with nylon hoop and loop self-adhesive pads.
- Switchgear outgoing ways: Label corresponding to the circuit chart.

700A LABELLING OF ELECTRICAL ACCESSORIES BY PROPRIETARY TAPE SYSTEM

- Fused connection units and isolators: Describe function and Identify circuit reference. Socket outlets: Identify circuit reference.
- Text colour: Black.

710 INSTALLING DIAGRAMS

- Location: At main switchgear and At section boards.
  - Installation: Wall mounted with cup & screw fixings.

720 INSTALLING PERIODIC INSPECTION NOTICES

- Location: At the incoming point of supply.
- Frequency of inspection: 3 year.

730 INSTALLING MAINTENANCE NOTICES

- Maintenance procedures: Install notices describing essential maintenance procedures and their frequency.
  - Location: At relevant equipment.

740 INSTALLING ELECTRIC SHOCK TREATMENT SIGNS

- Location: Rooms containing electrical switchgear.
  - Installation: Wall mounted with cup & screw fixings.

750 INSTALLING HAZARD SIGNS

- Location: At each item of switchgear.

Y60 Conduit, trunking and ducting

PRODUCTS

310 CONDUIT, TRUNKING AND DUCTING GENERALLY

- Standard: To BS 7671.
- Proposals: Submit drawings, technical information, calculations and manufacturer's literature.
- Conduit, trunking and ducting sizes not stated: Submit proposals and calculations.

320A RIGID CONDUIT PLASTIC

Final run outs from metalic trays for Extra Low Voltage wiring including, but not limited to, the following systems:
CCTV,
Intruder alarms,
Fire alarms,
Access Controls,
BMS wiring,
Public address,
Induction loops,
TV and radio distribution,
Nurse call,
Assistance alarms.
Structured cabling

- Standard: To BS EN 61386-21.
- Manufacturer: Board's choice.
  - Product reference: Board's choice.
- Material: PVC-U.

  Electrical properties: With electrical insulating properties.

320B RIGID CONDUIT: BLACK ENAMEL

For lighting and small power cabling generally

- Standard: To BS EN 61386-21.
- Manufacturer: Board's choice.
  - Product reference: Board's choice.
- Material: Steel.
- Mechanical properties:
  - Resistance to bending: Rigid.

  Electrical properties: With electrical continuity properties.
  Resistance to corrosion to BS EN 61386-1: Class 2.

320C RIGID CONDUIT: GALVANISED

For lighting and small power cabling in plant rooms and areas exposed to the weather

- Standard: To BS EN 61386-21.
- Manufacturer: Board's choice.
  - Product reference: Board's choice.
- Material: Steel.
- Mechanical properties:
  - Resistance to bending: Rigid.

  Electrical properties: With electrical continuity properties.
  Resistance to corrosion to BS EN 61386-1: Class 4.

380A CABLE TRUNKING AND CABLE DUCTING SYSTEMS FOR MAIN CABLE CONTAINMENT RUNS - GENERALLY SUSPENDED

- Standards: To BS EN 50085-1 and BS EN 50085-2-1 or to BS 4678-4.
- Manufacturer: Board's choice.
  - Product reference: Board's choice.
- Material: Steel.
- Construction: To include means of preventing contact between liquids and insulated conductors and live parts.
- Type: 2.
  Resistance to flame propagation: Required.
- Electrical properties: With electrical continuity characteristics.
  Protection against corrosive and polluting substances: Medium protection outside and inside.
- Access method: With tools.
- Screening: Not required.
  Sizes:
  - 38 x 38 mm;
  - 50 x 38 mm;
  - 50 x 50 mm;
  - 75 x 50 mm;
  - 75 x 75 mm;
  - 100 x 50 mm;
  - 100 x 75 mm;
  - 100 x 100 mm;
  - 150 x 100 mm;
  - 150 x 150 mm; and
  - 200 x 100 mm.
- Compartments:
  - 1;
  - 2; and
  - 3.
- Accessories and fittings: Factory made of the same material type and finish as trunking or ducting.

380B CABLE TRUNKING AND CABLE DUCTING SYSTEMS METAL WALL MOUNTED

TRUNKING (INCLUDING BEDHEAD & DADO TRUNKING) - IN SHTM 06-01 CLINICAL RISK CATEGORY 3, 4 AND 5 AREAS ONLY.

Refer to Small Power specification for description of Category 3, 4, 5 areas.

- SHTM 06-01 paragraph 14.35 recommends the use of metal trunking & conduit within category 4 & 5 areas. Paragraph 16.50 recommends the use of metal finished sockets in category 3 areas therefore metal trunking & conduit is required in category 3, 4 & 5 areas.
- Standards: To BS EN 50085-1 and BS EN 50085-2-1 or to BS 4678-4.
- Manufacturer: Board's choice.
  - Product reference: Board's choice.
- Material: Metallic.
- Construction: To include means of preventing contact between liquids and insulated conductors and live parts.
- Type: 2.
  Resistance to flame propagation: Required.

- Electrical properties: With electrical continuity characteristics.
  Access method: Without tools.
- Screening: Required.
- Sizes: approximately 210 x 60 mm.
- Compartments: 2.
- Accessories and fittings: Factory made of the same material type and finish as trunking or ducting.

380C CABLE TRUNKING AND CABLE DUCTING SYSTEMS PLASTIC WALL MOUNTED (EXCLUDING BEDHEAD TRUNKING) TRUNKING - IN SHTM 06-01 CLINICAL RISK CATEGORY 1 AND 2 AREAS ONLY.
Refer to Small Power specification for description of Category 1, 2 areas.

- SHTM 06-01 paragraph 14.35 recommends the use of metal trunking & conduit within category 4 & 5 areas. Paragraph 16.50 recommends the use of metal finished sockets in category 3 areas therefore it is permissible to use plastic trunking & conduit in category 1 & 2 areas.
- Standards: To BS EN 50085-1 and BS EN 50085-2-1 or to BS 4678-4.
- Manufacturer: Board's choice.
  - Product reference: Board's choice.
- Material: PVC-U.
- Construction: To include means of preventing contact between liquids and insulated conductors and live parts.
- Type: 2. Resistance to flame propagation: Required.
- Electrical properties: With electrical insulating characteristics. Access method: Without tools.
- Screening: Not required.
- Sizes: approximately 210 x 60 mm.
- Compartments: 2.
- Accessories and fittings: Factory made of the same material type and finish as trunking or ducting.

460 CONDUIT FITTINGS Generally

- Standards: To BS EN 61386-1 and to BS EN 61386-21, -22, or -23 as appropriate or to BS 4607-1.
- Manufacturer: Match conduit.
- Material: match conduit.
  - Finish: Match conduit.
- Conduit boxes: Fit covers of same material and finish as boxes. Include brass earthing terminals in PVC-U boxes.
- Plugs
  - For metallic boxes: Slotted brass.
  - For non metallic boxes: Hexagon screwed PVC-U.
- Locknuts:
  - For metallic boxes: Hexagonal steel.
  - For non metallic boxes: Hexagonal PVC-U.

475 INTUMESCENT LINEAR GAP SEALS

- Standard: To BS EN 1366-4.
- Manufacturer: Board's choice.
  - Product reference: Board's choice.

EXECUTION

610 INSTALLING CONDUIT, TRUNKING AND DUCTING

- Standards: To BS 7671 and in accordance with IET Guidance Note 1.
- Cable trunking or ducting: Provide when multiple conduits running in parallel exceed: 3.
- Preparation: Cut square.
  - Burrs and sharp edges: Make smooth.
- Cross-sectional area: Maintain throughout the conduit, trunking and ducting length.
- Arrangement: Position vertically and horizontally in line with equipment served, and parallel with building lines.
- Conduit in walls: Avoid concealed horizontal runs.
- Distance from other services running parallel (minimum):
  - Generally: 150 mm.
  - Above radiators: 1000 mm.
  - Steam services: 300 mm.
- Fire barriers: Provide to maintain integrity of fire compartments.
- Rewireable installations: Enable rewiring from accessible boxes or accessories only.
- Support: Independently fix and support conduit, trunking and ducting from building structure.
- Cleaning: Clean insides of conduit, trunking and ducting before installing cables.
- Cabling: Install when conduit, trunking and ducting enclosure is complete.
- Submittals: Submit manufacturer's technical information and drawings showing the proposed routes of conduit, trunking and ducting and the location of service outlets.

620 PROTECTION OF METALLIC CONDUIT, TRUNKING AND DUCTING

- Joints and ends: Remove grease, oil, dirt and rust before applying protective paint. Paint immediately following installation.
- Protective paint: Compatible with conduit, trunking and ducting finish.
  - Type: Match factory finish.

630 INSTALLING CONDUIT GENERALLY

- Fixing: Fix securely. Fix boxes independently of conduit.
- Changes of direction: Conduit boxes or bends site formed by machine. Do not use elbows, tees or inspection bends.
- Joints: Manufacturer's jointing fittings.
  - Number of joints: Minimize.
  - Lengths of conduit: Maximize.
  - Open ends: Plug.
  - At movement joints in structure: Manufactured expansion coupling. Install adaptable boxes on both sides of joint at a maximum distance of 300 mm.
- Connections to boxes, trunking, equipment and accessories: Screwed couplings with rubber bushes at open ends.

- Conduit boxes: Install flush with finished surfaces. Provide extension rings if required.
  - Fixing screws: Countersunk, or round-headed screws.
  - Number of fixings (minimum): For conduit boxes use 2. Larger fittings use 4.
  - Lids: Fasten with brass slot pan head screws.
- Rear outlet boxes: Locate where surface conduits pass through walls to external equipment.
- Draw-in boxes:
  - Spacing (maximum): 10 m.
  - Number of bends between draw-in boxes (maximum): 2.
  - Floors: Do not install draw-in boxes in floors.
- Suspended ceiling installations: Fasten outlet boxes to structure above ceiling.

640 INSTALLING RIGID METALLIC CONDUIT

- Fixings: Spacer bar saddle.
- Joints: Screwed.
- Threaded conduits: Tightly screw to ensure electrical continuity, with no thread showing.
- Conduit connections to boxes and items of equipment, other than those with threaded entries: Earthing coupling with male brass bush and protective conductor.

650 INSTALLING RIGID NON METALLIC CONDUIT

- Fixings: Spacer bar saddle.
- Joints: Threaded.
- Conduit connections to boxes and items of equipment: Threaded bushed entries.

660 INSTALLING PLIABLE AND FLEXIBLE CONDUIT

- Fixings: Spacer bar saddle.
- Joints: Threaded.
- Connections to trunking: Female adaptors and externally screwed brass bushes.
- Connections to equipment: Threaded bush.

670 INSTALLING CONDUIT IN CONCRETE

- Fastening: Fix securely to reinforcement. Fix boxes to formwork to prevent displacement of boxes.
- Concrete cover to conduit: 30 mm.
- Conduit in structural slabs: Submit drawings showing proposed route and location.

680 INSTALLING CONDUIT CONNECTIONS TO EQUIPMENT

- Surface mounted equipment:
  - Concealed conduit: Conceal the final connection.
  - Exposed conduit: Contain the final connection from the conduit box within flexible metal conduit.
- Equipment subject to vibration: Flexible metal conduit terminating in swivel connectors.
  - Length of conduit: Adequate for removal of equipment for maintenance.
- Connections to external equipment: galvanised conduit.

690 INSTALLING TRUNKING GENERALLY

- Supports/ mounting arrangement: Suspension rods and steel channels.
- Joints: Manufacturer's jointing fittings. Maintain rigidity of trunking across joint.
  - Number of joints: Minimize.
  - Lengths of trunking: Maximize.
  - Open ends: Blank using manufacturer's removable end caps.
  - Metal edging: Protect with PVC edging strip.
  - Electrical continuity: Maintain at each joint with a copper link fitted on the outside of the trunking.
- Connections to conduit, boxes, equipment and accessories: Screwed couplings, adaptors, connectors and glands, with rubber bushes at open ends.
- Connections to trunking covers: Minimize. Submit proposals for lid removal.
- Electrical continuity of covers: Electrically continuous with the trunking or provide protective conductors.
- Access: Provide space around trunking to permit access for installing and maintaining cables. Set out access with covers on a continuous face to allow cabling to be laid in throughout its entire length.
- Trunking passing through building fabric openings: Provide fixed trunking covers. Extend covers 50 mm from both sides of the opening.
- Cable retaining straps: Required except when trunking cover is on top.

720 DRAINAGE OF CONDUIT, TRUNKING AND DUCTING

- Drainage outlets: Locate at lowest points in conduit, trunking and ducting installed externally, and where condensation may occur.

770 SUPPORTS AND FIXINGS

- Suspension systems: Proprietary, comprising channel sections with return lips and accessories.
  - Finish and colour: Match conduit, trunking or ducting as appropriate.
- Supports and fixings: Select to prevent deterioration by electrolytic action.
- Supports and fixings in locations where moisture may occur: Corrosion resistant.

COMPLETION

910 CLEANING

- Electrical equipment: Clean immediately before handover.

920 INSPECTION AND TESTING

- Standard: To BS 7671.
- Electrical properties: Measure electrical continuity and insulating properties of conduit, trunking and ducting. Submit results.

930 DOCUMENTATION

- Drawings: Submit, showing the location of conduit, trunking, ducting and service outlets.
  - Dimensions: Include sufficient to locate components accurately.
- Operation and maintenance instructions, record drawings & test/commissioning certificates to be compatible with Zutec system

Y63 Cable supports

PRODUCTS

310 SELECTION OF CABLE SUPPORTS

- Standards: To BS 7671 and in accordance with IET Guidance Note 1.
- Proposals: Submit drawings, technical information, calculations and manufacturer's literature.
- Sizes not stated: Submit proposals and calculations.
- Spare capacity: 25%.

320 CABLE BASKETS for main wiring runs:
CCTV,
Intruder alarms,
Fire alarms,
Access Controls,
BMS wiring,
Public address,
Induction loops,
TV and radio distribution,
Nurse call,
Assistance alarms,
Structured cabling.

- Manufacturer: Board's choice.
  - Product reference: Board's choice.
- Material: Steel wire.
  - Diameter: Submit proposals.
- Coating material: Hot dip galvanized.
- Sizes:
  - Width: Submit proposals.
- Side height: Submit proposals.
- Features:
  - Segregation: Cable dividers.
  - Protective cover: Not required.

330A CABLE LADDERS For 11,000V cables

- Standard: To BS EN 61537.
- Manufacturer: Board's choice.
  - Product reference: Board's choice.
- Material: Steel.
- Resistance against flame propagation: Non flame propagating.
- Electrical properties:
  - Continuity characteristics: With electrical continuity.
- Conductivity characteristics: With electrical conductive system component.
- Coating material: Hot dip galvanized.
  Mechanical properties:
  - Cable ladder free base area: Board's choice.
  - Resistance to impact: Up to 50 J.
- Width:
  - 100 mm;
  - 200 mm;
  - 300 mm;
  - 400 mm;
  - 500 mm;

- 600 mm;
- 800 mm; and
- 1000 mm.

- Features:
  - Segregation: Not required.
  - Protective cover: Required.

340A CABLE TRAYS 400/230V Sub mains cabling

- Standard: To BS EN 61537.
- Manufacturer: Board's choice.
  - Product reference: Board's choice.
- Material: Steel.
- Resistance against flame propagation: Non flame propagating.
- Electrical properties:
  - Continuity characteristics: With electrical continuity.
  - Conductivity characteristics: With electrical conductive system component.
- Coating material: Hot dip galvanized.

  Mechanical properties:
  - Cable tray free base area: Board's choice.
  - Resistance to impact: Up to 50 J.
- Width:
  - 100 mm;
  - 200 mm;
  - 300 mm;
  - 400 mm;
  - 500 mm;
  - 600 mm;
  - 800 mm; and
  - 1000 mm.
- Features:
  - Flanged: Return flanged.
  - Segregation: Not required.
  - Protective cover: Not required.

350 CABLE SUPPORT COMPONENTS

- Components generally: Corrosion resistant where moisture may occur.
- Joints and expansion couplers: Use cable support manufacturer's products.

360 PROTECTIVE COVERS

- Type: Flanged.
  - Profile: Flat.

370A CABLE SUPPORT BRACKETS: SUBMAINS CABLES

- Standard: To BS 6946.
- Type: Board's choice.
- Finish: Match cable supports.

380A CABLE FASTENINGS

- Use and types:
  - Submain cables<95 mm²: Polyethylene one piece overlapping single fixing clamps.
  - Submain cables >95 mm²: Aluminium two piece twin fixing clamps.
  - Trefoil grouped submain cables: Aluminium trefoil single or twin fixing clamps.

  Manufacturer: Board's choice.
  - Product reference: Board's choice.
- Fire resistant power supply cables: cast iron cleats.

385 CABLE CLEATS

- Type:
  - Aluminium trefoil twin fixing clamps;
  - Aluminium two piece twin fixing clamps; and
  - LSZH two piece twin fixing clamps.
- Manufacturer: Board's choice.
  - Product reference: Board's choice.
- Fire resistant power supply cables: cast iron cleats.

390 CABLE TIES

- Type: Wrap around self locking releasable.
- Manufacturer: Board's choice.
  - Product reference: Board's choice.
  - Material: Nylon.

395A CABLE BANDS: FIRE ALARMS CABLING

- Type: Perforated metal bands.
  - Material: Copper.
  - Protective covering: LSZH.
- Manufacturer: Board's choice.
  - Product reference: Board's choice.

EXECUTION

610 INSTALLING CABLE SUPPORTS

- Standards: To BS 7671 and in accordance with IET Guidance Note 1.
- Preparation:
  - Burrs and sharp edges: Make smooth.
  - Cutting: Minimize. Cut square along an unperforated line. Make good edges.
  - Treatment of cut surface: Extend 25 mm beyond the cut. Match finish of cable supports.
- Width: Maintain throughout the cable support length.
- Access: Provide space around cable supports to permit access for installing and maintaining cables.
- Joints and expansion couplers: Locate between the bracket support and the quarter point.
  - Number of joints: Minimize.
  - Lengths of cable supports: Maximize.
  - Ends: Blank with end plates
- Holes in cable supports for the passage of cables: Grommet.
- Fire barriers: Provide where required to maintain fire performance of fabric.

- Support: Independently fix and support from building structure.
  - Clearance from building fabric (minimum): 20 mm.
  - Proposals: Submit.
- Components: Avoid contact between dissimilar metals.
- Routing of cable supports: Submit drawings showing the proposed routes.

620 MULTIPLE CABLE RUNS

- Cable supports: Required when cables running in parallel exceed: 3.

630 INSTALLING CABLE TRAY AND CABLE LADDER

- Changes of size and direction: Manufacturer's accessories of the same material type, pattern, finish and thickness as cable supports.
  - Site-formed bends: Not permitted.
  - Cable bends: Radiused.

640 INSTALLING CABLE BASKET

- Joints:
  - Cut: Adjacent cross basket wires.
  - Earth conductors: Connect across joints.
- Accessories: Form on site and connect with basket manufacturer's coupling components.

650 INSTALLING PROTECTIVE COVERS

- Location: Cables requiring mechanical protection.

660 CABLE INSTALLATION

- Cabling: Install when cable supports are complete.
- Preparation: Clear cable path of debris.
- Cable pulling: Submit method statement.
- Fastening: Secure cables, do not indent sheaths.
  - Spacing (maximum): 600 mm.

670 INSTALLING CABLE SUPPORTS ON ROOFS

- Location: Elevate above roof.
- Mounting: Load spreading supports.

680 INSTALLING BRACKETS FOR CABLE SUPPORTS

- Suspensions: Threaded rod fixed to channel with shake proof washers and hex nuts.
- Cable supports: Hold down with clamps and spring channel nuts.

COMPLETION

910 INSPECTION AND TESTING

- Standard: To BS 7671.
- Electrical properties: Measure electrical continuity and insulating properties of cable supports. Submit results.

Y65 Electrical accessories

PRODUCTS

310 PRODUCTS GENERALLY
- Standard: To BS 5733.
  - Switches: To BS EN 60669-1.

320 ELECTRICAL ACCESSORIES Occupied spaces
- Electrical accessories manufacturer: Board's choice.
  - Product reference: Board's choice.
- Plate:
  - Material: Plastics.
  - Finish: White.
  - Insert colour: Manufacturer's standard.
- Mounting: Recessed.
- Earthing terminal: Required.
- Cable termination:
  - Method: Screw.
  - Arrangement: Board's choice.

320A ELECTRICAL ACCESSORIES Plant rooms
- Electrical accessories manufacturer: Board's choice.
  - Product reference: Board's choice.
- Plate:
  - Material: Aluminium.
  - Finish: Manufacturer's standard.
  - Insert colour: Manufacturer's standard.
- Mounting: Surface.
- Earthing terminal: Required.
- Cable termination:
  - Method: Screw.
  - Arrangement: Board's choice.

340 LIGHT SWITCHES Occupied spaces.
- Manufacturer: Board's choice.
  - Product reference: Board's choice.
- Application: Internal.
- Ingress protection to BS EN 60529: IP 2X.
- Rating: 20 A.
- Actuating method: Standard rocker bar.
- Mounting: Flush.
- Poles: Double pole.

340A LIGHT SWITCHES Plant rooms.
- Manufacturer: Board's choice.
  - Product reference: Board's choice.
- Application: Internal.
- Ingress protection to BS EN 60529: IP 2X.
- Rating: 20 A.
- Actuating method: Standard rocker bar.
- Mounting: Surface.
- Poles: Double pole.

350 DIMMER SWITCHES AND CONTROLS Where required

- Standards: To BS EN 60669-2-1 and BS EN 55015.
- Manufacturer: Board's choice.
  - Product reference: Board's choice.
- Ingress protection to BS EN 60529: IP 2X.
- Mounting: Flush.
- Type: Board's choice.
- Rating: 1000 W.
- Suitable for the following loads: Fluorescent.
- Control: Momentary.

360 FUSED CONNECTION UNITS GENERALLY

- Standard: To BS 1363-4.
- Manufacturer: Board's choice.
  - Product reference: Board's choice.
- Ingress protection to BS EN 60529: IP 2X.
- Mounting: Flush.
- Control: Switched.
- Indicator lamp: Required.
- Fuse carrier access: Screw.
- Poles: Double pole.
- Flex outlet: Base entry.

370 CABLE OUTLETS GENERALLY

- Standard: To BS 5733.
- Manufacturer: Board's choice.
  - Product reference: Board's choice.
- Ingress protection to BS EN 60529: IP 2X.
- Mounting: Flush.
- Flex outlet: Base entry.

380A STANDARD SOCKET OUTLETS: SHTM06-01 CLINICAL RISK CATEGORY 3, 4 & 5
AREAS METAL FRONT PLATE

- Standard: To BS 1363-2.
- Manufacturer: Board's choice.
  - Product reference: Board's choice.
- Ingress protection to BS EN 60529: IP 2X.
- Mounting: Flush.
- Type: Twin.
- Control: Switched.
  - Switch position: Submit proposals.
  - Indicator lamp: Not required.
- Interlock: 3 pin equal pressure.
- Accessories:.

MATERIALS - METAL FRONT PLATE

380B STANDARD SOCKET OUTLETS: SHTM06-01 CLINICAL RISK CATEGORY 1 & 2 AREAS PLASTIC FRONT PLATE

- Standard: To BS 1363-2.
- Manufacturer: Board's choice.
  - Product reference: Board's choice.
- Ingress protection to BS EN 60529: IP 2X.
- Mounting: Flush.
- Type: Twin.
- Control: Switched.
  - Switch position: Submit proposals.
  - Indicator lamp: Not required.
- Interlock: 3 pin equal pressure.
- Accessories:.

MATERIALS - PLASTIC FRONT PLATE

380C STANDARD SOCKET OUTLETS: ISOLATED POWER SUPPLY IPS SOCKETS GENERALLY

- Standard: To BS 1363-2.
- Manufacturer: Board's choice.
  - Product reference: Board's choice.
- Ingress protection to BS EN 60529: IP 2X.
- Mounting: Flush.
- Type: Twin.
- Control: Switched - DOUBLE POLE.
  - Switch position: Submit proposals.
  - Indicator lamp: Not required.
- Interlock: 3 pin equal pressure.
- Accessories: Dual earth terminals

MATERIALS - METAL FRONT PLATE
COLOUR - BLUE
MEIGaN COMPLIANT CLEAN EARTH SOCKET
ENGRAVED AS MEIGaN REQUIREMENTS

400 INDUSTRIAL SOCKET OUTLETS Single phase - internally

- Standards: To BS EN 60309-1 and BS EN 60309-2.
- Manufacturer: Board's choice.
  - Product reference: Board's choice.
- Ingress protection to BS EN 60529: IP 44.
- Material: Polycarbonate.
- Voltage rating: 200-250 V a.c..
- Current rating: as drawn.
- Frequency rating: 50 60 Hz.
- Pin configuration: 2 pole and earth.
- Mounting: Surface angle mount.
- Controls: Integral switch with interlock.

400A INDUSTRIAL SOCKET OUTLETS Single phase - externally

- Standards: To BS EN 60309-1 and BS EN 60309-2.
- Manufacturer: Board's choice.
  - Product reference: Board's choice.
- Ingress protection to BS EN 60529: IP 67.
- Material: Polycarbonate.
- Voltage rating: 200-250 V a.c..

- Current rating: as drawn.
- Frequency rating: 50 60 Hz.
- Pin configuration: 2 pole and earth.
- Mounting: Surface angle mount.
- Controls: Integral switch with interlock.

400B INDUSTRIAL SOCKET OUTLETS Three phase - internally

- Standards: To BS EN 60309-1 and BS EN 60309-2.
- Manufacturer: Board's choice.
  - Product reference: Board's choice.
- Ingress protection to BS EN 60529: IP 44.
- Material: Polycarbonate.
- Voltage rating: 380-415 V a.c..
- Current rating: as drawn.
- Frequency rating: 50 60 Hz.
- Pin configuration: 3 pole, neutral and earth.
- Mounting: Surface angle mount.
- Controls: Integral switch with interlock.

400C INDUSTRIAL SOCKET OUTLETS Three phase - externally

- Standards: To BS EN 60309-1 and BS EN 60309-2.
- Manufacturer: Board's choice.
  - Product reference: Board's choice.
- Ingress protection to BS EN 60529: IP 67.
- Material: Polycarbonate.
- Voltage rating: 380-415 V a.c..
- Current rating: as drawn.
- Frequency rating: 50 60 Hz.
- Pin configuration: 3 pole, neutral and earth.
- Mounting: Surface angle mount.
- Controls: Integral switch with interlock.

405 INDUSTRIAL PLUGS GENERALLY

- Standards: To BS EN 60309-1 and BS EN 60309-2.
- Manufacturer: As electrical accessories manufacturer.
  - Product reference: Board's choice.
- Ingress protection to BS EN 60529: as socket.
- Material: Polycarbonate.
- Voltage rating: as socket.
- Current rating: as socket.
- Frequency rating: 50 60 Hz.
- Pin configuration: as socket.
- Number to be supplied: one per socket.

450 SHAVER SUPPLY UNITS GENERALLY

- Standard: To BS EN 61558-2-5.
- Manufacturer: Board's choice.
  - Product reference: Board's choice.
- Ingress protection to BS EN 60529: IP 41.
- Mounting: Flush.

- Output voltage: 115 V and 230 V.
- Rating: 20 V·A.
- Isolating transformer: Integral.

460 DOUBLE POLE SWITCHES GENERALLY in occupied spaces

- Manufacturer: Board's choice.
  - Product reference: Board's choice.
- Ingress protection to BS EN 60529: IP 2X.
- Mounting: Flush.
- Rating: as drawings.
- Indicator lamp: Not required.

460 UNSWITCHED DOUBLE POLE SWITCHES GENERALLY in occupied spaces

- Manufacturer: Board's choice.
  - Product reference: Board's choice.
- Ingress protection to BS EN 60529: IP 2X.
- Mounting: Flush.
- Rating: as drawings.
- Indicator lamp: Not required.

470 COOKER CONTROL UNITS GENERALLY

- Standard: To BS 4177.
- Manufacturer: Board's choice.
  - Product reference: Board's choice.
- Ingress protection to BS EN 60529: IP 2X.
- Mounting: Flush.
- Supply to cooker: as drawings.
- Switched socket outlet: Not required.
- Indicator lamp: Required.

480 COOKER CONNECTION UNITS

- Standard: To BS 5733.
- Manufacturer: Board's choice.
  - Product reference: Board's choice.
- Ingress protection to BS EN 60529: IP 2X.
- Mounting: Flush.
- Individual terminal block capacity (minimum): 10 mm² stranded cable.

500 CEILING LIGHT SWITCHES GENERALLY

- Standard: To BS EN 61058-2-1.
- Manufacturer: Board's choice.
  - Product reference: Board's choice.
- Ingress protection to BS EN 60529: IP 4X.
- Mounting: Surface.
- Rating: 10 A.
- Configuration: As drawings.
- Cord colour: White.

EXECUTION

610 INSTALLING ELECTRICAL ACCESSORIES

- Standard: To BS 7671.

620 ARRANGEMENT

- Locations: As drawings.
  - Coordinate with other wall or ceiling mounted equipment. Submit proposals.
- Positioning: Accurate and square to vertical and horizontal axes.
- Alignment: Align adjacent accessories on the same vertical or horizontal axis.
- Fixing: Secure, plumb and level.
- Mounting heights (finished floor level to underside of accessory):
  - Light switches: 1200 mm.
  - Single voltage shaver outlets: 1200 mm.
  - Shaver supply units: 1200 mm.
  - Socket outlets: 450 mm.
  - Fan isolators: Adjacent fan.
  - Cooker control units: 200 mm above worktop.
  - Cooker connection units: 600 mm.
- Separation distance between adjacent accessories: (minimum): 30 mm.

630 GRID SWITCH PLATES

- Spare modules: Provide blank inserts.

640 INSTALLING LIGHT SWITCHES

- Multigang switches: Connect so that there is a logical relationship with luminaire positions.
  - Unused switch spaces: Fit with blanks.
  - Segregation: Internally segregate each phase with phase barriers. Include warning plates.

COMPLETION

910 FINAL FIX

- Accessory faceplates (Grid accessories only): Fit after completion of building painting.

Specification Check / Revision Sheet

Project	**RHSC and DCN Edinburgh Hospitals**	Project Number	**G1547**
Service (s)	**Mechanical & Electrical**	Sheet	**WW AP.1.2.23 JB G1547**
Performance Specification Title	**MV Installations**	Date	**August 2014**
Prepared By	**JB**	Checked By	**PM**

Revision Ref.	Date of Revision	Page N$^{o(s).}$	Revision Details	Checked By
FT	December 2013	All	Final Tender	PM
FC	July 2014	All	Update for Financial Close	JB
FC	August 2014	All	Comments Incorporated	JB

RHSC and DCN EDINBURGH
MV INSTALLATIONS

CONTENTS

1.0	GENERAL INTRODUCTION
2.0	SCOPE
3.0	SPECIFIC EXCLUSIONS
4.0	APPLICABLE STANDARDS
5.0	DESIGN CRITERIA
6.0	LIAISON
7.0	SYSTEMS

MATERIALS AND WORKMANSHIP CLAUSES

V10	High voltage connection
V12	Generator systems
V20	High voltage distribution systems
V21	High voltage switchgear
V22	Fluid immersed transformers
V23	Dry-type transformers
V24	High voltage cabling

1.0 GENERAL INTRODUCTION

Purpose of Document

The manufacture, supply, installation, wiring, connecting, setting to work and commissioning of the works described in this document.

This specification relates to the Low Voltage Distribution system serving the RHSC-DCN Building and the associated Energy Centre.

This specification shall be read in conjunction with all other mechanical and electrical engineering services specifications and the Architectural drawings.

Description of Project

The new facility shall re-provide services from the Royal Hospital for Sick Children, Child and Adolescent Mental Health Service and the Department of Clinical Neurosciences in a single building adjoining the Royal Infirmary of Edinburgh at Little France.

The DCN part of the Facilities will have a physical link with the existing RIE Facilities specifically with the critical care unit.

The building is generally constructed from reinforced concrete.

The basement houses FM support facilities and the main building services heat distribution centres and electrical plant rooms.

Ventilation plantrooms are generally located at roof level and level 2.

A central energy centre to the South of the hospital houses heating, CHP, standby generation, fuel storage and utility incomers.

2.0 SCOPE

The scope of work covered by this specification shall include, but not be limited to the following:-

- Incoming Electrical Supplies and Main MV Switch Panels
- MV Site Distribution Systems
- MV Standby Generation
- MV Earthing Systems
- Electrical Network Management Systems

The foregoing summary is intended for the general guidance of the Board in the preparation of his Tender. Any omission from it shall not relieve him of his obligation to carry out the whole of the works herein described and/or indicated on the drawings

3.0 SPECIFIC EXCLUSIONS

Fire alarm systems, lightning protection systems and telecommunications systems requirements are generally covered in separate documentation.

4.0 APPLICABLE STANDARDS

All elements of the works shall be designed in accordance with the requirements of SHTM 06-01, IEE Wiring Regulations BS 7671 (17th Ed.), current legislation, regulations and industry standards unless otherwise stated.

5.0 DESIGN CRITERIA

Electricity Supply Characteristics

The site will be provided with two new 11000Volt 50Hz, three phase electrical supplies from SPEN's MV network. These individual electrical supplies will be derived from the outgoing terminals of SPEN's automatic change over arrangement which shall be located in the adjacent switch room.

Drawings

As part of the development of the design Project Co. shall prepare general arrangement drawings of the works to be provided. These shall be based on the Architect's base drawings and coordinated with other services and building elements. A proposed drawing list shall be submitted with the Tender.

6.0 LIAISON

Project Co. shall include for liaison with:-

SPEN. Project Co. shall include for liaison with SPEN for the design of the services in/for the 11kV sub-station building The systems to be provided in the main 11kV substation include primary and secondary lighting, small power systems, fire alarm systems and comms systems for which further details are contained in other specifications

Health and Safety Professionals. As well as the Health and Safety requirements of this specification, Project Co. shall include for close liaison with Health and Safety professionals including the Hospital's Health and Safety Advisors and the CDM Co-ordinator and shall comply with the CDM Regulations and all Health and Safety Regulations.

Project Co. shall include for liaison in conjunction with the Board with members of the Hospital's team with an interest in the planning and administration of the small power System.

Building Control. Project Co. shall liaise, with and adhere to, the requirements of the Building Control Officer.

Any other member of the Project and Board teams concerned with the planning and administration of small power installations.

7.0 SYSTEMS

7.1 Incoming Electrical Supplies

SPEN are providing two incoming electrical supplies each with a rating of 3MVA. These are to be arranged such that if either fails the other is capable of taking the complete building load.

The incoming MV electrical supplies will be terminated into the circuit breaker switch board which is designed to supply the electrical needs of the new development and includes an auto change over arrangement and two feeder breakers for the project which all need be monitored by the Electrical Network Management Systems (ENMS).

SPEN shall make volt free contacts available for status monitoring of the 4 devices which shall be run to a wall mounted interface demarcation box.

Project Co. shall liaise with SPEN examining their design drawings and proposals to verify the equipment being provided by SPEN is compatible with both the MV cables and the ENMS monitoring he is providing.

The RHSC-DCN supplies shall be terminated into the RHSC-DCN circuit breaker board which shall be designed to integrate with the generator circuit breaker board and provide supplies to the RHSC-DCN ring mains.

7.2 MV site distribution systems

Outline description

The MV systems will be required to safely distribute the outputs from the available incoming supplies, MV standby generators, to the distribution load centres indicated on the drawings. The systems shall be designed and installed to maximise the security of supply to each of the load centres.

The MV systems to be provided principally include MV switch panels, cables, ring main units, cast-resin transformers and generators all as indicated on the drawings WW-XX-XX-SC-530-001.

The outgoing circuits shall be interlaced between the four ring main units with the open point loaded in Sub-Station 2. The cabling for these circuits will be buried direct in soft landscapes and drawn into cable ducts and pits when under hard standings and either laid in cable trenches or cleated to cable ladder when installed within buildings.

The minimum normal depth for all buried MV cables will be 1000mm below finished ground level.

Details of the MV switchgear are contained on the drawings and in the NBS clauses accompanying this specification.

The MV ring main shall operate on an open circuit basis, effectively as two radial feeds, such that in the event of a single cable fault only one of the radial feeds is isolated by the MV circuit breaker. Each of the ring main units shall however be fitted with earth fault passage indicators to show the direction/location of the earth fault around the circuit.

Energy Centre and Site Distribution

Details of the site cable routes and the cable routes within the Energy Centre are indicated on the drawings accompanying this specification.

7.3 MV Standby Generation

General

The standby generation facilities to be provided principally include:-

- 3No 2000kW, 2500MVA, 50hz 11000V three phase, diesel engine powered generators.
- Monitoring and control equipment
- Control and switch gear
- Acoustic treatment of the generator rooms to ensure the specified noise levels are not exceeded.
- Engine exhaust systems
- Fuel storage and transfer systems

The systems shall be as noted on the drawings, as described in this specification and as described in all appropriate specifications prepared for the electrical engineering works.

Each of the individual standby generators shall be complete with a dedicated control panel as described hereinafter. These panels shall be located in the control room and shall be linked to an adjacent ENMS control panel.

Fuel Storage

Local storage and transfer systems shall be provided to give approximately 6 hours of full load run time for each generator.

The Individual generators shall each be provided with a local daily service fuel tank to hold a minimum of 3200 litres of fuel. The daily service tanks shall be provided with a minimum of a further 15% of overfill capacity into which the high level float switches shall be fitted.

The fuel transfer/pumping systems to this local tank from the bulk storage tanks are outlined in a separate specification. The daily services tank shall however be fitted with low and high level alarm switches and contacts for:-

- Tank ‘empty’ alarm output to the BEMS – set at 15% level.
- Tank ‘emptying’ float switch and contact to signal the re-filling pump to start and inlet valve to open. This shall also have an output to the BEMS – set at 25% level

- Tank ‘full’ float switch/contact and cut-out for shutting down the re-fill pump and closing the refill valve. This shall also have an output to signal to the BMS system – set at 100% level
- Tank ‘over full’ switch/contact to both close a second motorised valve and to give an over full alarm output the BMS – to be at 110% level.

The daily service tanks shall be fitted with a fuel dump control valve and pipe/line.

The daily service tanks to each generator engine hall shall be linked to a common fire wire system that in the event of a local fire shall cause:-

- The local fuel to be dumped back into the bulk storage on the ground floor.
- Close a free fall fire valve on each fuel pipe entering the engine hall
- Cause a fire alarm to be sounded

Fuel flow and return pipework will be provided from each generator to its daily service tank.

All fuel pipework, tanks and valves shall be compliant with the requirements noted in specification WW.A.P.1.2.17.

Where fuel pipework is to be installed at low level accross floors it shall be protected against mechanical damage and/or treated to ensure it does not form a tripping hazard. This shall be by installing it into a floor trench (subject to Structural Engineers approval), or installing it immediatly beneath the floor slab or providing a high visibility chamferred edged cover.

Required Noise Levels

The whole of the installation shall be acoustically treated to ensure the following sound pressure levels are not exceeded:-

- 3m from the Energy Centre - 62dB (A).
- 3m from the exhaust discharge – 62dB (A).
- Within the generator control rooms and MV switch rooms – 50 dB (A).

Combustion/Cooling Air and Sound Attenuation.

The acoustic treatment to be provided as part of the works shall include:-

- Acoustic air inlet and discharge weather louvres.
- Air inlet and discharge attenuators with automatically opening and closing dampers on the internal faces of the units.
- Acoustic lining of the generator hall walls and ceilings.
- Acoustic wall and doors, as required, between each pair of generators to reduce sound reverberation and thereby reduce the overall noise output.

The discharge air paths shall be sealed against the building fabric to prevent leakage back into the engine rooms and thereby assist with the prevention of overheating of individual generating sets or groups of generating sets.

Weather Louvres

Louvres shall be provided for the air inlet and discharge from each set (3 No).

The louvres shall be selected to form part of the overall acoustic treatment of the generator installations and shall prevent water ingress into the building under all operating conditions.

The inlet louvres shall be sized and fixed/sealed to the building fabric in such a way as to enable them to be removed and to enable individual inlet attenuators to be removed and replaced through their louvre openings.

The discharge louvres shall be sized and fixed/sealed to the building fabric in such a way as to enable them to be removed and to enable removal/ replacement of the discharge attenuators and the generator sets through their openings.

Each of the inlet and discharge louvres shall have a long lasting finish to a colour to be agreed with the Architects.

Each louvre shall be complete with a bird mesh grill.

Inlet and Discharge Attenuators.

Separate air inlet and discharge attenuators pairs shall be provided for each of the 3 No generators set being provided as part of the current works.

The attenuators shall be selected to form part of the overall acoustic treatment of the generator installations.

Attenuators shall be of the dissipative type and constructed of specially selected high quality materials. Outer casings shall be made of galvanised sheet steel.

Each unit shall constructed to prevent air leakage

Internal splitter units shall have aerodynamic leading and trailing edges to reduce pressure drop across them.

The acoustic infill shall be of inorganic high density bonded long stranded rock wool sufficient to obtain the specified acoustic performance and packed under compression to eliminate voids due to vibration and settling. Infill material shall insect, vermin and moisture proof.

The louvres shall be structurally designed to withstand the pressure drops across them under operating conditions.

Automatic multi-bladed dampers shall be provided on the inlet attenuators. The dampers shall be arranged to open on the start signal for the appropriate standby generator and to close once that engine has stopped operating.

Engine Exhausts

Each engine shall be complete with its own exhaust systems designed to safely discharge the exhaust gasses to atmosphere and to silence the noise output to acceptable levels.

Each engine being provided with both primary and secondary silencers that shall be fitted in series.

The primary silencers shall be of a multiple chamber reactive type designed for low frequency attenuation. The secondary exhaust silencers shall be straight through absorptive type for mid to high frequency attenuation.

Silencers shall be of welded steel construction. The acoustical infill shall be formed from inorganic high density bonded material capable of operating at the maximum service temperatures of 650 degrees celsius.

Exhaust pipe shall be constructed from high quality steel with welded joints.

The noise level 3 m from the exhaust discharge with 3 sets running, shall be no more than 62 dB (A).

The whole of the internal exhaust systems shall be complete with thermal insulation and stucco aluminium cladding to reduce the temperature of the accessible exhaust components to safe levels.

Vertical runs of discharging exhaust shall have drain pipes and drain valves.

7.4 Earthing Systems

The whole of the electrical systems shall be earthed and bonded to accord with the requirements of BS 7430, BS 7671 and Scottish Power Energy Networks (SPEN). The requirements for this are interpreted onto the drawings accompanying this specification.

Under mains supply conditions (Mains only and generators paralleling with the mains) the systems shall rely on SPEN's earth.

Under generator only conditions when all generators are operating in parallel the systems shall be earthed to one generator's neutral via the appropriate neutral earthing panel and its MV resistor.

The neutral earthing panels shall be equipped with a spare/paralleled circuit earth resister in a separate compartment such that one can be removed while the other is in use.

The neutral earthing shall be controlled by the Electrical Network Management System and the generator control panels

Two sets of earthing rods shall be provided to form a connection from the MV earth bars to the general mass of earth. These shall each comprise a minimum of 4 No parallel earth electrodes driven to depth of 4.8m and contained in concrete inspection chambers. The minimum resistance to earth of each set of earth electrodes is one Ohm. Where this is not achieved then either additional earth rods shall be installed or the installed units shall be driven deeper.

7.5 Electrical Network Management Systems

Generally

The new MV electrical systems will principally comprise two incoming supplies feeding into a distribution network whose principle equipment includes approximately 18 No MV circuit breakers, 4No transformers, 3No MV Generators, as well as outputs for the connection of generator testing load bank modules and the CHP unit.

The Main LV systems will principally comprise approximately 4No main LV switch panels, 30No sub-main panels supplying the Life Safety, critical, essential, less-essential and non-essential electrical systems throughout the new development. The Sub-main LV distribution systems will comprise sub-main panels, bus-bars, switches/circuit breakers etc as shown on the drawings.

An Electrical Network Management System (ENMS) will be required to monitor and automatically control the electrical systems/network during normal and abnormal conditions.

The ENMS will be required to:-

- Work in conjunction with the protection devices provided throughout the MV and LV distribution systems and where necessary carry out alternative switching of the systems as a result of MV or LV devices switching or tripping.
- Provide ‘event’ alarms at each control panel and on each display panel.
- Have password controlled ‘event’ acknowledgement at each control panel and in the FM office.
- Record MV and LV system events and, when required, provide print-outs showing all events.
- Enable authorised persons to control and carry out selective switching of the systems (manual override of any controlled/monitored device). This facility is to be password protected at each control/interface point and shall be available only in the generator control rooms and in the control rooms associated with the main incoming MV switch panel.
- Have separate passwords (higher levels of authorisation) for control of the MV systems.
- Have separate passwords for each user of the system and be able to record which user carried out which operation, alarm acknowledgement etc.
- Provide indication of the condition of the electrical network (hierarchical schematics) including the status of each item connected/monitored. This shall be achieved by the displaying of systems schematics on each of the display panels and identifying which of the devices are Closed, open, tripped withdrawn etc.
- Under partial or total mains failure conditions match the available supplies to the load and where necessary match the connected load to the available supplies.
- Control the switching of loads to meet the load step limits of the mains and the generators under all conditions.

- Provide output enable signals to the BMS to enable the BMS to start and stop (By the absence of the signals) the mechanical plant including chillers, fans, pumps, boilers, humidifiers etc. In this connection it should be noted that the BMS will need to be specially designed to accept the connection or removal of these ENMS signals as 'priorities' which need to be acted upon at a speed to suit the switching requirements of the Electrical systems.
- Apply the loads to the generators in an expedient manner to an agreed priority schedule.
- Control the necessary synchronisation with the mains and switching of the systems for both generator testing and when the mains are re-established after mains failure.
- Provide agreed control of the neutral earthing resistors for the various mains/generator paralleling situations.
- Capture and relay switchgear status, energy consumption, harmonic content, operation counter and fault indication to each of the interface control units and display these on the indicated schematics
- Be modular in its nature and be able to be extended
- Have 25% spare capacity.

The ENMS shall use dedicated cables that are not used for any other purpose.

Separate 'A' and 'B' ENMS system control units will be required and will be linked to provide the required hot standby and increased resilience. The linking between the two systems shall be as indicated in the concept schematic.

ENMS user display and control units will be required at the following locations:-

- The Energy Centre control room— control panel and systems display.
- Main MV Switchroom — control panel and systems display.
- Main LV Panel; A1 - systems display
- Main LV Panel; A2 - systems display
- Main LV Panel; B1 - systems display
- Main LV Panel; B2 - systems display
- the Estates Office – display unit and control unit with only facilities to accept alarms (i.e. it shall not be possible to control switching from this location)
- Security Control room – display unit and control unit with only facilities to accept alarms (i.e. it shall not be possible to control switching from this location)

Each systems display unit shall provide hierarchical schematics of the systems showing the status of the devices controlled and/or monitored. This including switchgear status, energy consumption, harmonic content, operation counter and fault indication

Power supplies to local ENMS panels shall be provided from local battery backed power supply units that have sufficient autonomy to maintain the local systems for a minimum period of 72 hours under mains failure conditions. Each of these power supply units shall be monitored such that alarms are raised in the event of a failure.

Systems Operation

General

The ENMS will be arranged/programmed to control the electrical systems to make the best use of the available sources of supply (be that mains and/or generators).

- Matching of the Generators to required load
  - When the load is less than the capacity of the sets available (including synchronised/paralleled units and available non-running units) then a minimum of 500kVA of spinning reserve shall normally be paralleled.

- Matching of the load to the available generators.
  - Low priority numbers (less essential) shall be disabled until sufficient generators are available.
  - Allocation of 'load priorities' to various load centres, energy users, load types etc. all to enable the highest priority loads to be connected first or disconnected last while maintaining the systems within design limits.

Although the exact load prioritisation schedule will need to be agreed with the Hospital Board it is expected to include various priority ratings such as those noted in the table below:-

Priority Rating	Outline description of Load
1	Statutory requirements – Evacuation lifts, smoke extract/pressurisation fans, sprinkler pumps, wet riser pumps etc. Generator auxiliary supplies
2.1	Riser 1 Category 4 and 5 area life safety lighting and small power.
2.2	Riser 2 Category 4 and 5 area life safety lighting and small power.
2.3	Riser 3 Category 4 and 5 area life safety lighting and small power.
2.4	Riser 4 Category 4 and 5 area life safety lighting and small power.
3.1	Riser 1 Category 3 area Heating and Vent systems
3.2	Riser 2 Category 3 area Heating and Vent systems
3.3	Riser 3 Category 3 area Heating and Vent systems
3.4	Riser 4 Category 3 area Heating and Vent systems
4	Essential heating and systems
5	Vertical transportation
6	Imaging equipment supplies
7.1	Less Essential Heating and Ventilation Systems
7.2	Less Essential Heating and Ventilation Systems
8	Imaging equipment supplies
9.1	Chillers and cooling – stage 1
9.2	Chillers and cooling – stage 2
9.3	Chillers and cooling - stage 3

It should be noted that some of these load priorities may, subject to actual loads, be either switched together or switched at different times or even be sub-divided further as the design is finalised.

Mains failure – When RHSC MV systems healthy

Under normal mains failure conditions (when the RHSC-DCN MV infrastructure is healthy) the standby generator systems will be required to start and synchronise sufficient generator sets to permit the following minimum RHSC-DCN loads to be re-connected:-

Elapsed Time from generator start signal	**Outline description of loads to be connected**	**Load STEP to be connected (kVA)**
15 seconds	RHSC-DCN and energy centre - Lighting, small power and statutory life safety	1000
25 seconds	RHSC-DCN and energy centre - General loads	1000
35+ Seconds	RHSC-DCN l and energy centre - Non essential loads	1000

Under extreme conditions when generators sets may not be available to start (due to maintenance of individual units or switchgear not being available etc) the 15 and 25 second loads to be applied shall also be as the above table with loads adjusted proportionally for the number of units available to start.

Under Mains failure conditions the initial load sequencing shall be as follows:-

- Start signal to transfer to alternative SPEN supply (Wait 1 second)
- Start Signal to Generator (Wait 2 second)
- Generator Synchronising Period (+12 seconds)
- Transfer to alternative SPEN supply (If available)
- Commence sequential load connection process
- If alternative SPEN supply not available
  - RHSC Main Breakers open
- Review available synchronised generators and commence sequential load connection process

After the initial load sequencing, the ENMS shall continue to match the connected load of the site to the available generators by:-

- Enabling greater loads by enabling further load priority signals and starting of available generators up to the capacity of the generators available
- Starting/synchronising/paralleling of further generators when the site load increases.

- Disabling loads priorities when the site load exceeds the available generator capacity

Mains failure – Elements of MV systems tripped or isolated.

If both the Incoming supplies fail while elements of the MV Systems are out of circuit then the ENMS shall automatically work to restore electrical supplies to the loads without supplies in accordance with the Truth Table (to be progressed at Preferred Bidder stage).

Where the above requires the generators to be started to supply the failed loads then the generator starting and load sequencing shall generally be similar to that noted for normal mains failures. It should however be noted that, unless specifically required by the Truth Table, healthy supplies to RHSC-DCN loads should not be isolated in the process.

Operating Scenarios

The systems will need to be programmed to ensure the best use is made of the available sources. This is expected to include:-

Condition	**Response**
Normal operation-	Electrical systems operates from preferred incoming supply
Single supply failure-	All loads transfer to the single healthy supply.
Twin supply failure- (with normal Generator start conditions)	After the pre-set monitoring period (adjustable 0 - 5 seconds) Generators start and synchronise as one common group. After 12 seconds from the generator start signal the transformer are energised in two stages. After 15 seconds from the generator start signal the maximum permissible load step is applied to the generators (1.5MVA) After 25 seconds from generator start signal a further maximum permissible load step is applied to the generators (1MVA) The remaining plant load is then introduced
Twin supply failure- (with abnormal Generator start conditions)	After the pre-set monitoring period (adjustable 0 - 5 seconds) Generators start and synchronise as one common group. After 15 second from the generator start signal maximum permissible loads are applied - Loads commensurate with the number of generators synchronised. After 25 seconds from the generator start signals maximum permissible additional loads are applied – Loads

Condition	Response
	commensurate with the number of generators synchronised. At 10 second intervals additional maximum permissible loads are applied until all generators are fully loaded.
Normal running on generators	The number of generators synchronised and supplying load are optimised to ensure that the number of units running matches the load with 2000kW spare. (i.e. N+1 generators on line)

MATERIALS AND WORKMANSHIP CLAUSES

V10 High voltage connection

To be read with Preliminaries/ General conditions

GENERAL

110 INCOMING ELECTRICITY SUPPLY
- Nature of current: Alternating.
- Phase: Three.
- Voltage: 11000 V.
- Source: Electricity Distributor.

120 ELECTRICITY DISTRIBUTOR
- Details: SPEN.

SYSTEM PERFORMANCE

210 DESIGN
- Design: Complete the design of the high voltage connection in accordance with the
- Electricity Distributor's guidelines.
- Proposals: Submit drawings showing equipment positions and routes, technical information and calculations.
- Evidence of agreement with Electricity Distributor: Submit.

220 SUPPLY CHARACTERISTICS
- Anticipated maximum demand: 3MVA.
- Maximum prospective short-circuit current: 7.9kA.
- Load voltage unbalance (maximum): In accordance with Engineering Recommendation P29.
- Supply arrangement: 2 No alternate supplies terminated Multi-breaker MV panel with two outgoing feeders that is supplied as part of SPEN's works.

EXECUTION

630A MANAGEMENT
- Establishing the supply: Manage and liaise with the Electricity Distributor and Electricity Supplier to establish the incoming electricity supply.
- Examine the installation and proposal drawings submitted by SPEN for the dual use switch panel and verify that the proposed outgoing MV cables can be installed and terminated

COMPLETION

920 DOCUMENTATION
- Operation and maintenance instructions: Submit.
- Record drawings: Submit.

V12 Generator systems

To be read with Preliminaries/ General conditions

GENERAL

115 RECIPROCATING INTERNAL COMBUSTION ENGINE DRIVEN ALTERNATING CURRENT GENERATOR SYSTEM Generators G1 to G3.

- System manufacturer: Board's choice.
- Internal combustion engine: Required.
  - Type: Compression engine.
- Internal combustion engine electrical equipment: Required.
- Governor: Required.
- Alternator: Required.
- Automatic voltage regulators: Required.
- Control panel: Required.
- Fuel: Diesel supply systems, as section S40.
  - Storage tanks: Day tank and Storage tank, as section S40.
- Exhaust and silencer: Custom.
- Vibration isolation mountings: As section Y31.
- Gas detection and alarm systems:
- Generator housing: Plant room and Submit design and cost proposals.
- Earthing: as drawings.
- Signs and notices: As section N15.
- Ventilation: Metal louvres, as section L10 and Submit design and cost proposals.
- Accessories:
  - Drip tray;
  - Emergency stop buttons;
  - Load bank; and
  - Safety guards and stone guards.

120 SYSTEM CONFIGURATION

- Configuration: To BS ISO 8528-1.
- Installation: Fixed.
  Mounting: With a base frame, integrally mounted control gear, switchgear and auxiliaries.
- Mounting type: Fully resilient.
  - Accessories: Lifting points.
- Engine and alternator connection:
  - Coupling: Manufacturer's standard.
  - Assembly: Manufacturer's standard.

140 INTERNAL COMBUSTION ENGINE ANCILLARIES

- Electrical equipment: Required.
  - Operating voltage: 24 V d.c.
  - Earth polarity: Negative.

SYSTEM PERFORMANCE

210 DESIGN

- Design: Complete the design of the generator system.
- Prime mover and alternator size: Take into account connected loads including ancillaries, harmonics and transient operation.
- Proposals: Submit drawings, technical information, calculations and manufacturers' literature. Include:
  - General arrangement drawings.
  - Control diagrams.
  - Prime mover and alternator data.
  - Power output curves.
  - Generator system efficiency at 50%, 75% and 100% full load.
  - Start up temperature (minimum).
  - Fuel and lubricating oil characteristics and consumption, as outlined in BS ISO 3046-1.
  - Minimum run time without fuel and lubricating oil tank replenishment.
  - Calculations for performance of acoustic enclosures and silencers.
  - Maintenance access dimensions.
  - Details of plinths and anti-vibration mountings.

215 LOAD CHARACTERISTICS

- Total load (active power): 2.0MW - Each unit.
- Total load (reactive power): 2.5MVA - Each unit.
- Load type/ size:
  - Air conditioning;
  - Battery charger;
  - Discharge lighting;
  - Fluorescent lighting;
  - Small power;
  - Lifts;
  - Medical imaging equipment;
  - Motors; and
  - UPS.

225 PERFORMANCE OF GENERATOR SYSTEMS

- Standard: To BS ISO 8528-1.
- Application: Continuous power.
- Electrical characteristics:
  - Number of phases: Three.
  - Voltage: 11000V.
  - Frequency: 50 Hz.
- Site criteria: Land use.
- Operation: Parallel operation with other generator systems and with the incoming electrical supply.
- Start-up mode: Automatic.
- Full load acceptance: for multiple synchronised generators
  55% Full load in 15 seconds
  90% full load in 22 Seconds
  100% full load 29 seconds.
  - Start-up time to full load acceptance (maximum): 29 seconds.
- Performance class: G3.

240 GENERATING SYSTEMS FOR SAFETY SERVICES

- Standard: To BS 7698-12.

- Performance class: 3.

250 SERVICE CONDITIONS

- Environment: Inside.
- Site temperature:
  - Maximum: 30°C.
  - Minimum: - 20°C.
- Altitude (above sea level): 100.
- Humidity (RH): Submit proposals.
- Atmospheric conditions: Within 10 km of coast.

260 SYSTEM MODE OF OPERATION

- Details: Refer to description of operation given in the outline scope of works document for greater details - However the general principles will be upon mains failure: The system senses mains failure, starts the generators while isolating the mains supply.

  The generators run up to rated speed, synchronise and applies the load in a controlled manner. The system monitors for system faults and alarms, and initiates emergency shutdowns/actions where required.

  The systems monitors the load and ensures the number of units running is commensurate with it.

  The systems monitor the applied load and ensures it is commensurate with the number of units available.

  On restoration of mains supply manual intervention will be required to synchronise the systems with the mains and hand the load back to the mains.

  The systems shall be capable of being tested using the site load without a break in the supply to the load.

265 GENERATOR SYSTEMS OPERATING IN PARALLEL

- Synchronization: Automatic.

270 FUEL AND OIL CONSUMPTION

- Fuel consumption (maximum): 520 Litres per hour per set at rated load.
- Oil consumption (maximum): Submit proposals.

275 DIESEL EXHAUST EMISSIONS

- Emission standard: E.U. Directive 2004/26/EC compliant.

280 CONNECTING GENERATORS TO THE PUBLIC SUPPLY NETWORK

- Standard: To Energy Networks Association G59/1.

290 NEUTRAL EARTHING

- Type: Switched neutral connection to earth.

PRODUCTS

310 GENERATOR SET

- Standards: To BS ISO 8528-1.
  - Internal combustion engine to BS ISO 8528-2 and BS 5514-6.
  - Governor: To BS 5514-4.
  - Alternator: To BS 5000-3, and BS ISO 8528-3 or BS EN 60034-22.
  - Automatic voltage regulator: To BS 4999-140.
  - Control panel: To BS ISO 8528-4.
- Manufacturer: Submit proposals.
  - Product reference: Submit proposals.

340 INTERNAL COMBUSTION ENGINES GENERALLY.

- Standards: To BS ISO 8528-2.
- Type: Compression engine.
- Manufacturer: Submit proposals.
  - Product reference: Submit proposals.
- Number of cylinders: Submit proposals.
  - Total displacement: Board's choice.
- Rated speed: 1500 rpm.
- Overspeed protection: To BS 5514-6.
- Air/ fuel intake: Turbo-charged.
- Air filters: Replaceable dry element type.
- Fuel filters:
  - Type: Replaceable paper type.
  - Filtration: To remove contaminants larger than 10 µm.
- Oil filters: Replaceable full flow type.
- Crankcase oil heater: Thermostatically controlled.
- Oil reservoir tank: To maintain the required oil level in the sump.
  - Reservoir capacity: Submit proposals.
  - Oil level monitor: Required.
  - Drain valve: Locate to provide gravity oil removal and easy maintenance.
  - Used oil container: Provide.
- Cooling system: Closed-circuit pressurized water based.
  - Coolant heater: Required.
  - Radiator: Generator Base Frame Mounted.

  Protective guard: Required.
  - Drain valve: Locate to provide easy maintenance.
  - Fan: Electric motor driven or Engine driven.
- Engine starting method: Electric starter motor .
  - Starter lockout: After 3 unsuccessful start attempts.
- Accessories: submit proposals.

345 INTERNAL COMBUSTION ENGINE ELECTRICAL EQUIPMENT

- Engine start battery: High performance plant to BS 6290-2 or Free electrolyte nickel cadmium batteries to BS 6260.
  - Capacity: Sufficient to Crank the engines 5 times at operating temperatures.
  - Charger: Batteries charged from mains when available, and charge alternator on when engine when running.
  - Lockable isolator: Required.
  - Location: Remote stand.
- Battery and charger for control panel: Required.

Capacity: Sufficient to enable control panel to function for 48 hours following mains failure.

350 GOVERNOR

- Standard: To BS 5514-4.
- Type: Electronic.
- Manufacturer: System manufacturer.
  - Product reference: Submit proposals.
- Mode of operation: To enable engine to operate continuously at rated speed from no-load to the rated full electrical load.
- Adjustments:
  - Acceleration rate;
  - Load gain;
  - Maximum speed;
  - Speed droop; and
  - Stability.

370A ALTERNATORS GENERALLY .

- Standard: To BS 5000-3, and BS ISO 8528-3 or BS EN 60034-22.
- Type: Synchronous.
- Manufacturer: Submit proposals.
- Product reference: Submit proposals.
- Excitation: Submit proposals.
- Overspeed withstand: 120% rated speed.
- Underspeed withstand: 95% rated speed.
- Short-circuit withstand capability (minimum): 2.5 times full-load short-circuit current for 10 s.
- Thermal classification to BS EN 60085: H.
- Ingress protection to BS EN 60034-5: IP32.
- Anti-condensation heater: Required.
- Protection:
  MV Circuit breaker with over current and earth fault inverse definite minimum time lag relay.
  Stator earth fault and rotor earth fault.
  General fault protection
- Output cable terminal boxes: Removable lid and side covers.
  - Outgoing cable entry: Top - Submit proposals.

380 AUTOMATIC VOLTAGE REGULATORS

- Standard: To BS 4999-140.
- Manufacturer: System manufacturer.
  - Product reference: Board's choice.
- Grade: 2.

450 CONTROL PANEL Individual controllers for Units G1 to G12.

- Standard: To BS ISO 8528-4.
- Manufacturer: System manufacturer.
  - Product reference: Submit proposals.
- Configuration: Group controls, alarms and indicators in common control panel.
- Controls:
  - Alarm reset;
  - Automatic/ manual switch;
  - Emergency stop;
  - Frequency adjust;
  - Key operated start/ stop switch;
  - Lamp test;
  - Load bank test;
  - Mains failure simulation; and
  - Maintenance bypass.
- Indicators:
  - Electrical:
  - Ammeter with phase selector switch;
  - Battery voltage;
  - Frequency meter;
  - Generator synchronized;
  - kW·h meter;
  - Power factor meter with phase selector switch; and
  - Voltmeter with phase selector switch.
  - Prime mover:
  - Coolant temperature gauge;
  - Fuel gauge;
  - Oil pressure gauge; and
  - Tachometer.
  - Status:
  - Coolant heater on;
  - Emergency stop activated;
  - Generator in use;
  - Generator ready;
  - Generator off-load indication ;
  - Generator on-load indication ;
  - Hours run meter;
  - Mains available indicator; and
  - Mains failure indicator.
- Alarms:
  - Visual:
  - Battery charge failure;
  - Battery low voltage;
  - Cooling fan failure;
  - Engine overspeed;
  - Engine start failure;
  - Engine underspeed;
  - High oil temperature;
  - Low fuel; and
  - Low oil pressure
  - Audible: Common alarm with mute button.
  - Remote generator system alarm: to ENMS and BMS.

450A CONTROL PANEL System controller - One per engine hall and one per Main MV intake room.

- used for Electrical network control and monitoring.
  Standard: To BS ISO 8528-4.
- Manufacturer: System manufacturer.
  - Product reference: Submit proposals.
- Configuration: Group controls, alarms and indicators in common control panel.
- Controls: Electrical Network control.
- Indicators:
  - Electrical: status of all devices connected (Open, Closed, withdrawn, tripped earthed etc) Primary power failure to any control panel. .
  - Prime movers: status of all generators .
  - Status: of incoming supplies.

  Alarms:
  - Visual: common alarm on the panel and common alarm xenon beacon externally on the wall of the Energy Centre.
  - Audible: Common alarm with mute button.
  - Remote generator system alarm: bms.

470 DAY TANKS

- Manufacturer: Submit proposals.
  - Product reference: Submit proposals.
- Capacity: 3200 Litre for each set.
- Location: Adjacent to generators.
- Fuel transfer: Gravity fed.
- Low level indicator and alarm: Required.
- Fittings:
  - Drain valve;
  - Fill pipe and cap;
  - Isolating valve;
  - Tank level indicator; and
  - Vent pipe.

480 DRIP TRAYS

- Type: Removable.
- Overflow outlet pipe: Run to a location where a container can be fitted below the pipe outlet.
- Capacity: 1.5 times the oil capacity of the prime mover sump.

485 EMERGENCY STOP BUTTONS

- Type: Red 40 mm mushroom head, hand operated.
  - Key to reset: Required.
- Manufacturer: Board's choice.
  - Production reference: Board's choice.
- Operation: To shut down the generator system immediately on activation.
- Mounting: Pedestal mounted.

490A LOAD BANKS for installation testing

- Type: 11KV inductive load (LV load banks and step down transformers would be acceptable) Testing of the mechanical/thermal performance of the installation shall be carried by

Connecting the load banks to the spare switches on the Energy Centre MV switch boards.
Such tests shall be completed and then re-demonstrated during Hot summer weather conditions.

- Manufacturer: Board's choice.
- Product reference: Board's choice.
- Rating: 110% rated load.
- Enclosure:
  - Ingress protection to BS EN 60529: Boards Choice.
  - Anti-condensation heater: Boards choice.
- Arrangement: Switch in equal load steps controlled from the generator system control panel.
  - Number of load steps: to mimic ideal load application.
- Forced air cooling with run on timer: Required.
- Selective load control and load indicator: Required.
  - Load step size: to mimic ideal load application.

495 GENERATOR SET FACTORY INSPECTIONS AND TESTS

- Notice before inspections: 14 d.
- Test equipment calibration certificates: Submit.
- Witnessing: Arrange for factory testing to be witnessed by the contract administrator and 5 colleagues.
- Testing: To BS ISO 8528-6.
  - Type: Acceptance tests and Functional tests.

498 GENERATOR SET ACCEPTANCE TESTS

- Location: At manufacturer's works with electrical load and On site.
- Checks:
  - Unit 1
  - Unit 2
  - Unit 3
  - Parallel operation
- Measurements:
  - Unit 1
  - Unit 2
  - Unit 3
  - Parallel operation
- Acceptance test report: To BS ISO 8528-6.
- Results: Submit.

499 GENERATOR SET STANDARD FUNCTIONAL TESTS

- Standard: To BS ISO 8528-6.
- Location: At manufacturer's works under test-bed conditions.
- Results: Submit.

FABRICATION

550 CUSTOM EXHAUSTS

- Exhaust: In accordance with BS 5854.
- Type: Natural draught.
- Manufacturer: System manufacturer.
- Material: Stainless steel.
- Fittings:
  - Adaptors;
  - Bends;
  - Firestop plates;
  - Flexible coupling;
  - Flue collector boxes;
  - Ridge terminal and adaptors;
  - Storm collars and flashings; and
  - Wall brackets.
- Exhaust silencers
  - Type: Baffle.

560 FABRICATION PROPOSALS

- Design: Complete the design of the generator system.
- Prime mover and alternator size: Take into account connected loads including ancillaries, harmonics and transient operation.
- Proposals: Submit drawings, technical information, calculations and manufacturer's literature. Include:
  - General arrangement drawings.
  - Control diagrams.
  - Prime mover and alternator data.
  - Power output curves.
  - Generator system efficiency at 50%, 75% and 100% full load.
  - Start up temperature (minimum).
  - Fuel and lubricating oil characteristics and consumption, as outlined in BS ISO 3046-1.
  - Minimum run time without fuel and lubricating oil tank replenishment.
  - Calculations for performance of acoustic enclosures and silencers.
  - Maintenance access dimensions.
  - Details of plinths and anti-vibration mountings.

EXECUTION

620 INTERRUPTIONS TO EXISTING SUPPLIES

- Notice before interruption: 28.
- Connection to existing switchgear: Submit proposals.

630 INSTALLING GENERATOR SYSTEMS

- System: Install to provide access for maintenance without having to remove connections and accessories.
- Fuel pipelines: Flexible final connection to engine.
- Safety guards and stone guards: Install.

640 INSTALLING EXHAUSTS

- Location: generally As drawings.
- Arrangement:

- Position to minimize noise levels and prevent exhaust gases entering the building through doors, windows or ventilation systems.
- Slope exhaust away from engine. Terminate exhaust with rain cap.
- Seal fabric penetrations to provide same level of protection from transmission of sound and fire as original fabric.
- Apply minimum of 50 mm lagging to exhaust in plant rooms.

650 INSTALLING CONTROL PANELS
- Location: Remote free standing.

655 INSTALLING EMERGENCY STOP BUTTONS
- Location: adjacent to each generator and on exit to each generator room.

670 INSTALLING DRIP TRAYS
- Location: Under parts of the generator system where fuel or lubricant leakage may occur.

COMPLETION

910 TESTING AND COMMISSIONING GENERALLY
- Standard: To BS ISO 8528-6.
- Operation of control panel: Verify.
- Cold start-up test: Record start-up time with generator idle for 24 h before.
- Results: Submit.
- Notice before commencing tests (minimum): 2 weeks.

940 TESTING GENERATORS OPERATING IN PARALLEL
- Synchronization controls: Verify.
- Load sharing: Verify.
- Operation of controls: Verify.
- Start-up and shutdown: Verify.
- Results: Submit.

950 PADLOCKS AND KEYS
- Locking mechanism: Five lever.
- Material: Brass.
- Quantity: Submit proposals.
- Padlock keys: Two for each padlock.
- Padlock identification: Stamp padlock describing its function.

960 DOCUMENTATION
- Operation and maintenance instructions: Submit.
- Record drawings: Submit.

970 SPARES AND CONSUMABLES
- Indicator lamps: Supply 2 of each type used.
- Filter elements: Supply one set.

980 LABELLING
- Rating plate: To BS ISO 8528-5.

V20 High voltage distribution systems

To be read with Preliminaries/ General conditions

GENERAL

110 HIGH VOLTAGE DISTRIBUTION SYSTEM whole.

- High voltage connection: New incoming supply, as section V10.
- Switchgear:
  - Existing;
  - Ring main units, as section V21;
  - Switchboards, as section V21; and
  - Switchgear assemblies, as section V21.
- Transformers: Fluid immersed, as section V22 and Dry type as section V23.
- Cabling: Low smoke thermosetting insulated, as section V24.
  - Accessories: High voltage cable terminations, as section V24 and Underground concrete cable protection covers, and protection tapes for underground cables, as section V24 and underground earthenware cable ducts.
- Containment:
  - Buried conduit, as section Y63;
  - Cable ladders, as section Y60; and
  - Cable trays, as section Y60.
  - Accessories: Cable cleats, as section Y60 and Protective covers, as section Y60.
- Building works:
  - Trenches, pipeways and pits, as section P30;
  - Holes, chases, covers and supports, as section P31; and
  - Plinth and bund systems, as section P33.

SYSTEM PERFORMANCE

210 DESIGN

- Design: Complete the design of the high voltage distribution system.
- Proposals: Submit drawings, technical information, calculations and manufacturers' literature.

220 GRADING STUDY

- Scope: Complete (including existing, if any) high voltage distribution system.
- Fault calculations: Include fault impedance, and short circuit, asymmetric and symmetrical fault current analysis.
- Protective devices: Coordinate the selection and adjustment of protective device settings to achieve discrimination throughout the fault level range. Grade so that a fault on any outgoing branch circuit is cleared by the switching device installed in the faulted branch circuit without affecting the other outgoing branch circuits. Demonstrate discrimination using time-current coordination curves with single line diagrams, in the study report.
- Manufacturers' details and recommended settings: Include in study report.
- Study report: Submit.

EXECUTION

620 INSTALLING HIGH VOLTAGE DISTRIBUTION SYSTEMS

- Layout: Position cabling and equipment to provide safe and easy access for operation and maintenance.

COMPLETION

910 TESTING AND INSPECTION

- Testing and inspection results: Submit.

940 DOCUMENTATION

- Operation and maintenance instructions: Submit.
- Record drawings: Submit.

V21 High voltage switchgear

To be read with Preliminaries/ General conditions

PRODUCTS

310 HIGH VOLTAGE SWITCHGEAR GENERALLY

- Standards: To BS EN 62711-200, BS EN 60694 and IEC 60466.

320 HIGH VOLTAGE SWITCHBOARDS GENERALLY

- Type: Cubicle .
- Manufacturer: FKI Switchgear, Schneider or equal.
  - Product reference: Board's choice.
- Access: Rear.
- Switchgear arrangement: Submit proposals.
- Voltage rating: 12 kV.
- Prospective rated short circuit current (1 s): 25kA
- Terminals: Suitable for the dry connection of copper and aluminium conductors.
- Enclosure: Manufacturer's standard.
  - Accessories: Anti-condensation heater and thermostat and Padlocks and keys.
- Service conditions: Normal indoor.
- Functional units: As drawings.
- High voltage busbars: Required.
- Transportation or installation restrictions: As drawings.
- Accessories:
  - Manufacturer's standard;
  - Ammeters;
  - Voltmeters ;
  - Frequency meters;
  - Phase meters;
  - Power factor meters;
  - Wattmeters; and
  - Current transformers.

330 RING MAIN UNITS GENERALLY

- Manufacturer: Submit proposals.
  - Product reference: Submit proposals .
- Ring switches: High voltage switch-disconnectors.
- Outgoing feeder device: High voltage circuit breaker
  - Protection relay: Required
- Transportation or installation restrictions: None.

340 HIGH VOLTAGE EARTHING SWITCHES

- Standard: To BS EN 62271-102.
- Manufacturer: Board's choice.
  - Product reference: Submit proposals.
- Circuit interrupting medium: Vacuum.
- Number of poles: 3.
- Rated voltage: 12 kV.
- Rated insulation levels:

- Short time power frequency: 12 kV.
- Lightning impulse: 23 kV.
- Rated frequency: 50 Hz.

- Rated current: 630 A.
- Rated short time withstand current: 50 kA for 1 s .
- Short circuit making current: Manufacturer's standard.
- Switch class: E2.
- Operating mechanism: Independent power

350A HIGH VOLTAGE CIRCUIT BREAKERS GENERALLY

- Standard: To BS EN 62271-100.
- Manufacturer: Submit proposals.
  - Product reference: Submit proposals .
- Circuit interrupting medium: Vacuum.
- Number of poles: 3.
- Surge arrestors: Required.
- Rated voltage: 12 kV.
- Rated insulation level:
  - Short time power frequency: 32 kV.
  - Lightning impulse: 23 kV.
- Rated frequency: 50 Hz.
- Rated current: 630 A.
- Rated short time withstand current: 25 kA for 1 s.
- Short circuit making current: Manufacturer's standard.
- Rated operating sequence: CO-5-CO.
- Rated break time: Manufacturer's standard.
- Circuit breaker class: E2
- Operating mechanism: Stored energy.
- Type of operation: Remote.
- Method of installation: Withdrawable
- Integral earthing switch: Board's choice.
- Minimum degree of ingress protection to BS EN 60529: IP31
- Mechanical interlocking: Captive key exchange type with square faced key and alphabetical or numerical coded operating face.
- Intertripping: Required wher.
- Protection:
  - as drawings
- Remote control and monitoring unit: Required.
  - Functions: Remote control and circuit-breaker position indicators.

370 HIGH VOLTAGE SWITCHES GENERALLY

- Standard: To BS EN 60265-1.
- Manufacturer: Submit proposals.
  - Product reference: Submit proposals .
- Circuit interrupting medium: Vacuum.
- Number of poles: 3.
- Rated voltage: 12 kV.
- Rated insulation levels:
  - Short time power frequency: 23 kV.
  - Lightning impulse: 23 kV.
  - Rated frequency: 50 Hz

- Rated current: 630 A.
- Rated short time withstand current (1 s): 25 kA.
- Short circuit making current: Manufacturer's standard.
- Switch class: M2.
- Operating mechanism: Independent manual.
- Integral earthing switch: Submit proposals.

380 HIGH VOLTAGE SWITCH-DISCONNECTORS GENERALLY

- Standard: To BS EN 60265-1.
- Manufacturer: Submit proposals.
  - Product reference: Submit proposals .
- Circuit interrupting medium: Vacuum.
- Number of poles: 3.
- Rated voltage: 12 kV.
- Rated insulation levels:
  - Short time power frequency: 23 kV.
  - Lightning impulse: 23 kV.
- Rated current: 630 A.
- Rated short time withstand current (1 s): 25 kA.
- Short circuit making current: Manufacturer's standard.
- Switch class: E3.
- Operating mechanism: Stored energy.
- Integral earthing switch: Submit proposals.

410 HIGH VOLTAGE BUSBARS GENERALLY

- Standard: To BS 159.
  - Approval: ASTA certified.
- Manufacturer: Submit proposals.
  - Product reference: Submit proposals .
- Material: Copper.
- Insulation medium: Manufacturer's standard.
- Number of poles: 3.
- Extendable: Required
- Rated voltage: 12 kV.
- Rated insulation levels:
  - Short time power frequency: 32 kV.
  - Lightning impulse: 23 kV.
- Rated frequency: 50 Hz.
- Rated current: 630 A.

420 AMMETERS AND VOLTMETERS

- Standard: To BS 89-2.
- Manufacturer: Submit proposals.
  - Product reference: Submit proposals.

421 FREQUENCY METERS

- Standard: To BS 89-4.
- Manufacturer: Submit proposals.
  - Product reference: Submit proposals.

422 PHASE METERS AND POWER FACTOR METERS

- Standard: To BS 89-5.
- Manufacturer: Submit proposals.
  - Product reference: Submit proposals.

423 WATTMETERS

- Standard: To BS 89-3.
- Manufacturer: Submit proposals.
  - Product reference: Submit proposals.

430 CURRENT TRANSFORMERS

- Standard: To BS EN 60044-1.
- Manufacturer: Submit proposals.
  - Product reference: Submit proposals .
- Type: Submit proposals
- Accuracy classification:
  - For use with protective equipment: 5P or 10P to suit relays and discrimination.
  - For use with measuring equipment: Boards proposals to suit meters used.
- Primary rating: Submit proposals
- Secondary rating: 1 A
- Rated short time current: Match the circuit in which the current transformer is installed.
- Test links: Provide for connection of calibration instruments and meters.

440 DIGITAL MULTIFUNCTION METERING EQUIPMENT

- Manufacturer: Submit proposals
  - Product reference: Submit proposals
- Display type: Submit proposals .
- Minimum degree of ingress protection to BS EN 60529: Match high voltage switchgear.
- Metering functions:
  - Active energy (kW·h);
  - Active power (kW);
  - Apparent power (kV·A);
  - Frequency (Hz);
  - Maximum active power demand (kW);
  - Phase currents (A);
  - Power factor;
  - Pulsed output (kW h); and
  - Reactive power (kV·A(r))
- Mounting: Recessed into switchgear

460 INDICATOR LAMPS

- Manufacturer: Submit proposals
  - Product reference: Submit proposals
- Lamp type: Cluster LED with bezel. Standardize.
- Lens colour: To BS EN 60073.
- Lamp mounting: Recessed.
- Common lamp test facility: Required.
- Access for lamp replacement: Externally from front.

480A HIGH VOLTAGE SWITCHGEAR TRIPPING AND CLOSING UNITS

- Manufacturer: Submit proposals.
  - Product reference: Submit proposals .
- Battery capacity: Adequate to supply the standing load for 24 h on loss of a.c. supply. After 24 h, capable of tripping and closing the circuit breakers 10 consecutive times.
- Enclosure: To BS EN 62208.
  - Material: Steel.
  - Minimum degree of ingress protection to BS EN 60529: IP31
  - Lockable hinged door: Required.
  - Mounting: Floor
  - Finish to enclosure and supporting framework: Corrosion resistant paint
  - Colour: Match high voltage switchgear
- Incoming supply protection: Miniature circuit breaker to BS EN 60898.
- Charger type: Constant voltage current limiting.
- Battery type: Sealed nickel cadmium to BS EN 60622
- Output:
  - Type: Direct current (d.c.).
  - Voltage: 48 V
- Digital voltmeter: Required.
- Indicator lamps:
  - Mains supply healthy.
  - Mains supply failed.
  - Charger failed.
  - Float charge.
  - Boost charge.
  - Low voltage.
  - High voltage.
  - Positive and negative earth fault alarms.
  - Low electrolyte (vented cells only).
- Common fault relay contact: Required.
  - Type: Volt free.
- Vented battery labelling: Describe the treatment required following contact with the electrolyte and warn of the explosion risk caused by naked flames.
- Remote monitoring facility: ENMS and BMS

490 VOLTAGE TRANSFORMERS

- Standard: To BS EN 60044-2 and/or BS EN 60044-5 to sit application.
- Manufacturer: Switchboard manufacturer.
  - Product reference: Board's choice.
- Type: Cast resin encapsulated.
- Accuracy classification: To suit protection, metering and control systems.
- Primary voltage: 12 kV
- Secondary voltage: 110 V.

495 PADLOCKS AND KEYS

- Manufacturer: Submit proposals.
  - Product reference: Submit proposals.
- Locking mechanism: Five lever.
- Material: Brass.

496 PADLOCK AND KEY CABINETS

- Type: Wall mounted metal.

- Finish: Match switchgear.

- Manufacturer: Board's choice.
  - Product reference: Board's choice.

FABRICATION

510 SWITCHGEAR GENERALLY

- Switchgear: Factory built.
- Free standing switchgear: Provide lifting bolts within reinforced top frame.
- Insect proofing: Cover assembly openings with non-combustible and non-corroding insect proof mesh.

515 PROPOSALS

- Content: Include the following:
  - Overall dimensions.
  - Degree of ingress protection.
  - Mounting and fixing details.
  - Builders work requirements including details of cast in rails.
  - Fault level and rated short circuit characteristics.
  - Functional unit details.
  - Details of paint systems and colour finishes.
  - Door swings.
  - Access panel details.
  - Schedule of labels.
  - Dimensioned general arrangement drawings, plans elevations and sections.
  - Shipping sections.
  - Cable gland plate details.
  - Routing of cables within assembly.
  - Arrangement of busbars, connections and supports.
  - Internal controls, instrument and meter diagrams.
- Proposals: Submit before fabrication.

590 FACTORY INSPECTIONS AND TESTS

- Notice before inspecting and testing: 28d
- Inspections:
  - Fabrication: Inspection not required
  - Assembly completed, busbars exposed and functional units assembled: Inspection not required.
- Testing: In accordance with BS EN 62271-100 and BS EN 60694.
  - Factory testing of completed assembly: Required
  - Routine tests: Required.
  - Special tests: Interlocks and interfaces.
- Test equipment calibration certificates: Submit.
- Witnessing: Arrange for factory testing to be witnessed by the contract administrator and 3 colleagues.
- Test and inspection reports: Submit.

EXECUTION

610 ALTERATIONS TO EXISTING SWITCHGEAR

- Standards: In accordance with manufacturers' or fabricator's instructions and type test certificates.
- Alterations: Submit records of alterations made to assemblies.

620 INSTALLATION GENERALLY

- Transportation, off-load and installation: Submit method statement.
- Fixing equipment: Fix in accordance with manufacturer's instructions.
  - Fasteners: Zinc electroplated.
- Assembly: Line and level panels in accordance with manufacturer's or fabricator's instructions.
  - Interconnect busbars.
  - Connect earthing conductor to system main earth terminal.
  - Replace fittings removed for transport.
  - Clearance (minimum): 1000 mm front and rear.

640 CONNECTIONS

- Incoming high voltage cables: Connect to switchgear.

650 INSTALLING METERING EQUIPMENT

- Digital metering equipment: Connect to building management system.

COMPLETION

910 CLEANING AND GENERAL INSPECTION

- Dust and debris: Remove.
- Completed installation: Inspect in accordance with BS EN 60694 and switchgear manufacturer's or fabricator's instructions.
- Labelling: Verify.
- Fuse ratings: Check and confirm.
- Enclosure earthing: Verify.
- Cables terminations: Inspect.
- Reports: Submit.

915 LABELLING

- Name plates in accordance with BS EN 60694: Provide.
- Equipment identification labels: . . . . .
- Anti-condensation heaters: Provide caution notices advising against accidental switching off.
- Standby power: Provide danger warning notices stating that assemblies may be energized from more than one source.
- Indicator lamps: Label each lamp describing its function.
- Fuses, terminal blocks and other assembly components: Label describing their purpose.
- Spare fuses: Label, describe their rating.
- Cabinets for padlocks and spare keys: Label.

920 TESTING AND COMMISSIONING

- Notice before testing and commissioning: 28d
- Testing generally: In accordance with BS EN 60694 and BS EN 62271-200
- Method statement: Submit.
- Earthing: Check and verify.
- Protective device settings: Configure to match the grading study.
- Voltage test: In accordance with BS EN 62271-100.
- Insulation resistance tests: Carry out for:
  - Ancillary trip and alarm wiring with any fuses and remote connections removed (500 V d.c.).
  - Anti-condensation heaters (500 V d.c.).
- Operation of alarm and trip devices: Check and verify.
- Indicators: Verify correct operation.
- Intertripping: Verify correct operation.
- Anti-condensation heaters: Check and confirm correct operation.
- Enclosure access interlocks: Check and confirm correct operation.
- Gas tightness of gas filled compartments: Verify.
- Condition of gas in gas filled compartments: Determine in accordance with BS EN 60480.
- Inspection and test results: Submit.

930 SPARE TOOLS

- Tools: Supply the tools necessary for maintaining the equipment, including racking handles and a torque spanner.
- Tool cabinet: Include name plate, labelled shelves and non-lockable door.
  - Dimensions: Size for storing racking handles, special tools, spare lamps, spare fuse links and other equipment necessary for satisfactory assembly and operation.
  - Location: Separate wall mounted, with finish to match switchgear

940 PADLOCKS AND KEYS

- Quantity: 6.
- Padlock keys: Two for each padlock.
- Padlock identification: Stamp padlock describing its function.

950 CALIBRATION CERTIFICATES

- Certificates of calibration for meters and instruments: Submit.

960 SPARES AND CONSUMABLES

- Manufacturer's recommended spares: Supply two sets.
- Spare fuses: Two of each type and rating used.
- Operating handles for circuit breakers and switches: One per device.

V22 Fluid immersed transformers

To be read with Preliminaries/ General conditions

PRODUCTS

310 TRANSFORMER Energy centre - step down generally

- Standards: To BS EN 60076-1, BS EN 50464-1 and BS 6436.
- Manufacturer: Submit proposals.
  - Product reference: Submit proposals.
- Transformer operation: Perform as specified for at least two years under the service conditions.
- Compliance with specified performance: Submit evidence.
- Transformer type: Low loss.
  - Losses: Submit details.
- Service conditions:
  - Application: Network distribution.
  - Generator connection: Not applicable.
  - Suitable for operation in parallel with other transformers: Required.
  - Altitude: Less than 1000 m above sea level
  - Ambient temperature:
    Minimum: -25°C .
    Maximum: 40°C .
- Voltage waveform:
  - Supply:
    Total harmonic distortion: Less than 5%.
    Even harmonic distortion: Less than 1%.
  - Load: Symmetrical three phase supply .
  - Frequency: 50 Hz .
  - Phases: Three .
- Duty: Approximately balanced and sinusoidal continuous three phase loading .
- Environmental conditions: Normal, with ordinary pollution rates and Outdoor .
- Transportation or installation restrictions: Craned onto and off roof. .

312 MANUFACTURER'S INFORMATION

- General arrangement drawings: Submit fully dimensioned and detailed general arrangement drawings including:
  - Weight of core and winding assembly.
  - Weight of tank and fittings.
  - Total weight including oil.
  - Quantity of oil.
  - Base details.
  - Cable box details.
  - Rating and connection plate details.
  - Arrangement and connection drawings for ancillary equipment.
- Transformer ancillary equipment: Submit manufacturer's literature.
- Type test certificates: Submit. Include:
  - Temperature rise.
  - Lightning impulse.
  - Partial discharge.
  - Sound level.

315 TRANSFORMER COOLING

- Type:
  - Internal dielectric cooling medium: Insulating liquid with a fire point > 300°C (K). Circulation method: Natural thermosyphon cooling in windings (N) .
  - External cooling medium: Air (A) . Circulation method: Natural convection (N) .
- Forced cooling controls: Not applicable.

320 FLUID PRESERVATION EQUIPMENT

- Conservator: Dehydrating (silica-gel) breather.

325 RATED POWER

- Rated apparent power: 2000 kV·A.
- Enhanced rating with additional cooling: Not applicable.

330 EARTHING

- High voltage system earthing: as drawings.
- Low voltage system earthing: TNC-S.

335 VOLTAGE RATIO AT PRINCIPLE TAPPING

- Primary winding to secondary winding: 11000:400. (No load)

350 CONNECTION AND PHASE DISPLACEMENT

- Vector group to BS EN 60076-1: Dyn11.

355 PRIMARY VOLTAGE TAPPINGS

- Sizes: Variations upto _8% and down to -10% in 8 steps.
- Tap change facility: On-load.
  - Type: Manual.

358 MANUAL TAP CHANGE FACILITY

- Position indicator: Required.
- Controls: External mounted.
- Controls: Lockable. Supply padlock and two keys.

365 TANK CONSTRUCTION

- Material and construction: Welded mild steel fabricated to prevent distortion when the complete transformer is lifted, jacked or transported.
  - Finish: Manufacturer's standard.
- Accessories:
  - Earthing boss tapped M12;
  - Filter valves;
  - Flanged fluid drain valve with closed position padlocking facility. Fitted with a gasketted cover plate;
  - Fluid drain valve with facility for padlocking in the closed position with padlock and two keys. Fitted with a female tapped outlet and a plug;
  - Fluid filler with filter and plug/ cap;
  - Jacking lugs;
  - Lifting lugs;
  - Marshalling box;

- Pulling eyes; and
- Sight glass type fluid level indicator.

367 INDICATORS AND ALARMS

- Buchholz relay: With adjustable alarm and trip contacts.
- Dial type oil level indicator: With adjustable alarm and trip contacts.
- Dial type oil temperature indicator: With adjustable alarm and trip contacts.
- Dial type winding temperature indicator: RequiredWith adjustable alarm and trip contacts.
- Pressure relief device: With adjustable alarm and trip contacts.
- Local audible alarm systems: Not required.

370 NOISE EMISSION CONTROL

- Sound pressure level (maximum): 50 dBA at 1 m.
- Anti-vibration mountings: Required.

375 HIGH VOLTAGE AND LOW VOLTAGE CABLE TERMINATIONS

- Position: On opposite sides.
- Cable terminations: High voltage required and Low voltage required.
  - Cables: High voltage as section V24 and Low voltage as section V32.

380 HIGH VOLTAGE CONNECTION ARRANGEMENT

- Cable entry: Bottom.
- Type of enclosure: Flange and terminations suitable for direct connection to ring main unit.

390 LOW VOLTAGE CONNECTION ARRANGEMENT

- Cable entry: Bottom.
- Type of enclosure: Flange and connections suitable for direct connection to low voltage switchboard.

400 FACTORY INSPECTIONS

- Notice before inspections: 14 days.
- Testing: In accordance with BS EN 60076-1.
  - Routine tests: Undertake
  - Type tests: Not required.
  - Special tests: NONE.
- Test equipment calibration certificates: Submit.
- Witnessing: Arrange for factory testing to be witnessed by the contract administrator and 3 colleagues.
- Test report: Submit

EXECUTION

610 INSTALLATION GENERALLY

- Transportation, off-load and installation: Submit method statement.
- Assembly: Replace fittings removed for transport.

620 INSTALLING CONTROLS, INDICATORS AND ALARMS

- Controls, indicators and alarms: Connect to marshalling box.
- Marshalling box location: Tank mounted.

COMPLETION

910 CLEANING AND GENERAL INSPECTION

- Dust and fluid: Remove.
- Tank and fittings: Inspect.
- Fluid leaks: Check.
- Breather: Verify fitment and confirm silica-gel crystals are blue.
- Operation of tap changer over the operating range: Verify.
- Transformer earthing: Verify.
- Cable terminations: Inspect.
- Fluid levels: Check and confirm correct.
- Reports: Submit.

915 LABELLING

- Rating plate in accordance with BS EN 60076-1: Provide.
- Identification label: Reference Number.

920 TESTING AND COMMISSIONING

- Method statement: Submit.
- Insulation resistance tests: Carry out for:
  - High voltage winding to earth (1000 V d.c.).
  - Low voltage winding to earth (500 V d.c.).
  - High voltage winding to low voltage winding (1000 V d.c.).
  - Ancillary trip and alarm wiring with fuses and remote connections removed (500 V d.c).
  - Cooling fan motors (500 V d.c.).
- Operation of level, alarm, and trip devices: Check and verify. Test Buchholz relays using nitrogen injection.
- Dielectric strength: Sample the fluid and test in accordance with BS 5263. Confirm the breakdown strength is acceptable.
- Cooling fan motors thermal overloads: Check and confirm correct operation.
- Forced cooling temperature controls: Check and confirm correct operation.
- Tap changer: Set on the principle setting and padlock in position.

925 OIL TESTS

- Tests: In accordance with BS 5263.
  - Sample interval: 3 months and 12 months after Practical Completion.

930 PADLOCKS AND KEYS

- Locking mechanism: Five lever.
- Material: Brass.
- Quantity: 4.
- Padlock keys: Two for each padlock.
- Padlock identification: Stamp padlock describing its function.

940 DOCUMENTATION

- Operation and maintenance instructions: Submit.
- Record drawings: Submit.

V23 Dry-type transformers

To be read with Preliminaries/General conditions

PRODUCTS

310 TRANSFORMER Energy Centre, step up

- Standards: To BS EN 60076-11 and To BS 7844-1.
- Manufacturer: Submit proposals.
  - Product reference: Submit proposals.
- Transformer operation: Perform as specified for at least two years under the service conditions.
- Compliance with specified performance: Submit evidence.
- Transformer type: Low loss.
  - Losses: Submit details.
- Transformer configuration: Encapsulated
- Service conditions:
  - Application: Generator.
  - Generator connection: Through switchgear.
  - Suitable for operation in parallel with other transformers: Not required.
  - Altitude: Less than 1000 m above sea level
  - Ambient temperature:
  - Minimum: -25°C.
  - Maximum: 40°C.
- Voltage waveform:
  - Supply:
  - Total harmonic distortion: Less than 5%.
  - Even harmonic distortion: Less than 1%.
  - Load: Symmetrical three phase supply.
  - Frequency: 50 Hz.
  - Phases: Three.
- Duty: Approximately balanced and sinusoidal continuous three phase loading.
- Environmental conditions: Class E1.
- Fire resistance: Class F0.
- Transportation or installation restrictions: Submit proposals.

310A TRANSFORMER - step down

- Standards: To BS EN 60076-11 and To BS 7844-1.
- Manufacturer: Submit proposals.
  - Product reference: Submit proposals.
- Transformer operation: Perform as specified for at least two years under the service conditions.
- Compliance with specified performance: Submit evidence.
- Transformer type: Low loss.
  - Losses: Submit details.
- Transformer configuration: Encapsulated
- Service conditions:
  - Application: Network distribution.
  - Generator connection: Not applicable.
  - Suitable for operation in parallel with other transformers: Not required.

- Altitude: Less than 1000 m above sea level
- Ambient temperature:
- Minimum: -25°C.
- Maximum: 40°C.

- Voltage waveform:
  - Supply:
  - Total harmonic distortion: Less than 5%.
  - Even harmonic distortion: Less than 1%.
  - Load: Symmetrical three phase supply.
  - Frequency: 50 Hz.
  - Phases: Three.
- Duty: Approximately balanced and sinusoidal continuous three phase loading.
- Environmental conditions: Class E1.
- Fire resistance: Class F1.
- Transportation or installation restrictions: Submit proposals.

315 MANUFACTURER'S INFORMATION

- General arrangement drawings: Submit fully dimensioned and detailed general arrangement drawings including:
  - Weight of core and winding assembly.
  - Weight of enclosure.
  - Total weight.
  - Base details.
  - Cable box details.
  - Rating and connection plate details.
  - Arrangement and connection drawings for ancillary equipment.
- Transformer ancillary equipment: Submit manufacturer's literature.
- Type test certificates: Submit. Include:
  - Temperature rise.
  - Lightning impulse.
  - Partial discharge.
  - Sound level.

320 TRANSFORMER COOLING

- Cooling medium: Air (A)
  - Circulation method: Natural (N)

325 RATED POWER

- Rated apparent power: as drawings.
- Enhanced rating with additional cooling: not required.

2900 -EXT, EC Specification

330A EARTHING step-up

- High voltage system earthing: star point - Via NER panel.
- Low voltage system earthing: LV Delta winding - casing to LV systems earth Bar.

330B EARTHING Step Down

- High voltage system earthing: MV Delta winding - Casing to MV earth Bar.
- Low voltage system earthing: Star Point

335A VOLTAGE RATIO AT PRINCIPLE TAPPING Step-up

- Primary winding/ secondary winding: 400/11000.

335B VOLTAGE RATIO AT PRINCIPLE TAPPING step-down

- Primary winding/ secondary winding: 11000:400.

350A CONNECTION AND PHASE DISPLACEMENT step-up

- Vector group to BS EN 60076-1: Ynd11.

350B CONNECTION AND PHASE DISPLACEMENT step-down

- Vector group to BS EN 60076-1: Dyn11.

355 PRIMARY VOLTAGE TAPPINGS

- Sizes: ±2.5%

363 TRANSFORMER ACCESSORIES

- Accessories:
  - Bi-directional rollers;
  - Earthing boss tapped M12;
  - Lifting lugs;
  - Lockable auxiliary marshalling box fully cabled from each transformer auxiliary device to fixed & labelled terminals; and
  - Pulling eyes.

365A ENCLOSURE step-up

- Ingress protection to BS 60529: IP44
- Material and construction: Welded mild steel fabricated to prevent distortion when the transformer and enclosure is lifted or transported.
  - Finish: Manufacturer's standard
- Accessible interior and feeder circuit breaker: Not required.
  - Door interlocks: Prevent enclosure doors being opened while circuit breakers are closed.
    Interlocking: Captive key exchange type with square faced key and alphabetical or numerical coded operating face.
- Cable gland plates: High voltage
  - Type: Manufacturer's standard
- Anti-condensation heaters with thermostatic control: Required .
  - Type: Manufacturer's standard
- Forced ventilation fans: Not required
  - Type: Manufacturer's standard .
  - Controls: Manufacturer's standard .

365B ENCLOSURE step down

- Ingress protection to BS 60529: IP44
- Material and construction: Welded mild steel fabricated to prevent distortion when the transformer and enclosure is lifted or transported.
  - Finish: Manufacturer's standard
- Accessible interior and feeder circuit breaker: Not required.
  - Door interlocks: Prevent enclosure doors being opened while circuit breakers are closed.
    Interlocking: Captive key exchange type with square faced key and alphabetical or numerical coded operating face.
- Cable gland plates: High voltage and Low voltage

- Type: Manufacturer's standard
- Anti-condensation heaters with thermostatic control: Required .
  - Type: Manufacturer's standard
- Forced ventilation fans: Not required
  - Type: Manufacturer's standard .
  - Controls: Manufacturer's standard .

367 INDICATORS AND ALARMS

- Thermal protection: Required.
  - Type: Manufacturer's standard.
- Dial type winding temperature indicator: Required.
- Digital type winding temperature indicator: Required.
- Local audible alarm systems: Minimum 65 dBA sounder with xenon flashing beacon

370 NOISE EMISSION CONTROL

- Sound pressure level (maximum): 50 dB(A) at 1m
- Anti-vibration mountings: Required

375 HIGH VOLTAGE AND LOW VOLTAGE CABLE TERMINATIONS

- Position: to suit installations
- Cable terminations: High voltage required and Low voltage required.
  - Cables: High voltage as section V24 and Low voltage as section V32.

380 HIGH VOLTAGE CONNECTION ARRANGEMENT

- Cable entry: to suit installation.
- Type of enclosure: to suit installation

390 LOW VOLTAGE CONNECTION ARRANGEMENT

- Cable entry: to suit installation.
- Type of enclosure: to suit installation.

400 FACTORY INSPECTIONS

- Notice before inspections: 14 days .
- Testing: In accordance with BS EN 60076-11.
  - Routine Tests: Undertake.
  - Type Tests: Required
  - Special Tests: none
- Test equipment calibration certificates: Submit.
- Witnessing: Arrange for factory testing to be witnessed by the contract administrator and 3 colleagues.
- Test report: Submit.

EXECUTION

610 INSTALLATION GENERALLY

- Transportation, off-load and installation: Submit method statement.
- Assembly: Replace fittings removed for transport.

620 INSTALLING CONTROLS, INDICATORS AND ALARMS

- Controls indicators and alarms: Connect to marshalling box.
- Marshalling box location: Mounted on enclosure

COMPLETION

910 CLEANING AND GENERAL INSPECTION

- Dust and debris: Remove.
- Enclosure: Inspect.
- Windings: Inspect.
- Temperature sensor probes: Inspect.
- Forced cooling system: Inspect.
- Anti-condensation heating system: Inspect.
- Labelling: Verify.
- Transformer and enclosure earthing: Verify.
- Cables terminations: Inspect.
- Reports: Submit.

915 LABELLING

- Rating plate: In accordance with BS EN 60076-11.
- Identification label:: reference No

920 TESTING AND COMMISSIONING

- Method statement: Submit.
- Insulation resistance tests: Carry out for:
  - High voltage winding to earth (1000 V d.c.).
  - Low voltage winding to earth (500 V d.c.).
  - High voltage winding to low voltage winding (1000 V d.c.).
  - Ancillary trip and alarm wiring with any fuses and remote connections removed (500 V d.c.).
  - Cooling fan motors (500 V d.c.).
  - Anti-condensation heaters (500 V d.c.).
- Operation of alarm and trip devices: Check and verify.
- Cooling fan motors thermal overloads: Check and confirm correct operation.
- Forced cooling temperature controls: Check and confirm correct operation.
- Anti-condensation heaters: Check and confirm correct operation.
- Tap change links: Set on the principle setting.
- Enclosure access interlocks: Check and confirm correct operation.

930 PADLOCKS AND KEYS

- Locking mechanism: Five lever.
- Material: Brass.
- Quantity: Submit proposals.
- Padlock keys: Two for each padlock.
- Padlock identification: Stamp padlock describing its function.

940 DOCUMENTATION

- Operation and maintenance instructions: Submit.
- Record drawings: Submit.

945 SPARES AND CONSUMABLES

- Filters for cooling system: Two sets

V24 High voltage cabling

To be read with Preliminaries/ General conditions

PRODUCTS

310A HIGH VOLTAGE CABLES GENERALLY

- Materials:
  - Underground cable networks for housing developments: In accordance with ENA ER G81-2.
  - 11 kV, underground industrial and commercial connections: In accordance with ENA ER G81-5.
- Bonds electrical power cable terminations: To BS 7197.
- Proposed high voltage cables: Submit drawings, technical information, calculations and manufacturer's literature.
- Spare capacity (percentage of current carrying capacity): 25%.

330 THERMOSETTING INSULATION CABLES

- Standard: To BS 6622.
- Manufacturer: Submit proposals.
  - Product reference: Submit proposals.
- Voltage designation: 11 kV.
- System category: A.
- Number of cores: 3.
- Conductor: Stranded copper.
- Insulation: Cross linked polyethylene (XLPE).
- Screen: Not required.
- Armour material: Galvanized steel.
- Oversheath: Polyvinyl chloride (PVC).
  - Thickness: Submit proposals.
  - Colour: Red.
- Semi-conducting layer on oversheath: Not required .

340 LOW SMOKE THERMOSETTING INSULATION CABLES

- Standard: To BS 7835.
- Manufacturer: Submit proposals.
  - Product reference: Submit proposals.
- Voltage designation: 11 kV.
- System category: A.
- Number of cores: 3.
- Conductor:
  - Material: Copper.
  - Type: Stranded.
- Insulation: Cross linked polyethylene (XLPE).
- Protection: Armoured.

360 HIGH VOLTAGE CABLE TERMINATIONS

- Impregnated paper insulation cables: To BS 7888-4.2.
  - Type: Submit proposals.
- Extruded insulation cables: To BS 7888-4.1.
  - Indoor: Submit proposals.
  - Outdoor: Submit proposals.

370 UNDERGROUND PLASTICS CABLE PROTECTION COVERS

- Manufacturer: Submit proposals.
  - Product reference: Submit proposals.
- Material: Polyethylene.
- Size:
  - Length: Submit proposals.
  - Width: 150 mm.
  - Thickness: 18 mm.
- Jointing method: Peg.
- Identification: Laminate underground cable marker tape to top face.

390A EARTHENWARE DUCTS FOR UNDERGROUND CABLES .

- Manufacturer: Submit proposals.
  - Product reference: Submit proposals.
- Accessories: Proprietary duct plugs.

400 PROTECTION TAPES FOR BURIED ELECTRICITY SUPPLY CABLE

- Standard: To ENA TS 12-23.
- Manufacturer: Submit proposals.
  - Product reference: Submit proposals.

410 MANHOLES

- Access chambers: Submit proposals.
- Inspection chambers: Submit proposals.

EXECUTION

610 INSTALLING HIGH VOLTAGE CABLES

- Underground cable networks for housing developments: In accordance with ENA ER G81-3.
- 11 kV underground industrial and commercial connections: In accordance with ENA ER G81-6.
- Execution: Controlled by authorized persons and undertaken by competent persons.
  - Evidence of authorization: Submit.
  - Evidence of competence: Submit.
  - Permit to work procedure and method statements: Submit.
- Preparation: Store cables above 5°C for 24 h before installation.
- Installation temperature (minimum): 5°C.
- Cables: Install in one length.
- Cable pulling: Do not overstress. Prevent kinks and twisting of the cable.
  - Installation method: Submit proposals.

620 EXCAVATIONS

- Excavations next to existing underground services: In accordance with HS(G) 47.
  - Method statement: Submit.
- Existing underground services: Expose and identify.

635 INSTALLING THERMOSETTING INSULATION CABLES

- Installation: In accordance with BS 6622 Appendix C.
- Stress relief: Slide semi-conducting sleeve over exposed insulation.

640 INSTALLING LOW SMOKE THERMOSETTING INSULATION CABLES

- Installation: In accordance with BS 7835 Appendix C.
- Stress relief: Slide semi-conducting sleeve over exposed insulation.

650A CABLES IN TRENCHES

- Base: Newly prepared bedding.
  - Material: Sand.
- Multiple cables in same trench: Set 250 mm apart.
  - Cable formation within trench: Flat.
- Manholes: Provide manholes, draw pits and jointing chambers.
- Cables below roads and hard standings: Duct and derate if longer than 10 m. Extend ducts 1 m beyond hard standing.
- Cable identification and protection: Underground Marker tape and flush cable plaques.

660A INSTALLING CABLE DUCTS.

- Location and colour coding: In accordance with NJUG Volume 1 'Guidelines on the positioning and colour coding of underground utilities' apparatus'.
- Duct formation within trench: flat at 300mm centres.
- Gradient (maximum): 1:20.
- Duct bends: Suitable for cable bending radii.
- Manholes: Provide manholes, draw pits and jointing chambers.
- Duct alignment: Check before installing cables.
- Duct cleaning: Clean duct run before installing cables.
- Draw ropes: Install draw ropes in ducts.
  - Type: Corrosion resistant, minimum breaking strength 550 N.
- Duct ends: Plug and seal with proprietary duct plugs.

670 CABLES IN DUCTS

- Cable installation from cable drums: Submit method statement.

680 PROTECTION TAPE FOR BURIED ELECTRICITY SUPPLY CABLE

- Installation: In accordance with ENA TS 12-23.

690A INSTALLING HIGH VOLTAGE CABLE JOINTS

cable joints shall be avoided wherever possible

- Straight cable length before and after joint (minimum): 1 m.
- Spacing between joints (minimum): 2 m.
- Joint identification: Label as follows:
  - Date installed.
  - Board's name.
  - Circuit reference.
  - Cable type and size.

COMPLETION

910 CABLE TESTING AND INSPECTION

- Cleating and bending radii of cables: Verify and confirm that they are in accordance with manufacturer's recommendations.
- Cable terminations: Verify and confirm that they are in accordance with manufacturer's recommendations.
- Continuity and polarity: Verify.
- Insulation test: Submit results.
- Sheath test: Submit results.
- Pressure test:
  - Paper insulated cables: To BS 6480.
  - Thermosetting insulation cables: To BS 6622.
  - Results: Submit.

920 DOCUMENTATION

- Record drawings: Submit, showing cable types, sizes, routes and depths, duct sizes and lengths, joint locations, joint and service phasing.

Specification Check / Revision Sheet

Project	**RHSC and DCN Edinburgh Hospitals**	Project Number	**G1547**
Service (s)	**Mechanical & Electrical**	Sheet	**WW AP.1.2.24 JB G1547**
Performance Specification Title	**Uninterruptable Power Supplies**	Date	**August 2014**
Prepared By	**JB**	Checked By	**PM**

Revision Ref.	Date of Revision	Page N$^{o(s).}$	Revision Details	Checked By
FT	December 2013	All	Final Tender	PM
FC	July 2014	All	Update for Financial Close	JB
FC	August 2014	All	Comments Incorporated	JB

RHSC and DCN EDINBURGH
UNINTERRUPTIBLE POWER SUPPLIES SPECIFICATION

CONTENTS

1.0 GENERAL INTRODUCTION

2.0 SCOPE

3.0 INTERFACES AND DEMARCATIONS

4.0 APPLICABLE STANDARDS

5.0 DESIGN CRITERIA

6.0 LIAISON

7.0 UNINTERRUPTIBLE POWER SUPPLIES

MATERIALS AND WORKMANSHIP CLAUSES

V44 Uninterruptible Power Supplies

1.0 GENERAL INTRODUCTION

Purpose of Document

The manufacture, supply, installation, wiring, connecting, setting to work and commissioning of the works described in this document.

This specification relates to the Low Voltage Distribution system serving the RHSC-DCN Building and the associated Energy Centre

This specification shall be read in conjunction with all other mechanical and electrical engineering services specifications and the Architectural drawings.

Description of Project

The new facility shall re-provide services from the Royal Hospital for Sick Children, Child and Adolescent Mental Health Service and the Department of Clinical Neurosciences in a single building adjoining the Royal Infirmary of Edinburgh at Little France.

The DCN part of the Facilities will have a physical link with the existing RIE Facilities specifically with the critical care unit.

The building is generally constructed from reinforced concrete.

The basement houses FM support facilities and the main building services heat distribution centres and electrical plant rooms.

Ventilation plantrooms are generally located at roof level and level 2.

A central Energy Centre shall be provided to the South of the hospital housing heating, CHP, standby generation, fuel storage and utility incomers.

2.0 SCOPE

The scope of work covered by this Specification shall include, but not be limited to the following:-

- Uninterruptible Power Supply Systems supporting the main core server room.
- Uninterruptible Power Supply Systems supporting clinical areas with isolated power supply (IPS) systems.
- Switchboards on the output side of the UPS, complete with interlocking arrangements.

3.0 INTERFACES AND DEMARCATIONS

The UPS systems shall be integrated with a host Internet Protocol network which will support communication, interaction, data transfer and data retrieval from and between the various engineering systems in the building. The UPS systems shall be connected to the host network via gateways. The Building Management System (BMS) will be provided with a Graphical User Interface which will permit the interrogation of the UPS systems down to component level. It is not intended that the BMS will control the system but rather will monitor component status and provide fault alarm indication at the Graphical User Interface.

4.0 APPLICABLE STANDARDS

All elements of the works shall be designed in accordance with the requirements of current legislation, regulations and standards stated in the Materials & Workmanship clauses.

5.0 DESIGN CRITERIA

Electricity Supply Characteristics

LV power characteristics: 400/230 V, 3-phase, 50 Hz, 230 V, 1-phase, 50 Hz.

6.0 LIAISON

Project Co. shall include for liaison with:-

Health and Safety Professionals. As well as the Health and Safety requirements of this specification, Project Co. shall include for close liaison with Health and Safety professionals including the Hospital's Health and Safety Advisors and the CDM Co-ordinator and shall comply with the CDM Regulations and all Health and Safety regulations.

The Hospital. Project Co. shall include for liaison in conjunction with the Board with members of the Hospital's team with an interest in the planning and administration of the UPS systems.

Building Control. Project Co. shall liaise, with and adhere to, the requirements of the Building Control Officer.

Any other member of the Project and Board teams concerned with the planning and administration of UPS systems.

7.0 UNINTERRUPTIBLE POWER SUPPLIES (UPS)

7.1 General

UPS shall be provided to serve the loads as follows:-

- Main core server room
- Isolated Power Supplies (IPS) serving theatres
- IPS serving areas other than theatres

The battery autonomy for each of the above areas is described in section V44, clauses 350A, 350B and 350C below.

The kW or kVA ratings of the batteries shall be indicated on schematic drawings. ’s attention is drawn to the need to size UPS systems not on kVA but on kW (to cater for a power factor range).

7.2 Available Space and Intended Cooling

Accommodation for the UPS equipment and batteries is limited, and it is imperative that the UPS Installer checks that the offered apparatus/enclosures will fit into the rooms and spaces allowed for them, with ample space for access, operations and maintenance. The UPS equipment will be located in dedicated rooms within plantroom spaces, and it must be assumed that significant volumes of mechanical equipment and associated access space will prevent the allocation of additional space to UPS equipment.

Project Co. shall request guaranteed limits for the heat losses which may be expected from the offered UPS equipment, against which the intended mechanical cooling duty for each UPS Room can be checked. For each UPS unit, losses shall be declared for load conditions of 25%, 30%, 40%, 50%, 60%, 70%, 80%, 90% & 100% of the full rating, and the declared figures shall be inclusive of transformer losses (if transformers are included in the UPS scheme design).

The following graph details the minimum design efficiencies for the UPS system (including transformer). Note that the UPS system efficiencies are shown on the y-axis and the % load on the x-axis.

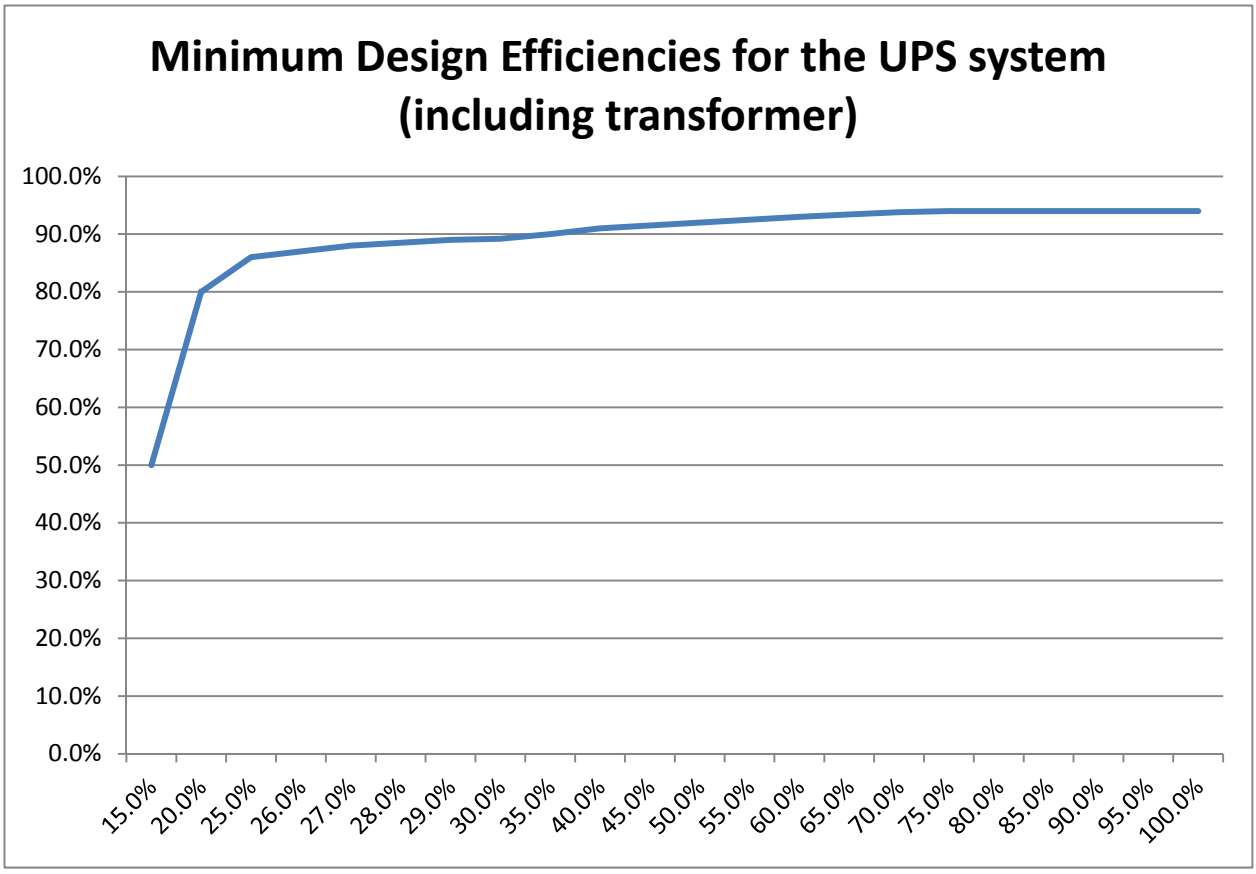
Minimum Design Efficiencies for the UPS system (including transformer)
100.0%
90.0%
80.0%
70.0%
60.0%
50.0%
40.0%
30.0%
20.0%
10.0%
0.0%
15.0%
20.0%
25.0%
26.0%
27.0%
28.0%
29.0%
30.0%
35.0%
40.0%
45.0%
50.0%
55.0%
60.0%
65.0%
70.0%
75.0%
80.0%
85.0%
90.0%
95.0%
100.0%

7.3 Configuration

7.3.1 General

The UPS shall provide a no-break supply during loss of normal mains power supply and subsequent emergency generator power supply. The UPS System shall be of modular parallel design and will have N+1 redundancy.

Uninterruptible Power Supplies (UPS) shall be provided to serve life-support equipment within area and rooms listed in the table below in accordance with SHTM 06-01 Electrical Services.

UPS Required Table

Level	**Area**	**Rooms**
Basement		
Ground Floor	Emergency Department Co-Joined Radiology	Resuscitation Room(s) 4 Major Treatment Rooms MRI Rooms CT Rooms Gamma Camera Rooms Control Rooms
First Floor	Co-Joined Theatres Critical Care DCN Acute Care	9 Theatres and anaesthetic rooms MRI Room Angiogram Interventional Room Recovery Spaces 24 Cubicle Spaces Receiving / Resuscitation Room
Second Floor	Ehealth	Ehealth Server Room's ventilation/cooling
Third Floor	Medical In-Patients	Transitional Care Rooms
Fourth Floor/Roof	Helipad	Helipad RFFS Accommodation Helipad Fire Suppression System

7.3.2 Battery/Autonomy

Batteries shall be to BS EN 60896 Parts 21 & 22, and shall be selected to provide a design life no less than 10 years.

It is intended that the temperature of the UPS room/battery room be normally between 21ºC+/-2ºC and the required battery performance/autonomy shall be offered against this parameter.

The three UPS units shall be compiled in N+1 configuration, each UPS battery shall be selected to provide an autonomy of 40 minutes which shall allow a full load autonomy at design load of 60 minutes when all three units are in operation.

The individual UPS battery autonomies shall be indicated in Section V44, clauses 350A, 350B & 350C, or on the issued drawings.

7.3.3 Output Neutral reference

The UPS output neutral point shall remain referenced to earth potential under all service scenarios.

7.3.4 Static Switch

A solid-state bypass switch (static switch) shall be incorporated in the UPS design to allow rapid transition to an internal bypass line in the event that an overload or fault condition arises which might damage the UPS inverter.

7.3.5 UPS Switching & Related Control

Each UPS shall include switches to facilitate the complete isolation of each individual UPS, for testing and maintenance. Thus moulded case circuit breakers or isolation switches shall be provided on the input, output and static switch supply of each UPS, and a further switch shall be installed to serve as an internal bypass.

Notwithstanding anything described elsewhere, the UPS shall be fitted with control & interlock features to safeguard the UPS during all conditions of current sharing whilst in parallel and against incorrectly sequenced operation of static switch and bypass switch.

- all inverters within a UPS combination will have a control link to facilitate synchronization, master/slave assignment, and current sharing when in parallel,
- The group will have on its internal bypass switch an early-make late-break auxiliary contact to force closure of the static switch in case a bypass operation was being attempted on the switch without having first activated the static switch.
- The group will additionally have on its internal bypass switch a solenoid release mechanism arranged to release a key (Castell, Ronis or other equal and approved type) which may be used in conjunction with interlocking arrangements on the external (‘wrap-around’) bypass switch, to ensure that the external bypass can be applied only after the internal bypass switch is closed. Other means of achieving the same function may be proposed.

7.3.6 Other Features

Each UPS shall include in the battery charging circuits a facility for temperature compensation of the charging current against temperature measured at the batteries themselves, such temperature measurement envisaged as being obtained from thermocouples fitted to the battery casings.

Each UPS shall include all facilities to allow remote monitoring by means of a telephone or data line connection. The UPS units shall incorporate communication circuits, data encoder, auto-dialler/modem etc. to permit transmission of fault reports to a remote location and allow periodic or on-demand interrogation of the UPS for information on operating status, load readings, alarm and operator logs, and to permit the initiation of diagnostic tests and transmission of results. It shall be possible to assign hierarchical passwords to such remote access and to the running of diagnostics. No settings need be adjusted remotely.

The UPS system shall be supplied and installed complete with remote alarm indicators for the benefit of User Department staff. In all cases, local controls shall permit silencing of an alarm buzzer and selecting/scrolling through the displayed information, but the UPS units shall not be operated in any way from the remote panels.

- In the case of clinical area (theatre), the remote indication shall be provided straight into (and shall be interfaced to suit) the Surgeon's Panel in all operating theatre(s). The output data shall be configurable to display status/alarms as the surgeons may require, but is envisaged as providing :

  - Indications of
    - UPS system healthy and running on three UPS units
    - UPS system operational but running on two UPS units only,
  - Alarm signals for
    - UPS bypassed – output on mains supply
    - Mains fail – UPS output derived from battery,
    - UPS alarm – general,
    - UPS alarm – battery low,
    - UPS alarm – shutdown imminent.

- In the case of clinical area (non-theatre) areas, the remote indication shall be provided at a number of simple remote alarm/indication panels located in the respective User Areas. No objection will be taken to the UPS remote alarms and the Isolated Power Supply (IPS) remote alarms [specified elsewhere, for other specialist] being combined into one alarm/indicator panel in each User Area. The signals will be confirmed later, but are expected to comprise :

  - Indications of
    - UPS system healthy and running on three UPS units
    - UPS system operational but running on two UPS units only,
  - Alarm signals for
    - UPS bypassed – output on mains supply
    - UPS alarm/fault.

- The UPS shall interface with the BMS and provide the following:
  - o Indications of
    - UPS system healthy and running on three UPS units
    - UPS system operational but running on two UPS units only,
  - o Alarm signals for
    - Mains fail – UPS output derived from battery,
    - UPS alarm – general,

- Although not a function of the UPS equipment itself, information about the incoming supply conditions (switch status) shall be communicated from the main LV switchboards to the Electrical Network Management System (ENMS). See Appendix B.

7.4 Switchboards

7.4.1 General

Power cabling is covered under the distribution specification.

7.4.2 Input & Output Switchboards

Switchboards shall be constructed to the standards set out in Low Voltage Distribution specification WW.A.P.1.2.20. They shall unless otherwise stipulated be Form 4 Type 2.

The Input and Output Switchboard requirements are indicated schematically on the issued drawings.

On the Input and Output Switchboards, each incomer circuit shall be equipped with a voltmeter and selector switch (to permit local indication of the 3 phase-to-neutral voltages and the 3 line-to-line voltages).

The Output switchboards shall include an interlocking scheme arranged to prevent damage to the UPS equipment when being switched by an Operator into or out of bypass condition or parallel condition. Electrical or mechanical interlocking may be offered, but mechanical interlocking is preferred.

Note that interlocking is not provided to prevent the load being switched off, it is provided to safeguard the equipment and provide some assurance to the operator that he will be prevented from doing damage to the UPS units whilst permitting him to use bypass conditions and paralleling/breaking parallel to keep the loads energised. may modify these as appropriate for the selected equipment.

- During normal operation, and all reasonable switching sequences, it should be possible to keep the load energized (accepting that the load may receive raw mains during switching operations if these involve bypassing the UPS). Reasonable switching sequences are those intended to take a UPS out of service for maintenance or restore it to service after maintenance, or to configure the UPS units for parallel or solo operation (if applicable),
- An internal bypass of a UPS is assumed to require activating the static bypass switch and then operating the internal maintenance bypass switch,

- Putting a UPS system into 'wrap-around Bypass' condition is assumed to require operating first the static switch, then the internal bypass switch, which will force the remaining two UPS units into by-pass and then operating the external bypass switch(es).
- It should not be possible to switch a UPS onto a busbar unless
  - o that busbar is initially de-energised, or
  - o if the busbar is live, unless
    - the UPS is selected for internal bypass and the busbar is already energised via that UPS's wrap-around bypass, or
    - the UPS is selected for internal bypass and the bar is already energised via the other UPS which is itself selected for internal bypass
- There should be no interlocking constraint as to order of switching (or on which switch parallel is made or broken) providing all other conditions are met.

No interlocks need be provided on the Input Switchboard, as the Operator can be expected to follow switching instructions for bypass & paralleling on only the downstream side of the UPS, and he may be expected to check the voltmeter readings for assurance that all incoming supplies are available before he switches.

7.4.3 "Wrap Around" Bypass

The UPS System shall be provided with an external wrap-around maintenance bypass facility which shall render the UPS entirely safe for maintenance and trouble shooting to the extent that a complete UPS unit can be 'swapped out' if necessary.

As described in the previous section, interlocking devices shall be provided to ensure that the load is transferred from UPS to mains, or vice versa, in a controlled manner. The supply shall not be interrupted during the transfer. The UPS shall not be damaged by back-feeding from maintenance bypass supply with the UPS output terminals.

7.5 Operation on System Healthy

The load shall be equally shared between each UPS of a paralleled group.

On reinstatement of power after a period of power failure the UPS units shall protect the load and the batteries shall be recharged. The UPS shall be capable of limiting the recharge current such that the value of the load plus the recharge current does not exceed the rating of the supply circuit breakers. As described under UPS features, section 7.3.6, the charging circuits shall include a temperature compensation feature which optimizes the charging current according to the measured temperature of the battery.

7.6 Operation on Failure of One UPS

The total load shall be transferred to the healthy UPS units. In the case of paralleled UPS units, the communication/control link shall permit the failed UPS to block its inverter output and the healthy UPS units to take over the whole of the load. (It will be permissible for all UPS units to enter static bypass condition for a short period, should this be necessary as part of the process).

The UPS system will provide the stated autonomy at full design load in its normal operative state. If a UPS unit fails or is being maintained and the supply to the healthy UPS unit fails then the UPS system will provide 66% of the autonomy at full design load. The design does not allow for two concurrent failures by design and this is considered to be a failure upon failure scenario. This is in accordance with SHTM 06-01 clause 10.7 which permits a reduced battery autonomy when one of the UPS units is not available.

7.7 Software

Open protocol industry standard software must be used. All software shall be 'backwards compatible'.

V44 Uninterruptible power supplies

To be read with Preliminaries/ General Conditions

PRODUCTS

310 UNINTERRUPTIBLE POWER SUPPLY (UPS) EQUIPMENT (THREE-PHASE)

- Standards: To BS EN 62040-1 and -3. Submit certification.
- Type: On-line.
- Manufacturer: Board's choice.
  - Product reference: Board's choice – subject to Technical Approval.
- Configuration: Parallel redundant (n+1) with bypass for UPS units.
  - External input and output isolators for each unit: Required.
- Service conditions: Site specific.
- Input power supply: 400V ac.
- Maintenance bypass: External fully interlocked
- Galvanic separation between input and output: Not specifically required, but output side neutral shall remain referenced to / connected to earth for all operating conditions (Board to submit proposals).
- Rated output apparent power (batteries): As detailed on UPS schematic.
- Overload capability: 125% for 10 minutes, 150% for 1 minute and 200% for 100milliseconds.
- Voltage: Three phase and neutral 400 V a.c. ±2%.
  - Voltage waveform: Sinusoidal.
    Total harmonic distortion: Less than 5%.
    Even harmonic distortion: Less than 1%.
- Frequency: 50 Hz ±2%.
- Output power factor: 0.9.
- Batteries: Required, and with 10 year life assuming 20°C environment.
  - Arrangement: Within UPS equipment enclosure or on separate free-standing multi-tiered racking (no more than 4 tiers high).
  - Recharge time:
    To 80% capacity: Manufacturer's standard.
    To 100% capacity: Manufacturer's standard
  - Battery monitors: Required.
- Re-charging regimes: Manufacturer's recommended charging method, but including temperature compensation for variation in battery temperature.
- Generated harmonic distortion at point of incoming supply: In accordance with ENA
- Engineering Recommendation G5/4-1.
  - Evidence of compliance: Submit evidence for 25%, 50%, 75%, and 100% load, with declarations for harmonic current for all harmonics to 25th, and odd harmonics from 27th to 49th.
- Controls, indicators and alarms: Manufacturer's standard.
- Enclosure: Manufacturer's standard.
- Factory tests: Required.

320 SITE SPECIFIC SERVICE CONDITIONS

- Altitude: Less than 1000 m above sea level
- Environmental conditions: Normal indoor.

340 MANUFACTURER'S INFORMATION

- General arrangement drawings: Submit fully dimensioned and detailed general arrangement drawings including:
  - Confirmation that equipment fits in available (allocated) UPS Rooms.
  - Weight of each UPS unit.
  - Total weight of complete UPS assembly (with batteries if integrated).
  - Weight of separate battery (including enclosure or racks).
  - Rating and connection plate details.
  - Enclosure base details.
  - Arrangement and connection drawings for ancillary equipment.
- Batteries:
  - Submit design life details to confirm no less than 10 years for a 20°C environment.
  - Submit service life details assuming battery environment is controlled to 25 +/-1°C.
- Type test certificates: Submit details including:
  - Temperature rise.
  - Sound level in normal mode.
  - Sound level in battery mode.
  - Rated input current.
  - Maximum continuous input current (curve of current against time).
  - Inrush current expressed as a percentage of normal rated current.
  - Harmonics: Full details of input current harmonic distortion at 25%, 50%, 75% and 100% load.
  - Overall efficiency: Submit details at 25%, 50%, 75% and 100% load
  - Heat losses: Submit maximum loss details at 25%, 30%, 40%, 50%, 60%, 70%, 80%, 90% and 100% of rated capacity.
- Mean time between failures: Submit details.

350 BATTERIES FOR UPS

- Type: Lead-acid valve regulated (VRLA) to BS 6290-4, BS EN 60896-21 and BS EN 61056-1
- Voltage: Board's choice
- Battery autonomy (stored energy time at rated power): UPS SHALL BE CONFIGURED AS INDEPENDENT BUT SYNCHRONISED UNITS. EACH INDIVIDUAL UPS SHALL HAVE A BATTERY WITH AUTONOMY OF 40 minutes (giving a total system autonomy of 60 minutes).
- Fused parallel battery strings: Two (minimum).
  - Automatic disconnection of a faulty string: Required
- Impact resistant plastic shields to intercell terminal and output terminals: Required.
- Battery supply d.c. circuit breaker with overload and short circuit protection: Required.
- Ripple free battery charger with automatic temperature and float voltage compensation: Required.
- Battery recharge time: As manufacturer's recommendations

360 BATTERY MONITORS

- Type: Microprocessor based.
- Manufacturer: Board's choice.
  - Product reference: Board's choice.

- Features:
  - Automatic battery discharge test at adjustable time intervals;
  - Battery voltage;
  - Detection of faulty battery;
  - Detection of excessive temperature;
  - Estimated remaining battery service life; and
  - Standby time remaining

365 BATTERY SHELVING RACKS

- Type: Free standing.
- Complete with cladding to form cabinets
- Manufacturer: Board's choice.
  - Product reference: Board's choice.

370 CONTROLS, INDICATORS AND ALARMS

- Indicator type: LCD display.
- Controls:
  - Automatic/ manual;
  - Display select button; and
  - On/ off/ bypass.
- Display:
  - Readings:
  - Battery voltage;
  - Input voltage;
  - Output voltage;
  - Input frequency;
  - Output frequency;
  - Input current;
  - Output current;
  - Output load kW; and
  - Output power factor.
  - Status indicators:
  - Battery operation;
  - End of autonomy;
  - Load on bypass;
  - Mains healthy;
  - Mains failed;
  - Normal operation; and
  - Time of load on battery autonomy.
  - Faults: Supply voltage and frequency faults.
  - Alarms: Required.
- Local audible alarm systems: Minimum 65 dBA sounder with xenon flashing beacon

380 CUSTOM ENCLOSURES

- Minimum degree of protection to BS EN 60529: IP31
- Material and construction: Welded mild steel. Assemble to prevent distortion when the complete enclosure is lifted or transported.
- Finish: Manufacturer's standard
- Lockable access doors: Required.
- Cable entry with removable gland plates: For top entry cables
  - Type: Manufacturer's standard

- Duplicate forced ventilation fans: Required.
  - Type: Manufacturer's standard.
  - Controls: Manufacturer's standard.
  - Fan failure alarms: Local and Remote
- Noise emission:
  - Sound pressure level in normal mode (maximum): Refer to Acoustic Strategy for limits
  - Sound pressure level in battery mode (maximum): Refer to Acoustic Strategy for limits
  - Anti-vibration mountings: Integral.

COMPLETION

910 CLEANING AND GENERAL INSPECTION

- Dust and debris: Remove.
- Enclosures: Inspect.
- Earthing: Verify.
- Cable terminations: Inspect.
- Inspection report: Submit.

915 LABELLING

- Identification label: Required.

920 TESTING AND COMMISSIONING

- Method statement: Submit.
- Phase rotation: Verify.
- Emergency and safety circuits: Check.
- Correct operation of alarms and controls: Confirm.
- Insulation resistance tests: Test interconnecting cables and test forced cooling fan motors.
- Type Tests: Perform all tests in accordance with BS EN 62040-3 Table 3.
- Routine Tests: In accordance with BS EN 62040-3 Table 4, perform the following.
  - Operational tests:
  - a.c. input failure test;
  - a.c. input return test;
  - Rated stored energy time test;
  - Simulation of parallel redundant UPS fault test;
  - Synchronization test;
  - Transfer test;
  - UPS auxiliary devices test.
  - Output tests:
  - Harmonic components measurement;
  - Load tests:
  - Light load test;
  - Full load test.
  - Standby generator compatibility tests: Required

940 DOCUMENTATION

- Operation and maintenance instructions, record drawings & test/commissioning certificates to be compatible with the proposed document management system
- Operation and maintenance instructions: Submit.
- Record drawings: Submit.
  Test certificates: submit
  System certification: submit

Specification Check / Revision Sheet

Project	**RHSC and DCN Edinburgh Hospitals**	Project Number	**G1547**
Service (s)	**Mechanical & Electrical**	Sheet	**WW AP.1.2.25 JB G1547**
Performance Specification Title	**Earthing and Bonding**	Date	**August 2014**
Prepared By	**JB**	Checked By	**PM**

Revision Ref.	Date of Revision	Page N$^{o(s).}$	Revision Details	Checked By
FT	December 2013	All	Final Tender	PM
FC	July 2014	All	Update for Financial Close	JB
FC	August 2014	All	Comments Incorporated	JB

RHSC and DCN EDINBURGH
EARTHING & BONDING

CONTENTS

1.0	**GENERAL INTRODUCTION**
2.0	**SCOPE**
3.0	**SPECIFIC EXCLUSIONS**
4.0	**INTERFACES AND DEMARCATIONS**
5.0	**APPLICABLE STANDARDS**
6.0	**LIAISON**
7.0	**EARTHING & BONDING SYSTEM**

MATERIALS AND WORKMANSHIP CLAUSES

V81	**Earthing and bonding system**

1.0 GENERAL INTRODUCTION

Purpose of Document

The manufacture, supply, installation, wiring, connecting, setting to work and commissioning of the works described in this document.

This specification relates to the Low Voltage Distribution system serving the RHSC-DCN Building and the associated Energy Centre.

This specification shall be read in conjunction with all other mechanical and electrical engineering services specifications and the Architectural drawings.

Description of Project

The new facility shall re-provide services from the Royal Hospital for Sick Children, Child and Adolescent Mental Health Service and the Department of Clinical Neurosciences in a single building adjoining the Royal Infirmary of Edinburgh at Little France.

The DCN part of the Facilities will have a physical link with the existing RIE Facilities specifically with the critical care unit.

The building is generally constructed from reinforced concrete.

The basement houses FM support facilities and the main building services heat distribution centres and electrical plant rooms.

Ventilation plantrooms are generally located at roof level and level 2.

A central Energy Centre shall be provided to the South of the hospital housing heating, CHP, standby generation, fuel storage and utility incomers.

2.0 SCOPE

The scope of work covered by this Specification shall include, but not be limited to the following:-

- Earthing system generally
- Earth electrode system & installation
- Earthing of MV Network, Energy Centre & Generators
- Earthing of Substations
- Main equipotential bonding conductors
- Supplementary bonding conductors
- Neutral to earth point(s)
- Circuit protective conductors

- Conduits and conduit fixings
- Switch and riser cupboard earthing and bonding
- Server and hub rooms earthing and bonding (functional earth for comms/data)
- Imaging equipment earthing
- Earthing within MEIGaN areas
- High integrity earthing
- Cabling and containment earthing and bonding
- Earthing for Isolated Power Supplies
- Generator star point
- Earth resistor earthing
- Measurements & tests on the installed earthing system

3.0 SPECIFIC EXCLUSIONS

The following is specifically excluded from the scope of this Specification:-

- Earthing connections to specialist equipment.
- Earthing connections to lightning protection system.

4.0 INTERFACES AND DEMARCATIONS

Final connection of Earthing & Bonding systems to other systems (e.g. Imaging equipment, server racks, comms equipment, etc.) – schedule of responsibilities:-

- Imaging equipment final earthing connection to imaging Earth Reference Bar (ERB) provided by the Electrical Installer - by the Imaging Specialist.
- Server racks in server rooms and IT hub rooms connection to standard and separate (IT/instrument) earth bars provided by the Electrical Installer - by the IT System Specialist.
- Communication or other equipment requiring connection to a functional earth bar provided by the Electrical Installer – by the Specialist.

5.0 APPLICABLE STANDARDS

All elements of the works shall be designed in accordance with the requirements of current legislation, regulations and standards stated in the materials & workmanship clauses.

The Earthing & Bonding System shall be in accordance with;-

- The IET Wiring Regulations, BS7671 17th Edition;
- SHTM 06-01;
- The Medical Electrical Installation Guidance Notes (MEIGaN) v2.0 September 2007;
- Requirements of Scottish Power Energy Networks, should any arise;
- IEE Wiring Regulations Guidance Note 7;
- Electricity at Work Regulations;
- BS 7430 & BS EN 50310;
- ESI Engineering Recommendation S34

6.0 LIAISON

The Electrical Installer shall include for liaison with:-

Health and Safety Professionals. As well as the Health and Safety requirements of this specification, the Electrical Installer shall include for close liaison with Health and Safety professionals including the Hospital's Health and Safety Advisors and the CDM Co-ordinator and shall comply with the CDM Regulations and all Health and Safety regulations.

Other Specialist. The Electrical Installer shall liaise with other specialist's as necessary to ensure that all interfaces between the Earthing & Bonding System and other systems are allowed for.

Any other member of the Project and Hospital teams concerned with the planning and administration of the earthing and bonding system and policies.

7.0 EARTHING & BONDING SYSTEM

This section shall be read in conjunction with NBS clause V81 – Earthing and Bonding.

Earthing system generally

The whole of the electrical installation RHSC-DCN Building shall be effectively earthed and bonded to fully comply with the requirements of BS 7671 (17th Ed.), BS 7430 and MEIGaN v2.0 September 2007.

The entire earthing & bonding installation including switchboards, distribution boards, trunking, tray, ladder, basket tray, conduits, circuit protective conductors together with the metallic sheathing of cables shall be electrically continuous throughout forming a completely bonded system.

Earth electrode system & installation

An earthing system shall be installed to achieve a resistance to earth of less than one ohm. It is anticipated that the system will include connections to the building foundations. Where reinforced concrete foundations or piles are to be used as supplementary earth electrodes, connection to the re-bars shall be via a dedicated supplementary re-bar (minimum 12mm diameter) brought out through a connection box set into the concrete and at which connections to copper conductors/ strips can be made. The dedicated conductor re-bar shall be continuous (welded section to section if necessary) and shall be bound onto the structural re-bars.

The earth electrodes shall be solid high conductivity copper rods of 15 mm diameter, not less than 1.2 m long, be driven into the ground to a minimum depth of 2.4 m and be set out to meet the earth site and soil conditions. In addition, and where soil conditions allow such benefit, the electrodes may be buried lengths of high conductivity copper tape of size not less than 100mm x 3mm unless otherwise stated.

The earth electrodes shall be connected to form the earth network via high conductivity tape by means of a purpose made clamp below ground level in a proprietary brand of concrete inspection pit with a removable cover. A label shall be affixed within the inspection pit indicating the driven length of the earth electrode and its measured resistance value at time of test.

The high conductivity tape shall be installed in square and symmetrical lines with links provided in the tape system so that periodic tests may be carried out.

The earthing tape shall be LSOH sheathed or LSOH wrapped where run externally, through walls and floors or in situations where it may be liable to corrosion. PVC insulation may be used where copper tape is buried in the ground external to the building and where the use of such insulation contributes to the control of touch voltages or is required for separation reasons. Sheaths and wrappings shall be green and yellow. All insulated earthing tape when installed above ground or in floor trenches shall be secured at intervals not exceeding one metre by means of suitable saddles.

All joints in exposed sections shall be protected against moisture and corrosion by the application of two coats of anti-corrosion paint.

Each substation earth electrode system shall be bonded to the adjacent substation earth electrode system.

Earthing of MV Network, Energy Centre & Generators

The Energy Centre is to be provided with a MESH or common bonding network (CBN) for earthing of its electrical systems and for protection against the effects of lightning strikes. These systems shall be arranged such that multiple paths are provided to earth for all fault currents and over voltages.

The MV earthing systems to be provided principally comprise the Earth Electrodes (foundations, pits or ring conductors), Cables, Earth Bars and neutral Earthing panels indicated on the Drawings all designed/connected to safely conduct earth fault currents to the origin of the supply while the MV circuit protection recognises and clears the earth fault.

The CSA of the cables and earth bars will be as shown on the drawings.

The Generator Neutral Earth Panels shall be controlled to ensure:-

- that only one Generator neutral-earth connection is provided for all paralleled generators;
- the generator neutral is not earthed while the generators are paralleled with the Mains;

The Neutral Earthing Panel shall be automatically controlled by the Electrical Network Management System (ENMS).

Earthing of Substations

Refer to the earthing schematic for diagrammatic detail.

At each substation (11kV step down substation within the Hospital) the Electrical Installer shall provide a main earth bar within each LV switchroom for the 'A' side and 'B' side which shall be connected in a loop thereby providing an earth connection to each MV substation in accordance with SHTM 06-01.

The main earth bar shall comprise a 50 mm x 6 mm (minimum) high conductivity copper earth bar mounted on top of the LV switchboard.

A main earthing conductor shall be connected to the earth electrode network for each substation which shall be not less than 185mm^2. The main earthing conductor shall terminate at the main earth bar within each LV switchroom via removable test links.

A 11kV switchgear & transformers shall be bonded to the main earth bar. In addition the armour of all sections of 3-core 11kV cable shall be connected to the respective casings and bonded to the main earth bar.

The circuit protective conductors for the outgoing LV sub-mains cables shall be connected to the main earth bar.

Supplementary bonding conductors shall be provided together with all necessary clamps and cable terminals from the main earth bar to any extraneous conductive parts of metallic items located within the substation to maintain an equipotential zone.

Main equipotential bonding conductors

All main equipotential bonding conductors shall be in accordance with BS 7671 (17th Ed.).

A main equipotential bonding conductor shall be installed from the main earth bar located in the LV switchroom of each substation to all incoming main metallic piped services except Telecommunication systems, main pipework at boilers & chillers and to the main ductwork at air handling units. Where these services enter the building at basement level the main equipotential bonding conductors shall be bonded to earth bars within the basement serving a group of services and each earth bar shall be bonded to the main earth bar located in the LV switchroom of each associated substation.

The extraneous conductive parts of all other separate metallic services particular to the building shall be connected including medical gases, compressed air and vacuum systems, lightning protection system and any exposed metallic parts of the building fabric.

Local earth bars may be installed in the plantrooms to reduce the cost of this installation and plantroom earth bars shall be connected to the main earth bar by means of main equipotential bonding conductors.

All main equipotential bonding conductors shall comprise individual single core copper conductors with a green/yellow LSOH sheath.

Main Equipotential Bonding Conductors shall have a cross-sectional area not less than half the cross-sectional area required for the earthing conductor serving that part of the installation.

Local equipotential bonding and protective earth continuity between equipment and the associated mains supply isolator(s) shall not depend solely upon the continuity of conduits, cable braiding, ducts or trunking; it shall be achieved by means of a dedicated copper earth cable connected with brass or copper fittings.

Supplementary bonding conductors

All supplementary bonding conductors shall be in accordance with BS 7671 (17th Ed.).

Supplementary bonding conductors shall be provided to extraneous metal work such as, but not limited to, metal sinks and work surfaces, air transfer grills, medical gas outlets, heating pipes and radiators, water pipes, drug cupboards, ceiling mounted hardware, conduits, trunking and cable trays, metalwork above the ceiling line, steel or wire basket cable trays, steel floor ducts (lids to be fly-lead tagged), steel floor plates (in or below floor line), metal support plates, metal cable outlet plates, metal suspended ceiling tiles (cross-bonded) and ‘computer’ flooring (cross-bonded).

Where practicable and so indicated, or in substations, switchrooms and sections of the Hospital and Energy Centre housing plantrooms or server rooms, the supplementary bonding shall be extended to the main metallic reinforcement in constructional reinforced concrete.

All supplementary bonding conductors shall comprise individual single core copper conductors with a green/yellow LSOH sheath.

A supplementary bonding conductor connecting two extraneous-conductive-parts shall have a cross-sectional area not less than 2.5 mm^2 if sheathed or otherwise provided with mechanical protection or 4 mm^2 if mechanical protection is not provided. All other supplementary bonding conductors shall have a cross sectional area not less than 4 mm^2.

Neutral to earth point

The neutral to earth connection point shall be derived at the substation as indicated on the earthing schematic.

Measurements & Testing

Project Co. shall at stages during, and upon completion of, the earthing installation perform & record measured results of tests to:-

- Check the integrity of the installed earth electrode & earthing system;
- Confirm the overall earthing resistance of the complete system and record test readings (which can be repeated in subsequent years by maintenance teams) to illustrate continued integrity, interconnections & performance.

Project Co. shall measure the overall resistance to earth of each part of the earth electrode network such as each zone of earth rods (i.e. earthing nests), contribution of buried services (e.g. water pipes) constructional foundations, pile caps and crane bases.

A number of readings shall be taken in order that averages can be derived and bands of uncertainty gauged. Tests shall be proposed & recorded for all parts of the earth electrode network.

Project Co. shall provide a group of fully documented tests intended to record the resistance of interconnections on key parts of the earthing installation. Tests should, without disconnection of earthing conductors, permit confirmation that bonds/ connections are in place and should record the connection resistance of at least:-

- Links between substation earth bars and metal work on switchboards, transformers, etc.
- Underground external links as may be used to connect any gates, barriers, etc to the earthing system.

Circuit protective conductors

A separate circuit protective conductor shall be installed together with the phase and neutral wiring for all circuits including sub mains cabling.

The earth terminal of all socket outlets shall be solidly earthed to the system.

Conduits and conduit fixings

Metal conduits crossing expansion joints shall be fitted with proprietary couplings with an earthing clip at each side of the coupling, connected by a 4 mm^2 copper stranded conductor and LSOH insulated.

Switch and riser cupboards earthing and bonding

In each riser cupboard at each floor, the Electrical Installer shall provide a high conductivity copper earth bar an earth bar linked to the main earth bar of the respective main low voltage panel within the LV switchroom.

This shall be used to connect all supplementary and equipotential earthing conductors for the area of the building served by that riser.

Server and hub rooms earthing and bonding

A local standard earthing bar shall be installed in the main core server room and hub rooms, and shall be connected by a green/yellow LSF insulated conductor back to the supply substation's main earth bar.

An additional earth bar (for earthing of IT/ hub equipment/ instruments only) shall be installed in the core server room and hub rooms, and shall be connected by green/yellow LSF conductor (separately from the standard earth bar connection above) back to the supply substation's main earth bar.

Functional earths generally

In the event that communications, imaging or other equipment requires a functional earth then, as for server & communications rooms above, a separate copper earth bar shall be installed and connected back to a designated earth bar using cream coloured LSF conductor.

Connection to anti-static floors/ conductive floors.

Where anti-static or conductive floor surfaces are to be installed, Project Co. shall provide (after liaison with the floor installer) one or more connection terminal(s) bonded to the local earth reference bar, and the floor installer shall be responsible for laying/ connecting all under floor tapes, tails, etc and for testing the finished floor parameters.

Imaging equipment earthing

Earthing in diagnostic imaging and radiotherapy rooms / suites such as dental X-ray equipment, ultrasound, nuclear medicine, bone density, MR, CT, PET as well as conventional radiotherapy, radiographic and fluoroscopic equipment, shall be compliant with MEIGaN V2.0 published by MHRA.

Sub-mains cables for imaging equipment shall be armoured, refer to Low Voltage Distribution specification (WW.A.P.1.2.20), however the steel wire armour (SWA) is intended to provide mechanical and electro-magnetic compatibility protection and shall not be used as the main earth conductor. Connection to earth shall be achieved by means of a copper conductor, having a cross sectional area (CSA) greater than or equal to that of the phase conductors. Where the medical device supplier specifies a greater cross sectional area, the supplier's instructions shall be followed. The copper earth conductor shall be connected to the source of the supply unless it can be shown that a more local distribution panel can provide a copper conductor of adequate CSA from the earth reference bar (ERB) to the earth distribution bar of the sub-station (verify by inspection). The cable supplying power to a three-phase installation shall be a five core cable, and the cable supplying power to a single-phase installation shall be a three core cable.

An earth reference bar (ERB) shall be provided in the following areas, subject to design development, within the RHSC-DCN Building:-

Floor	Department	Room Name	Room Number
*	*	*	*

(To be completed during detailed design stage)

The ERB shall be constructed as follow:

- 1st earth connection bar: serves all equipotential conductors for all permanently installed medical devices in the imaging room.
- 2nd earth connection bar: for supplementary bonding of all other extraneous metalwork within the imaging room. A small earth bar shall be connected to this bar for equipotential bonding of socket outlets and lighting.
- 3rd earth connection bar / stud: mains supply protective conductor. Bars 1 and 2 shall be bonded to bar 3.

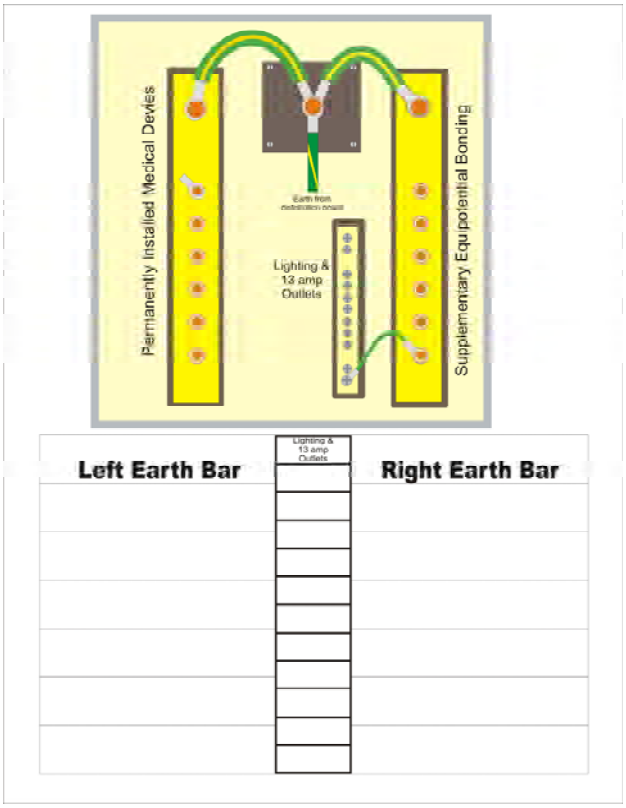

The copper connection bars shall be insulated from the building. Each copper connection bar shall have a cross sectional area capable of carrying the maximum predicted short circuit current and shall have tapped holes able to take studs mechanically and electrically compatible with the peak current and cable size. The connection bars shall be connected to the incoming earth conductor by means of flexible removable links, which will facilitate the use of a current-measuring probe. The links shall have a cross sectional area sufficient to carry the maximum rated current. The additional smaller bar to accommodate the protective earth and equipotential bonding conductors from the socket outlets and lighting shall be rated to carry the maximum short-circuit current of the socket outlet supply.

Generally, each ERB shall be bonded back to the earth bar in the local electrical riser by means of a protective conductor of equal cross section as the phase conductor of the mains supply to the room however in imaging rooms served by IPS systems the imaging ERB shall also be bonded to the protective earth terminal (PET) within the IPS serving the sockets within the room.

The imaging ERB installation shall comply with the following requirements:

- The mains supply protective earth conductor entering the location shall be terminated at the imaging ERB.

- The imaging ERB shall be close to the mains supply isolator in an accessible position at a height of 1200mm AFFL.

- The imaging ERB shall be installed in an enclosure with a cover that requires a tool to open it and shall be marked ‘Earth Reference Bar’.

- Each protective earth and equipotential bonding conductor shall be separately terminated and connected to the relevant connection bar by means of crimped connections.

- All circuit protective earth and equipotential bonding conductors shall be identified and a list of connections made, a copy of which shall be available in the imaging ERB cabinet.

- All exposed conductive surfaces of installed equipment shall be earthed to the imaging ERB. This includes the enclosures of warning lights, injectors, water baths, contrast media warming equipment, viewing boxes, powered drug cabinets surgical lamps etc. All such items shall be returned to the imaging ERB by means of a cable having a cross sectional area sufficient to ensure that the bonding resistance between the imaging ERB and the earth connection on any installed device is less than 0.1 Ω (this includes the earth receptacle of all 13 A mains outlets) or as specified by the equipment manufacturer.

- All fixed non-powered equipment with metal surfaces (extraneous conductive surfaces) shall be similarly bonded to the imaging ERB. This includes protective screens (including wings), metal sinks and work surfaces, air transfer grills, medical gas outlets, heating pipes and radiators, water pipes, drug cupboards, ceiling mounted hardware, conduits, trunking and cable trays, steelwork above the ceiling line (Unistrut or Marstrut for example) (cross-bonded), steel or wire basket cable trays, steel floor ducts (lids to be fly-lead tagged), steel floor plates (in or below floor line), metal support plates, metal cable outlet plates, metal suspended ceiling tiles (cross-bonded), ‘computer’ flooring (cross-bonded). All such items shall be returned to the imaging ERB by means of a cable having a cross sectional area sufficient to ensure that the bonding resistance between any two conductive surface in the room is less than 0.2 Ω. Earthing by means of trunking, conduits or screening alone is not permitted, a copper conductor shall be provided.

- The installation of socket outlets shall ensure that the circuit protective conductors together with the equipotential conductor achieve an earth resistance value of less than 100 milliohms between any socket outlet and the imaging ERB.

The SWA of the mains supply cable for the medical device is intended to provide mechanical and electro-magnetic compatibility protection; it shall not be used as an earth path. Connection to earth shall be achieved by means of a copper conductor, having a cross sectional area greater than or equal to that of the phase conductors unless the medical device supplier specifies a greater requirement. If the medical device manufacturer stipulates an electromagnetic interference (EMI) screen for the mains supply cables, the SWA shall be terminated with a zoned earthing and neutral (ZEN) gland.

The SWA shall be earthed only at the distribution board unless that would conflict with the equipment manufacturer's instructions for earthing arrangements for electromagnetic compatibility (EMC).

The imaging ERB for the MRI suites shall be located on the equipment room side of the Faraday cage at the earth connection point specified by the manufacturer. The brass stud used to connect each side of the Faraday cage is deemed to be the incoming earth to the diagnostic room. This stud shall be securely connected to the Faraday cage. The imaging ERB enclosure shall be non-metallic, or at least non-ferrous, to prevent interaction with the high magnetic field. The supply-side conductor shall be one cable directly connected to the incoming supply equipotential conductor.

High integrity earthing

All power circuits and accessories shall be provided with high integrity earthing in accordance with Section 543.7 within Chapter 54 of BS 7671 (17th Ed.)

Small power circuits wired by means of 4mm^2 radial circuits in metal conduit will achieve high integrity earthing without the need for any further special measures.

Cabling and containment earthing and bonding

Earth cabling shall be contained on the ladder rack and tray work distribution serving the LV cabling systems, as required. Tray work for the containment of vertical earthing cabling to and from points of termination shall be provided as necessary.

IT cabinet earthing shall be contained on the ladder rack and tray work distribution serving the LV cabling systems.

Earthing for Isolated Power Supplies

The PET integral to the IPS shall be earthed via the CPC of the Isolated Power Supply incoming sub-main cable, and shall act as an equipotential earth only, as far as the final circuits are concerned. These final circuit equipotential bonding conductors shall be sized as indicated on the distribution board schedules. Refer to the following diagram, figure 10.1B, taken from IEE Guidance Note 7 (Chapter 10) for typical arrangement of Isolated Power Supply earthing.

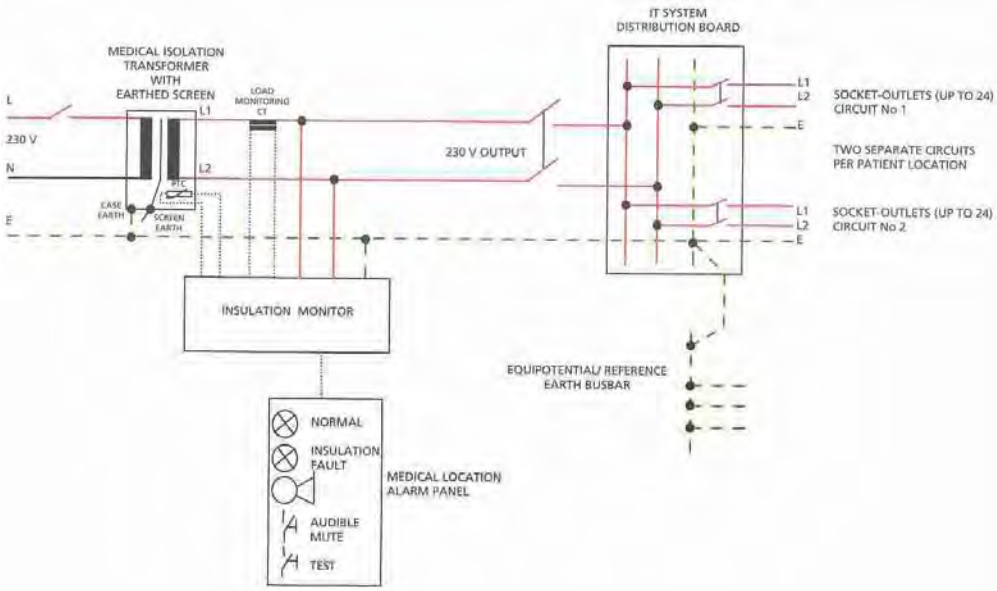

The earth terminals of socket outlets fed from the IPS shall be connected via equipotential bonding conductors to the protective earth bar within the isolated power supply unit.

Supplementary equipotential bonding conductors within the area served by the IPS shall be installed and connected to the PET integral to the IPS for the purpose of equalising potential differences between the following parts, located in the “patient environment”:

- Protective conductors;
- Extraneous-conductive-parts;
- Screening against electrical interference fields, if installed;
- Connection to conductive floor grids, if installed;
- Metal screen of the isolating transformer, if any.

The resistance of the conductors, including that of the connections, between the terminals for the protective conductor of socket-outlets and of fixed equipment or any extraneous-conductive-parts and the bonding busbar shall not exceed 0.2 Ω. The adequacy of the bonding shall be verified to ensure the touch voltages within the patient zone are not exceeded.

Note: The earthing and bonding in the operating theatres and similar medical locations shall comply with figure 10.1A of IEE Guidance Note 7 (Chapter 10), see below. The protective earth bar (or PET) shall be integral to the IPS and the required equipotential reference earth bonding bar shall be located adjacent to each Isolated Power Supply unit.

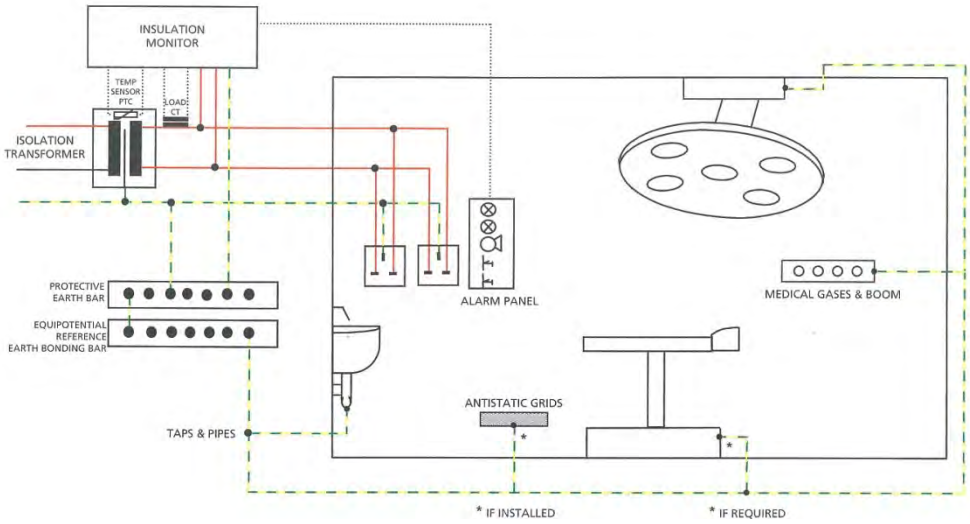

Earthing for Pendants in general

Pendants and all powered outlets within shall be earthed in accordance with the pertinent requirements for isolated power supplies, standard power outlets, equipotential bonding, etc as described above.

In addition, for Theatres and for any other areas so notified, if a Patient Earthing Terminal is incorporated in the pendant of other equipment design, it shall be connected to the relevant theatre earth reference bar by means of a dedicated copper (insulated) cable no less than 6mm^2.

V81 Earthing and bonding systems

To be read with Preliminaries/ General conditions.

GENERAL

110 EARTHING AND BONDING SYSTEMS GENERALLY

- Main incoming earth: Separate earth electrode network per MV substation.
- Size of main earthing conductor: To BS 7671 Regulation 543.1.3.
- Main earth electrode type: Earth rods.
- Main equipotential bonding
  - Connect the following to the main earthing terminal:
    All extraneous-conductive parts of an installation including, but not limited to:
    water service pipes,
    gas installation pipes,
    other service pipes and ducting,
    central heating and air conditioning systems,
    exposed metallic structural parts of the building,
    the lightning protective system.
  - Cable type: LSZH singles, as section V32.
  - Size: To BS 7671 Regulation 544.1.1.
- Supplementary equipotential bonding: Bond the following:
  exposed conductive parts,
  extraneous conductive parts.
  Refer to particular section.
  - Cable type: LSZH singles, as section V32.
  - Size: Minimum of 2.5 mm² if sheathed or where mechanical protection is provided, otherwise minimum 4 mm², and in areas with IPS units subject also to constraints imposed by interconnection impedance limits.
- Circuit protective conductors
  - Type: Refer to cable and distribution board schedules .
  - Size: Refer to cable and distribution board schedules.
- Earth terminal: main earth bar mounted on LV switchboard in each main LV switchroom. Separate wall mounted earth bar in each riser cupboard at each floor. Separate functional and general earth bar in each server and hub room. Separate reference earth bar installed in each diagnostic imaging and radiotherapy room/suite.
- Earthing of metal fencing around substations: Required.
- Accessories:
  - Earth bar;
  - Earth clamps; and
  - Soil conditioning agent

SYSTEM PERFORMANCE

210 DESIGN

- Standards: To BS 7671 and in accordance with BS 7430.
- Design: Complete the design of the earthing and bonding systems.
- Proposals: Submit drawings, technical information, calculations and manufacturer's literature.

220 ELECTRICITY DISTRIBUTOR'S REQUIREMENTS

- Electricity distributor: Comply with the requirements of the Electricity Distributor.
  - Evidence of compliance: Submit.

230 EQUIPOTENTIAL BONDING IN BUILDINGS WITH INFORMATION TECHNOLOGY EQUIPMENT

- Standard: To BS EN 50310.
- Objectives: Serving the two main server rooms.

250 GENERATOR EARTHING DESIGN

- Standard: To BS 7430 and in accordance with the Electricity Distributor's requirements.
- Independent earth electrode network: Provide.
  - Individual earth electrode resistance (maximum): 20 ohm.
  - Overall resistance to earth of earth electrodes in combination (maximum): 1 ohm.
- Generator operation: Short term parallel with mains electricity supply.
- Earth connection to generator: Provide.

255 MOBILE GENERATOR EARTHING

- Mobile generator earthing: Provide an earthing system with ‘user terminal’ capable of being connected to a mobile generator.
  - Mobile generator position At energy centre.

260 HIGH INTEGRITY EARTHING DESIGN

- Scope: Applies to all small power circuits, and accessories, serving socket outlets.

270 DESIGN FOR HAZARDOUS AREAS

- Standard: To BS EN 60079-14.

280 DESIGN FOR THE SAFE USE AND HANDLING OF FLAMMABLE LIQUIDS

- Design: In accordance with HS(G) 140 from UK Government Health & Safety Executive.

PRODUCTS

310 PRODUCTS GENERALLY

- Standards: To BS 7671 and in accordance with BS 7430.

320 EARTHING AND BONDING CONDUCTORS general

- Type: Bare, tinned, LSZH-covered and lead-covered copper tape to BS EN 13601.
- Manufacturer: Board's choice.
  - Product reference: Board's choice.

360 EARTH RODS

- Standards: In accordance with BS 7430 and Energy Networks Association Technical Specification 43-94.
- Type: Solid copper rods.
- Manufacturer: Board's choice.
  - Product reference: Board's choice.
- Size (diameter): As per particular specification, schematics and drawings.

370 COPPER EARTH PLATES

- Standard: To BS EN 13601.
- Type: Board's choice.
- Manufacturer: Board's choice.
  - Product reference: Board's choice.
- Size: Board's choice.
  - Thickness: Board's choice.

380 EARTH ELECTRODE INSPECTION PITS

- Type: Concrete.
- Manufacturer: Board's choice.
  - Product reference: Board's choice.
- Load rating (minimum): 5000 kg.
- Identification: Permanently identify with the wording 'SAFETY EARTH'.

390 MAIN EARTH BARS GENERALLY

- Manufacturer: Board's choice.
  - Product reference: Board's choice.
- Material: Hard drawn copper to BS EN 13601.
- Location: As per particular specification, schematics and drawings.
- Size:
  - Profile: As per particular specification, schematics and drawings.
  - Length: Board's choice but minimum 1000mm MV for and 450mm for earth bars associated with LV installation elsewhere within the Hospital & Energy Centre.
- Predrilled connections: Board's choice.
- Disconnecting links: 2.

440 EARTHING AND BONDING CLAMPS

- Standard: To BS 951.

460 SOIL CONDITIONING AGENTS

- Type: Submit proposals.

EXECUTION

610 GENERAL INSTALLATION

- Standards: To BS 7671 and in accordance with BS 7430.

660A INSTALLING EARTH RODS

- Position: In undisturbed ground.
  - Location: At least 2 m from building and metal fencing, avoiding communications cabling.

- Rod separation:
  - General earth installations: Space the rods apart by at least 1.25 times the depth of the longest rod.
- Rod alignment: Vertical.
- Rod length (minimum): 2.4 m.
- Couplings: Apply corrosion inhibiting paste to the threads and enclose so that rods meet at centre of coupling.
- Earth rod heads: Enclose and position within 100 mm of ground level.
  - Enclosure: Concrete inspection pit.
- Earth rods: Interconnect with PVC insulated copper tape.
  - Tape size: 25 mm x 6 mm.
  - Tape depth: 750 mm below ground.
  - Jointing method: Exothermic.
- Internal earth rods: Provide seals.

670 INSTALLING SURFACE BARRIERS AROUND EARTH RODS

- Non-conducting barriers: Install to prevent personnel or livestock contact with the ground within 2 m of earth rods.
  - Location and design: Submit proposals.

680 INSTALLING EARTH PLATES

- Earth plates: Install vertically. Backfill immediately following installation.
  - Depth of plate top (minimum): 1000 mm below finished ground level.
  - Location: Board's choice .

700 INSTALLING EARTH BARS

- Main earth bar location: Next to the main switchboard.
- Multiple earth bars: Connect with a conductor ring.
- Mounting: Insulated supports.
  - Support spacing: 300 mm for 25 mm bar and 450 mm for 50 mm bar.
  - Clearance between wall and earth bar (minimum): 30 mm.

710 INSTALLING MAIN EARTHING CONDUCTOR

- Conductor location: Install between the main incoming earth and the main earthing terminal in one continuous length.
- Connection: Make with compression lugs and phosphor bronze nuts and bolts and spring washers.
- Earthing conductor route: Board's choice.
- Connection to earth electrodes: Heavy duty copper alloy mechanical clamps.
- Protection to main earthing conductor: Not required.

720 INSTALLING MAIN EQUIPOTENTIAL BONDING CONDUCTORS

- Separate and continuous connections: Install between each service and the main earth terminal.
- Bonding conductor routes: Board's choice.
- Bonding connections at main earth terminal: Connect with compression lugs and phosphor bronze nuts and bolts and spring washers.

730 INSTALLING SUPPLEMENTARY BONDING CONDUCTORS

- Earth connections: Connect with compression lugs.

740 INSTALLING EARTH ELECTRODE PITS

- Locations: Submit proposals.
- Inspection pit lid: Install flush with the finished ground surface.

750 DISSIMILAR METALS

- Connecting dissimilar metals: Prevent electrolytic action.

760 EARTHING AND BONDING OF STREET FURNITURE

- Standards: To BS 7671 and in accordance with the Electricity Distributor's requirements.
- Supplies to street furniture: Use cables with separate phase, neutral and protective conductors.

770 EARTHING OF METAL FENCING AROUND SUBSTATIONS

- Type: Connected to substation earthing system.

COMPLETION

910 INSPECTION AND TESTING

- Standards:
  To BS 7671 and in accordance with BS 7430.
  To guidance/ procedures described in MEIGaN V2.0
- Notice before commencing tests (minimum): 24 h.
- Continuity of protective conductors:
  - Parallel earth paths: Isolate before testing.
  - Equipment: Continuity tester with short circuit current not less than 200 mA, and a no load d.c. or a.c. voltage between 4 V and 24 V.
- External earth fault loop impedance: Direct measurement.
- Earth fault loop impedance:
  - Method: Direct measurement.
  - Measurement locations: Origin, switchgear, fixed equipment and outlets, and circuit extremities.

920 NOTICES AND LABELS

- Standard: To BS 7671.
- Material: Face engraved rigid plastics laminate.
- Colour:
  - Background: White.
  - Lettering: Red.
- Typography:
  - Font: Helvetica medium.
  - Size: Submit proposals.
- Earth bars: Describe each connection and label with _SAFETY ELECTRICAL CONNECTION – DO NOT REMOVE_.
- Main earthing and bonding connections: Describe each connection and label with _SAFETY ELECTRICAL CONNECTION - DO NOT REMOVE_.
- Telecommunications functional earth connections: Label with "TELECOMMS EARTH - DO NOT REMOVE".

930 IDENTIFICATION OF FUNCTIONAL EARTHING

- Labelling: Identify the purpose of functional earth cables along their length using clip-on cable markers.
  - Spacing (maximum): 3 m.

940 DOCUMENTATION

- Operation and maintenance instructions, record drawings & test/commissioning certificates to be compatible with the proposed document management system
- Operation and maintenance instructions: Submit.
- Record drawings: Submit.

Specification Check / Revision Sheet

Project	**RHSC and DCN Edinburgh Hospitals**	Project Number	**G1547**
Service (s)	**Mechanical & Electrical**	Sheet	**WW AP.1.2.26 JB G1547**
Performance Specification Title	**Water Detection Systems**	Date	**August 2014**
Prepared By	**JB**	Checked By	**PM**

Revision Ref.	Date of Revision	Page N$^{o(s).}$	Revision Details	Checked By
FT	December 2013	All	Final Tender	PM
FC	July 2014	All	Update for Financial Close	JB
FC	August 2014	All	Comments Incorporated	JB

RHSC and DCN EDINBURGH
WATER DETECTION SYSTEMS

CONTENTS

1.0	GENERAL INTRODUCTION
2.0	SCOPE
3.0	INTERFACES AND DEMARCATIONS
4.0	APPLICABLE STANDARDS
5.0	DESIGN CRITERIA
6.0	LIAISON
7.0	SYSTEMS

MATERIALS AND WORKMANSHIP CLAUSES

W58	Water Detection and Alarm Systems

1.0 GENERAL INTRODUCTION

Purpose of Document

The manufacture, supply, installation, wiring, connecting, setting to work and commissioning of the works described in this document.

This specification relates to the Low Voltage Distribution system serving the RHSC-DCN Building and the associated Energy Centre

This specification shall be read in conjunction with all other mechanical and electrical engineering services specifications and the Architectural drawings.

Description of Project

The new facility shall re-provide services from the Royal Hospital for Sick Children, Child and Adolescent Mental Health Service and the Department of Clinical Neurosciences in a single building adjoining the Royal Infirmary of Edinburgh at Little France.

The DCN part of the Facilities will have a physical link with the existing RIE Facilities specifically with the critical care unit.

The building is generally constructed from reinforced concrete.

The basement houses FM support facilities and the main building services heat distribution centres and electrical plant rooms.

Ventilation plantrooms are generally located at roof level and level 2.

A central Energy Centre shall be provided to the South of the hospital housing heating, CHP, standby generation, fuel storage and utility incomers.

2.0 SCOPE

The scope of work covered by this Specification shall include, but not be limited to the following:-

- Sensing cable type water detection systems
- Sensing probe type water detection systems

Drawings

Project Co. shall prepare general arrangement drawings of the Water Detection Systems based on the Architect's base drawings and co-ordinated with other services and building elements.

The drawings shall indicate as a minimum:-

- Areas protected
- Sensing cables/probes
- Alarm panels

3.0 SPECIFIC EXCLUSIONS

The following is specifically excluded from the scope of this element of the Specification:-

- Power wiring
- Main cable containment (other than final run outs of conduits)
- Major leak detection (i.e. by differential pressure detection to pipework)

4.0 INTERFACES AND DEMARCATIONS

The Water Detection Systems shall be integrated with a host Internet Protocol network which will support communication, interaction, data transfer and data retrieval from and between the various engineering systems in the building. The Water Detection Systems shall be connected to the host network via gateways. The Building Management System (BMS) will be provided with a Graphical User Interface which will permit the interrogation of the Water Detection Systems down to component level. It is not intended that the BMS will control the system but rather will monitor component status and provide fault alarm indication at the Graphical User Interface.

5.0 APPLICABLE STANDARDS

All elements of the works shall be designed in accordance with the requirements of current legislation, regulations and standards stated in the materials & workmanship clauses.

6.0 DESIGN CRITERIA

Electricity Supply Characteristics

LV power characteristics: 400/230 V, 3-phase, 50 Hz, 230 V, 1-phase, 50 Hz.

7.0 LIAISON

Project Co. shall include for liaison with:-

Health and Safety Professionals. As well as the Health and Safety requirements of this specification, Project Co. shall include for close liaison with Health and Safety professionals including the Hospital's Health and Safety Advisors and the CDM Co-ordinator and shall comply with the CDM Regulations and all Health and Safety regulations.

The Hospital. Project Co. shall include for liaison in conjunction with the Board with members of the Hospital's team with an interest in the planning and administration of the Water Detection Systems.

8.0 SYSTEMS

Water detection shall be provided at:-

- Perimeter of core server room (sensor cable);
- Perimeter of all Hub rooms (sensor cable);
- Plant room bunds above or immediately adjacent to Theatre Department and Radiology departments.

Sensor probes shall be provided within the basement sumps to indicate high level warning.

Panels

Wall mounted water detection panels shall be located on the fully loaded drawings.

The panels specified herein shall be self-rebooting following mains failure and generator test conditions.

Sensor Cables

Water sensing cables shall be provided in core server room shall be laid around the perimeter of the room and in parallel strips 2m apart on the floor.

Water sensing cables shall be provided in Hub rooms shall be laid around the perimeter of the room and in parallel strips 2m apart on the floor.

Sensor probes

Sensor probes shall be provided in the sumps within the Basement and shall be floor mounted.

Sensors shall be suitable for plantroom environments and provided with a robust protective housing.

Cables linking the sensors and local panels shall be run in robust containment systems.

Alarms

In the event of local leakage, local audible and visual alarms shall be raised and repeated at the BMS front end.

W58 Water detection and alarm systems

To be read with Preliminaries/ General conditions

GENERAL

110 WATER PRESENCE DETECTION AND ALARM SYSTEMGENERALLY

- System manufacturer: Board's choice.
- Areas to be protected: Refer to Particular Specification.
- Zones: Refer to Particular Specification.
- Sensor types: Cable and Probe.
- Control panels: Required.
- Connection cable to sensors: Required.
  - Cable type: System manufacturer's standard.
  - Containment: Rigid metallic conduit, as section Y63.
  - Rewireable installation: Required.
  - Concealed installation: Required.
- Alarm indication:
  - Internal: Submit design and cost proposals.
  - External: Submit design and cost proposals.
- Completion: Submit design and cost proposals.

SYSTEM PERFORMANCE

210 DESIGN

- Design: Complete the design of: The water leak detection and alarm system.
- Proposals: Submit drawings, technical information, calculations and manufacturers' literature.
- Zone diagram: Submit for water presence detection and alarm system.

220 ZONING AND IDENTIFICATION FOR WATER PRESENCE AND ALARM SYSTEM

- Zoning: Divide the installation into separately controlled and identifiable zones.
- Sensor identification: Individual address.

230 INTEGRATION WITH OTHER ALARM AND SECURITY SYSTEMS

- Objectives: Integration with BMS.
- Systems to be integrated: Building monitoring and management systems, as section Y41.

PRODUCTS

310 CABLE SENSORSFOR SERVER ROOMS, HUB ROOMS AND PLANTROOM BUNDS.

- Type: Four wire with LSZH sheath.
- Manufacturer: System manufacturer.
  - Product reference: Board's choice.
- Cable length: Submit proposals.
- Accessories: Hold down clips and Identification tags.

330 PROBE SENSORSFOR BASEMENT AND TUNNEL SUMPS.

- Type: Floor mounted.
- Manufacturer: Submit proposals.
  - Product reference: Submit proposals .
- Accessories: Protective housing.

350 CONTROL PANELS GENERALLY

- Manufacturer: System manufacturer.
  - Product reference: Board's choice.
- Features:
  - Individual zone alarm indicators;
  - Individual zone fault indicators;
  - Individual zone healthy indicators; and
  - BMS interface.
- Integral battery back up: Not required.
  - Low battery alarm: Required.

  Alarms:
  - Audible;
  - BMS connection;
  - Remote; and
  - Visual.
- Accessories: 50 event log.

370 VISUAL ALARM SIGNAL DEVICESGENERALLY

- Manufacturer: System manufacturer.
  - Product reference: System manufacturer.
- Type: LED.
- Flash rate
  - (Minimum): 30 per minute
  - (Maximum): 130 per minute
- Lens:
  - Material: Polycarbonate.
  - Colour: Clear.
- Enclosure ingress protection to BS EN 60529: IP44.

EXECUTION

630 INSTALLING CABLE AND TAPE SENSORS

- Fasteners:
  - Floors and ceilings: Self adhesive clips.
  - Pipework: Reusable wrap around bands.
- Contact between sensor and item being monitored: Required.
- Coverage: Lay in loops or wave pattern.
- Spacing between cables and between tapes (maximum): Submit proposals.

640 INSTALLING POWER SUPPLIES

- Equipment to be connected: Control panels.
- Power supplies: As Circuit schedule.
  - Final connection accessory type: Unswitched fused connection unit.

660 INSTALLING PROBE SENSORS

- Fixing: Screw fix.
- Spacing between probes (maximum): 2 m.

670 INSTALLING CONTROL PANELS

- Location: As SPA1046 on Architect's fully loaded layouts and WW electrical services plantroom layouts.
- Connection to sensors: Required.

COMPLETION

910 DOCUMENTATION

- Operation and maintenance instructions, record drawings & test/commissioning certificate to be compatible with Zutec system
- Operation and maintenance instructions: Submit.
- Record drawings: Submit.

930 SENSOR IDENTIFICATION AND TESTING

- Sensor identification: Label devices with a unique identity.
- Sensor testing: Verify the operation of each sensor. Submit a schedule of sensors, including the device test methods and results.

940 BATTERY BACK UP TESTING

- Mains power supply: Isolate.
- Quiescent mode: Measure current supplied by standby source when water presence detection and alarm system is operating in the quiescent mode. Submit results.

950 TESTING ACTUATION, INTEGRATION AND INTERFACING WITH ALARM AND SECURITY SYSTEMS

- Connections with other systems and equipment: Verify and demonstrate operation of the systems and equipment under leak and fault conditions.

Specification Check / Revision Sheet

Project	**RHSC and DCN Edinburgh Hospitals**	Project Number	**G1547**
Service (s)	**Electrical**	Sheet	**WW AP.1.2.27 JB G1547**
Performance Specification Title	**Lightning Protection System**	Date	**August 2014**
Prepared By	**PM**	Checked By	**JB**

Revision Ref.	Date of Revision	Page N$^{o(s).}$	Revision Details	Checked By
FT	December 2013	All	Final Tender	JB
FC	July 2014	All	Update for Financial Close	JB
FC	August 2014	All	Comments Incorporated	JB

RHSC and DCN EDINBURGH
LIGHTNING PROTECTION SYSTEM

CONTENTS

1.0	GENERAL INTRODUCTION
2.0	SCOPE
3.0	PERFORMANCE SPECIFIED SYSTEMS
4.0	APPLICABLE STANDARDS
5.0	DESIGN CRITERIA
6.0	LIGHTNING PROTECTION SYSTEM

MATERIALS AND WORKMANSHIP CLAUSES

W60	LIGHTNING PROTECTION SYSTEM
Y67	TRANSIENT OVERVOLTAGE SURGE SUPPRESSION DEVICES

1.0 GENERAL INTRODUCTION

Purpose of Document

The manufacture, supply, installation, wiring, connecting, setting to work and commissioning of the works described in this document.

This specification relates to the Low Voltage Distribution system serving the RHSC-DCN Building and the associated Energy Centre.

This specification shall be read in conjunction with all other mechanical and electrical engineering services specifications and the Architectural drawings.

Description of Project

The new facility shall re-provide services from the Royal Hospital for Sick Children, Child and Adolescent Mental Health Service and the Department of Clinical Neurosciences in a single building adjoining the Royal Infirmary of Edinburgh at Little France.

The DCN part of the Facilities will have a physical link with the existing RIE Facilities specifically with the critical care unit.

The building is generally constructed from reinforced concrete.

The basement houses FM support facilities and the main building services heat distribution centres and electrical plant rooms.

Ventilation plantrooms are generally located at roof level and level 2.

A central Energy Centre to the South of the hospital houses heating, CHP, standby generation, fuel storage and utility incomers.

2.0 SCOPE

The scope of work covered by this Performance Specification shall include the following:-

- Design and installation of concealed Lightning Protection system
- Risk assessment, in accordance with BS 62305, on the requirements for additional transient overvoltage surge suppression devices (SPD) in addition to the surge suppression devices installed in the main LV switch boards, refer to WW Low Voltage Distribution specification WW.A.P.1.2.20
- Attendance on site at various stages of construction
- Testing and commissioning

3.0 PERFORMANCE SPECIFIED SYSTEMS

The Lightning Protection system is a performance specified system and this specification outlines the requirements to be met by the system.

4.0 APPLICABLE STANDARDS

All elements of the works shall be designed in accordance with the requirements of current legislation, regulations and standards stated in the Materials & Workmanship clauses.

5.0 DESIGN CRITERIA

General

The Lightning protection systems shall be designed to reduce the risk of lightning causing injury to occupants, failure of crucial electrical, data/telecommunications and M&E systems, or damage to the building fabric or structure.

The Engineering services in the RHSC-DCN are vital for the correct and safe continued operation of the hospital and the well-being of staff and patients. Accordingly, great care shall be taken to ensure that the lightning protection systems provide an appropriate level of protection against the effects of lightning strikes to:

- the building
- the services entering the building
- other buildings with services connections to the building.

As an initial guide for information only, a preliminary review has been carried out of the lightning protection requirements for the RHSC-DCN, to provide an estimate of the Lightning Protection System Classification based upon the recommendations of BS EN 62305.

The resulting estimate indicates that a Class I lightning protection system is required for its structure. The Specialist shall, as part of the detailed design, carry out a detailed assessment in accordance with BS EN 62305, to verify the precise Classification of the required system.

In accordance with BS EN 62305, the Specialist shall perform a risk assessment on the requirements for additional transient overvoltage surge suppression devices on cables entering/exiting the building, local to equipment such as IT racks and for any other electrical systems on the roof, in addition to the surge suppression devices installed within the main LV switch boards, refer to the Low Voltage Distribution specification, WW AP.1.2.20, for further details.

Earthing of the electrical distribution systems and bonding of extraneous metalwork is specified under a separate package (refer specification WW AP.1.2.25). Inasmuch as there may be connection between the lightning protection systems and the electrical system earthing, the Specialist shall take heed of relevant design standards for earthing generally (such as SHTM 06-01, BS 7430 Code of Practice for Protective Earthing of electrical installations, BS7671 (17th Ed) BS EN 50310 Application of equipotential bonding & earthing in buildings with IT equipment) and shall co-ordinate the earthing connections.

Electricity Supply Characteristics

LV power characteristics: 400/230 V, 3-phase, 50 Hz, 230 V, 1-phase, 50 Hz.

Drawings

As part of the development of the design the Specialist shall prepare general arrangement drawings of the Lightning Protection System based on the Architect's base drawings and coordinated with other services and building elements.

The drawings shall indicate as a minimum:-

- Lightning Protection Systems roof plans
- Lightning Protection Systems elevations
- Connection details for Air Termination Network to steel frame, perimeter tapes and down conductors
- Connection details for down conductors
- Earth termination provisions and electrode/pile layouts
- Details of down conductor to earth termination network connection
- Details of test points and access provisions
- Details of bonding to services
- Details of bonding to curtain walling/cladding
- Details of integration with concrete frame
- Details of integration with building fabric
- Details of additional transient overvoltage surge suppression devices and installations

The Specialist is reminded of the requirement for Record Drawings (as-built), to be submitted prior to completion, (refer to section W60)

Liaison

The Specialist shall include for liaison with:-

Health and Safety Professionals. As well as the Health and Safety requirements of Parts A, B and C of this specification, the Specialist shall include for close liaison with Health and Safety professionals including the Trust's Health and Safety Advisors and the CDM Co-ordinator and shall comply with the CDM Regulations and all Health and Safety regulations.

The Hospital. The Specialist shall include for liaison in conjunction with the Board with members of the Hospital's team with an interest in the planning and administration of the Lightning Protection System.

The Project Teams. Any other member of the Project and Board concerned with the planning and administration of Lightning Protection Systems.

6.0 LIGHTNING PROTECTION SYSTEM

General

The Specialist shall design and install a Lightning Protection System for the new RHSC-DCN building. The Specialist shall carry out an assessment and develop the detailed design requirements for the lightning protection system based on building details and detailed construction information.

The Specialist shall be responsible for the final selection of all equipment, tape and cabling and detailing of bonding and interconnection of any structural steel and reinforcing bars used in the Lightning Protection System.

The Specialist shall provide advice during the design phase on the most cost effective approach.

The systems to be provided shall principally comprise roof mounted air terminations connected to down- conductors with these in turn connected to the general mass of Earth.

The Specialist shall, for equipotential bonding purposes, bond together all metallic current paths available as part of the building construction and the lightning protection system. These shall include:

- Tape down conductors
- Reinforcement bars in the floor slabs
- Reinforcement bars in the pile caps
- Metallic roof coverings where suitable
- Roof edge tapes and air termination system

The completed systems shall accord with the recommendations of BS EN 62305.

The Specialist shall develop the concept into a design fully compliant with BS EN 62305 and provide a fully compliant installation. Where requested, the specialist shall provide copies of his calculations to prove the compliance of the design.

The completed system shall be provided with facilities that allow the system to be regularly tested.

The system shall be designed to provide the minimum necessary mesh width to reduce circulating currents throughout the building.

Finials

Finials shall be provided as appropriate at positions of around the building to reduce the risk of direct strikes to structure. These shall be connected to the linear air terminations and/or down conductors.

Air Terminations

The installation shall, where practicable and as far as possible, make use of the metal construction of the roofs as part of the air termination network.

Perforation of the metallic skin of the roof due to lightning strikes is not permissible.

Where necessary, supplementary conductor tape shall be installed to ensure a continuous roof termination network. Where required, e.g parapets, the conductor tape shall be PVC insulated and colour coordinated with the building.

The air termination network shall be bonded to the metallic roof coverings.

All antennae and other roof mounted exposed extraneous metalwork components of the building such as, but not limited to, the Helipad and its access ramp, handrails, plant housings, TV aerials, satellite dishes, radio masts, flag posts, CCTV brackets and towers, etc shall be bonded to the air termination network and protected by finials where necessary.

The Specialist shall note that use of “green roofs” and shall allow for these to be suitably incorporated into the system.

Down Conductors

Where down conductors, other than natural down conductors, are required they shall be copper tape or rods.

Down conductors shall be concealed behind the building cladding system. The Employer’s Requirements prohibit down-conductor tapes being installed exposed on the surface of the cladding system.

The Specialist shall liaise with the curtain walling and cladding specialists and include for adequate bonding to the metal supporting frames of these cladding systems.

Earth Terminations

The Specialist shall consider all appropriate methods of earthing the Lightning Protection System, to ensure an effective earth termination network taking into account the construction of the foundations. The earthing shall be achieved by using a combination of:

- the structural foundations
- earth rods
- a ring conductor

Earth electrodes shall be provided within purpose-made inspection pits with a lockable, hinged lid. Where these are located under hard surfaces they shall be suitable for pedestrian or vehicular traffic as appropriate.

Connections between the down conductors and the earth electrodes shall be contained in suitably sized earthing pits with removable covers.

The Specialist shall provide an effective means of decoupling the Lightning Protection System from the earth termination network for test purposes in accordance with BS EN 62305.

The Specialist shall carry out earth resistivity tests to determine the earthing properties of the ground on site.

Helipad

A helipad will be constructed above the DCN. This will have a steel structural frame and an access ramp also of steel framework construction. The structure of the helipad and ramp shall be bonded to the lightning protection system, and may be incorporated as part of the air termination system if the construction details are suitable.

Bonding of Building Fabric and Structure

Project Co. shall advise on the detailed requirements for bonding the building fabric and structure to the lightning protection system, and for the mutual bonding of the various components of the fabric and structure. This shall include the reinforcement bars and concrete frame and floors of the structure, the cladding system sub-frames, the Helipad and any ancillary metalwork such as the maintenance hoist rails, and the mutual bonding between separate sections of any floor slab across construction, expansion and movement joints etc.

Transient Overvoltage Surge Suppression Systems

In accordance with BS EN 62305, the Specialist shall perform a risk assessment of the requirements for additional transient overvoltage surge suppression devices in addition to the surge suppression devices installed within the main LV switch boards, refer to the Low Voltage Distribution specification, WW AP.1.2.20, for further details. Such systems which may require additional surge suppression, dependent on the outcomes of the risk assessment are listed below:-

- Helipad
- Roof mounted warning lights
- PV installation, consider surge suppression at coupling point with electrical distribution network
- Aerials/satellite dishes and associated system electronics
- Roof level perimeter tracks and their associated cleaning system
- Power & data cables entering/exiting the building including external lighting cables and copper telephone cables
- Equipment such as IT racks/servers
- etc

Should additional surge suppression devices be required, the Specialist shall design co-ordinated systems of transient overvoltage surge protection for the incoming electrical and data/telecommunications services and their distribution systems.

The Specialist shall review the transient overvoltage surge suppression requirements for the LV installation to provide complete transient overvoltage protection to the whole LV system, using the minimum necessary number of levels of protection. If further levels of protection are required, in addition to those located at the main LV switchboards, these shall be included at the sub LV panel boards, and at local distribution boards. The Specialist shall be responsible for defining the types of surge protection device at each level (Types I, II or III SPDs) as part of the design process.

The transient overvoltage surge suppression system for the data and telecommunications systems shall be designed based on the withstand properties of the data and telecommunications equipment being installed by the Data/Telecommunications Specialist.

Project Co. shall liaise closely with the Board, the and Data/Telecommunications Specialist to review and confirm the necessary details of the LV distribution system and the data/telecommunications installations, and shall carry out the detailed design of the transient overvoltage surge suppression (SPD) installations accordingly.

Attendance

Attend site at various stages of construction to:-

- Test the conductivity of the ground and to determine the most appropriate means of achieving the earth termination network
- Test the air termination network to ensure continuity
- Test the connection between the lightning protection system components to ensure complete continuity from the air termination network through the down conductor system to the ground termination network

Testing

Upon completion of the whole system, tests shall be conducted and the results included within the project record documentation.

MATERIALS AND WORKMANSHIP CLAUSES

W60 Lightning protection systems

To be read with Preliminaries/General conditions

GENERAL

110 BUILDING CONSTRUCTION FOR INFORMATION GENERALLY

- Substructure: In-situ concrete piles.
- Superstructure: Pre-cast sectional concrete columns, In-situ concrete floor slabs, partial in-situ concrete core structures.
- Roof structure: Steel framed; and/or - concrete in-situ roof with pre-cast sectional concrete columns
- Roof coverings: Sheet aluminium; and/ or in-situ concrete slab with special "Green" roof; in-situ concrete with membrane and paving slab; various other details; Refer to Architect's roof drawings.

120 LIGHTNING PROTECTION SYSTEM GENERALLY.

- System manufacturer: Submit proposals.
  - Registration: A member of the Association of Technical Lightning and Access
    Specialists (ATLAS).
- External LPS type: Submit design and cost proposals.
- Internal LPS: Submit design and cost proposals.
- Protection against explosive or highly flammable contents: Not required.
- Protection of electrical and electronic systems: Required.
- Air termination system:
  - Air terminals;
  - Copper tape;
  - Use roof covering; and
  - Submit design and cost proposals.
- Down conductors:
  - Copper tape concealed behind cladding;
  - Use superstructure; and
  - Submit design and cost proposals.
  - Lateral connections: Submit proposals.
- Earth termination system:
  - Earth rods;
  - Ring earth electrode;
  - Use substructure; and
  - Submit design and cost proposals.
- Accessories:
  - Earth rod inspection pits;
  - Notices and labels;
  - Soil conditioning agents;
  - Surge protective devices as section Y67; and
  - Submit design and cost proposals.
- Completion:
  - Electrical identification: As section V80.

SYSTEM PERFORMANCE

210 DESIGN

- Standards: To BS EN 62305-2, BS EN 62305-3 and BS EN 62305-4.
- Design: Complete the design of the lightning protection system.
- Class of LPS to BS EN 62305-2: I.
- Coverage of LPS: External and Internal.
- Internal equipment to be protected: Incoming services; all electrical systems; all electronic equipment; fire alarm system; tv and radio distribution; access control, CCTV and security systems; intruder alarm systems; public address systems; nurse call systems; data and telephone systems .
- Proposals: Submit drawings, technical information, calculations and manufacturers' literature.

PRODUCTS

310 AIR TERMINALS GENERALLY.

- Standard: To BS EN 50164-2.
- Manufacturer: System manufacturer .
  - Product reference: Board's choice.
- Material: Copper.
- Type: Board's choice.
- Size: Board's choice.

340 COPPER TAPE GENERALLY.

- Standards: To BS EN 13601 and BS EN 50164-2.
- Manufacturer: System manufacturer .
  - Product reference: Board's choice.
- Size: Board's choice.
- Cover: PVC where exposed to view (e.g. roof).
  - Colour: Board to submit proposals for agreement with Architect.

370 EARTH RODS GENERALLY

- Standards: To BS EN 50164-2 and ENA Technical Specification 43-94 and in accordance with BS 7430.
- Type: Threaded copperbond rods.
- Manufacturer: System manufacturer .
  - Product reference: Board's choice.
- Size:
  - Diameter: Board's choice.
  - Length: Board's choice.

390 RING EARTH ELECTRODES GENERALLY.

- Standards: To BS EN 13601 and BS EN 50164-2.
- Material: Bare copper tape.
- Manufacturer: System manufacturer.
  - Product reference: Board's choice.
- Tape size: Board's choice.

410 CONNECTION COMPONENTS

- Standard: To BS EN 50164-1.
- Manufacturer: System manufacturer.
  - Product reference: Board's choice.

- Lightning current withstand classification: Class H.
- Material: Match conductor material.

415 EARTH ROD INSPECTION PITS
- Type: Concrete.
- Manufacturer: Board's choice.
  - Product reference: Board's choice.
- Load rating (minimum): Board's choice.
- Identification: Permanently identify with the wording "EARTH ROD".

420 METALLIC DIRECT CONTACT CLIPS
- Manufacturer: Board's choice.
  - Product reference: Board's choice.
- Material: Copper and aluminium alloy.

430 NON-METALLIC DIRECT CONTACT CLIPS
- Manufacturer: Board's choice.
  - Product reference: Board's choice.
- Material: Non-brittle, UV stabilized high grade polypropylene.
  - Colour: Match tape.

440 NOTICES AND LABELS
- Material: Screen printed plastics.
- Colour:
  - Background: Board's choice.
  - Lettering: Board's choice.
- Typography:
  - Font: Board's choice.
- Size: Submit proposals.
- System notice wording: "THIS STRUCTURE IS PROVIDED WITH A LIGHTNING
  PROTECTION SYSTEM THAT IS IN ACCORDANCE WITH BS EN 62305-3 AND THE BONDING TO OTHER SERVICES AND MAIN EQUIPOTENTIAL BONDING SHOULD BE MAINTAINED ACCORDINGLY."

445 SOIL CONDITIONING AGENTS
- Type: Board's choice.

EXECUTION

630 INSTALLING LIGHTNING PROTECTION SYSTEMS
- Installation: In accordance with BS 62305-3.
- Substructure: When used as the earth terminal network measure its resistance to earth during the construction period.
- Results: Submit.

640 INSTALLING AIR TERMINALS
- Location: Board's choice.

650 INSTALLING TAPES

- Location: Down-conductors - concealed within wall cavity; Roof - exposed.
- Number of joints: Minimize.
- Contact surfaces: Clean. Coat with corrosion inhibitor.
- Bimetallic joints: Do not cross-contaminate.
- Conductors passing through roofs: Provide puddle flanges.

660 INSTALLING EARTH RODS

- Location: Board's choice.
- Rod separation: Space the rods apart by at least 1.25 times the depth of the longest rod.
- Rod alignment: Vertical.
- Couplings: Apply corrosion inhibiting paste to the threads and enclose so that rods meet at centre of coupling.
- Earth rod heads: Position below ground within 100 mm of ground level.
- Internal earth rods: Provide waterproof seals.

690 INSTALLING EARTH ROD INSPECTION PITS

- Inspection pit lid: Install flush with the finished ground surface.

700 INSTALLING RING EARTH ELECTRODES

- Earth rods: Interconnect with ring earth electrode.
- Depth: Pass below incoming services.
- Jointing method: Exothermic.

710 INSTALLING TEST JOINTS

- Location: Within earth rod inspection pit.
- Labelling: Provide a plate indicating the position, number and type of earth electrodes above each test point.

715 BONDING

- Standards: To BS EN 62305-3 and BS EN 62305-4.
- Bond the following to the lightning protection system:
  - Antennae;
  - Base of a down conductor to the main switchgear earthing terminal;
  - Base of down conductor to base of vertical steelwork in lift shaft;
  - Metal fire escape;
  - Metal flue pipe;
  - Shields of incoming services; and
  - Vertical steelwork in lift shaft to structural steelwork of building at eaves and ground levels
  - Helipad access ramp
  - Building Maintenance Access Hoist steelwork
  - Metal cladding support work.
- Bonding conductor sizes: To BS EN 62305-4.
- Locations of bonds: Board's choice.

720 DISSIMILAR METALS

- Connecting dissimilar metals: Prevent electrolytic action.

730 INSTALLING SOIL CONDITIONING AGENTS

- Location: Board's choice.

750 INSTALLING NOTICES AND LABELS

- Location: Within main switchrooms.

COMPLETION

910 INSPECTION AND TESTING

- Inspection and test: In accordance with BS EN 62305-3 and BS EN 62305-4.
- Results: Submit.
- Log book: Required.

940 DOCUMENTATION

- Operation and maintenance instructions, record drawings & test/commissioning certificates to be compatible with Zutec system
- Operation and maintenance instructions: Submit.
- Record drawings: Submit.

Y67 Transient overvoltage surge suppression devices

To be read with Preliminaries/ General conditions

PRODUCTS

310 TRANSIENT OVERVOLTAGE SURGE SUPPRESSION DEVICES FOR MAINS POWER SUPPLIES WHERE REQUIRED FOR LOW VOLTAGE DISTRIBUTION SYSTEM - MAIN LV BOARDS

- Manufacturer: Board's choice.
  - Product reference: Submit proposals.
- Standard: BS EN 61643-11 and IEEE C 62.41.
- Operating voltage and frequency (nominal): 400 V at 50 Hz.
- Operating voltage (maximum): 500 V .
- Phase arrangement: Three.
- Surge current (minimum) between any two conductors: 10 kA.
- Let-through voltage (maximum): Must not exceed the equipment transient design level (ETDL) supplied by the equipment manufacturer. Submit proposals..
- Current rating: Submit proposals.
- Thermal overload protection: Submit proposals.
- Mode of protection: Lines to earth, lines to neutral, neutral to earth.
- Protection status indicators: Full protection status
- Remote indication of status (including loss of phase/ supply): Required.
- Effect on mains power supplies during normal operation:
  - No corruption to normal mains supply.
  - No break or shutdown of mains supply.
  - No excessive earth leakage current.
- Enclosure: Within LV switchboard, or in separate enclosure adjacent. Submit proposals.

310A TRANSIENT OVERVOLTAGE SURGE SUPPRESSION DEVICES FOR MAINS POWER SUPPLIES WHERE REQUIRED FOR LOW VOLTAGE DISTRIBUTION SYSTEM - SECONDARY LV PANEL BOARDS

- Manufacturer: Board's choice.
  - Product reference: Submit proposals.
- Standard: BS EN 61643-11 and IEEE C 62.41.
- Operating voltage and frequency (nominal): 400 V at 50 Hz.
- Operating voltage (maximum): 500 V .
- Phase arrangement: Three.
- Surge current (minimum) between any two conductors: 10 kA.
- Let-through voltage (maximum): Must not exceed the equipment transient design level (ETDL) supplied by the equipment manufacturer. Submit proposals..
- Current rating: Submit proposals.
- Thermal overload protection: Submit proposals.
- Mode of protection: Lines to earth, lines to neutral, neutral to earth.
- Protection status indicators: Full protection status
- Remote indication of status (including loss of phase/ supply): Required.
- Effect on mains power supplies during normal operation:
  - No corruption to normal mains supply.
  - No break or shutdown of mains supply.
  - No excessive earth leakage current.

- Enclosure: Within secondary panelboard, or in separate enclosure adjacent. Submit proposals.

310B TRANSIENT OVERVOLTAGE SURGE SUPPRESSION DEVICES FOR MAINS POWER SUPPLIES FOR LOW VOLTAGE DISTRIBUTION SYSTEM - DISTRIBUTION BOARDS (WHERE REQUIRED)

- Manufacturer: Board's choice.
  - Product reference: Submit proposals.
- Standard: BS EN 61643-11 and IEEE C 62.41.
- Operating voltage and frequency (nominal): 400 V at 50 Hz.
- Operating voltage (maximum): 500 V .
- Phase arrangement: Three.
- Surge current (minimum) between any two conductors: 10 kA.
- Let-through voltage (maximum): Must not exceed the equipment transient design level (ETDL) supplied by the equipment manufacturer. Submit proposals..
- Current rating: Submit proposals.
- Thermal overload protection: Submit proposals.
- Mode of protection: Lines to earth, lines to neutral, neutral to earth.
- Protection status indicators: Full protection status
- Remote indication of status (including loss of phase/ supply): Required.
- Effect on mains power supplies during normal operation:
  - No corruption to normal mains supply.
  - No break or shutdown of mains supply.
  - No excessive earth leakage current.
- Enclosure: Within distribution board.

330A TRANSIENT OVERVOLTAGE SURGE SUPPRESSION FOR DATA AND TELECOM SUPPLIES - ALL DATA, COMMUNICATIONS, CCTV AND OTHER ELV CABLES ENTERING OR LEAVING THE BUILDING

- Manufacturer: Board's choice.
  - Product reference: Submit proposals.
- Standard: To BS EN 61643-21, ITU-T K20 and ITU-T K21.
- Operating voltage (nominal): To be compatible with system protected.
- Bandwidth: To be compatible with system protected.
- Operating voltage (maximum): To be compatible with system protected.
- Surge current (minimum) per signal wire: To be compatible with system protected.
- Let-through voltage (maximum): To be compatible with system protected.
- Current rating (signal): To be compatible with system protected.
- Thermal overload protection: Submit proposals.
- Mode of protection: Lines to earth, lines to lines.
- Enclosure: Submit proposals.

340 ENCLOSURES.FOR SEPARATELY MOUNTED DEVICES

- Manufacturer: Board's choice.
  - Product reference: Submit proposals.
- Ingress protection (minimum): Submit proposals.
- Material: Manufacturer's standard.
- Finish: Manufacturer's standard.
- Colour: Manufacturer's standard.

EXECUTION

620 INSTALLATION GENERALLY

- Standards:
  - To BS 7671;
  - DD CLC/TS 61643-12; and
  - DD CLC/TS 61643-22.
- Equipment: Provide electrical supplies to equipment requiring power.
- Fixings: Non-corroding and compatible with the environment where they are installed.

630 INSTALLING TRANSIENT OVERVOLTAGE SURGE SUPPRESSION DEVICES FOR MAINS POWER SUPPLIES AND DATA AND TELECOM SUPPLIES

- Point of installation: secondary panelboards and distribution boards if necessary, submit proposals.
- Transient overvoltage suppression devices: Interconnect.
- Control cables between transient overvoltage suppression devices and BMS: Interconnect.
- Interconnecting cable:
  - Cable type: Submit proposals.
  - Cable size: submit proposals.
  - Cable length (maximum): 250 mm.
  - Cable installation: Tightly bind connecting leads together.
- Fuse protection: Provide fuse protection to transient overvoltage surge suppression devices.
- Isolation: Not required.

650 LABELLING

- Electrical equipment: Labels indicating the purpose of the equipment.
- Safety signs: Install where voltages above ELV exist.
- Voltage warning notices: Label equipment where voltage exceeds 230V.
- Format: To BS 5499-5. Include warnings of the voltage present.

Specification Check / Revision Sheet

Project	**RHSC and DCN Edinburgh Hospitals**	Project Number	**G1547**
Service (s)	**Mechanical & Electrical**	Sheet	**WW AP.1.2.28 JB G1547**
Performance Specification Title	**Photovoltaic System**	Date	**August 2014**
Prepared By	**JB**	Checked By	**BR**

Revision Ref.	Date of Revision	Page N$^{o(s).}$	Revision Details	Checked By
FT	December 2013	All	Final Tender	BR
FC	July 2014	All	Update for Financial Close	JB
FC	August 2014	All	Comments Incorporated	JB

RHSC and DCN EDINBURGH
PHOTOVOLTAIC SYSTEMS

CONTENTS

1.0 GENERAL INTRODUCTION

2.0 SCOPE

3.0 PERFORMANCE SPECIFIED SYSTEMS

4.0 SPECIFIC EXCLUSIONS

5.0 INTERFACES AND DEMARCATIONS

6.0 APPLICABLE STANDARDS

7.0 DESIGN CRITERIA

8.0 LIAISON

9.0 SYSTEMS

9.1 Photovoltaic Systems

MATERIALS AND WORKMANSHIP CLAUSES

V14 PHOTOVOLTAIC SYSTEMS

1.0 GENERAL INTRODUCTION

Purpose of Document

The manufacture, supply, installation, wiring, connecting, setting to work and commissioning of the works described in this document.

This specification relates to the Low Voltage Distribution system serving the RHSC-DCN Building and the associated Energy Centre.

This specification shall be read in conjunction with all other mechanical and electrical engineering services specifications and the Architectural drawings.

Description of Project

The new facility shall re-provide services from the Royal Hospital for Sick Children, Child and Adolescent Mental Health Service and the Department of Clinical Neurosciences in a single building adjoining the Royal Infirmary of Edinburgh at Little France.

The DCN part of the Facilities will have a physical link with the existing RIE Facilities specifically with the critical care unit.

The building is generally constructed from reinforced concrete.

The basement houses FM support facilities and the main building services heat distribution centres and electrical plant rooms.

Ventilation plantrooms are generally located at roof level and level 2.

A central energy centre to the South of the hospital houses heating, CHP, standby generation, fuel storage and utility incomers.

2.0 SCOPE

The scope of work covered by this Performance Specification shall include, but not be limited to the following:-

- Photovoltaic systems
- AC/DC switchgear and associated cabling.
- Roof mounted cable containment.
- Connection to LV system in accordance with G59/2.
- Metering
- Roof mounting and fixing system including ballast.

3.0 PERFORMANCE SPECIFIED SYSTEMS

The Photovoltaic System is performance specified and this specification outlines the requirements to be met by the system.

4.0 SPECIFIC EXCLUSIONS

The following is specifically excluded from the scope of this element of the performance specification:

- Main cable containment within the building from roof level to the basement LV switchboard.
- Final connection to the LV switchboard.

5.0 INTERFACES AND DEMARCATIONS

The Project Co. specialist shall liaise with the services engineer, structural engineer and architect to ensure that his design co-ordinates with the building fabric, roof make up, electrical and mechanical services in the plant room, roof drainage outlets and gullies, lightning protection, ventilation turrets, structural elements and all other elements of the building and the installations therein. The specialist shall liaise with all relevant and interested parties regarding the design of the PV system, specification of components, the method of fixing to the roof, any impact on roof drainage outlets, penetrations through the roof for cables, point of connection to the electrical installation.

6.0 APPLICABLE STANDARDS

All elements of the works shall be designed in accordance with the requirements of current legislation, regulations and industry standards unless otherwise stated.

7.0 DESIGN CRITERIA

Drawings

Project Co. shall prepare general arrangement drawings of the Photovoltaic System coordinated with other services and building elements.

The drawings shall indicate as a minimum:

- Locations of components
- Wiring routes
- Wiring diagrams
- Cable containment provision
- Interfaces with the building and with the electrical infrastructure
- Roof mounting details
- Switchboard locations and sizes
- Any drawings necessary to satisfy the requirements of this specification as regardstechnical submittals

8.0 LIAISON

Project Co. shall include for liaison with:-

Health and Safety Professionals. As well as the Health and Safety requirements of this specification, Project Co. shall include for close liaison with Health and Safety professionals including the Hospital's Health and Safety Advisors and the CDM Co-ordinator and shall comply with the CDM Regulations and all Health and Safety regulations.

The Hospital. Project Co. shall include for liaison in conjunction with the Board with members of the Hospital's team with an interest in the planning and administration of the Photovoltaic System.

9.0 SYSTEMS

9.1 Photovoltaic System

General

For the avoidance of doubt, this is a Performance Specification. The specialist shall as a minimum:

- Proactively produce the design
- Agree and record key design decisions
- Produce installation drawings and specifications
- Submit proposals for review
- Advise on necessary liaisons with supply authorities
- Submit design proposals where required in the Materials and Workmanship clauses
- Procure, install and commission the PV systems

Array

The system shall be designed for a net area of 80m2, achieved from an array of PV panels horizontally mounted mounted onto the building roof.

The solar photovoltaic system shall consist of a number of individual panels connected in series, mounted on a proprietary fixing system. Each panel shall be made of Polycrystalline cells and shall be provided with a framework support system coordinated with the roof system. The panels shall have an efficiency no less than 14.5% understand test conditions.

The panels shall then be connected as a single or multiple string, complete with all meters and isolators, to an appropriate number of inverters, which shall be located within a dedicated GRP style enclosure at roof level within the external plant enclosures. The direct current (DC) electricity generated fed into the inverter will be converted into a standard 230V / 400V alternative current (AC), which shall be feed into a dedicated LV distribution board, located within the LV switchroom at ground level. Depending on the load generated the specialist will be responsible to provide sufficient number of inverters to be able to handle the maximum generated capacity of the particular array.

The DC wiring shall be provided as high quality solar cable resistant to UV light and high temperatures. The DC strings shall be provided with all plugs and sockets required to ensure a complete and operational system. The DC cable size shall be designed by the PV specialist to suit each array.

A DC isolator shall be provided on the DC side of the inverters, located immediately adjacent to the invertors and labelled appropriately. On the AC side there shall be an AC isolator with the facility to lock off, also labelled appropriately. Each incoming DC string to each inverter will require a DC isolator and an AC isolator.

XLPE/LSF armoured cable/s shall be provided from the inverter, run on containment within the GRP enclosure, and terminated at the MCB/MCCB in the distribution board.

The array shall have a low reflectance so as not to create glare that may impact on the use of the tower roof level helipad.

Electrical equipment

The PV specialist shall provide all panelboards, distribution board, c/w incoming and outgoing MCB/MCCB circuit protection, to be located within the plantroom for the incoming AC supplies from the PV systems and the connection of the grid via an import/export meter and the utility connection.

Switchboards shall be form 4 type 2.

The system shall be installed by the specialist Board c/w all meters, isolators and G59 synchronization relays as necessary.

All metering shall be provided at the ground level within the LV switchroom, as a FIT meter for measuring the generated electricity. The metering shall be linked on a site wide BUS network for central monitoring of the side wide PV system electricity generation at the management suite.

There shall be provided a structural support system by the PV specialist together with additional framing systems required to integrate the PV system with the structural and architectural building elements. The PV Specialist shall liaise with the roof Boards, the Structural Engineer and Architect to determine the appropriate mounting and fixing type.

The PV specialist shall advise the structural engineer of loadings and wind pressure, and shall incorporate suitable fixings to ensure a structurally sound integrated installation.

All systems, inclusive of any framing, shall be earthed and bonded to the lightning protections systems at roof level and surge protection devices shall be provided at each distribution board.

All PV panels shall be fully accessible for maintenance purposes.

Refer to specification WW-532-201 Low Voltage Distribution.

Refer to specification WW-532-247 Common Electrical Materials and Workmanship Clauses for clauses relating to Low Voltage Cabling, Electrical Identification, Conduit, Trunking and Ducting, Cable Supports and Electrical Accessories.

V14 Photovoltaic systems

GENERAL

110 GRID CONNECTED PHOTOVOLTAIC SYSTEM

- Located on the roof.

- System manufacturer: Microgeneration Certification Scheme accredited.
- PV modules: Required.
  - Mounting: Proposals to be submitted including earthing as required.
- By-pass diodes: Required.
- String fuses: Required.
- Blocking diodes: Required.
- d.c. switchboard: Submit design proposals.
- d.c. isolation switches: Submit design proposals.
- Junction boxes to connect parallel arrays: Required.
- Power conditioning units (PCUs): Required.
- a.c. switchboards: Submit design proposals.
- a.c. isolation switches: Submit design proposals.
- Energy meters: Required.
- Cable type: Submit design proposals. LSF insulation required. - Sizes: Submit design proposals.
- Rewireable installation: Required.
- Concealed installation: Required.
- Cable containment: Submit design proposals. Containment shall be galvanised steel.
- Ensure cables are protected from the heating and UV effects of direct sunlight.
- Lightning protection: Submit design proposals, make provision for bonding to lightning protection system.
- Transient over-voltage surge suppression devices: Submit design proposals.
- Accessories: Submit design proposals.

SYSTEM PERFORMANCE

210 DESIGN

- Design: Complete the design of the photovoltaic system.
- Standards: To IEC 60364-7-712, to BS 7671, to BS EN 62124 and in accordance with BS 6399-2, ER G59/2-1 and ER G83/1-1.
- Testing and commissioning: Incorporate adequate measures to allow full testing and commissioning of the completed system.
- Proposals: Submit drawings, technical information, calculations and manufacturers' literature.
- Approvals: Obtain written approval of the Electricity Distributor and Obtain planning approval from the relevant authorities.

230 ELECTRICAL ARRANGEMENT

- Arrangement: Submit proposals. Submit wiring diagrams. Submit proof of compliance with BS7671.

240 PHOTOVOLTAIC ARRAYS

- PV array: Inter-connect modules to form an array.
  - Nominal output:
    Power: nominal output of total array.
    Voltage: Submit proposals.
    Current: Submit proposals.

PRODUCTS

310 PHOTOVOLTAIC MODULES

- Standard: Submit proposals.
- Manufacturer: Microgeneration Certification Scheme accredited.
  - Product reference: Submit proposals.
- Type: Framed modules.
- Colour: Submit proposals – liaise with architect.
- Module interconnections: Submit proposals.
  - Module connectors: Suitably rated for the applicable d.c. voltage and current.
  - Protection to BS EN 61140: Class II.
  - Degree of ingress protection to BS EN 60529: Submit proposals.
  - Safety labelling: "Danger, do not disconnect under load. Isolate a.c. supply at inverter first".
- Module rating: submit proposals.
- Nominal output of module:
  - Power : submit proposals.
  - Voltage: Submit proposals
  - Current: Submit proposals
- Output warranty: 80% power output after 25 years.
- Framework material: Submit proposals.

315 MOUNTING FRAMEWORK

- Manufacturer: Submit proposals.
  - Product reference: Submit proposals.

320 BY-PASS DIODES

- Manufacturer: Submit proposals.
  - Product reference: Submit proposals.
- Type: Submit proposals.
- Minimum rating: 1.25 x string short circuit current, and 1.15 x string open circuit voltage.

330 STRING FUSES

- Standard: To BS EN 60269-1.
- Manufacturer: Submit proposals.
  - Product reference: Submit proposals.
- Type: Submit proposals.
- Minimum rating: Submit proposals.

340 BLOCKING DIODES

- Manufacturer: Submit proposals.
  - Product reference: Submit proposals.
- Type: Submit proposals.
- Minimum rating: 1.25 x string short circuit current, and 2 x string open circuit voltage.

350A D.C. JUNCTION BOXES

- Standard: Submit proposals.
- Manufacturer: Submit proposals.
  - Product reference: Submit proposals.
- Material: Non-conductive.
- Degree of protection to BS EN 61140: Class II.
- Degree of ingress protection to BS EN 60529: Submit proposals.
- Separate positive and negative junction boxes: Required.
- Bus bar rating: submit proposals.
- Removable string fuses: Submit proposals.
  - Fuse rating: Submit proposals.
- String isolators: Submit proposals.
  - Type: Double pole switch-disconnector.
  - Rating: Submit proposals.
- Test points: Incorporate.
- Labelling:
  - Identification labels: "PV array junction box".
  - Safety labels: "Danger, contains live parts during daylight".

380 D.C. BATTERY CHARGE CONTROLLERS

- Standards: To pr EN 50314-1, pr EN 50314-2 and pr EN 50314-3.
- Manufacturer: System manufacturer.
  - Product reference: Submit proposals.
- Type: Pulse width modulation (PWM).
- Rating: Submit proposals.
- Degree of ingress protection to BS EN 60529: submit proposals.
- Accessories:
  - Battery temperature compensation;
  - Discharge control;
  - Overcurrent protection;
  - Reverse polarity protection;
  - State of charge display; and
  - Surge protection.

385 ENERGY METERS

- Manufacturer: Submit proposals.
  - Product reference: Submit proposals.
- Standard: To BS EN 62052-11.
- Ofgem accreditation: Required.

410 POWER CONDITIONING UNITS

- Standards:
  - To BS EN 61000-3-2;
  - To BS EN 61727;
  - In accordance with ER G59/2-1; and
  - In accordance with ER G83/1-1.

- Manufacturer: Submit proposals.
  - Product reference: Submit proposals.
- Degree of ingress protection to BS EN 60529: submit proposals.
- Degree of protection to BS EN 61140: Class II.
- Number required: Submit proposals.
- Arrangement: String inverters.
- Ratings (kW): Submit proposals.
- Input voltage: Submit proposals.
- Output: Three phase and neutral 400/230 V.
- Isolating transformer to BS EN 61558-1: Incorporate in PCU.
- Maximum power point tracker (MPPT): Incorporate in PCU.
- Electricity grid utility interface: Incorporate in PCU.

EXECUTION

620 INSTALLATION GENERALLY

- Installer: Microgeneration Certification Scheme accredited.
- Installation: Submit method statement.
- Standards:
  - To BS 7671.
  - In accordance with ER G59/2-1;
  - In accordance with ER G83/1-1; and
  - To IEC 60364-7-712.
- Materials: Separate dissimilar metallic materials to prevent bi-metallic corrosion.
- Fixing equipment: Fix independently of any other systems installation with zinc electroplated fasteners indoors and stainless steel fasteners outdoors.
- Location of equipment: Conveniently accessible for operation inspection and maintenance.

630 INSTALLING PV ARRAYS

- Standards:
  - To AAMA 501.2-03
  - To BS 5534
  - To BS 7671
  - To BS 8200
  - To BS EN 12154
  - To BS EN 60900
  - To BS EN 60903
  - To BS EN 61140
  - HSE HSG33; and
  - IEC 60364-7-712
- Safety: Use insulated tools, gloves and insulated matting. Only undertake external work in dry weather.
- Location: As drawings.
- Fixings: Suitable for wind loading.
- PV modules: Interconnect.
- Ventilation of PV array: Submit proposals.
- Interconnecting string cable routes: Submit proposals.

640 FRAMEWORK FOR MOUNTING MULTIBOX ASSEMBLIES

- Arrangement and fixings: Submit proposals.
- Treatment to cut metalwork, fasteners and fixings: Zinc-rich paint to BS 4652.
- Paint thickness: At least that of original layer.

650 INSTALLING COMPONENTS

- Location: Submit proposals.

670 INSTALLING A.C. ISOLATION SWITCHES

- Location:
  - Next to power conditioning unit;
  - Next to point of connection to a.c grid; and
  - Submit proposals.

675 INSTALLING D.C. ISOLATION SWITCHES

- Location: Next to power conditioning unit.

680 INSTALLING A.C. SWITCHBOARDS

- Location: Submit proposals.

685 INSTALLING D.C. SWITCHBOARDS

- Location: Submit proposals.

730 INSTALLING POWER CONDITIONING UNITS

- Location: Submit proposals.
- Ventilation: Provide.

740 INSTALLING ENERGY METERS

- Location: Submit proposals.
- Meters to show:
  - a.c. output of complete PV system;
  - d.c. output of each string; and
  - d.c. output of total PV array.
- Digital metering equipment: Connect to building management system.

750 INSTALLATION OF TRANSIENT OVER-VOLTAGE SURGE SUPPRESSION DEVICES

- Location: Submit proposals.

760 CONNECTION TO ELECTRICITY DISTRIBUTION NETWORK

- Standards: In accordance with ER G59/2-1.
- Location: Submit proposals.

770 INSTALLING INTERCONNECTING CABLES

- Cable routes: Submit proposals.
- Point of connection to a.c. grid: Spare way in local distribution board.
- d.c. cabling: Complete before installing PV array.

780 EARTHING AND EQUIPOTENTIAL BONDING

- Standards: To BS 7671, BS 7430, BS EN 62305-3 and BS EN 62305-4.
- Earthing of d.c. section of the system: Not required.

790 CONNECTION TO LIGHTNING PROTECTION SYSTEM

- Standard: To BS 6651.

COMPLETION

910 GRID CONNECTION

- Standards: In accordance with ER G59/2-1.
- Electricity Distributor's approval to operate: Obtain.

920 LABELLING

- Dual supply warning notices (grid connected systems only): Provide danger warning notices stating that the system has a dual supply and is energized from more than one source.
  - Location: PV a.c. isolation switch.
  - Electricity Distributor's approval of text: Obtain.
- PV modules: Label with warning notices describing the presence of live terminals.
- a.c. isolation switches: Label with notices stating "PV system - Point of emergency switching".
- Circuit diagram: Provide at point of interconnection.
- Details of protective settings incorporated in the PCU: Provide at point of interconnection.
- Contact telephone number for the maintainer of the system: Provide at point of interconnection.
- Fuses, terminal blocks and other assembly components: Label describing their purpose.
- Spare fuses: Label, describe their rating and purpose.

930 CLEANING AND GENERAL INSPECTION

- Dust and debris: Remove.
- PV array: Inspect for damage.
- Enclosures: Inspect.
- Earthing: Verify.
- Cable terminations: Inspect.
- Inspection report: Submit.
- Installation checklist in accordance with Appendix C of the DTI report Photovoltaics in buildings -testing commissioning and monitoring guide: Submit.

940 TESTING AND COMMISSIONING GENERALLY

- Standards:
  - To AAMA 501.2-83;
  - To BS 7671;
  - In accordance with ER G59/2-1; and
  - In accordance with ER G83/1-1.
- Method statement: Submit.
- Approval: Obtain written approval of the Electricity Distributor.
- Specialist commissioning engineer: Employ.
- Test equipment calibration certificates: Submit.
- Inspection and testing of electrical system: To BS 7671 and In accordance with

- Electricity Distributor requirements.
- Test for water tightness (for facades and roofing): Not required.
- Pre-commissioning checks: Undertake.
- Witnessing of testing and commissioning: Required.
- Notice before testing and commissioning: 7 days.

950 PRE-GRID CONNECTION COMMISSIONING TESTS

- Inspection and testing of electrical system: To BS 7671 and In accordance with Electricity Distributor requirements.
- PV array performance test: Undertake.
- Test conditions: Minimum irradiation level 600 W/m².
- Controls: Check operation.

960 DOCUMENTATION

- Type test certificates: Submit.
- Factory test results: Submit.
- Site test results and system performance analysis: Submit.
- System commissioning completion certificate: Submit.
- Operation and maintenance instructions: Submit.
- Record drawings: Submit.
- Approval of Electricity Distributor (grid connected systems only): Submit.
- Warranty for system: Submit.
- Microgeneration Certification Scheme: Submit certificate.

970 SPARES AND CONSUMABLES

- Supply the following spares:
  - Deliberately operated devices: 2 of each type and Protective switches.

Specification Check / Revision Sheet

Project	**RHSC and DCN Edinburgh Hospitals**	Project Number	**G1547**
Service (s)	**Mechanical & Electrical**	Sheet	**WW AP.1.2.30 JB G1547**
Performance Specification Title	**Lighting Installation**	Date	**August 2014**
Prepared By	**JB**	Checked By	**PM**

Revision Ref.	Date of Revision	Page N$^{o(s).}$	Revision Details	Checked By
FT	December 2013	All	Final Tender	PM
FC	July 2014	All	Update for Financial Close	JB
FC	August 2014	All	Comments Incorporated	JB

RHSC and DCN EDINBURGH
LIGHTING INSTALLATION

CONTENTS

1.0	GENERAL INTRODUCTION
2.0	SCOPE
3.0	SPECIFIC EXCLUSIONS
4.0	INTERFACES AND DEMARCATIONS
5.0	APPLICABLE STANDARDS
6.0	DESIGN CRITERIA
7.0	LIAISON
8.0	LIGHTING INSTALLATIONS

MATERIALS AND WORKMANSHIP CLAUSES

V50	General Lighting Systems
V51	Automatic Lighting Controls
V55	Self-Contained Emergency Lighting and Signage Systems
V59	Luminaires and Lamps
V60	Electrical Lighting Systems

APPENDICES

A	LIGHITNG CONTROL SCHEDULE

1.0 GENERAL INTRODUCTION

Purpose of Document

The manufacture, supply, installation, wiring, connecting, setting to work and commissioning of the works described in this document.

This specification relates to the Low Voltage Distribution system serving the RHSC-DCN Building and the associated Energy Centre.

This specification shall be read in conjunction with all other mechanical and electrical engineering services specifications and the Architectural drawings.

Description of Project

The new facility shall re-provide services from the Royal Hospital for Sick Children, Child and Adolescent Mental Health Service and the Department of Clinical Neurosciences in a single building adjoining the Royal Infirmary of Edinburgh at Little France.

The DCN part of the Facilities will have a physical link with the existing RIE Facilities specifically with the critical care unit.

The building is generally constructed from reinforced concrete.

The basement houses FM support facilities and the main building services heat distribution centres and electrical plant rooms.

Ventilation plantrooms are generally located at roof level and level 2.

A central Energy Centre shall be provided to the South of the hospital housing heating, CHP, standby generation, fuel storage and utility incomers.

2.0 SCOPE

The scope of work covered by this specification shall include, but not be limited to the following:-

- Lighting installation
- Emergency lighting installation
- Metal encased prefabricated wiring system
- Automatic lighting controls
- Emergency lighting automatic test system

3.0 SPECIFIC EXCLUSIONS

The following is specifically excluded from the scope of this elements of the specification:-

- Lighting calculations and luminaire selection, refer to Performance Specification WW-541-248
- Helipad lighting (by Project to Specialist)

4.0 INTERFACES AND DEMARCATIONS

The emergency lighting test system shall be integrated with a host Internet Protocol Network which shall support communication, interaction, data transfer and data retrieval from and between the various engineering systems in the building. The emergency lighting test shall be connected to the host network via gateways. The Building Management System (BMS) shall be provided with a Graphical User Interface which shall permit the interrogation of the emergency lighting test system down to component level. It is not intended that the BMS shall control the system but rather shall monitor component status and provide fault alarm indication at the Graphical User Interface.

5.0 APPLICABLE STANDARDS

All elements of the works shall comply with the requirements of current legislation, regulations and standards stated in materials and workmanship clauses.

The general lighting system shall comply with CIBSE Code for Interior Lighting BSEN12464-1, CIBSE Lighting Guide 2 ‘Hospitals and Health Care Buildings’, CIBSE LG3, LG7 & LG11, BS4533, SHTM06-01 and Table 1 (and it's accompanying notes) of the ILE Guidance notes for the reduction of obtrusive light - 2011,.

The emergency lighting system shall comply with BSEN 1838, BSEN 50171, BSEN 50172, BS 5266-1, BS 5266-8, relevant European Directives, BS 7671, CIBSE Lighting Guide for Lighting in Hospitals and Healthcare Premises (LG2) & LG 12, , CIBSE technical memorandum TM12, SHTM 06-01, BSEN 12464-1.

6.0 DESIGN CRITERIA

Electricity Supply Characteristics

LV power characteristics: 400/230 V, 3-phase, 50 Hz, 230 V, 1-phase, 50 Hz.

7.0 LIAISON

Project Co. shall include for liaison with:-

Health and Safety Professionals. As well as the Health and Safety requirements of this specification, Project Co. shall include for close liaison with Health and Safety professionals including the Hospital’s Health and Safety Advisors and the CDM Co-ordinator and shall comply with the CDM Regulations and all Health and Safety regulations.

8.0 LIGHTING INSTALLATION

8.1 Lighting

Wiring

The distribution board ways allocated to internal lighting shall be indicated on the distribution board schedules. Lighting circuitry and switching details shall be shown on the design drawings. Lighting circuits shall be wired by means of 2.5 mm^2 LSZH thermosetting insulated single core copper conductors with 2.5 mm^2 earth, protected by 10 A Type C mcbs. Circuit breakers shall be selected to withstand the fault levels indicated on LV schematic diagrams. The only exception to this rule is that examination lamps and circuits serving bath and shower room lighting shall be protected by means of 10A, 30mA RCBOs; affected circuits are clearly identified on the drawings.

The residual current characteristic these RCBOs shall be A type (not to be confused with type A, B, C, D overcurrent characteristic of MCBs and RCBOs).

Refer to Common Electrical Clauses WW AP.1.2.2 Clause V32 for cable specifications.

A and B side cables shall be run in separate containments.

The wiring system shall generally be a metal encased prefabricated wiring system. Armoured flexible conduits shall be laid on wire cable baskets. Refer to accompanying clause V50.

The electrical containment drawings indicate routes and sizes of wire cable baskets for metal encased prefabricated wiring. The Board's prefabricated wiring system provider shall inspect the drawings and confirm the adequacy of the wire cable baskets shown.

An exception to the above is lighting in areas with inaccessible ceilings, such as in Theatre suites, in which case the wiring and conduit system shall be by means of the 'loop-in' system where access to wiring shall be at accessories and luminaires only.

Through access luminaires which shall permit services access into the ceiling void through the body of the luminaire are to be installed in the following areas with Category 1 ceilings (ceiling categories as per the ADB Room Data Sheets)

i) Operating theatres
ii) Anaesthetic rooms

Installation Requirements

Final luminaire locations shall be indicated on the reflected ceiling plans.

Flush-mounted modular luminaires, which are to be installed in exposed grid suspended ceilings, shall generally be supported by the ceiling grid. Where a concealed suspended ceiling is used, support brackets shall be provided by the luminaire manufacturer to suit the specified ceiling grid construction.

Luminaires to be installed recessed in suspended non-modular plasterboard or similar ceilings shall generally be supported by the ceiling, with suitable fixings to suit the specified ceiling grid construction.

Recessed luminaires shall be tied back to the soffit to prevent fall.

Surface-mounted luminaires mounted on suspended ceilings shall be supported from the ceiling grid using methods appropriate for the type of ceiling and the particular luminaire.

Luminaires which are smaller than the ceiling grid module shall be mounted on the ceiling tiles using a suitable non-combustible backing board (provided and cut by ceiling Board).

Project Co. shall ensure that the ceiling installer is made aware of the weights and positions of luminaires so that adequate supports and trimmers can be provided. Heavy luminaires that exceed the maximum weight limits of the ceiling type used shall be supported from the soffit.

Lamps, Diffusers and Louvres

Luminaires shall be supplied complete with lamps, louvres and diffusers attachments, as specified in the Luminaire Schedule. All prismatic diffusers shall be of the TP(a) type.

Lamps shall be as specified in the Luminaire Schedule.

The luminaire schedule indicates luminaires which shall be fitted with lamps with a colour rendering index Ra ≥90. All other lamps shall have a colour rendering index Ra ≥ 85.

Illuminated Warning Signs

Refer to clauses 405A & 405B in Materials & Workmanship section V59.

Illuminated warning signs shall be provided as detailed in the equipment schedule.

Laser and x-ray warning lights shall be interfaced with the laser/x-ray machines.

The mounting heights/locations shall be installed in strict accordance with the drawings, wall elevations and manufacturer requirements.

The wording on the illuminated signs shall be as detailed on the Room Data Sheets unless advised otherwise by manufacturer.

Theatre Operating Table Luminaires

Refer to equipment schedule for details.

The mountings shall be supported off the structural soffit, which is reinforced concrete. In particular, the positional, height and levelling requirements of the mounting stem shall be fully complied with. The height and levelling (vertical and horizontal) are particularly important in order to allow proper operation. Project Co. shall either employ the operating light specialist to install the stems for all operating lights, or shall have the installation monitored and verified by the operating light specialist to ensure that all such requirements are complied with.

Power supply units for the luminaires shall be located in theatre plant room. The luminaires shall incorporate a no-break battery backup of 3-hour duration. Batteries shall be VRLA with a life expectancy of 10 years. Conduit wireways to each luminaire shall be provided for camera cabling.

Plantroom Lighting

Final mounting heights and layout shall suit final plantroom layouts.

Examination Lights

Refer to equipment schedule for details. The mountings shall be supported off the structural soffit, which is reinforced concrete. The mounting stems of ceiling-mounted lights shall be installed in strict accordance with the specialist supplier/manufacturer's instructions, especially concerning heights and levels (vertical and horizontal). The luminaire supplier shall confirm fixing details and structural loads for approval.

Automatic Lighting Control

A global automatic lighting control system shall be installed which through the means of automatic controls shall make use of available daylight where described elsewhere in this specification, regulate lighting levels, monitor luminaires for lamp failure and permit easy reconfiguration.

The automatic lighting control system shall be run over the KNX BMS system and all components used shall be KNX/DALI compatible.

The system shall include a head end in the security room which shall provide the ability to control, monitor and schedule lighting.

The following paragraphs the automatic lighting control philosophy within various areas, refer also to the lighting control schedule in Appendix B.

<u>Absence Detection where Indicated on the Drawings.</u>

Manual switching shall be provided to turn lighting "ON" and "OFF". In addition, automatic presence detectors shall be provided in these areas for switching "OFF" lighting when areas are unoccupied. Presence detectors shall not switch lighting on. Automatic presence detectors shall be provided with adjustable time delay and shall be set to 10 minutes.

In general absence detection will be required to:

- Offices
- Consulting rooms
- Interview rooms,

Further guidance is provided in Appendix B.

The sequence of operation shall be:-

i) Operation of manual switch at entrance to room shall turn lighting “ON”.

ii) Subsequent operation of manual switch whilst lighting is illuminated shall switch lighting OFF.

iii) After a predetermined unoccupied period (achieved by the adjustable time delay on automatic presence detector) the automatic presence detector shall switch lighting “OFF”.

The above shall require switching of the momentary retractive type.

Presence Detection where Indicated on the Drawings

Automatic presence detectors only shall be provided for switching lighting “ON” when areas are occupied and switching lighting “OFF” when areas are unoccupied. No light switches shall be provided in these rooms. Automatic presence detectors shall be provided with adjustable time delay which shall inhibit the extinguishing of luminaires for a predetermined period. The time delay shall be set to 20 minutes.

In general presence detection will be required to:

- Bedroom En-Suites
- Store rooms
- Linen cupboards
- Toilets
- Bathrooms
- Ward kitchens/pantries
- Plant rooms (see lighting control matrix)
- Services risers/cupboards
- Shower rooms
- Changing rooms
- Departmental corridors and hospital streets (but see below)

Further guidance is provided in Appendix B.

The sequence of operation shall be:-

i) Upon entrance to room and whilst the room is occupied the automatic presence detector shall turn lighting “ON”.

ii) Upon exit from the room and whilst the room is unoccupied after a predetermined unoccupied period (achieved by the adjustable time delay timer on automatic presence detector) the presence detector shall switch the lighting “OFF”.

The presence detection in the departmental corridors and hospital streets shall be configured such that after a predetermined unoccupied period the presence detection shall regulate the lighting to 50% on schematic of normal output rather than 0% (i.e. the space is always illuminated).

Atrium Lighting Control

The lighting within the atrium will be automatically controlled as detailed in the section above.

Ceiling mounted automatic presence detectors shall be located within the occupied areas and shall control the lighting in the detection areas.

The lighting control system within the Atria shall be configured to permit different lighting 'scenes' as detailed by the lighting designer and agreed with the Board.

Note that the luminaires delivering the lighting within the Atrium comprise a mix of different forms of control gear such as DALI, 1-10V, & HF ballasts therefore provision shall be made to ensure all luminaires can be switched by the same action.

Daylight Linking

In rooms provided with automatic absence detection and which benefit from natural daylight, luminaires near the windows shall be automatically dimmable, regulated by the amount of daylight available. Any deviation from this shall require prior agreement with the Board. Combined presence/daylight sensors shall be utilised to achieve this requirement and shall directly switch/regulate the luminaires. Manual override of automatic dimming is not required. This does not apply to departmental corridors or hospital streets.

The sequence of operation shall be as follows:-

i. Unoccupied room, lights "off".
ii. Person enters room – makes decision not to turn on lighting. Lights remain off, regardless of daylight availability.
iii. Person enters room- makes decision to turn on lighting. Press retractable light switch(es) – luminaires "on".
iv. Daylight sensor checks available light and regulates luminaires nearest window to achieve a preset lux level. Luminaires shall not be regulated to less than 10% of their normal output. (This is to reassure occupant that luminaires are not defective.)
v. As daylight fluctuates luminaire output shall be adjusted (after pre-set time delay).
vi. Person leaves room – manually extinguishes lighting. In the event that person does not manually extinguish lighting after a predetermined unoccupied period all lighting shall be switched off.

Note that the daylight linking system does not interface with the blinds. If the blinds are closed, no benefit can be had from natural daylight therefore the lights will not dim automatically.

Daylight Control of Bedroom Lighting

Bedrooms will not be provided with movement detectors, however the luminaire nearest the window shall be daylight controlled as follows:

An external light sensor shall be fitted to each face of the ward accommodation to control appropriate luminaires.

The mode of operation shall be as follows:

- It shall not be possible to switch on the controlled luminaire nearest the window if there is sufficient daylight.
- When there is insufficient daylight it shall be possible to switch on the controlled luminaire manually.
- The external light sensor shall not automatically switch on the luminaire.
- When there is sufficient daylight the light sensor shall automatically switch off the luminaire.
- A light switch shall be provided in the bedroom which shall allow the luminaire to be switched on ONLY when there is insufficient daylight available.

The above provision will be a relatively crude means of energy conservation and will require careful 'tuning' over a period of several days. The light sensors shall be adjusted so that the luminaire nearest the window in the lowest floor bedrooms cannot be switched on when the daylight available in the half of the room nearest the window reaches 100 lux average.

Further details to provide via a technical submission.

Daylight Control of Atria Lighting

The Atria lighting shall be daylight linked regulated by the amount of daylight available to achieve the illumination levels stated in the Environmental Matrix.

External light sensors shall be fitted externally to the Atria in appropriate locations. These sensors are independent of those required for the daylight control of bedroom lighting.

Ward Corridors

Ward corridors shall be provided with manual switches to permit staff to regulate light output to preset levels of 0%, 50% or 100% Refer to lighting layouts for switch locations.

Manual Switching

The lighting drawings shall indicate switching arrangements and nominal locations of lighting switches. The Architect's loaded 1:50 drawings shall be used for final locations of switches, and they shall be assessed in relation to Scottish Building Regulations.

Where several accessory plates are located together, these shall be mounted at the same height, in a horizontal row, as appropriate, unless indicated otherwise on Architects drawings.

All lighting outlet boxes shall be fitted with an earth screw terminal pillar. Accessory units shall be bonded to this terminal using green/yellow coloured LSF insulated cable in compliance with BS7671.

Light switch back boxes in imaging rooms shall be plastic.

Light switches shall be recessed within wall finishes.

Surface mounted switches shall be of the metal-clad pattern.

Plate and grid switches shall be rated at 20 A, rated for high frequency ballast / inductive load.

Pull cords shall be ceiling-mounted independently supported and provided where indicated on the lighting drawings.

Permanent labelling shall be provided on all multi-gang light switches, identifying each switch control. This shall be carried out using a proprietary labelling system.

Ward switches shall be labelled to indicate general lighting and night lighting.

Where reading lights for patient use are provided at bedheads they shall be controlled by a switch at the bedhead and at the patient handset.

Samples of the labelling system shall be provided prior to installation for approval.

Lighting switches shall be IP56 protected where indicated as splash-proof on the Room Data Sheets.

Manual Dimming

Manual dimming shall be provided in clinical areas where required for the operation of the room.

A schedule shall be provided to indicate the extent of dimmable rooms.

LED/Fluorescent luminaires, which are to be manually dimmed, shall have control gear suitable for dimming and shall be controlled by momentary retractive switches. The same switches shall provide the on/off control. All dimming shall be via digital control ranging from 1% to 100% of normal output. Luminaire dimmable control gear shall be fully compatible with the selected dimmer controllers. It shall be the responsibility of to ensure that selected dimmable high frequency control gear and dimmers shall be mutually compatible.

Consideration shall be made to the inrush current on the dimming controls when the luminaires are first switched on. Appropriate rating of the dimmer switch shall be made for this.

8.2 Emergency Lighting

General

Self-contained units shall be utilised throughout and shall be connected to an addressable emergency lighting test system to reduce the maintenance burden.

Addressable Emergency Lighting System

The system shall comprise:-

- Central control and reporting computer
- Local test panels
- Addressable emergency lighting luminaires fitted with test interface
- Hand held programmers (1 and spare)
- Networking Cabling

The central PC for the test system shall be located in the main control room in the FM department, exact location to be agreed.

Each self contained emergency lighting luminaire shall be fitted with a test interface which shall communicate with the central control PC via a control bus. Each test interface shall be allocated a unique address code.

The test system shall enable scheduling of testing so that tests are automatically carried out at a convenient time. The system shall enable groups of luminaires to be tested on a rolling schedule to minimise disruption. The system shall be configured so that no area is left without cover even immediately after a full discharge.

The system shall continuously monitor the health of all connected components and provide fault alarms within seconds.

The test system shall log failures.

The system shall provide pinpoint location of any items in need of attention.

Local test panels shall be networked and shall provide central control and reporting. Test panels shall be loaded to no more than 80% of full capacity. It is preferred that the central battery self-test system and the self-contained emergency test systems shall form an integrated networked whole.

The test system shall suit all lamp types specified.

Batteries shall be 5 year design life.

Control wiring shall be installed in accordance with the manufacturer's recommendations, with particular reference to voltage drop limitations.

The Board shall submit details of his proposed test system.

Manual Emergency Lighting System

Emergency luminaires within tenanted retail units will be tested manually by key switches. These luminaires will not be linked to the central addressable emergency lighting system. The tenant shall be responsible for the testing of their own luminaires.

External Lighting

Refer to WW-A.P.1.32 for further details.

V50 General lighting systems

To be read with Preliminaries/ General conditions.

GENERAL

110 HARD WIRED GENERAL LIGHTING SYSTEM GENERALLY

- Origin of supply: Low voltage distribution system, as section V30.
- Final circuit cabling:
  - Types: LSZH singles, as section V32.
  - Sizes: As Circuits schedule.
- Containment: Rigid conduit, as section Y60 or Trunking or ducting, as section Y60.
- Rewireable installation: Required.
- Concealed installation: Required.
- Partial installation: Not required.
- Connections to luminaires: Ceiling roses/connector.
- Luminaires and lamps:
  - Luminaire types: As section V59.
  - Lamp types:
  - Tungsten halogen lamps, as section V59;
  - Tubular fluorescent lamps, as section V59 ;
  - Two and four pin compact fluorescent lamps, as section V59;
  - Self ballasted compact fluorescent lamps, as section V59;
  - Metal halide lamps, as section V59;
  - High pressure sodium lamps, as section V59;
  - Low pressure sodium lamps, as section V59; and
  - High pressure mercury lamps, as section V59.
  - Operating voltage: Low voltage and Separated extra low voltage.
- Lighting controls:
  - Light switches, as section Y65;
  - Dimmer switches and controls, as section Y65; or
  - Separate combined daylight and occupancy detection, as section V51.
- Completion:
  - Electrical identification: As section V80.

120 GENERAL LIGHTING SYSTEM WITH PREFABRICATED WIRING GENERALLY.

- The Board shall ensure that there is at least one spare circuit available in each home run cable.

Origin of supply: Low voltage distribution system, as section V30.

- Standards

  System generally: BS 8488

  Connectors: BS EN 61535 and BS EN 61984 as appropriate

Final circuit cabling:

- Types: Prefabricated LSZH insulated singles metal encased in flexible conduit.
- Sizes: As Circuits schedule.
- Containment: Cable basket, as section Y63.
- Rewireable installation: Required.
- Concealed installation: Required.
- Partial installation: Not required.

- System components:
  - Home run cables;
  - Lighting circuit distribution boxes;
  - Lighting extender leads;
  - Luminaire connection cables;
  - Master distribution boxes;
  - Starter leads;
  - Switch connection leads;
  - Switch modules; and
  - T connector.
- Connections to luminaires: 'T' connector.
- Luminaires and lamps:
  - Luminaire types: As section V59.
  - Lamp types:
  - Tungsten halogen lamps, as section V59;
  - Tubular fluorescent lamps, as section V59 ;
  - Two and four pin compact fluorescent lamps, as section V59;
  - Self ballasted compact fluorescent lamps, as section V59;
  - Metal halide lamps, as section V59;
  - High pressure sodium lamps, as section V59;
  - Low pressure sodium lamps, as section V59; and
  - High pressure mercury lamps, as section V59.
  - Operating voltage: Low voltage and Separated extra low voltage.
- Lighting controls:
  - Light switches, as section Y65;
  - Dimmer switches and controls, as section Y65; and
  - Separate combined daylight and occupancy detection, as section V51.
- Completion:
  - Electrical identification: As section V80.

PRODUCTS

305 PREFABRICATED WIRING PRODUCTS GENERALLY

- Connectors:
  - Standard: To BS 61535 and BS EN 61984 as appropriate. Submit certification
  - Type: Board's choice.

310A CEILING ROSES/CONNECTORS

- Standard: To BS 67.
- Manufacturer: Board's choice.
  - Product reference: Board's choice.
- Rating: 6 A.
- Mounting type: Submit proposals.
- Connection type: Plug-in.
- Flex length (maximum): 3 m (unclipped to allow easy replacement).
- Colour: White.

315 HOME RUN CABLES Prefabricated wiring system.

- Manufacturer: Board's choice.
  - Product reference: Board's choice.
- Cable type: Prefabricated LSZH insulated singles metal encased in flexible conduit.
  - Number of cores: 6 or 9 circuit.
  - Size: Board's choice.
- Length: Board's choice.
- Connector arrangement: One fully shrouded male connector and one free cable end.

320 LIGHTING CIRCUIT DISTRIBUTION BOXES Prefabricated wiring system.

- Manufacturer: Board's choice.
  - Product reference: Board's choice.
- Distribution box: Galvanized sheet steel with recessed input and outgoing connections.
- Connectors:
  - Power input connection: Via prefabricated wiring and plug-in connectors .
  - Power output connector: Fully shrouded female connector.
- Outgoing connections:
  - Quantity: Board's choice.
  - Poles: Board choice.

330 LUMINAIRE SUPPORTING COUPLERS General.

- Standard: To BS 6972.
- Manufacturer: Board's choice.
  - Product reference: Board's choice.
- Rating: 6 A.
- General luminaires: White plug with white cover.
- Emergency luminaires: Red plug with red cover.
- Plug type: Rewireable, independent.
  - Pin configuration: To suit requirements for KNX/DALI system.
- Cable type: Manufacturer's standard.
  - Cable size: 0.75 mm².
- Flex length (maximum): 2 m.

335 PREFABRICATED LSZH INSULATED SINGLES IN FLEXIBLE CONDUIT

- Standards:
  - Cable: To BS 7211.
  - Flexible conduit: To BS EN 61386-23. Submit certification
- Approval: British Approvals Service for Cables (BASEC) certified.
- Manufacturer: Board's choice.
  - Product reference: Board's choice.
- Flexible thermosetting insulated single core cables (LSZH singles, H07Z-K):
  - Construction: To BS 7211, table 3b.

345 LIGHTING EXTENDER LEADS Prefabricated wiring system.

- Manufacturer: Board's choice.
  - Product reference: Board's choice.
- Cable type: Prefabricated LSZH insulated singles metal encased in flexible conduit.
  - Number of cores: Board's choice.

  - Size: Board's choice.
- Length: Board's choice.
- Connectors:
  - Arrangement: One fully shrouded male connector and one fully shrouded female connector.
  - Poles: Board choice.

350 LUMINAIRE CONNECTION CABLES Prefabricated wiring system.

- Manufacturer: Board's choice.
  - Product reference: Board's choice.
- Cable type: Prefabricated LSZH insulated singles metal encased in flexible conduit.
  - Number of cores: Board choice.
  - Size: Board's choice.
- Length: Board's choice.
- Connectors:
  - Arrangement: Board choice.
  - Poles: Board choice.

355 MASTER DISTRIBUTION BOXES Prefabricated wiring system.

- Manufacturer: Board's choice.
  - Product reference: Board's choice.
- Distribution box: Galvanized sheet steel with recessed input and outgoing connections.
- Rating: 16 A.
- Connectors:
  - Power input connection: Hard wired via home run cable.
  - Power output connector type: Fully shrouded female connector.
- Outgoing connections:
  - Quantity: Board's choice.
  - Poles: Board choice.

360 SWITCH CONNECTION LEADS Prefabricated wiring system.

- Manufacturer: Board's choice.
  - Product reference: Board's choice.
- Cable type: Prefabricated LSZH insulated singles metal encased in flexible conduit.
  - Number of cores: Board choice.
  - Size: Board choice.
- Length: Board choice.
- Connectors:
  - Arrangement: One fully shrouded male connector and one free end.
  - Poles: Board choice.

365 STARTER LEADS Prefabricated wiring system.

- Manufacturer: Board choice.
  - Product reference: Board choice.
- Cable type: Prefabricated LSZH insulated singles metal encased in flexible conduit.
  - Number of cores: Board choice.
  - Size: Board choice.
- Length: Board choice.

- Connectors:
  - Arrangement: Board choice.
  - Poles: Board choice.

370 SWITCH MODULES Prefabricated wiring system.

- Manufacturer: Board's choice.
  - Product reference: Board's choice.
- Type: Board choice.
- Cable type: Prefabricated LSZH insulated singles metal encased in flexible conduit.
  - Number of cores: Board choice.
  - Size: Board choice.
- Rating: 16 A.
- Length: Board choice.
- Connectors:
  - Arrangement: One fully shrouded male connector and one fully shrouded female connector.
  - Poles: Board choice.

375 T CONNECTORS Prefabricated wiring system.

- Standard: To BS EN 61535. Submit certification
- Manufacturer: Board's choice.
  - Product reference: Board's choice.
- Type: Board's choice.
- Cable type: Prefabricated LSZH insulated singles metal encased in flexible conduit.
  - Number of cores: Board choice.
  - Size: Board choice.
- Length: Board choice.
- Connectors:
  - 'T' arrangement: One fully shrouded male connector and one fully shrouded female connector.
  - Connection to luminaire: Fully shrouded male connector.

EXECUTION

610 INSTALLING GENERAL LIGHTING SYSTEMS

- Standard: To BS 7671.

640 LIGHTING CIRCUITS

- Rooms smaller than 4 m²: Restrict lighting circuits to one electrical phase.

650 MANUAL CONTROLS

- Location: As drawings.
- Staircases: No switching except into plant areas.

660 INSTALLING PREFABRICATED WIRING

- Connection arrangement: Form circuits using a male connector working away from any master distribution boxes.
- Fixing master/ lighting distribution boxes: Suspended from drop rods.

- Fixing cabling:
  - Maximum distance between clips:
    Prefabricated LSZH insulated singles metal encased in flexible conduit: 1500 mm.
  - Clipped in accordance with manufacturers recommendations.
  - Bends: Not permitted within 150 mm of connectors.

COMPLETION

905 TESTING AND INSPECTION OF FIXED ELECTRICAL WIRING

- Testing and inspection: To BS 7671.
- Test results: Submit.
  - Number of copies: 2.

910 TESTING AND COMMISSIONING OF GENERAL LIGHTING SYSTEMS

- Commissioning: In accordance with CIBSE Commissioning code L
- Controls: Check operation.
- Lamps: Check operation.
- Test results: Submit.
  - Number of copies: 2.

920 PHOTOMETRIC SURVEY

- Standard: In accordance with CIBSE Code for lighting.
- Locations: One sample of each room type.
- Daylight control: Full blackout.
- Average illuminance measurement method: Full grid.
- Illuminance variation measurements:
  - Diversity.
  - Uniformity.
- Measured values: Submit.
- Maintained average illuminance: Submit based upon measured values.
- Illuminance variation:
  - Diversity: Submit based upon measured values.
  - Uniformity: Submit based upon measured values.
- Survey photographs: Submit for each location.

930 DOCUMENTATION

- Operation and maintenance instructions, record drawings & test/commissioning certificates to be compatible with Zutec system
- Operation and maintenance instructions: Submit.
- Plug & play schedule of components: Submit.
- Record drawings: Submit.
  - Number of copies: 2.

V51 Automatic lighting controls

To be read with Preliminaries/ General conditions

PRODUCTS

340 PHOTOELECTRIC CONTROL UNITS External

- Standard: To BS 5972.
- Manufacturer: Board's choice.
  - Product reference: Board's choice.
- Equipment interconnectivity: Wired.
- Inductive switching capacity: 25 A.
- Minimum degree of ingress protection to BS 60529: IP56.
- Switching settings:
  - Adjustable switching time delay: Required
  - On lighting level: Adjustable.
  - Off lighting level: Adjustable.
  - Timed on: Programmable 7 day 24 h clock.
  - Timed off: Programmable 7 day 24 h clock.
- Remote setup/ override: By infrared controller
- Mounting: Outdoor.

350 INTERNAL DAYLIGHT SENSOR

- Manufacturer: Board's choice.
  - Product reference: Board's choice.
- Equipment interconnectivity: Wired.
- Daylight sensitivity: Adjustable.
- Remote setup/ override: By infrared controller.
- Mounting: Ceiling .
- Minimum degree of ingress protection to BS 60529: Board's choice.

350A EXTERNAL LIGHT SENSOR

- Manufacturer: Board's choice.
  - Product reference: Board's choice.
- Equipment interconnectivity: Wired.
- Daylight sensitivity: Adjustable.
- Remote setup/ override: Not required.
- Mounting: Outdoor and Wall .
- Minimum degree of ingress protection to BS 60529: IP44.

360 EXTRA-LOW AUTOMATIC PRESENCE DETECTORS

- Type: Microwave.
- Manufacturer: Board's choice.
  - Product reference: Board's choice.
- Equipment interconnectivity: Wired.
- Occupancy sensitivity: Adjustable.
- Remote setup/ override: By infrared controller.
- Mounting: Ceiling.
- Minimum degree of ingress protection to BS 60529: Board's choice.

370 MAINS VOLTAGE AUTOMATIC PRESENCE DETECTORS

- Manufacturer: Board's choice.
  - Product reference: Board's choice.
- Type: Microwave.
- Inductive switching capacity: 10 A.
- Occupancy sensitivity: Adjustable.
- Switching delay: Adjustable.
- Remote setup/ override: By infrared controller.
- Mounting: Ceiling .
- Minimum degree of ingress protection to BS 60529: Board's choice.

380 COMBINED PRESENCE/ DAYLIGHT SENSORS

- Manufacturer: Boards choice.
  - Product reference: Boards choice.
- Daylight sensitivity: Adjustable.
- Equipment interconnectivity: Wired.
- Occupancy sensitivity: Adjustable.
- Remote setup/ override: By infrared controller.
- Mounting: Ceiling.
- Minimum degree of ingress protection to BS 60529: Board's choice.

390 REMOTE INFRARED CONTROLLERS

- Quantity: 4.

410 CENTRAL CONTROLLERS

- Type: Microprocessor controlled.
- Manufacturer: Board's choice.
  - Product reference: Board's choice.
- Equipment interconnectivity: Wired.
- Control protocol: Digital addressable lighting interface (DALI) to BS EN 60929 Annex E.
- Inputs:
  - Combined das;
  - Daylight sensors;
  - Extra-low voltage occupancy sensors;
  - Mains voltage occupancy sensors;
  - Photoelectric control units ;
  - Remote infrared controllers; and
  - Laptop computers.
- Outputs: To building monitoring and management system, as section Y41.
- Enclosure: M's standard.
  - Minimum degree of ingress protection to BS EN 60529: IP23.
  - Material and construction: Manufacturer's standard.
  - Finish: M's standard.
- Mounting: Board's choice.

EXECUTION

610 INSTALLATION GENERALLY

- Interconnection: Interconnect sensors, controllers and luminaires.
- Positions of sensors: As drawings.

620 CABLE INSTALLATION GENERALLY

- Standard: To BS 7671.
- Timing: Do not start internal cabling until building enclosure provides permanently dry conditions.
- Cables: Install in one uninterrupted run with jointing at equipment and terminal fittings only.
  - Installation method: Submit proposals.
- Cables routes generally:
  - Concealed cable runs to wall accessories: Run vertically from the accessory.
  - Exposed cable runs: Submit proposals.
  - Cables from other systems: Segregate and cross at right angles.
  - Terminations: Support cable within 150 mm of termination.
- Balanced twisted-pair cabling:
  - Maximum untwist at terminations: 12 mm.

630 INSTALLING PHOTOELECTRIC CONTROL UNITS

- Location: Not influenced by luminaires.
- Connection: To adjacent luminaire .

640 INSTALLING DAYLIGHT SENSORS

- Location: Representative of the daylight level in the area under control.
- Connection: To adjacent luminaire .

650 INSTALLING OCCUPANCY SENSORS

- Location: To suit the occupancy pattern of the area under control. Shield from erroneous influences.
- Connection: To adjacent luminaire .

COMPLETION

910 CLEANING AND CABLE INSPECTIONS

- Detector lenses: Clean using anti static cleaning fluid.
- Cable connections: Verify.

915 LABELLING

- Equipment and sensor identification labels: Provide.
- Central controller: Label describing its purpose.
  - Output circuits: Label.

920 TESTING AND COMMISSIONING

- Commissioning: In accordance with CIBSE Commissioning Code L.
- Notice before commissioning (minimum): 14 d .
- Witnessing: Arrange for site testing to be witnessed by the contract administrator.
- Pre-commissioning checks: Undertake.
- Pre-commissioning certificate: Submit.
- Sensor settings: Submit proposals. Calibrate and commission.
- Test equipment calibration certificates: Submit.
- Operation of sensors and control devices: Check and verify. Submit results.
- System commissioning certificate: Submit.

940 SPARES AND CONSUMABLES

- Manufacturer's recommended spares: Supply one set

V55 Self-contained emergency lighting and signage systems

To be read with Preliminaries/General conditions.

GENERAL

110A SELF-CONTAINED EMERGENCY LIGHTING AND SIGNAGE SYSTEMGENERALLY

- System manufacturer: Submit proposals.
- Origin of supply: Low voltage distribution system, as section V30.
- Final circuit cabling:
  - Cable type: LSZH singles, as section V32.
  - Sizes: As Circuits schedule.
- Containment: Rigid conduit, as section Y60 or Trunking or ducting, as section Y60.
- Rewireable installation: Required.
- Concealed installation: Required.
- Partial installation: Not required.
- Connections to luminaires: Ceiling roses, as section V50.
- Emergency luminaires and lamps
  - Luminaire types: As section V59.
  - Lamp types:
  - Tungsten halogen lamps, as section V59;
  - Tubular fluorescent lamps, as section V59 ;
  - Two and four pin compact fluorescent lamps, as section V59; and
  - Self ballasted compact fluorescent lamps, as section V59.

  Test facility: Automatic test facility.

SYSTEM PERFORMANCE

PRODUCTS

320 EMERGENCY LUMINAIRES GENERALLY

- Standard: To BS EN 60598-2-22.
- Third party product certification: ICEL 1001. Submit certification
- Housing: Locate components necessary for the operation of the luminaire (including batteries, charger, lamp, and control gear) within the luminaire body.
- Indicators:
  - Charging: Green light-emitting diodes.
  - Fault: Flashing red light emitting diodes.
  - Test in progress: Flashing green light emitting diodes.
  - Position within luminaire: Readily visible. Fix to luminaire body.
- Batteries:
  - Standard: To BS EN 61951.
  - Type: Sealed nickel-cadmium.
  - Life (minimum) when operating under normal conditions at 25°C and subject to complete charge and discharge every 6 months: 4 years.
  - Labelling: Indelibly mark with year of manufacture and installation.

330 GENERAL LUMINAIRES RE-ENGINEERED FOR EMERGENCY USE

- Standards: To BS EN 13032-1 and -3.
- Third party product certification: ICEL 1004: Submit completed model test record certificate.
- Photometric data: Submit for re-engineered luminaires.

395 AUTOMATIC TEST FACILITY
- Standard: To BS EN 62034.
  - Type: PRN.
- Manufacturer: Board's choice.
  - Product reference: Board's choice.

EXECUTION

630 INSTALLATION GENERALLY
- Standards: To BS 7671 and in accordance with BS 5266-1.
- Locations: As drawings.

675 INSTALLING AUTOMATIC TEST CONTROLLER
- Location: At BMS front end.
- Interconnections with emergency luminaires: Complete.
  - Cables: Manufacturer's standard.
- Remote data transmission: Required.

678 INSTALLING LUMINAIRE AUTOMATIC TEST MODULES
- Installation: In each emergency luminaire.
  - Position: As manufacturer's recommendation.

COMPLETION

910 INSPECTION AND TESTING
- Inspection and testing: In accordance with BS 5266-1.
- Controls: Check operation.
- Full discharge test: Required. Following restoration of the normal supply verify the operation of charge indicators.
- Results: Submit.

920 EMERGENCY LIGHTING PHOTOMETRIC SURVEY
- Locations: Throughout.
- Timing: During the hours of darkness.
- Extraneous light: Minimize.
- Measured values: Submit, stating levels of extraneous light.

930 DOCUMENTATION
- Operation and maintenance instructions, record drawings & test/commissioning certificates to be compatible with Zutec system
- Documentation: In accordance with BS 5266-1.
- Certificate of testing: Submit.
  - Standard: In accordance with BS 5266-1, Annex B.
  - Number of copies: 2.
- System log book: Required.

940 CERTIFICATION FOR RE-ENGINEERED LUMINAIRES
- Certification: Submit completed ICEL 1004 model test record certificate.

V59 Luminaires and lamps

To be read with Preliminaries/General conditions.

PRODUCTS

310 LAMPS GENERALLY
- Manufacturer: As recommended by luminaire manufacturer.
- Lamps of the same type and rating: Same manufacturer.
- Fluorescent ballasts: Separate for each lamp.

320 TUNGSTEN FILAMENT LAMPS
- Not permitted

325 TUNGSTEN HALOGEN LAMPS
- Not permitted

330 TUBULAR FLUORESCENT LAMPS
- Standards:
  - Double-capped lamps: To BS EN 60081 and BS EN 61195.
- Lamp diameter: 6 mm and 16 mm.
- Colour temperature: As Luminaire schedule.
- Colour rendering index: As Luminaire schedule.

335 TWO AND FOUR PIN COMPACT FLUORESCENT LAMPS
- Standards: To BS EN 60901 and BS EN 61199.
- Types: As Luminaire schedule.
- Control gear: As Luminaire schedule.
- Colour temperature: As Luminaire schedule.
- Colour rendering index: As Luminaire schedule.

339 SELF BALLASTED COMPACT FLUORESCENT LAMPS
- Standards: To BS EN 60968 and BS EN 60969.
- Type: As Luminaire schedule.
- Colour temperature: As Luminaire schedule.
- Colour rendering index: As Luminaire schedule.

340 METAL HALIDE LAMPS
- Standards: To BS EN 61167 and BS EN 62035.
- Type: As Luminaire schedule.
- Colour temperature: As Luminaire schedule.
- Colour rendering index: As Luminaire schedule.
- Instant re-strike control gear: As Luminaire schedule.
- Integrated protective glass: As Luminaire schedule.

345 HIGH PRESSURE SODIUM LAMPS
- Standards: To BS EN 60662 and BS EN 62035.
- Type: As Luminaire schedule.
- Colour temperature: As Luminaire schedule.
- Colour rendering index: As Luminaire schedule.
- Method of starting: Internal ignitor.

350 LOW PRESSURE SODIUM LAMPS

- Standards: To BS EN 60192 and BS EN 62035.
- Colour temperature: As Luminaire schedule.
- Colour rendering index: As Luminaire schedule.

355 HIGH PRESSURE MERCURY LAMPS

- Standards: To BS EN 60188 and BS EN 62035.
- Colour temperature: As Luminaire schedule.
- Colour rendering index: As Luminaire schedule.

357 INDUCTION LAMPS

- Standards: To BS EN 61347-2-3 and BS EN 60929.
- Colour temperature: As Luminaire schedule.
- Colour rendering index: As Luminaire schedule.

360 AUXILIARY LAMPS

- Function: To provide illumination during main lamp start-up and re-strike periods.
- Lamp type: Tungsten halogen.
- Position: Integral within luminaire.
- Luminaires with auxiliary lamps: As Luminaire schedule.

370 CONTROL GEAR GENERALLY.

- Standard: To BS EN 61347-1.
- Ballasts:
  - Fluorescent lamp ballasts:

  Switched start: To BS EN 60921 and BS EN 61347-2-8. High frequency (A.C supplied): To BS EN 60929 and BS EN 61347-2-3. High frequency (D.C supplied): To BS EN 60925 and BS EN 61347-2-4.
  - Discharge lamp ballasts: To BS EN 61347-2-9 and BS EN 60923.
  - Emergency lighting ballasts: BS EN 60925 and BS EN 61347-2-7.
- Lamp starters generally: To BS EN 61347-2-1 and BS EN 60927.

385 LAMP HOLDERS FOR TUNGSTEN HALOGEN LAMPS

- Lamps<100 W: Bayonet B22d, or Edison screw E27, or Edison screw E14.
- Lamps >100 W,<200 W: Edison screw E27.
- Lamps >200 W: Edison screw E40.

390 BAYONET LAMP HOLDERS GENERALLY

- Standard: To BS EN 61184.
- Type: As Luminaire schedule.
- Material: As Luminaire schedule .
- Protective skirt: Required.
- Mounting: Suspended from ceiling rose.

391 EDISON SCREW LAMP HOLDERS GENERALLY

- Standard: To BS EN 60238.
- Material: As Luminaire schedule.
- Protective skirt: Required.
- Mounting: Suspended from ceiling rose.

392 FLUORESCENT LAMP HOLDERS

- Standard: To BS EN 60400.

395 ENCLOSURES FOR CONTROL GEAR Generally

- Manufacturer: Board's choice.
  - Product reference: Board's choice.
- Material: As Luminaire schedule.
  - Finish: Match luminaire.
  - Colour: As Luminaire schedule.
- Degree of ingress protection to BS EN 60529: Board's choice.
- Hardware: Cylinder lock and handle. Standardize key type.
- Labelling: Describe control gear purpose.

400 LUMINAIRES GENERALLY General

- Standards: To BS EN 60598-1.
- Approval: Kitemark certified.
- Photometric performance: To BS EN 13032-1.
- Supply circuit conductor connections: Screw terminals .
- Internal fuse: Required for incoming circuit phase connections.

405 LUMINAIRES general

- Manufacturer: As luminaire schedule.
  - Product reference: As luminaire schedule.
- Description: As luminaire schedule.
- Features: As luminaire schedule.
- Ballasts CELMA energy efficiency index (minimum): Manufacturer's standard.
- Control gear position: Integral within luminaire.
- Luminaire power factor: Correct to minimum 0.9 lagging.
- Lamps:
  - Number: As luminaire schedule.
  - Type to PD IEC TS 61231 to ILCOS L: As luminaire schedule.
  - Colour temperature: As luminaire schedule.
  - Colour rendering index: As luminaire schedule.
  - Rating: As luminaire schedule.

405A LUMINAIRES X-Ray, Laser, etc Illuminated Warning Signs

- Manufacturer: Submit proposals.
  - Product reference: Submit proposals.
- Legend: As ADB code.
- Mounting: Flush mounted if wall depth permits otherwise surface mounted.
- Lamp: T5 or LED.
- Control gear position: Integral within luminaire.
- Manufactured to BS EN 60598-1.
- To be switched by equipment.

405B LUMINAIRES Do Not Enter, Room In Use, etc Illuminated Warning Signs

- Manufacturer: Submit proposals.
  - Product reference: Submit proposals.
- Legend: As ADB code.
- Mounting: Flush mounted if wall depth permits otherwise surface mounted.
- Lamp: T5 or LED.
- Control gear position: Integral within luminaire.
- Manufactured to BS EN 60598-1.
- To be manually switched within room, refer to Lighting Layouts.

420 AIR HANDLING LUMINAIRES
- Standard: To BS 4533-102.19.

430 SEPARATED EXTRA-LOW VOLTAGE LIGHTING
- Standard: To BS EN 60598-2-23.

440 SEPARATED EXTRA-LOW VOLTAGE LIGHTING TRANSFORMERSGENERALLY
- Standard: To BS EN 61558.
- Type: As luminaire schedule.
- Power rating: Submit proposals.
- Output:
  - Connections: As luminaire schedule.
  - Constant secondary voltage: Maintain irrespective of load.
- Luminaire connections: As luminaire schedule.

450 LIGHTING TRACKGENERALLY
- Standard: As luminaire schedule.
- Type: As Luminaire schedule.
- Class: As luminaire schedule.
- Conductor rating: As luminaire schedule.
- Neutral rating: As luminaire schedule.
- Mounting: As luminaire schedule.

460 LUMINAIRE SMOKE HOODS
- Standard: To BS 476-21.
- Refer to Architect's Fire Strategy drawings.
- Smoke hoods and blankets: Match fire performance of building fabric.

FABRICATION

510 CUSTOM-BUILT LUMINAIRES GENERALLY
- Design and fabrication: Complete the design and fabrication of custom-built luminaires.
- Prototypes: Submit.
- Photometric data: Submit.
  - Standard: To BS EN 13032-1.

520 CUSTOM-BUILT LUMINAIRE General.
- Circumstances of use to BS EN 60598-1: As luminaire schedule.
- Electric shock classification to BS EN 60598-1: As luminaire schedule.
- Degree of ingress protection to BS EN 60529: As luminaire schedule.
- Supporting surface classification to BS EN 60598-1: As luminaire schedule.
- Luminaire light output ratio (minimum): As luminaire schedule.
- Description: As luminaire schedule.
- Features: As luminaire schedule.
- Lamps:
  - Number: As luminaire schedule.
  - Type to PD IEC TS 61231 to LICOS L: As luminaire schedule.
  - Colour temperature: As luminaire schedule.
  - Colour rendering index: As luminaire schedule.
  - Rating: As luminaire schedule.

530 PROPOSALS FOR CUSTOM-BUILT LUMINAIRES

- Content: Submit the following:
  - Overall dimensions.
  - Dimensioned general arrangement drawings, plans, elevations and sections.
  - Degree of ingress protection.
  - Mounting and fixing details.
  - Materials and component details.
  - Details of internal and external paint systems and colour finishes.
  - Means of access to consumable parts.
  - Schedule of labels.
  - Routing of cabling within luminaire.
  - Internal wiring diagrams and location of components.

EXECUTION

610 SAMPLES

- Samples: Before ordering, supply samples of the following luminaires: It is anticipated that samples of each family type shall be provided, a marked up luminaire schedule which details the sample luminaires to be agreed with BM and the Board schedule.
- Submittals: Include manufacturer's technical information with each sample.
- Identification: Label samples with the luminaire references.

620 INSTALLING LUMINAIRES AND LAMPS GENERALLY

- Standard: To BS 7671.
- Location: As drawings.
- Orientation: Parallel with ceiling.
- Lamps and accessories: Provide.
- Supports: Adequate for weight of luminaire.

630 LUMINAIRE CABLE CONNECTIONS

- Cable connection size (minimum): 1.5 mm².
- Conduit mounted: Terminate directly within luminaire.
- Trunking mounted: Terminate directly within luminaire.
- Suspended trunking: From cable connection mounted on side of trunking.
  - Type: Plug and socket outlet to BS 546.
- Rod or chain suspended: Luminaire supporting coupler.
  - Cable type: HR PVC/ PVC cord, clipped to chain or rod. Do not pass cord through chain links.
- Cable entry: Grommet.
- Class 1 earth connections: Connect to luminaire circuit protective conductor.
- Wiring within luminaires: Minimize. Clip at 300 mm intervals.

640 LUMINAIRES MOUNTED AS PART OF A SUSPENDED CEILING

- Luminaire supports: Independent suspension rods.
- Luminaire final connection: Plug and socket outlet to BS 546.
  - Mounting: Surface mounted on side of trunking.
  - Length (maximum): 2 m.

650 INSTALLING LIGHTING TRACK

- Orientation: Level with ceiling.
- Track suspensions: Flexible.

660 INSTALLING EXTRA LOW VOLTAGE LUMINAIRES general.

- Transformer location: Accessible.
- Conductor size for cables connecting transformers and luminaires (minimum): As luminaire schedule.
- Multi-point transformers:
  - Cabling to luminaire: Equal size and length.
  - Lamps: Same power rating.
  - Fixing: Secure to non-flammable materials.

670 INSTALLING CONTROLGEAR

- Location: Adjacent to luminaire.
- Fixing: Secure to building fabric.

680 INSTALLING SUSPENDED LAMP HOLDERS

- Flex length: 0.3 m.

690 INSTALLING LUMINAIRE SUPPORTS

- Support and fixing arrangement: Board's choice
- Luminaire suspensions: Vertical.
  - Multiple suspensions: Provide as necessary.
- Levelling: Adjust the length of suspensions so that luminaires are level.
  - Levelling tolerance: ± 3 mm.
- Conduit supports:
  - Size (minimum): 20 mm.
  - Type: Match cable containment.
  - Conduit boxes: Provide for each luminaire suspension point.
- Rod supports: Continuously threaded rods.
- Chain supports: Steel chain with conduit box hook and cover.
- Ball and socket: Provide as top support and fix cover to circular conduit box. Route cable from conduit box through ball and socket.
- Number of supports for luminaires longer than 600 mm (minimum):
  - Luminaire width<300 mm: 2.
  - Luminaire width >300 mm: 4.

695 INSTALLING SMOKE HOODS

- Support and fixing arrangement: Submit proposals
- Location: Where recessed luminaires penetrate fire rated ceiling. Electrical Board to refer to Fire Strategy drawings to determine locations of Fire Rated ceilings if any.

COMPLETION

910 CLEANING

- Luminaires and lamps: Clean when building works are complete.

920 TESTING AND COMMISSIONING

- Luminaires and lamps: Check operation.

930 SPARE LAMPS

- Quantity to be supplied: 5 of each type installed.
- Labelling: Label the lamps with the corresponding luminaire reference.

V60 External lighting systems

To be read with Preliminaries/ General conditions

GENERAL THIS CLAUSE RELATES TO EXTERNAL LIGHTING IN THE IMMEDIATE VICINITY OF THE HOSPITAL AND ENERGY CENTRE. ie: BUILDING MOUNTED
LUMINAIRES AND TO FOOTPATHS AROUND THE PERIMETER OF THE BUILDING.

REFER TO SPECIFICATION WW-JB-SP-532-248 FOR DETAILS OF SITE WIDE
EXTERNAL LIGHTING

120 AMENITY LIGHTING SYSTEMS GENERALLY

- System manufacturer: as luminaire schedule.
  - Product reference: as luminaire schedule.
- Electrical supply: Low voltage connection, as section V11.
- Low voltage switchgear: Cable distribution cabinet, as section V31.
- Luminaire supports: Steel lighting pedestals.
  - Painting: Factory finish.
- Concrete bases to columns/pedestals: Required.
- Luminaires: As section V59.
  - Operating voltage to BS 7671: Low voltage.
- Controls:
  - Types: Photoelectric control units, as section V51.
  - Configuration: Group.
  - Accessories: Enclosures for control gear .
- System accessories: Electrical cut outs.

130 CABLING AND CONTAINMENT Buried cables

- Cable type: Thermosetting insulated and LSZH sheathed armoured cables, as section V32.
- Containment: Buried in soft, in plastic ducts below roadways..
- Trenches, pipeways and pits: As section P30.
- Accessories: Plastics ducts for underground cables, as section V32.

PRODUCTS

340 STEEL LIGHTING PEDESTALS FOR AMENITY LIGHTING SYSTEMS

- Manufacturer: as luminaire schedule.
  - Product reference: as luminaire schedule.
- Profile: as luminaire schedule.
- Cross section: as luminaire schedule.
- Height (nominal): as luminaire schedule.
- Base: as luminaire schedule.
- Root length: as luminaire schedule.
- Mounting diameter or width (nominal) : as luminaire schedule.
- Factory finish: as luminaire schedule
  - Colour: as luminaire schedule.
- Accessories: as luminaire schedule.

400 ENCLOSURES FOR CONTROL GEAR as luminaire schedule.

- Manufacturer: as luminaire schedule.
  - Product reference: as luminaire schedule.
- Enclosure:
  - Material: as luminaire schedule.
  - Finish: as luminaire schedule.
  - Ingress protection to BS EN 60529: as luminaire schedule.
  - Hardware: Cylinder lock and handle. Standardize key type.
  - Labelling: Describe control gear purpose.

EXECUTION

620 INSTALLING ROADWAY AND AMENITY LIGHTING SYSTEMS GENERALLY

- Standard: To BS 7671.

640 INSTALLING ELECTRICAL CUT OUTS

- Location: At base of pedestals.

650 INSTALLING PHOTOELECTRIC CONTROL UNIT

- Location: As far as practical on each luminaire.

690 SETTING COMPONENTS IN EARTH

- Foundation holes: Form as small as practicable to allow refilling.
- Locating components: Accurately position, plumb and provide secure temporary support.
- Cable ducts: Connect to column cable entry slot and protect against collapse during backfilling.
- Earth for backfilling: Selected material free from stones or lumps of clay exceeding 40 mm in any direction.
- Backfilling: Refill with earth. Fully compact in 50 mm layers as filling proceeds.

750 COLUMN AND PEDESTAL LABELLING:

- Height above ground level: 1.2 m.
- Type: Glued on laminated label.
- Size of numbers and letters: Submit proposals.
  - Background to numbers and letters: white.
- Size of background: Submit proposals.

COMPLETION

910 CLEANING

- Electrical equipment: Clean immediately before handover.

920 INSPECTION AND TESTING

- Standard: To BS 7671.
- Notice before commencing tests (minimum): 24 h.
- Certificates: Submit.
  - Number of copies: 2.

930 COMMISSIONING

- Setting for control devices: Submit proposals and commission.
- Operation of control devices: Verify.
- Orientation of adjustable luminaires: Adjust to give optimum performance.

940 PHOTOMETRIC SURVEY GENERALLY

- Standard: In accordance with CIBSE Lighting guide 6.
- Locations: Around perimeter of RHSC-DCN Building.
- Time of test: Night.
- Average illuminance measurement method: Full grid .
- Measured values: Submit.
- Maintained average illuminance: Submit based upon measured values.
- Illuminance variation: Submit details.
- Environmental conditions: Submit details.
- Extraneous light: Measure and submit results.
- Test equipment: Submit calibration details.

950 DOCUMENTATION

- Operation and maintenance instructions, record drawings & test/commissioning certificates to be compatible with Zutec system
- Timing: Submit at completion.
- Contents:
  - Full technical description of each system installed.
  - Manufacturers' operating and maintenance instructions for fittings and apparatus including relamping instructions for luminaire types. Identify hazardous lamps that require specialist disposal.
  - Recommended frequency of testing and inspection, both for electrical safety, and for matters such as the corrosion and security of lighting columns and luminaire fixings.
  - Manufacturers' guarantees and warranties.
  - Record drawings showing circuits and their ratings and locations of fittings and apparatus.
  - List of normal consumable items and their sources.

960 SPARE LAMPS

- Quantity of each type to be supplied: 2.
- Labelling: Label the lamps with the corresponding luminaire reference.

APPENDIX A

LIGHTING CONTROL SCHEDULE

The following schedule has been prepared to indicate the design intent.

RHSC – DCN EDINBURGH – LIGHTING CONTROL SCHEDULE							
ROOM TYPE	**A&B CIRCUIT REQUIRED ? (IF IN DUAL CIRCUIT AREA)**	**MANUAL SWITCHING**	**MANUAL DIMMABLE CONTROL**	**PRESENCE DETECTION**	**ABSENCE DETECTION**	**DAYLIGHT LINKING**	**NOTES**
ANAESTHETIC ROOM	Y	Y	N	N	N	N	LIGHTING TO BE MANUALLY SWITCHED FROM DOOR.
ASSESSMENT ROOM	Y	Y	N	N	N	N	LIGHTING TO BE MANUALLY SWITCHED FROM DOOR AND AT THE PENDANT (WHERE APPLICABLE).
ATRIUM	Y	N	N	(SEE NOTE)	N	Y	AUTOMATIC PRESENCE DETECTORS PROVIDED FOR SWITCHING LIGHTING “ON” WHEN AREAS ARE OCCUPIED AND SWITCHING LIGHTING “OFF” WHEN AREAS ARE UNOCCUPIED. AUTOMATIC PRESENCE DETECTOR PROVIDED WITH ADJUSTABLE TIME DELAY. DAYLIGHT LINKING TO BE DEVELOPED.
BED BAY/ROOM (CRITICAL CARE/CCU)	Y	Y	Y	N	N	N	LOCAL MANUAL DIMMING CONTROL OF LIGHTING WITHIN EACH BED BAY/BEDROOM. SWITCH LOCATED AT DOOR OR PARTITION OF BAY AND AT THE PENDANT (WHERE APPLICABLE).
BEDROOM (MULTI)	Y	Y	Y	N	N	Y	GENERAL & NIGHT LIGHTING TO BE MANUALLY SWITCHED FROM DOOR, READING & NURSE EXAM LIGHTING TO BE MANUALLY SWITCHED AT THE BEDHEAD TRUNKING. READING LIGHTING TO BE MANUALLY CONTROLLED VIA THE PATIENTS HANDSET. LUMINAIRE NEAR THE WINDOWS SHALL BE AUTOMATICALLY DIMMABLE, REGULATED BY THE AMOUNT OF DAYLIGHT AVAILABLE VIA DAYLIGHT SENSOR
BEDROOM (SINGLE)	Y	Y	Y	N	N	Y	GENERAL & NIGHT LIGHTING TO BE MANUALLY SWITCHED FROM DOOR, READING & NURSE EXAM LIGHTING TO BE MANUALLY SWITCHED AT THE BEDHEAD TRUNKING. READING LIGHTING TO BE MANUALLY CONTROLLED VIA THE PATIENTS HANDSET. LUMINAIRE NEAR THE WINDOWS SHALL BE AUTOMATICALLY DIMMABLE, REGULATED BY THE AMOUNT OF DAYLIGHT AVAILABLE VIA DAYLIGHT SENSOR
CHANGING ROOM	Y	N	N	Y	N	N	AUTOMATIC PRESENCE DETECTORS PROVIDED FOR SWITCHING LIGHTING “ON” WHEN AREAS ARE OCCUPIED AND SWITCHING LIGHTING “OFF” WHEN AREAS ARE UNOCCUPIED. AUTOMATIC PRESENCE DETECTOR PROVIDED WITH ADJUSTABLE TIME DELAY.

RHSC – DCN EDINBURGH – LIGHTING CONTROL SCHEDULE							
ROOM TYPE	**DUAL CIRCUIT REQUIRED**	**MANUAL SWITCHING**	**MANUAL DIMMABLE CONTROL**	**PRESENCE DETECTION**	**ABSENCE DETECTION**	**DAYLIGHT LINKING**	**NOTES**
CLEAN /DIRTY UTILITY	Y	N	N	Y	N	N	LIGHTING TO BE CONTROLLED FROM AN AUTOMATIC PRESENCE DETECTOR PROVIDED WITH ADJUSTABLE TIME DELAY
CLEANERS ROOM	N	N	N	Y	N	N	LIGHTING TO BE CONTROLLED FROM AN AUTOMATIC PRESENCE DETECTOR PROVIDED WITH ADJUSTABLE TIME DELAY
CONSULTING ROOM	Y	Y	N	N	Y	Y	MANUAL SWITCHING TO TURN “ON” AND “OFF”. AUTOMATIC PRESENCE DETECTORS ALSO PROVIDED FOR SWITCHING “OFF” LIGHTING WHEN AREAS ARE UNOCCUPIED. SHOULD THE ROOM BENEFIT FROM NATURAL DAYLIGHT, LUMINAIRES NEAR THE WINDOWS SHALL BE AUTOMATICALLY DIMMABLE, REGULATED BY THE AMOUNT OF DAYLIGHT AVAILABLE VIA COMBINED PRESENCE/DAYLIGHT SENSORS.
CONSULTING/EXAMINATION ROOM	Y	Y	N	N	Y	Y	MANUAL SWITCHING TO TURN “ON” AND “OFF”. AUTOMATIC PRESENCE DETECTORS ALSO PROVIDED FOR SWITCHING “OFF” LIGHTING WHEN AREAS ARE UNOCCUPIED. SHOULD THE ROOM BENEFIT FROM NATURAL DAYLIGHT, LUMINAIRES NEAR THE WINDOWS SHALL BE AUTOMATICALLY DIMMABLE, REGULATED BY THE AMOUNT OF DAYLIGHT AVAILABLE VIA COMBINED PRESENCE/DAYLIGHT SENSORS.
CONTROL ROOM (IMAGING)	Y	Y	(SEE NOTE)	N	N	N	GENERAL LIGHTING WITHIN CONTROL ROOM TO BE MANUALLY SWITCHED FROM DOOR. WHERE APPLICABLE, LOCAL CONTROL OF LIGHTING (NORMAL/DIMMING) WITHIN IMAGING ROOM AS REQUIRED BY THE ROOM DATA SHEETS TO BE PROVIDED AT THE CONTROL DESK.
CORRIDOR (DEPARTMENTAL)	Y	N	(SEE NOTE)	Y	N	N	AUTOMATIC PRESENCE DETECTORS PROVIDED FOR SWITCHING LIGHTING “ON” WHEN AREAS ARE OCCUPIED AND REGULATE THE LIGHTING TO 25% OF NORMAL OUTPUT WHEN AREAS ARE UNOCCUPIED. AUTOMATIC PRESENCE DETECTOR PROVIDED WITH ADJUSTABLE TIME DELAY.
CORRIDOR (HOSPITAL STREET)	Y	N	(SEE NOTES)	Y	N	Y	AUTOMATIC PRESENCE DETECTORS PROVIDED FOR SWITCHING LIGHTING “ON” WHEN AREAS ARE OCCUPIED AND REGULATE THE LIGHTING TO 50% ON SCHEMATIC OF NORMAL OUTPUT WHEN AREAS ARE UNOCCUPIED. AUTOMATIC PRESENCE DETECTOR PROVIDED WITH ADJUSTABLE TIME DELAY.
CORRIDOR (WARD)	Y	Y	(SEE NOTES)	N	N	N	MANUAL SWITCHES PROVIDED TO PERMIT STAFF TO REGULATE LIGHT OUTPUT TO PRESET LEVELS OF 0%, 25% OR 100%.

RHSC – DCN EDINBURGH – LIGHTING CONTROL SCHEDULE							
ROOM TYPE	**DUAL CIRCUIT REQUIRED**	**MANUAL SWITCHING**	**MANUAL DIMMABLE CONTROL**	**PRESENCE DETECTION**	**ABSENCE DETECTION**	**DAYLIGHT LINKING**	**NOTES**
DINING ROOM	Y	Y	N	N	N	N	LIGHTING TO BE CONTROLLED FROM MANUALLY OPERATED WALL MOUNTED SWITCHES.
DISCHARGE LOUNGE	Y	Y	N	N	N	N	LIGHTING TO BE CONTROLLED FROM MANUALLY OPERATED WALL MOUNTED SWITCHES AT THE STAFF BASE.
DISPOSAL HOLD	Y	N	N	Y	N	N	LIGHTING TO BE CONTROLLED FROM AN AUTOMATIC PRESENCE DETECTOR PROVIDED WITH ADJUSTABLE TIME DELAY
ENSUITE	Y	N	N	Y	N	N	AUTOMATIC PRESENCE DETECTORS PROVIDED FOR SWITCHING LIGHTING “ON” WHEN AREAS ARE OCCUPIED AND SWITCHING LIGHTING “OFF” WHEN AREAS ARE UNOCCUPIED. AUTOMATIC PRESENCE DETECTOR PROVIDED WITH ADJUSTABLE TIME DELAY.
EQUIPMENT PARKING BAY	N	(SEE NOTES)	N	(SEE NOTES)	N	N	WHERE EQUIPMENT BAY IS LOCATED OFF A CIRCULATION/CORRIDOR SPACE THEN LIGHTING WILL BE CONTROLLED AS PER THE REGIME EMPLYED WITHIN THAT SPACE. WHERE EQUIPMENT BAY IS independent OF ANOTHER SPACE LIGHTING TO BE CONTROLLED FROM AN AUTOMATIC PRESENCE DETECTOR PROVIDED WITH ADJUSTABLE TIME DELAY.
EXAMINATION ROOM	Y	Y	N	N	Y	Y	MANUAL SWITCHING TO TURN “ON” AND “OFF”. AUTOMATIC PRESENCE DETECTORS ALSO PROVIDED FOR SWITCHING “OFF” LIGHTING WHEN AREAS ARE UNOCCUPIED. SHOULD THE ROOM BENEFIT FROM NATURAL DAYLIGHT, LUMINAIRES NEAR THE WINDOWS SHALL BE AUTOMATICALLY DIMMABLE, REGULATED BY THE AMOUNT OF DAYLIGHT AVAILABLE VIA COMBINED PRESENCE/DAYLIGHT SENSORS.
EXIT/PARKING BAY	Y	Y	N	Y	N	N	LIGHTING WILL BE CONTROLLED AS PER THE REGIME EMPLOYED WITHIN THE ADJACENT CIRCULATION/CORRIDORS VIA. AUTOMATIC PRESENCE DETECTORS WHICH WILL SWITC“ L”GHTING "ON" WHEN AREAS ARE OCCUPIED AND REGULATE THE LIGHTING TO 25% OF NORMAL OUTPUT WHEN AREAS ARE UNOCCUPIED. AUTOMATIC PRESENCE DETECTOR PROVIDED WITH ADJUSTABLE TIME DELAY.

RHSC – DCN EDINBURGH – LIGHTING CONTROL SCHEDULE							
ROOM TYPE	**DUAL CIRCUIT REQUIRED**	**MANUAL SWITCHING**	**MANUAL DIMMABLE CONTROL**	**PRESENCE DETECTION**	**ABSENCE DETECTION**	**DAYLIGHT LINKING**	**NOTES**
EXTERNAL LIGHTING (MAIN ENTRANCE CANOPY)	N	(SEE NOTES)	(SEE NOTES)	(SEE NOTES)	(SEE NOTES)	(SEE NOTES)	LIGHTING CONTROLLED BY EXTERNAL PHOTOCELL AND ADJUSTABLE TIME-CLOCK.
IMAGING ROOM	Y	Y	(SEE NOTES)	N	N	N	LIGHTING TO BE CONTROLLED FROM MANUALLY OPERATED ON/OFF WALL MOUNTED SWITCHES AT THE DOOR. WHERE APPLICABLE, LOCAL CONTROL OF LIGHTING (NORMAL/DIMMING) WITHIN IMAGING ROOM AS REQUIRED BY THE ROOM DATA SHEETS TO BE PROVIDED AT THE CONTROL DESK WITHIN THE ASSOCIATED CONTROL ROOM.
INTERVIEW ROOM	Y	Y	N	N	Y	Y	MANUAL SWITCHING TO TURN "ON" AND "OFF". AUTOMATIC PRESENCE DETECTORS ALSO PROVIDED FOR SWITCHING "OFF" LIGHTING WHEN AREAS ARE UNOCCUPIED. SHOULD THE ROOM BENEFIT FROM NATURAL DAYLIGHT, LUMINAIRES NEAR THE WINDOWS SHALL BE AUTOMATICALLY DIMMABLE, REGULATED BY THE AMOUNT OF DAYLIGHT AVAILABLE VIA COMBINED PRESENCE/DAYLIGHT SENSORS.
KITCHEN (INCLUDING REGEN KITCHENS)	Y	Y	N	N	N	N	LIGHTING TO BE MANUALLY SWITCHED FROM DOOR.
LABORATORY	Y	Y	N	N	N	Y	LIGHTING TO BE MANUALLY SWITCHED FROM DOOR.
LINEN CUPBOARD	N	N	N	Y	N	N	AUTOMATIC PRESENCE DETECTORS PROVIDED FOR SWITCHING LIGHTING "ON" WHEN AREAS ARE OCCUPIED AND SWITCHING LIGHTING "OFF" WHEN AREAS ARE UNOCCUPIED. AUTOMATIC PRESENCE DETECTOR PROVIDED WITH ADJUSTABLE TIME DELAY.

RHSC – DCN EDINBURGH – LIGHTING CONTROL SCHEDULE							
ROOM TYPE	**DUAL CIRCUIT REQUIRED**	**MANUAL SWITCHING**	**MANUAL DIMMABLE CONTROL**	**PRESENCE DETECTION**	**ABSENCE DETECTION**	**DAYLIGHT LINKING**	**NOTES**
LOBBY	Y	N	N	Y	N	N	AUTOMATIC PRESENCE DETECTORS PROVIDED FOR SWITCHING LIGHTING "ON" WHEN AREAS ARE OCCUPIED AND SWITCHING LIGHTING "OFF" WHEN AREAS ARE UNOCCUPIED. AUTOMATIC PRESENCE DETECTOR PROVIDED WITH ADJUSTABLE TIME DELAY.
OFFICE	Y	Y	N	N	Y	Y	MANUAL SWITCHING TO TURN "ON" AND "OFF". AUTOMATIC PRESENCE DETECTORS ALSO PROVIDED FOR SWITCHING "OFF" LIGHTING WHEN AREAS ARE UNOCCUPIED. SHOULD THE ROOM BENEFIT FROM NATURAL DAYLIGHT, LUMINAIRES NEAR THE WINDOWS SHALL BE AUTOMATICALLY DIMMABLE, REGULATED BY THE AMOUNT OF DAYLIGHT AVAILABLE VIA COMBINED PRESENCE/DAYLIGHT SENSORS.
OPERATING THEATRE	Y	Y	(SEE NOTES)	N	N	N	LIGHTING TO BE MANUALLY SWITCHED ON/OFF FROM DOOR. DIMMABLE CONTROL FOR GENERAL LIGHTING TO BE PROVIDED AS PART OF SURGEONS PANEL. CONTROL OF OPERATING TABLE LAMPS TO BE CONTROLLED FROM SURGEONS PANEL OR AT THE LAMP DEPENDING ON THE DETAILS OF LAMP INSTALLED.
OVERNIGHT STAY ROOM	Y	Y	N	N	N	N	LIGHTING TO BE MANUALLY SWITCHED FROM DOOR.
PATIENT CHANGING CUBICLE	N	N	N	Y	N	N	AUTOMATIC PRESENCE DETECTORS PROVIDED FOR SWITCHING LIGHTING "ON" WHEN AREAS ARE OCCUPIED AND SWITCHING LIGHTING "OFF" WHEN AREAS ARE UNOCCUPIED. AUTOMATIC PRESENCE DETECTOR PROVIDED WITH ADJUSTABLE TIME DELAY.
PLANT (PLANT ROOM)	Y	Y	N	N	N	N	MANUAL SWITCHING
PLANT (RISERS & ELECTRICAL CUPBOARDS – IF LIGHTING PROVIDED)	N	N	N	Y	N	N	LIGHTING TO BE CONTROLLED FROM AN AUTOMATIC PRESENCE DETECTOR PROVIDED WITH ADJUSTABLE TIME DELAY
PLAYROOM	Y	Y	N	N	N	N	LIGHTING TO BE MANUALLY SWITCHED FROM DOOR.

RHSC – DCN EDINBURGH – LIGHTING CONTROL SCHEDULE							
ROOM TYPE	**DUAL CIRCUIT REQUIRED**	**MANUAL SWITCHING**	**MANUAL DIMMABLE CONTROL**	**PRESENCE DETECTION**	**ABSENCE DETECTION**	**DAYLIGHT LINKING**	**NOTES**
PREP ROOM	Y	Y	N	N	N	N	LIGHTING TO BE MANUALLY SWITCHED FROM DOOR.
RECEPTION	Y	Y	N	N	N	N	LIGHTING TO BE MANUALLY SWITCHED FROM DOOR.
RECOVERY ROOM	Y	Y	N	N	N	N	LIGHTING TO BE MANUALLY SWITCHED FROM DOOR.
RESUSCITATION ROOM	Y	Y	(SEE NOTES)	(SEE NOTES)	N	N	LIGHTING WITHIN RESUS BAYS TO BE MANUALLY SWITCHED FROM DOOR. WITHIN RESUS AREA CIRCULATION SPACE AUTOMATIC PRESENCE DETECTORS PROVIDED FOR SWITCHING LIGHTING "ON" WHEN AREAS ARE OCCUPIED AND REGULATE THE LIGHTING TO 25% OF NORMAL OUTPUT WHEN AREAS ARE UNOCCUPIED. AUTOMATIC PRESENCE DETECTOR PROVIDED WITH ADJUSTABLE TIME DELAY.
SCRUB	Y	Y	N	N	N	N	LIGHTING TO BE MANUALLY SWITCHED FROM DOOR.
SEMINAR ROOM	Y	Y	Y	N	N	N	LIGHTING TO BE MANUALLY SWITCHED FROM DOOR.
SERVICES RISER/CUPBOARD	N	N	N	Y	N	N	AUTOMATIC PRESENCE DETECTORS PROVIDED FOR SWITCHING LIGHTING "ON" WHEN AREAS ARE OCCUPIED AND SWITCHING LIGHTING "OFF" WHEN AREAS ARE UNOCCUPIED. AUTOMATIC PRESENCE DETECTOR PROVIDED WITH ADJUSTABLE TIME DELAY.
SITTING ROOM	Y	Y	N	N	N	N	LIGHTING TO BE MANUALLY SWITCHED FROM DOOR.

RHSC – DCN EDINBURGH – LIGHTING CONTROL SCHEDULE							
ROOM TYPE	**DUAL CIRCUIT REQUIRED**	**MANUAL SWITCHING**	**MANUAL DIMMABLE CONTROL**	**PRESENCE DETECTION**	**ABSENCE DETECTION**	**DAYLIGHT LINKING**	**NOTES**
STAFF BASE	Y	Y	Y	N	N	N	LIGHTING TO BE MANUALLY SWITCHED LOCALLY. WARD CORRIDOR LIGHTING DIMMED FROM BACK WALL.
STAFF CHANGE	Y	Y	N	N	Y	N	MANUAL SWITCHING TO TURN "ON" AND "OFF". AUTOMATIC PRESENCE DETECTORS ALSO PROVIDED FOR SWITCHING "OFF" LIGHTING WHEN AREAS ARE UNOCCUPIED.
STAFF LOUNGE	Y	Y	N	N	N	N	LIGHTING TO BE MANUALLY SWITCHED FROM DOOR.
STAIRCORE	Y	N	N	(SEE NOTES)	N	N	GENERALLY LIGHTING TO BE PERMANENTLY ON AND SWITCHED AT THE DB WITH THE EXCEPTION OF THE STAIRWAY FROM GROUND TO BASEMENT AND STAIRCORE TO PLANTROOMS WHERE AUTOMATIC PRESENCE DETECTORS PROVIDED FOR SWITCHING LIGHTING "ON" WHEN AREAS ARE OCCUPIED AND SWITCHING LIGHTING "OFF" WHEN AREAS ARE UNOCCUPIED. AUTOMATIC PRESENCE DETECTOR PROVIDED WITH ADJUSTABLE TIME DELAY.
STORE	Y	N	N	Y	N	N	AUTOMATIC PRESENCE DETECTORS PROVIDED FOR SWITCHING LIGHTING "ON" WHEN AREAS ARE OCCUPIED AND SWITCHING LIGHTING "OFF" WHEN AREAS ARE UNOCCUPIED. AUTOMATIC PRESENCE DETECTOR PROVIDED WITH ADJUSTABLE TIME DELAY.
STUDY ROOM	Y	Y	N	N	N	N	LIGHTING TO BE MANUALLY SWITCHED FROM DOOR.
TOUCHDOWN BASE	(SEE NOTES)	Y	(SEE NOTES)	N	N	N	LIGHTING TO BE CONTROLLED AS PART OF CORRIDOR CONTROL REGIME.
TREATMENT ROOM	Y	Y	N	N	N	N	LIGHTING TO BE MANUALLY SWITCHED FROM DOOR.

RHSC – DCN EDINBURGH – LIGHTING CONTROL SCHEDULE							
ROOM TYPE	**DUAL CIRCUIT REQUIRED**	**MANUAL SWITCHING**	**MANUAL DIMMABLE CONTROL**	**PRESENCE DETECTION**	**ABSENCE DETECTION**	**DAYLIGHT LINKING**	**NOTES**
WAITING AREA	Y	(SEE NOTES)	N	(SEE NOTES)	N	N	WHERE WAITING AREA IS LOCATED OFF A CIRCULATION/CORRIDOR SPACE THEN LIGHTING WILL BE CONTROLLED AS PER THE REGIME EMPLYED WITHIN THAT SPACE. WHERE WAITING AREA IS INDEPENDANT OF ANOTHER SPACE LIGHTING TO BE CONTROLLED FROM AN AUTOMATIC PRESENCE DETECTOR PROVIDED WITH ADJUSTABLE TIME DELAY.
WC (PUBLIC)	N	N	N	Y	N	N	AUTOMATIC PRESENCE DETECTORS PROVIDED FOR SWITCHING LIGHTING "ON" WHEN AREAS ARE OCCUPIED AND SWITCHING LIGHTING "OFF" WHEN AREAS ARE UNOCCUPIED. AUTOMATIC PRESENCE DETECTOR PROVIDED WITH ADJUSTABLE TIME DELAY.
WC (STAFF)	N	N	N	Y	N	N	AUTOMATIC PRESENCE DETECTORS PROVIDED FOR SWITCHING LIGHTING "ON" WHEN AREAS ARE OCCUPIED AND SWITCHING LIGHTING "OFF" WHEN AREAS ARE UNOCCUPIED. AUTOMATIC PRESENCE DETECTOR PROVIDED WITH ADJUSTABLE TIME DELAY.
WORKSHOP	Y	Y	N	N	N	N	LIGHTING TO BE MANUALLY SWITCHED FROM DOOR.

Additional Notes:

1. KNX to interface PIR's with circuits.
2. Daylight linking is proposed where practical (any areas without daylight will obviously not have day light linking.

Specification Check / Revision Sheet

Project	**RHSC and DCN Edinburgh Hospitals**	Project Number	**G1547**
Service (s)	**Mechanical & Electrical**	Sheet	**WW AP.1.2.31 JB G1547**
Performance Specification Title	**Electrical Network Management System**	Date	**August 2014**
Prepared By	**JB**	Checked By	**PM**

Revision Ref.	Date of Revision	Page N$^{o(s).}$	Revision Details	Checked By
FT	December 2013	All	Final Tender	PM
FC	July 2014	All	Update for Financial Close	JB
FC	August 2014	All	Comments Incorporated	JB

RHSC and DCN EDINBURGH
ELECTRICAL NETWORK MANAGEMENT SYSTEM

CONTENTS

1.0	GENERAL INTRODUCTION
2.0	SCOPE
3.0	SPECIFIC EXCLUSIONS
4.0	APPLICABLE STANDARDS
5.0	DESIGN CRITERIA
6.0	LIAISON
7.0	SYSTEMS

APPENDICES

APPENDIX A	SCHEDULE OF DRAWINGS
APPENDIX B	ENMS CONCEPT SCHEMATIC

1.0 GENERAL INTRODUCTION

Purpose of Document

The manufacture, supply, installation, wiring, connecting, setting to work and commissioning of the works described in this document.

This specification relates to the Low Voltage Distribution system serving the RHSC-DCN Building and the associated Energy Centre.

This specification shall be read in conjunction with all other mechanical and electrical engineering services specifications and the Architectural drawings.

Description of Project

The new facility shall re-provide services from the Royal Hospital for Sick Children, Child and Adolescent Mental Health Service and the Department of Clinical Neurosciences in a single building adjoining the Royal Infirmary of Edinburgh at Little France.

The DCN part of the Facilities will have a physical link with the existing RIE Facilities specifically with the critical care unit.

The building is generally constructed from reinforced concrete.

The basement houses FM support facilities and the main building services heat distribution centres and electrical plant rooms.

Ventilation plantrooms are generally located at roof level and level 2.

A central Energy Centre shall be provided to the South of the hospital housing heating, CHP, standby generation, fuel storage and utility incomers.

2.0 SCOPE

The scope of work covered by this specification shall include, but not be limited to, the Electrical Network Management Systems (ENMS). For the purpose of this document the ENMS shall be deemed to include the generator control systems.

The ENMS shall comprise two network based control systems with fibre control rings connecting via network interfaces and Input/output modules. The Individual input/output modules being both controllable from each of the A and B networks and displayable on each of the control panels for each of the A and B systems

Outline descriptions of the functional requirements of the ENMS are given in section 7.3.1 of this specification.

The ENMS shall be compatible with all relevant parts of the Building Services installation including the:-

- MV supply and distributions systems
- MV generators and their controls
- SPEN switchgear (Monitoring only)
- CHP systems and their controls
- LV distribution systems and switchgear
- BMS systems
- Power factor correction apparatus

The description given may include some functionality that may be provided by a separate generator control systems. If this is so, Project Co. shall ensure the separate ENMS and generator control systems are compatible and fulfill the whole of the requirements noted hereinafter or indicated on the associated drawings/schedules or noted in specifications and drawings for systems controlled by the ENMS and/or generator control systems.

3.0 SPECIFIC EXCLUSIONS

This specification relates to the Electrical Network Management Systems (ENMS) only. Other systems are detailed in other elements of the specification.

4.0 APPLICABLE STANDARDS

All elements of the works shall be designed in accordance with the requirements of SHTM 06-01, IEE Wiring Regulations BS 7671 (17th Ed.), current legislation, regulations and industry standards unless otherwise stated.

5.0 DESIGN CRITERIA

5.1 Electricity Supply Characteristics

The site will be provided with two new 11000Volt 50Hz, three phase electrical supplies from Scottish Power Energy Network's (SPEN's) MV network. These individual electrical supplies are derived from two sub-stations and terminate in a SPEN switchboard located adjacent to main MV switch room.

5.2 Drawings and sub-missions

As part of the development of the design the Board shall prepare general arrangement drawings of the works to be provided. These shall be based on the Architect's base drawings and coordinated with other services and building elements. A proposed drawing list shall be submitted with the Tender.

5.3 ITPD Requirements

This specification shall be read in conjunction with the NHS Lothian documents.

6.0 LIAISON

The Board shall include for liaison with:-

SPEN. Project Co. shall include for liaison with SPEN for the design of the services in/for the 11kV sub-station building and for ensuring that he will be able to connect to and monitor the circuit breakers in the main MV panels that SPEN are providing as part of their works.

The Hospital. The Board shall include for liaison in conjunction with the Board with members of the Hospital's team with an interest in the planning and administration of the small power System.

Any other member of the Project and Hospital teams concerned with the planning and administration of small power installations.

7.0 SYSTEMS

7.1 Generally

This specification shall be read in conjunction with the MV and LV systems drawings and specifications

7.2 Incoming Electrical Supplies

SPEN are providing two incoming electrical supplies each with a rating of 3MVA. These are to be arranged such that if either fails the other is capable of taking the complete building load.

The incoming MV electrical supplies will be terminated into the circuit breaker switch board which is designed to supply the electrical needs of the new development and includes an auto change over arrangement and two feeder breakers for the project which all need be monitored by the Electrical Network Management Systems (ENMS).

SPEN shall make volt free contacts available for status monitoring of the 4 devices which shall be run to a wall mounted interface demarcation box.

Project Co. shall liaise with SPEN examining their design drawings and proposals to verify the equipment being provided by SPEN is compatible with both the MV cables and the ENMS monitoring he is providing.

The RHSC-DCN supplies shall be terminated into the RHSC-DCN circuit breaker board which shall be designed to integrate with the generator circuit breaker board and provide supplies to the RHSC-DCN ring mains.

7.3 Electrical Network Management Systems

7.3.1 Generally

The new MV electrical systems will principally comprise two incoming supplies feeding into a distribution network whose principle equipment includes 14 No MV circuit breakers, 4No transformers, 3No MV Generators, including as outputs for the connection of generator testing load bank modules and the CHP unit.

The Main LV systems will principally comprise approximately 4No main LV switch panels, 30No sub-main panels supplying the Life Safety, critical, essential, less-essential and non-essential electrical systems throughout the new development. The Sub-main LV distribution systems comprises sub-main panels, bus-bars, switches/circuit breakers etc as shown on the drawings WW-XX-XX-SC-530.

The Electrical Network Management System (ENMS) will be required to monitor and where necessary automatically control the electrical systems/network during normal and abnormal conditions.

The ENMS will be required to:-

- Work in conjunction with the protection devices provided throughout the MV and LV distribution systems and where necessary carry out alternative switching of the systems as a result of MV or LV devices switching or tripping.
- Provide ‘event’ alarms at each control panel and on each display panel.
- Have password controlled ‘event’ acknowledgement at each control panel and in the FM office.
- Record MV and LV system events and, when required, provide print-outs showing all events.
- Enable authorised persons to control and carry out selective switching of the systems (manual override of any controlled/monitored device). This facility is to be password protected at each control/interface point and shall be available only in the generator control rooms and in the control rooms associated with the main incoming MV switch panel.
- Have separate passwords (higher levels of authorisation) for control of the MV systems.
- Have separate passwords for each user of the system and be able to record which user carried out which operation, alarm acknowledgement etc.
- Provide indication of the condition of the electrical network (hierarchical schematics) including the status of each item connected/monitored. This shall be achieved by the displaying of systems schematics on each of the display panels and identifying which of the devices are Closed, open, tripped withdrawn etc.
- Under partial or total mains failure conditions match the available supplies to the load and where necessary match the connected load to the available supplies.
- Control the switching of loads to meet the load step limits of the mains and the generators under all conditions.
- Provide output enable signals to the BMS to enable the BMS to start and stop (By the absence of the signals) the mechanical plant including chillers, fans, pumps, boilers, humidifiers etc. In this connection it should be noted that the BMS will need to be specially designed to accept the connection or removal of these ENMS signals as ‘priorities’ which need to be acted upon at a speed to suit the switching requirements of the Electrical systems.
- Apply the loads to the generators in an expedient manner to an agreed priority schedule.
- Control the necessary synchronisation with the mains and switching of the systems for both generator testing and when the mains are re-established after mains failure.
- Provide agreed control of the neutral earthing resistors for the various mains/generator paralleling situations.

- Capture and relay switchgear status, energy consumption, harmonic content, operation counter and fault indication to each of the interface control units and display these on the indicated schematics
- Be modular in its nature and be able to be extended
- Have 25% spare capacity.

All power supplies to the ENMS shall be provided via secure battery backed power supply units with sufficient autonomy to maintain the systems for a period of 72 hours under mains failure conditions. Each of these power supply units shall be monitored and alarmed onto each of the BMS and ENMS systems.

The ENMS shall be robustly designed to incorporate 'hot-standby' capability and be installed to provide the highest level of resilience to minimise the possibility of failure affecting the control of the electrical systems.

The ENMS shall use dedicated cables that are not used for any other purpose.

Separate 'A' and 'B' ENMS system control units will be required and will be linked to provide the required hot standby and increased resilience. The linking between the two systems shall be as indicated in the concept schematic.

ENMS user display and control units will be required at the following locations:-

- The Energy Centre control room— control panel and systems display.
- Main MV Switchroom — control panel and systems display.
- Main LV Panel; A1 - systems display
- Main LV Panel; A2 - systems display
- Main LV Panel; B1 - systems display
- Main LV Panel; B2 - systems display
- the Estates Office – display unit and control unit with only facilities to accept alarms (i.e. it shall not be possible to control switching from this location)
- Security Control room – display unit and control unit with only facilities to accept alarms (i.e. it shall not be possible to control switching from this location)

Each systems display unit shall provide hierarchical schematics of the systems showing the status of the devices controlled and/or monitored. This including switchgear status, energy consumption, harmonic content, operation counter and fault indication

Power supplies to local ENMS panels shall be provided from local battery backed power supply units that have sufficient autonomy to maintain the local systems for a minimum period of 72 hours under mains failure conditions. Each of these power supply units shall be monitored such that alarms are raised in the event of a failure.

7.3.2 Systems Operation

General

The ENMS will be arranged/programmed to control the electrical systems to make the best use of the available sources of supply (be that mains and/or generators).

- Matching of the Generators to required load
  - When the load is less than the capacity of the sets available (including synchronised/paralleled units and available non-running units) then a minimum of 500kVA of spinning reserve shall normally be paralleled.

- Matching of the load to the available generators.
  - Low priority numbers (less essential) shall be disabled until sufficient generators are available.
  - Allocation of 'load priorities' to various load centres, energy users, load types etc. all to enable the highest priority loads to be connected first or disconnected last while maintaining the systems within design limits.

Although the exact load prioritisation schedule will need to be agreed with the Hospital Board it is expected to include various priority ratings such as those noted in the table below:-

Priority Rating	Outline description of Load
1	Statutory requirements – Evacuation lifts, smoke extract/pressurisation fans, sprinkler pumps, wet riser pumps etc. Generator auxiliary supplies
2.1	Riser 1 Category 4 and 5 area life safety lighting and small power.
2.2	Riser 2 Category 4 and 5 area life safety lighting and small power.
2.3	Riser 3 Category 4 and 5 area life safety lighting and small power.
2.4	Riser 4 Category 4 and 5 area life safety lighting and small power.
3.1	Riser 1 Category 3 area Heating and Vent systems
3.2	Riser 2 Category 3 area Heating and Vent systems
3.3	Riser 3 Category 3 area Heating and Vent systems
3.4	Riser 4 Category 3 area Heating and Vent systems
4	Essential heating and systems
5	Vertical transportation
6	Imaging equipment supplies
7.1	Less Essential Heating and Ventilation Systems
7.2	Less Essential Heating and Ventilation Systems
8	Imaging equipment supplies
9.1	Chillers and cooling – stage 1
9.2	Chillers and cooling – stage 2
9.3	Chillers and cooling - stage 3

It should be noted that some of these load priorities may, subject to actual loads, be either switched together or switched at different times or even be sub-divided further as the design is finalised.

Mains failure – When RHSC MV systems healthy

Under normal mains failure conditions (when the RHSC-DCN MV infrastructure is healthy) the standby generator systems will be required to start and synchronise sufficient generator sets to permit the following minimum RHSC-DCN loads to be re-connected:-

Elapsed Time from generator start signal	Outline description of loads to be connected	Load STEP to be connected (kVA)
15 seconds	RHSC-DCN and energy centre - Lighting, small power and statutory life safety	1000
25 seconds	RHSC-DCN and energy centre - General loads	1000
35+ Seconds	RHSC-DCN l and energy centre - Non essential loads	1000

Under extreme conditions when generators sets may not be available to start (due to maintenance of individual units or switchgear not being available etc) the 15 and 25 second loads to be applied shall also be as the above table with loads adjusted proportionally for the number of units available to start.

Under Mains failure conditions the initial load sequencing shall be as follows:-

- Start signal to transfer to alternative SPEN supply (Wait 1 second)
- Start Signal to Generator (Wait 2 second)
- Generator Synchronising Period (+12 seconds)
- Transfer to alternative SPEN supply (If available)
- Commence sequential load connection process
- If alternative SPEN supply not available
  - RHSC Main Breakers open
- Review available synchronised generators and commence sequential load connection process

After the initial load sequencing, the ENMS shall continue to match the connected load of the site to the available generators by:-

- Enabling greater loads by enabling further load priority signals and starting of available generators up to the capacity of the generators available
- Starting/synchronising/paralleling of further generators when the site load increases.
- Disabling loads priorities when the site load exceeds the available generator capacity

Mains failure – Elements of MV systems tripped or isolated.

If both the Incoming supplies fail while elements of the MV Systems are out of circuit then the ENMS shall automatically work to restore electrical supplies to the loads without supplies in accordance with the Truth Table (to be progressed at Preferred Bidder stage).

Where the above requires the generators to be started to supply the failed loads then the generator starting and load sequencing shall generally be similar to that noted for normal mains failures. It should however be noted that, unless specifically required by the Truth Table, healthy supplies to RHSC-DCN loads should not be isolated in the process.

Operating Scenarios

The systems will need to be programmed to ensure the best use is made of the available sources. This is expected to include:-

Condition	**Response**
Normal operation-	Electrical systems operates from preferred incoming supply
Single supply failure-	All loads transfer to the single healthy supply.
Twin supply failure- (with normal Generator start conditions)	After the pre-set monitoring period (adjustable 0 - 5 seconds) Generators start and synchronise as one common group. After 15 seconds from the generator start signal the maximum permissible load step is applied to the generators (1.5MVA) After 25 seconds from generator start signal a further maximum permissible load step is applied to the generators (1MVA) The remaining plant load is then introduced
Twin supply failure- (with abnormal Generator start conditions)	After the pre-set monitoring period (adjustable 0 - 5 seconds) Generators start and synchronise as one common group. After 15 second from the generator start signal maximum permissible loads are applied - Loads commensurate with the number of generators synchronised. After 25 seconds from the generator start signals maximum permissible additional loads are applied – Loads commensurate with the number of generators synchronised. At 10 second intervals additional maximum permissible loads are applied until all generators are fully loaded.
Normal running on generators	The number of generators synchronised and supplying load are optimised to ensure that the number of units running matches the load with 2000kW spare. (i.e. N+1 generators on line)

Condition	Response
All operating Generators fail in operation while mains healthy	Load is transferred back to mains in accordance with the agreed load transfer steps.
Partial Generator failure or generator switchgear failure while the generators are supplying the load and the mains is Healthy	Failed generators/switch gear isolated. Load shed to suit the available capacity of the generators synchronised then either:- • If the load shedding requires isolation of the most important load priorities then the Generators shall be taken off-line, the MV systems re-energised from the mains and the loads connected back to the mains in load priority order. Or • If the load shedding does not require isolation of the most important loads then additional generators (where available) shall be started and synchronised before additional loads are connected in load priority order. The load priority level at which the generators are isolated shall be selectable from the ENMS control panels and shall for the purpose of initial set-up shall be agreed with the Board during the detailed design. This to occur quick enough to prevent the remaining generators (or their switchgear) failing on overload.
Single generator fails in normal N+1 operation.	Additional generator starts to regain the N+1 Status of the system. No load shedding
Single generator fails when not in N+1 configuration	Failed generators/switch gear isolated. Load shed to suit the available capacity of the remaining generators. If available offline generator shall start and synchronise before additional loads added to suit the generator capacity
Partial Generator failure or generator switchgear failure while the mains is failed.	Failed generators/switch gear isolated then either:- • Load shed to suit the available capacity of the generators synchronised. (This to occur quick enough to prevent the remaining generators [or their switchgear] failing/tripping on Overload) Or • Generators switch boards isolated and load shedding LV breakers before the MV systems are re-energised and the loads re-applied in accordance with the priority schedule and the number of generators synchronised. If available offline generator shall start and synchronise before additional loads added to suit the generator capacity.

Condition	Response
Supply Restoration (single or both)	Requires manual intervention to transfer loads back to the mains. Load transfer back to the mains may include isolation of lower priority loads (i.e. certain cooling plant) and a generator to reduce the fault level during synchronisation with the mains and transfer of the load before opening the generator circuit breakers.
Failure of an LV supply to critical equipment	The low voltage supply changes-over to the remaining healthy supply

In all cases the ENMS shall note the position and conditions of all connected devices and instantly amend the stored diagrams to show the current condition of the systems on the display panels. It should be noted that under major failure conditions when multiple switching operations need to take place in a short time that these shall take precedence over updating and displaying of the stored diagrams – in which case the display screens shall simply

The final operating sequences for the electrical network will be detailed as the design progresses.

The Systems shall be arranged to permit the testing of generators as follows with each of these only being selectable by MV authorised persons:-

1. All generators by Simulation of mains failure to the main incoming panels. This facility shall have additional higher level access codes as it requires a break in the supplies to the RHSC-DCN.
2. All generators by synchronising with the mains before isolating the mains so the generators supply the RHSC-DCN.
3. Each of the A and B sides of the generators by separating the A and B systems and simulating mains failures to them. This facility shall have additional higher level access codes as it requires a break in the supplies to part of the RHSC-DCN.
4. Each of the A and B sides of the generators by separating the A and B systems and synchronising the A or B half of the generators with their corresponding incoming supply before isolating the incoming supply.
5. Individual generators against Individual load banks without affecting the remaining MV network or the ability of the other generators to act as mains-failure back-up to the site.
6. Each of the A and B sides of the generators against load banks for proving of the systems without the need to supply the RHSC-DCN.

Whenever the generators are tested against the RHSC-DCN load it shall be possible to effect a break-free transfer of the load from the generators after the test period.

Each time the systems require the generators to be synchronised with the incoming supply the systems shall require the input of a higher level security MV authorised access code and shall specifically ask if the synchronisation has been agreed with the SPEN.

Appendix A – Schedule of Drawings

Drawing Title	Drawing Number
MV Distribution Schematic	WW-XX-XX-SC-530-001
LV Distribution Sub-Station No.1 Schematic	WW-XX-XX-SC-530-002
LV Distribution Sub-Station No.2 Schematic	WW-XX-XX-SC-530-003

Appendix B – ENMS Concept Schematic

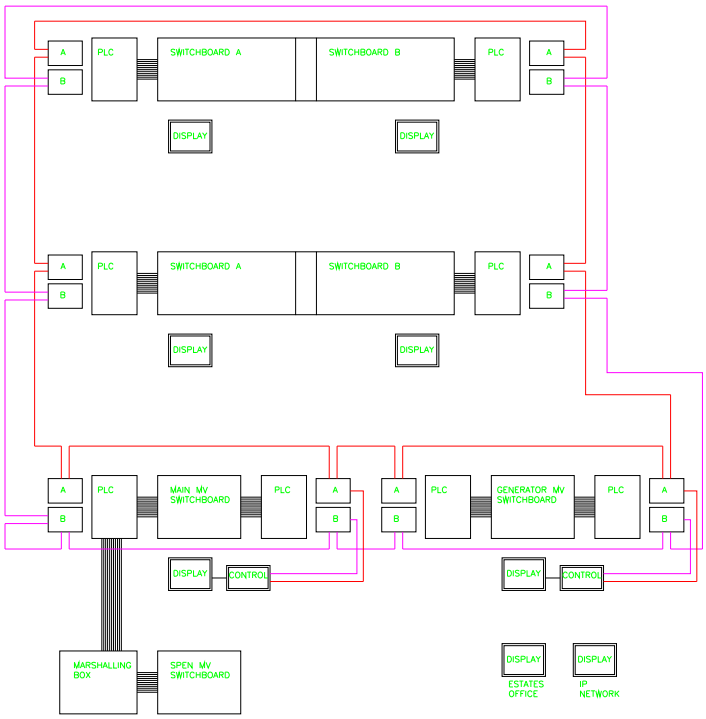

ENMS CONCEPT SCHEMATIC

Specification Check / Revision Sheet

Project	**RHSC and DCN Edinburgh Hospitals**	Project Number	**G1547**
Service (s)	**Mechanical & Electrical**	Sheet	**WW AP.1.2.32 JB G1547**
Performance Specification Title	**Lighting Calculations and Luminaire Selection**	Date	**August 2014**
Prepared By	**JB**	Checked By	**PM**

Revision Ref.	Date of Revision	Page N$^{o(s).}$	Revision Details	Checked By
FT	December 2013	All	Final Tender	PM
FC	July 2014	All	Update for Financial Close	JB
FC	August 2014	All	Comments Incorporated	JB

RHSC and DCN EDINBURGH
LIGHTING CALCULATIONS AND LUMINAIRE SELECTION

CONTENTS

1.0 GENERAL

2.0 SELECTION CRITERIA AND STANDARDS

3.0 LUMINAIRES

4.0 EMERGENCY LIGHTING

5.0 EXTERNAL LIGHTING

LIGHTING CALCULATIONS AND LUMINAIRE SELECTION

1.0 GENERAL

1.1 Purpose of Document

The manufacture, supply, installation, wiring, connecting, setting to work and commissioning of the works described in this document.

This specification relates to the Low Voltage Distribution system serving the RHSC-DCN Building and the associated Energy Centre.

This specification shall be read in conjunction with all other mechanical and electrical engineering services specifications and the Architectural drawings.

1.2 Description of Project

The new facility shall re-provide services from the Royal Hospital for Sick Children, Child and Adolescent Mental Health Service and the Department of Clinical Neurosciences in a single building adjoining the Royal Infirmary of Edinburgh at Little France.

The DCN part of the Facilities will have a physical link with the existing RIE Facilities specifically with the critical care unit.

The building is generally constructed from reinforced concrete.

The basement houses FM support facilities and the main building services heat distribution centres and electrical plant rooms.

Ventilation plantrooms are generally located at roof level and level 2.

A central Energy Centre shall be provided to the South of the hospital housing heating, CHP, standby generation, fuel storage and utility incomers.

1.3 Scope

Provision of:

- Selection of suitable luminaires
- Execution of lighting calculations
- Production of CAD luminaire layout drawings
- Designation of luminaires for emergency lighting

1.4 Exclusions

Design of:

- Lighting controls
- Circuiting
- Switching
- Cabling systems
- Emergency lighting test equipment

1.5 Information

Project Co. shall collate the following:

- CAD files showing luminaires in every room and indicating luminaires to be designated as emergency lighting luminaires
- Computer generated point calculations with contribution from inter-reflected light
  - Luminaire layout drawings
  - Luminaire photometric data including flux fraction ratios, polar intensity curves and utilisation factors
  - Lamp technical information
  - Room surface reflectance values
  - Maintenance factor calculations
  - Isolux contour plots for working plane and room surfaces
  - Schedule of design and calculated maintained average illuminance values
  - Schedule of design and calculated uniformity values
  - Calculated glare index values where deemed necessary by CIBSE LG2

- Luminaire and lamp schedule
- 3D model of the Atria for use within design team
- Data sheet of each luminaire
- Calculation sheets shall indicate wall and ceiling to working plane illuminance ratios

2.0 SELECTION CRITERIA AND STANDARDS

2.1 General

The lighting system shall comply with CIBSE Code for Lighting, and all CIBSE Lighting Guides, BS 4533, BSEN 12464-1, BSEN 60598-2-25, SHTM06-01, BS 5266 (all parts), Table 1 (and it's accompanying notes) of the ILE Guidance notes for the reduction of obtrusive light - 2011, Building (Scotland) Regulations, SLL Lighting Handbook: 2009, SLL Code for Lighting 2012 and SHBNs. The design shall also take due cognisance of “Lighting and Colour for Hospital Design” by Duke (NHS Estates, 2004) and Secure by Design.

2.2 The Lit Appearance

The lighting design shall take into account a number of considerations including:

- provide illumination levels and select luminaires which are appropriate for the task being carried out,
- select and arrange luminaires which are sympathetic, co-ordinate with and compliment the overall interior design concept,
- minimize ongoing maintenance costs by selecting luminaires and lamps from a limited number of sources and types,
- available daylight,
- glare,
- the lit appearance,
- illuminance at task areas,
- lamp colour,
- colour rendering,
- energy efficiency.

The lighting shall aim to promote a sense of well being in the patients and an air of competence and quality throughout the building.

In public areas the emphasis shall be on creating a pleasing environment with gentle but deliberate contrasts. Consideration shall be given to the use of LED luminaires in public spaces.

Computer modelling shall be employed to illustrate the lit appearance of the Atrium. The lighting shall create interest and contrast and highlights architectural features.

Glare shall be controlled and luminaires positioned so as not to cause discomfort to patients who may be in a prone position.

The general lighting shall be used as part of the way-finding strategy to highlight landmarks, reception desks and enquiry desks.

Feature lighting for art components shall be developed in accordance with the art budget.

2.3 Lighting Levels

Maintained illuminance shall take into account “normal” cleaning of luminaires and surfaces and depreciation of lamp output. “Normal” being defined as:

(a) Lamp life
(b) Annual luminaire cleaning
(c) Bi-annual room surfaces clean
(d) Spot lamp replacement

The initial illuminance shall therefore be higher than the maintained illuminance. The maintained illuminance shall be the average illuminance over the reference surface at the time maintenance has to be carried out by replacing lamps and/or cleaning the equipment and room surfaces. The reference surface shall be the working plane at desktop, bench top, floor, bed, couch or other position, as stated in the Room Data Sheets and CIBSE Lighting Guide LG2.

Lighting levels shall be in accordance with the Room Data Sheets and CIBSE LG2: 2008, in that order of precedence.

2.4 Lighting Maintenance Factors

Shall be determined in accordance with SLL Lighting Handbook: 2009

The lighting scheme shall have an overall maintenance factor calculated for the selected lighting equipment, space environment and specified maintenance schedule.

The Specialist shall:

- State the maintenance factor assumed
- Specify lighting equipment suitable for the application environment

2.5 Lamp Temperature

Generally, lamps shall have a colour temperature of 4000 K unless specifically stated otherwise in Room Data Sheets or LG2. Notwithstanding, the Board is encouraged to explore alternative lamp colour temperatures but shall seek approval of the Client for any changes to this specification.

2.6 Lamp Type

Lamps shall generally be high frequency T5 type linear fluorescent. LED lamps shall be utilised where feasible in lieu of compact fluorescent. Display and feature lighting shall utilise LED lamps where feasible.

2.7 Colour Rendering Index

Generally, all lamps shall have a colour rendering index Ra ≥ 85.

In rooms where Ra≥90 is required this shall relate the task area only.

2.8 Control Gear

Normal and emergency luminaires being run over the DALI/KNX network shall be provided with DALI compatible control gear.

Fluorescent luminaires not being run over the DALI/KNX network shall be fitted with high frequency control gear.

2.9 Energy

A ‘DEER’ value of level A shall be achieved, i.e.: a minimum of 66 lamp lumens per circuit watt.

Tungsten and tungsten halogen lamps shall not be used.

2.10 Lighting Controls

Refer to Lighting Installation Specification WW.A.P.1.2.30 for full details.

3.0 LUMINAIRES

3.1 Preliminary Luminaire Schedule

The luminaires shall be of the following type:

Area	Type of luminaire	Lamp type
Staff bases, receptions	Circular downlighter	
Bathrooms, shower rooms and changing rooms	Circular downlighter with sealed IP44	LED
Bed rooms	Wall mounted at bed head, including night lighting	LED
Corridors, wait areas	Recessed or semi-recessed modular fitting with prismatic diffuser or wall mounted prismatic	LED
Offices, admin areas, interview rooms, meeting rooms, seminar rooms	Recessed modular direct/indirect luminaire.	T5 lamps
Treatment room, dirty utility, clean utility, examination room, pantry and kitchens	Recessed modular fitting with prismatic diffuser. Sealed IP44	T5 lamps
Stairwells	Circular surface luminaires, wall mounted	LED
Plant areas and stores	Enclosed with high impact protection	T5 lamps
Atrium and entrance	Decorative	Various including LED
Theatres	Recessed modular fitting with prismatic diffuser. Sealed IP54	T5 lamps
A&E Toilets	Anti vandal luminaire with hidden fixings as required by Secure By Design.	LED

Dimming controls to be provided were indicated in the room data sheets.

3.2 IP Rated Luminaires

In certain areas such as operating theatres, showers and any luminaires exposed to external conditions, luminaires with a suitable IP rating shall be selected.

Rooms with plasterboard ceilings for infection control purposes shall have luminaires of a minimum IP44 rating.

3.3 Ward Luminaires

Ward bed areas shall be provided with a horizontal bed head trunking system, which shall provide varying levels of lighting to allow general lighting, night lighting and reading lighting.

Each high dependency and recovery bed position shall have a wall or bed-head trunking mounted, examination lamp with integral switch.

3.4 Corridor Lighting

BSEN 12464-1:2011 implies that corridors should be lit to 200 lux during the day and 50 lux at night. This is taken to mean that night lighting will be provided to corridors in bedded areas only.

Luminaires to be wall mounted or recessed or semi-recessed LED lay-in luminaire with a shallow projection beyond line of ceiling this will throw light across the ceiling surface increase the perceived brightness of the corridor. Luminaire to be sealed with internal reflector and external prismatic diffuser.

Corridor lighting shall be clear, concise and economic, by means of semi-recessed linear fluorescent fitting running parallel to the line of the corridor and off centre to one side to spill light further horizontally minimising high-level shadow marks on the walls, as well as putting some light onto the ceiling which would otherwise be directly unlit. In specific single patient ward corridors the lighting shall respond to the architectural layout of the rooms and doorways similar to a hotel corridor. Major intersections or nodes along corridors can be marked through a change in lighting or the use of a different luminaire (size, shape, proportion) throughout the building.

3.5 Communal Spaces

Communal and social areas should benefit from interesting lighting, not just in the form of interesting luminaire selection, but also of differing lighting intensities within the space that add interest and life into it. Staff/nurse bases shall be made more visible though increased lighting onto counter surfaces and through wall-washing vertical surfaces behind them to increase their lit presence. Wall hung art work shall be illuminated.

3.6 Plantroom Lighting

Final mounting height and layout shall suit final plantroom layouts.

Accessible plant areas, roof void areas, ducts, lift motor rooms, shafts and similar utility areas shall be illuminated utilising suitably IP rated luminaires with impact resistant covers.

3.7 Food Preparation Areas

Sealed food factory type luminaires shall be provided in areas in which food is prepared, cooked and stored.

3.8 Explosion Hazard Area Lighting

Luminaires in explosion hazard areas shall be suitable for the classification of the area.

The assessment of where hazardous explosive atmospheres may occur is by others.

4.0 EMERGENCY LIGHTING

Emergency lighting shall be by means of self-contained battery/inverter conversion kits which shall be sealed and provide 5 years battery design life.

Emergency lighting shall be in accordance with BS5266, CIBSE Lighting Guide LG12.

External emergency lighting shall be provided to muster points and external escape routes.

5.0 EXTERNAL LIGHTING

General

Helipad lighting and aircraft warning lighting shall be selected by the Specialist in accordance with CAA requirements.

New external lighting systems will be provided to the whole of the area which forms part of the Board's site in accordance with table 2 of LG2.

BREEAM Compliance

ENE 4: External lighting

1. External light fittings for the building, access ways and pathways will be selected such that the average installed efficacy for the site exceeds 50 lamp lumens / circuit Watt when a lamp has a colour rendering index greater than or equal to 60. Or 60 lamp lumens / circuit Watt when a lamp has a colour rendering index less than 60.
2. External lighting for signs and uplighting will be selected such that the average installed efficacy for the site exceeds 60 lamp lumens / circuit Watt where the lamp wattage is greater than or equal to 25W or 50 lamp lumens / circuit Watt where the wattage is less than 25W.
3. External light fittings will be controlled by a combination of time switches and daylight sensors in order to prevent operation during daylight hours, this will take effect from 23:00.

POL 7: Reduction of night time light pollution

1. The external lighting strategy will be designed to comply with ILE Guidance notes for the reduction of obtrusive light.
2. Adjustable time switches will be provided such that external lighting (other than safety and security lighting) can be automatically switched off between selected hours, this will take effect from 23:00.
3. Safety and security lighting will be designed to comply with ILE's Guidance notes.
4. Illuminated advertisements, where specified, will be designed in compliance with ILE Technical Report 5.

Illumination Levels

As per CIBSE Lighting Guide 2 Hospitals and Healthcare buildings.

Specification Check / Revision Sheet

Project	**RHSC and DCN Edinburgh Hospitals**	Project Number	**G1547**
Service (s)	**Mechanical & Electrical**	Sheet	**WW AP.1.2.33 JB G1547**
Performance Specification Title	**Television & Radio Distribution**	Date	**August 2014**
Prepared By	**JB**	Checked By	**PM**

Revision Ref.	Date of Revision	Page N$^{o(s).}$	Revision Details	Checked By
FT	December 2013	All	Final Tender	PM
FC	July 2014	All	Update for Financial Close	JB
FC	August 2014	All	Comments Incorporated	JB

RHSC and DCN EDINBURGH
PERFORMANCE SPECIFICATION TELEVISION AND RADIO DISTRIBUTION SYSTEMS

CONTENTS

1.0	GENERAL INTRODUCTION
2.0	SCOPE
3.0	PERFORMANCE SPECIFIED SYSTEMS
4.0	SPECIFIC EXCLUSIONS
5.0	INTERFACES AND DEMARCATIONS
6.0	APPLICABLE STANDARDS
7.0	DESIGN CRITERIA
8.0	LIAISON
9.0	SYSTEMS
9.1	TELEVISION AND RADIO DISTRIBUTION SYSTEMS

MATERIALS AND WORKMANSHIP CLAUSES

W20	Television and Radio Distribution Systems

1.0 GENERAL INTRODUCTION

Purpose of Document

The manufacture, supply, installation, wiring, connecting, setting to work and commissioning of the works described in this document.

This specification relates to the Low Voltage Distribution system serving the RHSC-DCN Building and the associated Energy Centre.

This specification shall be read in conjunction with all other mechanical and electrical engineering services specifications and the Architectural drawings.

Description of Project

The new facility shall re-provide services from the Royal Hospital for Sick Children, Child and Adolescent Mental Health Service and the Department of Clinical Neurosciences in a single building adjoining the Royal Infirmary of Edinburgh at Little France.

The DCN part of the Facilities will have a physical link with the existing RIE Facilities specifically with the critical care unit.

The building is generally constructed from reinforced concrete.

The basement houses FM support facilities and the main building services heat distribution centres and electrical plant rooms.

Ventilation plantrooms are generally located at roof level and level 2.

A central Energy Centre shall be provided to the South of the hospital housing heating, CHP, standby generation, fuel storage and utility incomers.

2.0 SCOPE

The scope of work covered by this Performance Specification shall include, but not be limited to the following:-

<u>TV and Radio System</u>

- TV and radio transmissions distribution cabling
- Provision of the equipment required to enable radio (including hospital radio) and both “freeview” TV services to be distributed.
- Integration of Hospital Radio with TV and radio system.
- Final run out conduits
- Conduits in or on walls

3.0 PERFORMANCE SPECIFIED SYSTEMS

The Television and Radio Distribution system is a performance specified system and this specification outlines the requirements to be met by the system.

4.0 SPECIFIC EXCLUSIONS

The following is specifically excluded from the scope of this Performance Specification:-

- Power wiring
- Main cable containment (other than final run outs of conduits)
- Suitable Hospital Radio system (by Board)

5.0 INTERFACES AND DEMARCATIONS

The Television and Radio Distribution system shall be separate from NHS Lothian Internet Protocol network.

6.0 APPLICABLE STANDARDS

All elements of the works shall be designed in accordance with the requirements of current legislation, regulations and standards stated in the Materials & Workmanship clauses.

The Television and Radio Distribution system shall be designed in accordance with HTM 08-03 : Bedhead Services.

7.0 DESIGN CRITERIA

Electricity Supply Characteristics

LV power characteristics: 400/230 V, 3-phase, 50 Hz, 230 V, 1-phase, 50 Hz.

Drawings

As part of the development of the design Project Co. shall prepare general arrangement drawings of the Television and Radio Distribution systems based on the base drawings and coordinated with other services and building elements.

8.0 LIAISON

Project Co. shall include for liaison with:-

Health and Safety Professionals. As well as the Health and Safety requirements of this specification, the Specialist Installer shall include for close liaison with Health and Safety professionals including the Hospital's Health and Safety Advisors and the CDM Co-ordinator and shall comply with the CDM Regulations and all Health and Safety regulations.

The Hospital. The Project Co. shall include for liaison in conjunction with the Board with members of the Hospital's team with an interest in the planning and administration of the Television and Radio Distribution systems.

9.0 SYSTEMS

Low Current Systems action following mains failure/generator test conditions

The low current systems specified herein to be self-rebooting following mains failure and generator test conditions.

9.1 TELEVISION AND RADIO DISTRIBUTION SYSTEMS

General

The television and radio systems as described below shall be made available as a bedhead service.

Television and radio reception and distribution infrastructure such as external aerials/ dishes, containment and cabling/ distribution to enable radio (including hospital radio) and Freeview TV services shall be provided.

Cabling and Cable Containment

The main cabling routes shall be supported by wire basket cable trays.

Cable drops in or on walls shall be run protected in plastic conduit which shall be provided and installed by the Specialist.

In areas of non demountable ceilings, such as in Theatre suites, wiring shall be run in conduit arranged in a ‘loop-in’ basis to allow wiring without access to the ceiling void.

W20 Television and radio distribution systems

GENERAL

110 PATIENT ENTERTAINMENT SYSTEM INFRASTRUCTURE FOR NHS LOTHIAN ENTERTAINMENT SYSTEM

The Board shall submit proposals to provide the infrastructure necessary to enable the future installation of a leased patient entertainment system which will meet the following specification:

- System manufacturer:
  - Member of the Society of Cable and Television Engineers (SCTE);
  - Member of Confederation of Aerial Industries Ltd (CAI);
  - Member of the Independent Digital Standards Commission (IDSC); or
  - Submit proposals.
- Type: Submit design and cost proposals.
- Input signals:
  - Analogue terrestrial television (UHF);
  - Frequency modulated (FM) radio (VHF);
  - Digital audio broadcasting (DAB);
  - Digital terrestrial television (DTT);
  - Pay TV (hotel services);
  - game and internet services
  - telephone
    and
  - Submit design and cost proposals.
- Aerials:
  - DAB;
  - FM;
  - UHF; and
  - Submit design and cost proposals.
- Distribution equipment:
  - Diplexers;
  - Equalizers;
  - Launch amplifiers;
  - Masthead amplifiers;
  - Multiswitches;
  - Splitters; and
  - Submit design and cost proposals.
- Outlets: Television outlets.
- Accessories: Submit design and cost proposals.
- Completion: Submit design and cost proposals.

110B TV & RADIO DISTRIBUTION SYSTEM

The Board shall submit proposals to provide the infrastructure necessary for radio (including hospital radio) and both digital satellite/terrestrial “freeview” TV services which will meet the following specification:

- System manufacturer:
  - Member of the Society of Cable and Television Engineers (SCTE);
  - Member of Confederation of Aerial Industries Ltd (CAI);
  - Member of the Independent Digital Standards Commission (IDSC); or
  - Submit proposals.
- Type: Submit design and cost proposals.

- Input signals:
  - Analogue terrestrial television (UHF);
  - Frequency modulated (FM) radio (VHF);
  - Digital audio broadcasting (DAB);
  - Digital terrestrial television (DTT);
  - Hospital Radio;
- Aerials:
  - DAB;
  - FM;
  - UHF; and
  - Submit design and cost proposals.
- Distribution equipment:
  - Diplexers;
  - Equalizers;
  - Launch amplifiers;
  - Masthead amplifiers;
  - Multiswitches;
  - Splitters; and
  - Submit design and cost proposals.
- Outlets: Data outlets as identified by ADB codes such as, but not limited to OUT121, OUT131, OUT133 & OUT135.
- Accessories: Submit design and cost proposals.
- Completion: Submit design and cost proposals.

120 CABLING AND CONTAINMENT FOR PATIENT ENTERTAINMENT SYSTEM

- Cable: CAT 6A.
- Containment: Cable basket, as section Y63 and plastic conduit for final run outs.
- Rewireable installation: Required.
- Concealed installation: Required.
- Completion: Submit design and cost proposals.

SYSTEM PERFORMANCE

210 DESIGN

- Equipment provided by NHS Lothian.

220 PERFORMANCE

- ITU impairment grade: Submit proposals.

230 WIND RESISTANCE OF ANTENNAE

- An antennae array should be capable of withstanding winds of 100 km/h and gusting of 160 km/h without excessive movement or permanent deformation.

PRODUCTS

310 UHF ANTENNAE

- Manufacturer: Board's choice.
  - Product reference: Board's choice.
- Approval: CAI Benchmark.
- Forward gain: Board's choice.
- Front/ back ratio: Board's choice.
- Channel group: submit proposals.

320 FM ANTENNAE

- Manufacturer: Board's choice.
  - Product reference: Board's choice.
- Approval: CAI Benchmark
- Forward gain dB(i): Board's choice.
- Front/ back ratio dB(i): Board's choice.

330 DAB ANTENNAE

- Manufacturer: Board's choice.
  - Product reference: Board's choice.
- Forward gain: Board's choice.
- Front/ back ratio: Board's choice.

350 MASTHEAD AMPLIFIERS

- Manufacturer: Board's choice.
  - Product reference: Board's choice.
- Type: Board's choice.
- Channel group: submit proposals.
- Frequency:
  - DAB 217.5 - 230 MHz;
  - FM 87.5 -108 MHz; or
  - UHF 470-862 MHz.
- Noise (maximum): <3 dB.
- Gain: Board's choice.
- Impedance:
  - Input and output terminals: 75 ohm.
- Mains 230 V connection: Required.

360 EQUALIZERS general

- Manufacturer: Board's choice.
  - Product reference: Board's choice.
- Type: Submit proposals.
- Transmitter source: Board choice .
- Signal loss: Board's choice.

370 LAUNCH AMPLIFIERS

- Manufacturer: Board's choice.
  - Product reference: Board's choice.
- Type: Board choice.
- Output power (dB µV) Board's choice.
- Frequency: submit proposals.
- Gain: Board's choice.
- Impedance:
  - Input and output terminals: 75 ohm.

380 MULTISWITCHES general

- Manufacturer: Board's choice.
  - Product reference: Board's choice.
- Frequency:
  - Satellite bandwidth: 950-2150 MHz.
  - Terrestrial bandwidth: 47-862 MHz.

- Inputs:
  - IF: Board choice.
  - Wideband UHF-VHF: Board choice.
- Outputs Board choice.
- Satellite signal loss Board's choice.
- Terrestrial signal loss Board's choice.
- Switching: 13 V, 18 V, 13 V/ 22 kHz, 18 V/ 22 kHz.

390 DIPLEXERS

- Manufacturer: Board's choice.
  - Product reference: Board's choice.
- Type: Board choice.
- Signal loss: Board choice.

400 SPLITTERS general.

- Manufacturer Board's choice.
  - Product reference: Board's choice.
- Outgoing connection: Board's choice.
- Frequency range: Board's choice.
- Signal loss: Board's choice.

410A PATIENT ENTERTAINMENT OUTLETS

- Manufacturer: Board's choice.
  - Product reference: Board's choice.
- Type: CAT6A.
- Colour: Match electrical accessories.

EXECUTION

620 INSTALLING ANTENNAE AND DISHES

- Installation: In accordance with the CAI Code of practice for the Installation of terrestrial and satellite TV reception systems.
- Locations: Board's choice.
- Position: Board's choice.
- Mounting: Roof.
  - Concrete base: Required.
- Planning permission: Required.

640 INSTALLING CABLING

- Standard: To BS 7671.
- Installation: In accordance with the CAI Code of practice for the installation of terrestrial and satellite TV reception systems.
- Route: Boards choice and Submit proposals.
- Timing: Do not start internal cabling until building enclosure provides permanently dry conditions.
- Cables: Install in one length.
- Cable pulling: Submit proposals. Do not overstress. Prevent kinks and twisting of the cable.
- Bending radius (minimum): 10 times outside diameter of cable.
- Cable fixing: Do not staple.
- Cables passing through walls: Sleeve with conduit or pipe duct. Bush at both ends.
- Jointing: At equipment and terminal fittings only.

650 INSTALLING AMPLIFIERS

- Location: Board's choice and Submit proposals.

660 INSTALLING OUTLET PLATES

- Mounting: Recessed.
  - Height (finished floor level to underside of equipment): as loaded 1:50 drawings.
- Minimum depth of backboxes: 35 mm.

670 CONNECTION TO LIGHTNING PROTECTION SYSTEM

- Connection: In accordance with the CAI Code of practice for the installation of terrestrial and satellite TV reception systems.

COMPLETION

910 TESTING AND INSPECTION

- Method statement: Submit.
- Tests:
  - At receivers: In accordance with CAI Code of Practice for the Installation of terrestrial and satellite TV reception systems. Signal output level at each head end and amplifier: Measure.
  - Carrier to noise ratio at outlets: Measure.
  - Outlets to be tested: All.
- Results: Submit.

920A DOCUMENTATION

- Operation and maintenance instructions, record drawings & test/commissioning certificates to be compatible with Zutec system
- Operation and maintenance instructions: Submit.
- TV Aerial Certificates: Submit
- Record drawings: Submit.
  - Number of copies 3.

Specification Check / Revision Sheet

Project	**RHSC and DCN Edinburgh Hospitals**	Project Number	**G1547**
Service (s)	**Mechanical & Electrical**	Sheet	**WW AP.1.2.34 JB G1547**
Performance Specification Title	**Nurse Call Systems**	Date	**August 2014**
Prepared By	**JB**	Checked By	**PM**

Revision Ref.	Date of Revision	Page N$^{o(s).}$	Revision Details	Checked By
FT	December 2013	All	Final Tender	PM
FC	July 2014	All	Updated for Financial Close	JB
FC	August 2014	All	Comments Incorporated	JB

RHSC and DCN EDINBURGH
NURSE CALL SYSTEMS

CONTENTS

1.0	GENERAL INTRODUCTION
2.0	SCOPE
3.0	PERFORMANCE SPECIFIED SYSTEMS
4.0	SPECIFIC EXCLUSIONS
5.0	INTERFACES AND DEMARCATIONS
6.0	APPLICABLE STANDARDS
7.0	DESIGN CRITERIA
8.0	LIAISON
9.0	SYSTEMS
9.1	NURSE CALL SYSTEMS

MATERIALS AND WORKMANSHIP CLAUSES

W55	NURSE CALL SYSTEMS

1.0 GENERAL INTRODUCTION

Purpose of Document

The manufacture, supply, installation, wiring, connecting, setting to work and commissioning of the works described in this document.

This specification relates to the Low Voltage Distribution system serving the RHSC-DCN Building and the associated Energy Centre.

This specification shall be read in conjunction with all other mechanical and electrical engineering services specifications and the Architectural drawings.

Description of Project

The new facility shall re-provide services from the Royal Hospital for Sick Children, Child and Adolescent Mental Health Service and the Department of Clinical Neurosciences in a single building adjoining the Royal Infirmary of Edinburgh at Little France.

The DCN part of the Facilities will have a physical link with the existing RIE Facilities specifically with the critical care unit.

The building is generally constructed from reinforced concrete.

The basement houses FM support facilities and the main building services heat distribution centres and electrical plant rooms.

Ventilation plantrooms are generally located at roof level and level 3,

A central Energy Centre shall be provided to the South of the hospital housing heating, CHP, standby generation, fuel storage and utility incomers.

2.0 SCOPE

The scope of work covered by this Performance Specification shall include the following:-

Nurse call systems

Controlled drugs cupboard alarms

Final run out conduits

Conduits in or on walls

3.0 PERFORMANCE SPECIFIED SYSTEMS

The Nurse Call Systems are performance specified systems and this specification outlines the requirements to be met by the systems.

4.0 SPECIFIC EXCLUSIONS

The following is specifically excluded from the scope of this Performance Specification:-

Power wiring

Main cable containment (other than final run outs of conduits)

5.0 INTERFACES AND DEMARCATIONS

The Nurse Call Systems shall include a display panel at the main nurse bases with provision for Fire Alarm and Medical Gas Signals.

6.0 APPLICABLE STANDARDS

All elements of the works shall be designed in accordance with the requirements of current legislation, regulations and standards stated in the Materials & Workmanship clauses.

The Nurse Call System shall be in accordance with SHTM 08-03.

7.0 DESIGN CRITERIA

Drawings

Project Co. shall prepare general arrangement drawings of the Nurse Call Systems.

The drawings shall indicate as a minimum:-

Nurse call panels including integration with other system alarms and indication
Power supply units
Call points
Hand sets
Reset points
Indicator lamps
Audible alarms
Cable containment requirements
Power requirements
Single line schematic diagram for each department
Single line schematic diagram for overall system
Interface arrangements with pneumatic tube transport system.
Interface arrangements with fire alarm indication.
Interface arrangements with Isolated Power Supply and UPS alarms.

8.0 LIAISON

Project Co. shall include for liaison with:-

Health and Safety Professionals. As well as the Health and Safety requirements of this specification, the Specialist Project Co. shall include for close liaison with Health and Safety professionals including the Hospital's Health and Safety Advisors and the CDM Co-ordinator and shall comply with the CDM Regulations and all Health and Safety regulations.

The Hospital. Project Co. shall include for liaison in conjunction with the Board with members of the Hospital's team with an interest in the planning and administration of the Nurse Call Systems.

9.0 SYSTEMS

9.1 Nurse Call Systems

System Type

The system shall be of the hard-wired, fully multiplexed type.

All nurse call panels and accessories shall be sealed and wipe clean and capable of being disinfected or sterilized between patient use to protect against the spread of infection.

Nurse Call Indicator Panels

The indicator panels at each staff base or other control stations shall be flush mounted in the staff base desk or local wall as indicated on the loaded 1:50 drawings and the room data sheets.

In addition to the facilities listed in W55, Clause 380A, the following facilities shall be provided on the staff base nurse call indicator panels:-

The nurse call panel shall interface with the pneumatic tube transport system to indicate arrival of a package at the local station.
The nurse call panel shall interface with the fire alarm system to display the information specified in Specification WW.A.P1.2.36.
The nurse call panel shall also integrate the remote Isolated Power Supply alarms (IPS) and UPS alarms as required by Specification WW.A.P.1.2.24
Medical gas alarm.
Door access control.

Staff bases shall be provided with touch screen LCD panels, these panels shall provide audible and visual indication of the calls being made. Porject Co. shall submit, via the Board, a pro forma for completion a minimum of 6 months prior to the final commissioning of the system, and shall allow for at least 2 No. complete iterations of this information.

Power Supplies and Control Units

Space is available in the Low Current section of the departmental electrical cupboards to accommodate power and control equipment. Such equipment shall not be installed in ceiling voids for reasons of fire risk mitigation.

A power supply unit shall be provided for each nurse call indicator panel.

Each power supply unit shall be dedicated to the nurse call system for the area it serves.

Power supply units shall be provided with spare capacity to drive 25% additional points.

Power supply units shall incorporate standby batteries. Batteries shall be valve regulated lead acid, 10 year life, type, and shall provide 5 minutes autonomy.

Action following mains failure/generator test conditions

The nurse call systems specified herein to be self-rebooting following mains failure and generator test conditions.

Outlets

Project Co. shall supply and install the nurse call outlets as indicated on the loaded 1:50 drawings and on the Room Data Sheets. Follow me indicator lights shall be developed by

All areas shall have flush nurse call services installed.

Equipment in wet areas shall be complete with a waterproof membrane.

Where the loaded drawings indicate multiple co-located nurse call outlets these may be incorporated onto the same outlet plate or unit. For example reassurance lamps might be indicated on the loaded drawings separately from pull cord units, or a push button call point and the associated reset might be indicated as separate units; in both of these, and similar, cases it will be acceptable to utilise outlets which incorporate both functions

Patient Call Handsets

Handsets, shall have an electrostatic discharge immunity sufficient to withstand, without damage, the effects of electrostatic discharge that can occur within the environment in which the equipment is expected to operate. They shall meet the ± 4 kV contact discharge and ± 8 kV air discharge electrostatic discharge tests specified in BS EN 61000-4-2:1995, IEC 61000-4-2:1995.

Handsets shall be of maintenance free, sealed for life design.

Where reading lights for patient use are provided at bedheads they shall be controlled by a switch at the door and at the bedhead and shall also be controlled by a switch on the nurse call handset.

Medical Services Trunking and Pendants

Project Co. shall allow for liaison time as necessary with the medical services trunking and pendant specialists so that the medical services trunking and pendants can be procured complete pre-wired with nurse call cabling and accessories.

For wards and similar areas where medical services trunking units are specified they shall incorporate the features required by the loaded 1:50 drawings, union drawings and the Room Data Sheets.

System Wiring

The main arterial runs of cable containment will be installed by outside the scope of this Performance Specification.

Final run outs of cables from the main arterial containment shall be run protected in plastic LSOH conduit.

In areas of non demountable ceilings, such as in Theatre suites, wiring shall be run in conduit arranged in a ‘loop-in’ basis to allow wiring without access to the ceiling void.

System Operation

Project Co. shall provide a “follow me” lamp system which shall indicate to staff the direction that they need to travel in, to locate the call.

Where there is a possibility of two directions of travel, 2 No. “follow me” lamps systems shall be installed, 1 No. indicating each direction.

The “follow me” lamps shall be ceiling mounted and shall be complete with amber lenses.

Nurse call sounders shall be provided.

The system shall permit the reconfiguration of the “follow me” lamps following the transferral of control of the nurse call system from one staff location to the next.

Dummy Plugs

Where hand held units are pulled out of the socket they shall immediately trigger a patient to staff call.

Fifty dummy plugs are to be provided free issue to the Board, when inserted within the socket removes this call trigger (when reset).

Crash Call

The crash call shall not form part of the nurse call system. Crash calls will be made via the phone system.

Software

Project Co. shall provide 2 N° copies of the software used on this project. Open protocol industry standard software must be used. All software shall be ‘backwards compatible’.

Modifications and Upgrades to the System

The system shall be specifically designed to easily accommodate upgrades and modifications to the system in line with changes in ward usage and nursing practice.

It shall be possible to carry out modifications to the system of operation, update location labels, and adjust tone output levels and flash patterns on-site.

Any future addition of new call and indicating units shall be accommodated by connecting equipment into the Nurse Call Network and running a Windows-based installation program. Upon completion of installation, the system shall automatically register the new devices and store their identity to assist with the future maintenance requirements of the system.

Equipment front-plates shall, in the main, be interchangeable and shall accommodate snap-in escutcheons accessible from the reverse of the plate.

Disability

The entire system must also be compliant with any additional requirements of BS 8300 (needs of disabled people).

W55 Nurse call systems

GENERAL

110 NURSE CALL SYSTEM General
System manufacturer: Board's choice.
Call initiation devices:
Patient handsets: Refer to loaded drawings and Room Data Sheets.
Patient pull cords: Refer to loaded drawings and Room Data Sheets.
Nurse emergency pull-switches: Refer to loaded drawings and Room Data Sheets.
Visual signals:
Ward entrance indicators: Required.
Direction “Follow me” indicators: Required.
Reassurance indicators: Integral within patient handsets.
Operating voltage to BS 7671: Extra low voltage.
Equipment interconnection: Wired.
Power supply units: Required.
Call indicator panels: Required.

120 CABLING AND CONTAINMENT Nurse call
Cable type: Submit design and cost proposals.
Containment: main routes on wire basket tray and rigid plastic conduit final run outs.
Rewireable installation: Required.
Concealed installation: Required.

SYSTEM PERFORMANCE

210 DESIGN
Design: Complete the design of the nurse call system in accordance with HTM 08-03.
Spare capacity: 25% of installed call initiation devices. Circuits, power supply units, nurse call panels shall have capacity for 25% growth.
Proposals: Submit drawings, technical information, calculations and manufacturers' literature.
Equipment electrical power: Provide electrical supplies to equipment requiring power.

220 MODE OF OPERATION
Patient to nurse:
Sequence of lamps: Operates in a steady mode until cancelled at the associated reset unit.
Nurse emergency pull-switches:
Sequence of lamps: Operates in a flashing mode until the emergency switch is returned to normal.
Operation: Must not affect patient or emergency calls from other points on the system.

PRODUCTS

310 PRODUCTS GENERALLY
Products: In accordance with HTM 08-03.

320 PATIENT HANDSETS General
Manufacturer: Board's choice.
Product reference: Submit proposals.
Housing:
Material: High impact white plastics.
Ingress protection: To BS EN 60529, IP 67.
Permanently illuminated nurse call push: Coloured orange with tactile feel and marked with the nurse symbol.
Actuation: Electrical.
Reassurance lamp: Manufacturer's standard.
Reset: Refer to loaded drawings and Room Data Sheets.
Television control: Channel selection and volume control.
Programme controls: Submit proposals.
Bedlight control switch: On and off, marked with lamp symbol.
Attachment clip: Submit proposals.
Cable: White cord with strain relief.
Length: Submit proposals.
Plug: Able to disengage from the socket when strain is applied to the cable.
Mounting type: Submit proposals.
Monitored call circuit: Initiated by a break in the cable or withdrawal of the plug.
Parking bracket: Required.

330 PATIENT PULL CORDS General
Manufacturer: Board's choice.
Product reference: Submit proposals.
Cord colour: Orange.
Acorn: Orange coloured with nurse symbol.
Switch action: Momentary.
Accessories: Integral reassurance lamp with amber lens.

340 NURSE EMERGENCY PULL-SWITCHES General
Type: Pull-on/ push-off action.
Manufacturer: Board's choice.
Product reference: Submit proposals.
Colour: Red.
Labelling on switch: 'Emergency Pull'.
Mounting: Refer to loaded drawings and Room Data Sheets.

350 VISUAL SIGNALS General
Manufacturer: Board's choice.
Product reference: Submit proposals.
Lamp: Manufacturer's standard.
Colour: Red.
Labelling: Unique call device identification code.
Mounting plate material: Zinc plated steel.
Finish: Match electrical accessories.
Mounting type: Ceiling.
Accessories: Integral sounder.

370 POWER SUPPLY UNITS General
Standard: To BS EN 60950-1.
Manufacturer: System manufacturer.
Product reference: Submit proposals.
Output power supply: Stabilized and overload protected.
Integral standby power supply: Required.

380A CALL INDICATOR PANELS General
Manufacturer: System manufacturer.
Product reference: Submit proposals.
Display: LCD.
Lamps: LED.
Number: Refer to loaded drawings and Room Data Sheets.
Day/ night volume control switch: Required.
Patient to nurse call tone: Fixed frequency. 1 s on, 9 s off, until all calls are cancelled.
Nurse to nurse call tone: Manufacturer standard, shall not sound similar to any other alarm tones eg: fire alarms.
Mute switch: Required.
Call transfer: facility required to transfer calls from any indicator panel to any other indicator panel Speech facility: Not required.

EXECUTION

620 EXECUTION GENERALLY
Execution: In accordance with HTM 08-03.

630 INSTALLATION OF PATIENT HANDSETS
Attachment: Flexible lightweight cable, and plug.

640 INSTALLATION OF PATIENT PULL CORDS
Location: Ceiling mounted.
Position within room: Refer to loaded drawings and Room Data Sheets.

650 INSTALLATION OF NURSE EMERGENCY PULL-SWITCHES
Location: Refer to loaded drawings and Room Data Sheets.

660 INSTALLATION OF VISUAL SIGNALS
Location:
Refer to loaded drawings and Room Data Sheets
Kitchen;
Nurses' station;
Overdoor;
Sister's office;
Utility room; and
Submit proposals.
Position: Refer to loaded drawings and Room Data Sheets.

670 INSTALLATION OF POWER SUPPLY UNITS
Location: Centrally within the ward area.
Position: Electrical cupboard.

680 INSTALLATION OF CALL INDICATOR PANELS
Location: Refer to loaded drawings and Room Data Sheets.

COMPLETION

910 TESTING AND COMMISSIONING
Testing and commissioning: In accordance with HTM 08-03.
Controls: Verify operation.
Alarm signalling: Verify operation.
Audible signal sound level output: Measure.
Results: Submit.

920 DOCUMENTATION
Operation and maintenance instructions, record drawings & test/commissioning certificates to be compatible with Zutec system
Operation and maintenance instructions: Submit.
Record drawings: Submit.

930 SPARES AND CONSUMABLES
Supply the following spares:
Patient handsets: 2 of each type.
Patient pull cords: 2 of each type.
Lamps: 2 of each type.
Dummy call device plugs: 1 for every 10 patient beds.

Specification Check / Revision Sheet

Project	**RHSC and DCN Edinburgh Hospitals**	Project Number	**G1547**
Service (s)	**Mechanical & Electrical**	Sheet	**WW AP.1.2.35 JB G1547**
Performance Specification Title	**Security Systems**	Date	**August 2014**
Prepared By	**PM**	Checked By	**JB**

Revision Ref.	Date of Revision	Page N$^{o(s).}$	Revision Details	Checked By
FT	December 2013	All	Final Tender	JB
FC	July 2014	All	Update for Financial Close	JB
FC	August 2014	All	Comments Incorporated	JB

RHSC and DCN EDINBURGH
SECURITY SYSTEMS

CONTENTS

1.0	GENERAL INTRODUCTION
2.0	DESCRIPTION OF PROJECT
3.0	SCOPE
4.0	PERFORMANCE SPECIFIED SYSTEMS
5.0	SPECIFIC EXCLUSIONS
6.0	INTERFACES AND DEMARCATIONS
7.0	APPLICABLE STANDARDS
8.0	DESIGN CRITERIA
9.0	LIAISON
10.0	SYSTEMS
10.1	ACCESS CONTROL
10.2	INTRUDER DETECTION AND ALARM SYSTEMS
10.3	CCTV
10.4	INTERCOM SYSTEM

MATERIALS AND WORKMANSHIP CLAUSES

W40	Access Control Systems
W41	Intruder Detection and Alarm Systems
W44	Closed Circuit Television Systems

1.0 GENERAL INTRODUCTION

Purpose of Document

The manufacture, supply, installation, wiring, connecting, setting to work and commissioning of the works described in this document.

This specification relates to the Low Voltage Distribution system serving the RHSC-DCN Building and the associated Energy Centre.

This specification shall be read in conjunction with all other mechanical and electrical engineering services specifications and the Architectural drawings.

2.0 DESCRIPTION OF PROJECT

The new facility shall re-provide services from the Royal Hospital for Sick Children, Child and Adolescent Mental Health Service and the Department of Clinical Neurosciences in a single building adjoining the Royal Infirmary of Edinburgh at Little France.

The DCN part of the Facilities will have a physical link with the existing RIE Facilities specifically with the critical care unit.

The building is generally constructed from reinforced concrete.

The basement houses FM support facilities and the main building services heat distribution centres and electrical plant rooms.

Ventilation plantrooms are generally located at roof level and level 2.

A central Energy Centre shall be provided to the South of the hospital housing heating, CHP, standby generation, fuel storage and utility incomers.

3.0 SCOPE

The scope of work covered by this Performance Specification shall include but not be limited to the following:-

Access Control System
Intruder Detection and Alarms System
Video door entry intercom
Intercom
Door interlocks
CCTV system
Panic Alarms

Final run outs of conduits
Conduits in or on walls
Interface with nurse call/panic alarms

4.0 PERFORMANCE SPECIFIED SYSTEMS

The Security System is a performance specified system and this specification outlines the requirements to be met by the system.

5.0 SPECIFIC EXCLUSIONS

The following is specifically excluded from the scope of this Performance Specification:-

Power wiring
Main cable containment (other than final run outs of conduits)
Programming of access control cards
Photographic equipment which the Board may require to process access control cards

6.0 INTERFACES AND DEMARCATIONS

The Security system shall be integrated with a host Internet Protocol network which will support communication, interaction, data transfer and data retrieval from and between the various engineering systems in the building. The Security system shall be connected to the host network via gateways. The Building Management System (BMS) will be provided with a Graphical User Interface which will permit the interrogation of the Security system down to component level. It is not intended that the BMS will control the Security system but rather will monitor component status and provide fault alarm indication at the Graphical User Interface.

The access control system shall be linked to the fire alarm system.

The CCTV system shall be linked to the intruder alarm and access control systems to provide specific viewing functions, such as presenting a picture on a monitor when an access card is presented to a reader, or when a movement detector activates.

Camera presets are required to respond to particular intruder alarms or access violation events, switching from low to high frame rate.

The external PA system shall be linked to cameras so the operator can ‘speak’ to persons in external spaces in an emergency or to reprimand/warn.

The design shall also take cognisance of the Board’s security requirements as detailed in the Board’s operational requirements.

Cabling

The main arterial runs of cable containment will be installed by the outside the scope of this Performance Specification.

Final run outs of cables from the main arterial containment shall be run protected in plastic LSOH conduit.

Cables shall be of the low smoke, zero halogen type (commonly referred to as LSOH, low smoke zero halogen).

In areas of non demountable ceilings, such as in Theatre suites, wiring shall be run in conduit arranged in a 'loop-in' basis to allow wiring without access to the ceiling void.

Power Supply

Final connection of system to power supplies:

7.0 APPLICABLE STANDARDS

All elements of the works shall be designed in accordance with the requirements of current legislation, regulations, standards stated in the Materials & Workmanship clauses and Secured by Design.

8.0 DESIGN CRITERIA

Electricity Supply Characteristics

LV power characteristics: 400/230 V, 3-phase, 50 Hz, 230 V, 1-phase, 50 Hz.

Drawings

As part of the development of the design the Project Co. shall prepare general arrangement drawings of the Security System based on the base drawings and coordinated with other services and building elements.

Drawings shall include as a minimum:-

Cable containment
Power supplies
Monitors
Cameras
Camera controls
Image storage
Schematics
System integration
Control and indication equipment
Entry phones
Card readers
System interfaces
Door contacts
Magnetic locks
Intercom stations
Door access controllers
Central p.c.
Break glasses
Request to exit buttons
Door interlocks
Panic Alarms

9.0 LIAISON

Project Co. shall include for liaison with:-

Health and Safety Professionals. As well as the Health and Safety requirements of this specification, Project Co. shall include for close liaison with Health and Safety professionals including the Hospital's Health and Safety Advisors and the CDM Co-ordinator and shall comply with the CDM Regulations and all Health and Safety regulations.

Building Control. Project Co. shall liaise, with and adhere to, the requirements of the Building Control Officer.

Any other member of the Project and Hospital teams concerned with the planning and administration of security systems and policies.

10.0 SYSTEMS

The final selection of all equipment and cabling shall be carried out by Specialist.

The design for all security systems shall be in line with the general principals of the approach recommended by Secured by Design.

Power Supplies and Control Units

Space is available in the Low Current section of the departmental electrical cupboards to accommodate power and control equipment. Such equipment shall not be installed in ceiling voids for reasons of fire risk mitigation.

Software

Project Co. shall provide 2 N° copies of the software used on this project. Open protocol industry standard software must be used. All software shall be 'backwards compatible'.

Low Current Systems action following mains failure/generator test conditions

The low current systems specified herein to be self-rebooting following mains failure and generator test conditions.

Low Current Systems with battery back-up

All battery systems shall be easy to test and change, it should be possible to replace the batteries without powering down or interrupting the operation of the system.

Warning shall be provided to the BMS when battery systems are failing and require maintenance replacement.

10.1 ACCESS CONTROL

General

Refer to security drawings for the locations of access controlled doors and video intercom units serving access controlled doors which represent the Boards requirements.

All entrance/exit doors will require door control systems with video entry systems and shall be operated internally by high level push to open buttons. Where video entry systems are being provided the position and quantity of cameras shall be such to enable the operator to view standing adults, children and persons in wheelchairs.

As a general rule of thumb, the following doors shall incorporate a controlled access system.

All external access doors
IT node room doors
Doors to wards
Main entrance doors to departments
FM & patient bed lifts
Additional restricted areas to be defined by NHS Lothian

The system shall be programmable to grant different patterns of access to staff and visitors.

Each ward, department and service area shall be capable of being locked down separately.

Proximity card readers shall be fitted to external personnel access doors into the Energy Centres.

The access control system should not inhibit emergency escape or access by the staff at any time.

The door access control system shall be integrated within the Nurse Call system, refer to PMI-069 and the Nurse Call performance specification WW AP.1.2.34 JB G1547.

Interfaces

The access control system shall also interface with the lifts and automatic doors.

Controlled doors along escape routes shall be capable of manual or automatic release in the event of the fire alarm system activating. Where escape runs from the public to the secure side of an access controlled door, the system shall operate such that the door is automatically released. Where escape runs from the secure to the public side of an access controlled door, the door shall be capable of manual release.

External Video Door Entry

The video door entry systems shall interface with the access control system and where indicated on the drawings, video door entry units shall be provided in order to communicate with personnel requesting entry. They also shall be provided with appropriate door release buttons.

The video camera shall be suitable for viewing of visitors in wheel chairs.

The external video door entry systems serving the main entrances shall be standalone systems and may utilise the external CCTV cameras if the location of the cameras is such to provide facial recognition of the persons, including wheel chair users, seeking entry to the security staff providing entry. The entry systems shall be provided with local control and facility to transfer to the main security room centre.

The external video door entry systems serving all other external entrance locations shall be standalone systems linked to the local staff base as indicated on the security layouts. The video door entry systems shall interface with the access control system and where indicated on the drawings, video door entry units shall be provided in order to communicate with personnel requesting entry.

They also shall be provided with appropriate door release buttons. The video camera shall be suitable for viewing of visitors in wheel chairs.

Internal Video Door Entry

The internal video door entry systems shall be standalone systems linked between the controlled door and the local staff base as identified on the security layouts.

The video door entry systems shall interface with the access control system and where indicated on the drawings, video door entry units shall be provided in order to communicate with personnel requesting entry. They also shall be provided with appropriate door release buttons.

The video camera shall be suitable for viewing of visitors in wheel chairs.

Proximity Cards

Proximity cards shall be incorporated within staff I.D. Badges with a facility to enable alterations to cards.

The access control system cards shall be compatible with the electric access control system in the RIE so that a single card can be used throughout.

Up to 15 templates shall be provided to allow the Board to programme and issue their access control card.

1No. PC and 1No. printer shall be provided to facilitate the above. No consumables to be provided.

Card Readers

These shall have anti-vandal fastenings and protective casings. External readers must be waterproofed to IP54 and a rain shield provided where the reader type requires further protection.

Break Glass Units

Break glass override units shall be provided on the secure side of all access control doors to locally interrupt the power circuit to the mag locks (for emergency use). This break glass unit shall be coloured green.

Request To Exit Units (RTEs)

RTEs shall generally be provided on the secure side of the access controlled door to allow normal egress from the secure area where indicated on drawings.

Door Locks

Magnetic locks shall be of the face-to-face type. Mag locks shall not be of the recessed Shearlock type.

10.2 INTRUDER DETECTION AND ALARM SYSTEMS

An Intruder Detection System shall be provided for out of hours security cover. PIR detectors shall be located in the following areas:-

Corridors

Ground floor rooms with windows

Internal rooms adjacent to any roof access points

Alarms shall link to the Security Control Centre. Local security systems alarm annunciation shall be provided with wards.

The details of the Intruder Alarms system shall be developed by the specialist.

Door Contacts

Door contacts shall be provided at each access controlled door to report to the access control system whether a door has been left ajar or a door has been forced open without the use of a RTE, card reader or fire alarm interface unit.

10.3 CCTV

The system shall adhere to the guidance given under Article 1 of Protocol 1 of the Human Rights Act 1998. Dynamic privacy control units shall be incorporated into the system whereby they can only be modified by means of an authorised password.

The systems shall present a secure and reassuring environment for staff, patients and visitors by providing appropriate security measures within the particular restraints imposed by clinical demand and personal freedom.

The CCTV system shall be installed, and provided with appropriate signage, in accordance with the requirements of the Data Protection Act and architect's details.

Video Signal Management

All cameras shall be linked back to the Control Centre with local supplementary monitors in accordance with the Clinical Requirements.

The main receptions & A&E receptions shall also incorporate a CCTV monitor position each with a flexible control facility to allow a combination of monitoring arrangements over two 20" flat LCD screens.

Local security systems alarm annunciation shall be provided within wards at the staff bases and at the central security room with facility for remote monitoring and control off site.

The scheduler shall be available for recording day, night and weekends so that different settings can be changed such as:-

Number of cameras to be recorded
Change record rates
Select activity on individual cameras (for example turn on camera during night periods only)
The stored video information shall be easily retrievable by entering the date and time.
The hard drives shall have the facility to be networked so that the system (live or stored data) may be viewed via a remote PC.
All cameras shall be provided with movement sensors so that movement detection can automatically set the CCTV cameras to a higher recording rate.
The system shall have the capability to increase camera record rates upon operation of intruder alarm detection or by operation of access controlled doors and/or external periphery doors

CCTV, Cameras, Servers and Image Storage

All CCTV cameras shall be IP-based. They shall be linked back to local hubs by fibre or Cat.6A cabling. Local data hubs shall be connected back to CCTV servers which shall in turn be linked to the main server room via a looped optical fibre network. CCTV cameras to be of the domed type.

CCTV cameras shall be programmed to 'tour' the viewable areas.

CCTV servers shall include input modules, processors and RAID storage providing 100% back-up. The system shall record at 25FPS per camera and provide 31 days storage; images shall be compressed, with the exception of a one hour period before and after alarm incidents, and be overwritten after 31 days of storage. Each CCTV server shall also be provided with an independent broadband connection to provide connectivity in the event of a network failure.

The system shall comprise a multi-channel digital recorder with a recording frame per second for each camera which is in accordance with a detailed engineering specification to be agreed with Lothian and Borders Police. The digital recorder shall also control playback of images onto a CCTV monitor.

The system shall be provided with a dedicated UPS of 30 minutes autonomy, in accordance with SHTM 06-01 recommendations, to protect against loss of data

Trigger Functions

The CCTV system shall be linked to the intruder alarm and access control systems to provide specific viewing functions, such as presenting a picture on a monitor when an access card is presented to a reader, or when a movement detector activates.

Internal CCTV

Project Co. shall provide a comprehensive colour CCTV system integrated within the BMS covering all corridors, reception, lift lobbies and other areas where members of the public gather or areas where access is to be restricted i.e. wards.

CCTV cameras shall be installed at the main entrances, waiting and circulation areas where the security and safety of hospital staff and patients is a concern but where free access for the visiting public is allowed. The CCTV systems are also to cover:-

All exits and entrances (including the Energy Centre entrance)
Ambulance parking
Vehicle bays
Fill points
Ward entrances
Children's play areas
Ambulance entry points
A&E departments
Car parks, estates yards, public spaces
Generator plant rooms
Main heating plant rooms
Corridors
Receptions
Lift lobbies
Other areas where members of the public gather or areas where access is to be restricted

All camera positions shall be provided with a local power supply unit with battery back-up provided to the server racks.

External CCTV

Project Co. shall provide a comprehensive colour CCTV system covering all external access points, car parking and external pedestrian/cycle circulation routes around the full site including FM, service yards, car parks, walkways, therapy gardens, boundary of/entrances to Site, boulevard, service tunnel etc, and the general road network.

External cameras shall be mounted on dedicated CCTV poles provided with a duct for power cabling and a second for comms cables.

External cameras to be capable of operating in reduced light conditions, cameras to be of the “low light” type.

External cameras shall be fully functional, set up with stops to avoid over viewing of adjacent properties.

External cameras covering the car parking areas shall be provided with number plate recognition capability.

The external CCTV system shall be testing using the Rotakin test in accordance with BS EN 50132-7. Human recognition (50% Rotakin) shall be provided in all areas.

10.4 INTERCOM SYSTEM

General

The intercom system fitted as part of the door entry system is described in the access control section.

This section relates to standalone intercom systems as indicated on the drawings.

The final positions of the Intercom Master Stations, Sub-Stations and Power Supplies shall be determined during the detailed design.

System Operation

The system shall be local standalone systems and shall provide total hands free open voice communication operation after the initiation of a call, with full duplex speech. The Master Station handset will allow communication privately or press-to-talk.

In the event of a user attempting to make a call to a station already in operation an engaged signal will be received.

10.5 PANIC ALARMS

General

The system shall satisfy the following requirements.

Panic alarms shall be integrated with the security system and BMS to allow:-

The unlocking of doors, initiated by the Fire Alarm system, along all escape routes to assist evacuation in an emergency.
Automatic locking of doors within the Accident & Emergency Departments if a panic button is pressed.
Activation of a security camera in a particular position when a door is opened to provide a picture of the person entering.

All panic alarms fixed and mobile shall be monitored centrally by the on-site Security Control Centre and shall provide a description of the alarm activation and the precise location of staff members in distress.

Fixed Panic Alarms

Locations as identified in the architects ADB drawings shall be fitted with panic alarms in the form of a discrete push button fixed to the underneath of the desks and hardwired to the security system.

At these locations a loud alarm shall be raised at the scene of the incident on activation of a panic alarm button.

Staff Mobile Panic Alarms/Personal Attack Alarms

Staff mobile panic alarms shall be provided for:

Emergency Department
Imaging Department
Emergency Decontamination
Out of Hours Service Areas

Staff mobile panic alarms shall be linked to reception desks of the relevant department.

An NHS Wi-Fi network shall be installed throughout the Hospital to facilitate the use of personal attack alarms.

The Wi-Fi/radio-frequency network infrastructure shall be compatible with the personal security device to provide lone-worker protection.

W40 Access control systems

GENERAL

110 ACCESS CONTROL SYSTEM GENERALLY
Standards: To BS EN 50133-1 and in accordance with BS EN 50133-7.
Manufacturer: Submit proposals.
Registration:
A member of BSIA;
A Gold member of NSI;
A Silver member of NSI; or
A member of SSAIB.
Operation in the event of mains failure: Access point remain secure.
Tokens: Proximity cards and Submit design and cost proposals.
Readers: Proximity readers.
Standby battery supply: 24 h (VRLA with 10 year life).
Locking mechanisms: Magnetic locks (face-to-face type) and strike plates. Magnetic locks shall not be of the recessed Shearlock type.
Controls: Board's choice.
Accessories:
Access control point status monitoring devices;
Card printer;
Digital camera;
Emergency break glass units; and
Request to exit buttons.

120 AUDIO INTERCOM SYSTEM
Entrance panel: Required.
Remote handsets: as drawings.
Manufacturer: Submit proposals.
Product reference: Submit design and cost proposals.
Audio communication: Two way.
Remote door opening via handset: Required.
Calling method: Push button.

130 VIDEO INTERCOM SYSTEM
Entrance panel: Required.
Remote handsets: as drawings.
Manufacturer: Submit proposals.
Product reference: Submit design and cost proposals.
Audio communication: Two way.
Video communication: One way.
Video image: Colour.
Camera type: Wide angle.
Remote door opening via handset: Required.
Calling method: Push button.
Mounting Height: 1200mm to centre of lens unless specified otherwise on architect's elevation drawings.

140 CABLING AND CONTAINMENT general
Cable type: Board's choice.
Containment: Cable basket as section Y63.
Rewireable installation: Required.
Concealed installation: Required.

SYSTEM PERFORMANCE

210 DESIGN
Design: Complete the design of the access control system.
Proposals: Submit drawings, technical information, calculations and manufacturers' literature.

220 ACCESS CONTROL POINTS GENERALLY
Recognition classification to BS EN 50133-1: Class 2.
Access classification to BS EN 50133-1: Class B.
Environmental classification to BS EN 50133-1: Submit proposals.
Number of transactions (minimum): Submit proposals.

230 CONNECTION TO FIRE DETECTION AND ALARM SYSTEMS
Operation in the event of a fire signal: Access points open if escape needs to pass through secure area.

240 INTEGRATION WITH OTHER ALARM AND SECURITY SYSTEMS
Objectives: Fully integrated security system operating on engineering IT network via Internet Protocol. Refer to Particular Specification..
Systems to be integrated:
Closed circuit television systems as section W44;
Intruder detection and alarm systems as section W41;
Fire detection and alarm systems as section W50;
Central controls and building management systems as section Y40; and
Submit proposals.

PRODUCTS

310 MULTIPLE TECHNOLOGY CARDS
Type: Proximity card.

320 PROXIMITY CARDS
Standard: To BS ISO/IEC 10373-6.
Type: Non-contact 125 kHz proximity multi-chip and antenna without battery.
Physical characteristics: To BS ISO/IEC 14443-1.
Code: Unique, pre-programmed to BS 7227.
Unique, visible identification number: Required.
Manufacturer's guarantee against electronic failure (minimum): 25 years.
Accessories: Slot and neck strap.

360 PROXIMITY READERS
Manufacturer: Board's choice.
Product reference: Submit proposals.
Operating frequency: 125 kHz.
Proximity read range: Submit proposals.
Visual indication: LED displaying red when access point status secure, green when unlocked.
Audio status indication: Multiple tone sequences.
Tamper detection: Required.
Colour: Submit proposals.

390 INTERCOM ENTRANCE PANELS
Entrance panel call buttons: To suit.
Microphone: Integral.
Speaker: Integral.
Camera: Integral within video intercom entrance panels.
Finish: White.
Backlight: Required.
Audio tone when button pressed: Required.

400 ACCESS CONTROL CABLES
Standard: To BS 4737-3.30.
Conductor:
Nominal diameter: Board's choice.
Stranding: Board's choice.
Sheath: LSZH.
Cores (minimum): Board's choice.

420 MAGNETIC LOCKS AND STRIKE PLATES
General: Magnetic locks shall not be of the recessed Shearlock type.
Manufacturer: Board's choice.
Product reference: Submit proposals.
Operating voltage: Board's choice.
Operation: Fail unlocked.
Holding force (minimum): 8 kN.
Material and finish: Submit proposals.
Instant release circuit: Required.
LED status indication: Not required.

440 INTERCOM REMOTE HANDSETS/ WALL MOUNTED DEVICE
Buzzer: Integral – Activates when door open and shall have facility for user override.
Monitor: Integral within video remote handsets/ wall mounted device.
Door release button: Required.
Mounting: Wall.
Finish: White.

450 ACCESS CONTROL SYSTEM CONTROLLERS
Manufacturer: Board's choice.
Product reference: Submit proposals.
Type: Microprocessor based.
Administration access: Password protected.
Synchronise date and time: Once a day.
ODBC compatible database:
Users (minimum): 12000.
Information fields per user:
Access period.
Access points.
Department.
Email address.
First name.
Holiday schedule.
Last name.
Photograph.

Telephone.
Token expiry.
Token number.
Visitor status.
Spare information fields per user (minimum): Submit proposals.
Import and export of database in ASCII format: Required.
Monitor and record the following transactions and events:
Forced access.
Pass back attempt.
Tamper.
Transaction invalid.
Transaction timed out.
Transaction valid.
Events and transactions: Data and time stamp.
Customised event alarms: Display.
Control features:
Access point status monitoring.
Anti pass back control: Global.
Auto unlock at predefined times.
Configure access groups, grids and levels.
Configure access point unlock time.
Configure time grids, zones and slots.
Daylight time saving.
Display access point status on site and layout plans.
Reports: Provide searchable information.
Transaction and event reports:
By access point.
By area.
By department.
By time and date period.
By transaction type.
By user.
Other reports:
Occupancy reports.
Time and attendance reports.
Publishing: Export to pdf and Print.

455 DOOR CONTROLLERS
Number of doors per controller: Board's choice.
Door lock battery backup: Within system controller (VRLA with 10 year life).
Time between token presentation and door unlock (maximum): 0.3 s.
Enclosure:
Material: Steel.
Finish: Board's choice.
Tamper alarm: Required.

460 PERSONAL COMPUTERS
Manufacturer: Board's choice.
Product reference: Board's choice.
Processor: Board's choice.
Read only memory (RAM): Board's choice.
Hard disk:

Capacity: Submit proposals.
Speed: Submit proposals.
Video card: Submit proposals.
Sound card: Board's choice.
DVD/ CD rewriter: Required.
Network card: 10/100 base T Ethernet.
Modem: V.92 56 kbits/s data, fax and voice..
Monitor: 20 inch LCD
Keyboard and mouse: Wireless.
Operating system: Windows XP.

465 ACCESS CONTROL POINT STATUS MONITORING DEVICES
Type: Magnetic reed switch.
Material: Aluminium.
Mounting: Recessed.

470 CARD PRINTERS
Type: Dual sided.
Print:
Method: Colour dye sublimation.
Resolution: 300 dpi.
Operation: Double sided.
Speed (minimum): 90 cards/ h.
Laminate: Hologram.
Card feeder capacity: 200.

480 EMERGENCY BREAK GLASS UNITS: Generally
Manufacturer: Board's choice.
Product reference: Board's choice.
Frangible element: Non-resettable.
Colour: Green.
Labelling: "EMERGENCY DOOR RELEASE".
Mounting: Semi-recessed.

480 EMERGENCY BREAK GLASS UNITS: DCFP department
Type: Vandal resistant.
Manufacturer: Board's choice.
Product reference: Board's choice.
Frangible element: Non-resettable.
Colour: Green.
Labelling: "EMERGENCY DOOR RELEASE".
Mounting: Semi-recessed.

490 REQUEST TO EXIT BUTTONS
Manufacturer: Board's choice.
Product reference: Board's choice.
Material: Plastics.
Finish: White.
Engraving: "PUSH TO EXIT".
Operation: Momentary.
Illuminated button: Not required.

EXECUTION

620 INSTALLING ACCESS CONTROL SYSTEMS
Standard: To BS EN 50133-1 and in accordance with BS EN 50133-7.
Location of the access controller: Submit proposals.
Token reader: Install next to system controller.

630 INSTALLING CABLING Generally.
Standard: To BS 7671.
Route: Submit proposals.
Timing: Do not start internal cabling until building enclosure provides permanently dry conditions.
Cables: Install in one length.
Cable pulling: Submit proposals. Do not overstress. Prevent kinks and twisting of the cable.
Cables passing through walls: Sleeve with conduit or pipeduct. Bush at both ends.
Jointing: At equipment and terminal fittings only.

650 INSTALLING READERS generally
Mounting:
Type: Wall.
Height (finished floor level to underside of equipment): 900 mm.

690 INSTALLING INTERCOM SYSTEMS generally
Entrance panel:
Mounting: Recessed.
Location: Submit proposals.
Height (finished floor level to underside of equipment): 1300 mm.
Handset locations: as drawings.
Labelling: Identify call buttons.

COMPLETION

910 TESTING AND COMMISSIONING GENERALLY
Standard: To BS EN 50133-1.
System commissioning agent: Board's choice.
Notice before commencing tests (minimum): Board's choice.
System programming:
Configure user database and tokens.
Number of users: 12000.
Configure access permissions.
Configure time grids, zones and slots.
Cable testing:
Insulation resistance: Submit results.
Earth continuity: Submit results.
Access points: Verify the correct operation of reader and lock mechanism. Configure unlock times.
Standby supply: Verify operation in the event of a mains failure. Check capacity and submit results.
Charger: Verify operation.
Equipment tamper detection: Verify operation.

920 EQUIPMENT LABELLING AND SYSTEM DIAGRAMS
Access points and door controllers: Label with a unique identification code.
System diagram: Provide showing the location and identity of all system equipment.
Location: Next to the access system controller.

930 AUDIO INTERCOM SYSTEM TESTING AND COMMISSIONING
Call button: Verify the operation of call buttons.
Audio communication: Verify 2 way audio communication.
Remote release: Verify the operation of remote door release facilities.

940 VIDEO INTERCOM TESTING AND COMMISSIONING
Call button: Verify the operation of call buttons.
Audio communication: Verify 2 way audio communication.
Video image: Verify the operation of the video camera and remote display.
Remote release: Verify the operation of remote door release facilities.

950 DOCUMENTATION
Operation and maintenance instructions, record drawings & test/commissioning certificates to be compatible with Zutec system
Operation and maintenance instructions: Submit.
Record drawings: Submit.
Commissioning Certificate: Submit.
Test Certificate: Submit.

960 SPARES AND CONSUMABLES
Tokens to be supplied: none.

W41 Intruder detection and alarm systems

110 INTRUDER DETECTION AND ALARM SYSTEMGENERALLY
Standard: To BS EN 50131-1.
System manufacturer: Submit proposals.
Registration: Submit proposals.
Grade: Grade 2.
Power supply: Type A.
Environmental classification: Class I.
Areas to be protected: Refer to Particular.
Perimeter protection: Submit design and cost proposals.
Detectors: Submit proposals.
Equipment interconnectivity: Wired.
Cabling and containment:
Cable type: Submit design and cost proposals.
Containment: Rigid conduit, as section Y60.
Rewireable installation: Required.
Concealed installation: Required.
Warning devices:
Internal: Submit design and cost proposals.
External: Submit design and cost proposals.
Signalling method: Submit design and cost proposals.
Control and indicating equipment (CIE): Submit design and cost proposals.
Accessories: Submit design and cost proposals.
Completion: Submit design and cost proposals.

SYSTEM PERFORMANCE

210 DESIGN
Design: Complete the design of the intruder detection and alarm system.
Proposals: Submit drawings, technical information, calculations and manufacturers' literature.

225 ZONING AND DEVICE IDENTIFICATION
Zoning: Divide the installation into separately controlled and identifiable zones.
Device identification: Individual address.

230 SPARE CAPACITY
Spare capacity (minimum): 25%.

235 CONNECTION TO FIRE DETECTION AND ALARM SYSTEMS
Fire and fault signal: Accept and relay to the alarm receiving centre.

246 INTEGRATION WITH CCTV SYSTEMS
Integration: In accordance with BS 8418.

250 DIGITAL COMMUNICATORS
Standards: To BS EN 50136-1-3 and BS EN 50136-2-3.

252 DIRECT LINE SIGNALLING
Standards: To BS EN 50136-1-2 and BS EN 50136-2-2.

255 PREVENTION OF SETTING FOR GRADE 2 SYSTEMS
Conditions preventing system setting: Submit proposals.

261 SUPPLEMENTARY PROCESSING OF SIGNALS FOR GRADE 2 SYSTEMS
System status, set:
Response to hold-up signal/ message: Submit proposals.
Response to fault signal/ message: Submit proposals.
ATS message type in response to tamper signal/ message: Submit proposals.
System status, unset:
Response to hold-up signal/ message: Submit proposals.
Response to tamper signal/ message: Submit proposals.
ATS message type in response to hold-up signal/ message: Submit proposals.
ATS message type in response to tamper signal/ message: Submit proposals.
ATS message type in response to fault signal/ message: Submit proposals.

265 SUPPLEMENTARY INDICATIONS FOR GRADE 1 AND 2 SYSTEMS
System set: Submit proposals.
During setting: Submit proposals.
During unsetting: Submit proposals.

272 NOTIFICATION REQUIREMENTS FOR GRADE 2 SYSTEMS
Means of notification: Submit proposals.

280 SUPPLEMENTARY TAMPER DETECTION FOR GRADE 2 SYSTEMS
Tamper detection of junction boxes: Submit proposals.
Additional forms of tamper detection: Submit proposals.

286 MONITORING SUBSTITUTION OF GRADE 1, 2 AND 3 SYSTEM COMPONENTS
Substitution of system components: Submit proposals.
Substitution of signals/ messages: Submit proposals.
Timing:
Substitution of system components: Submit proposals.
Substitution of signals/ messages: Submit proposals.

290 EVENT RECORDING FOR GRADE 2 SYSTEMS
Memory capacity (minimum): Submit proposals.
Endurance of memory after system power failure (minimum): 30 days.
Event recording functions: Submit proposals.

PRODUCTS

310 ACOUSTIC DETECTORSGENERALLY.
Standard: To BS 4737-3.6.
Manufacturer: Submit proposals.
Product reference: Submit proposals.
Mounting: Submit proposals.
Features: Submit proposals.

312 BEAM INTERRUPTION DEVICESGENERALLY.
Standard: To BS 4737-3.12.
Manufacturer: Submit proposals.
Product reference: Submit proposals.
Mounting: Submit proposals.
Features: Submit proposals.

314 CAPACITIVE PROXIMITY DETECTORSGENERALLY.
Standard: To BS 4737-3.13.
Manufacturer: Submit proposals.
Product reference: Submit proposals.
Mounting: Submit proposals.
Features: Submit proposals.

316 COMBINED PASSIVE INFRARED AND MICROWAVE DETECTORSGENERALLY.
Standard: To BS EN 50131-2-4.
Manufacturer: Submit proposals.
Product reference: Submit proposals.
Mounting: Submit proposals.
Features: Submit proposals.

317 COMBINED PASSIVE INFRARED AND ULTRASONIC DETECTORSGENERALLY
Standard: To BS EN 50131-2-5.
Manufacturer: Submit proposals.
Product reference: Submit proposals.
Mounting: Submit proposals.
Features: Submit proposals.

318 DELIBERATELY OPERATED DEVICESGENERALLY
Standard: To BS 4737-3.14.
Type: Submit proposals.
Manufacturer: Submit proposals.
Submit proposals: Submit proposals.
Operating mechanism: Submit proposals.
Key reset: Required.
Operating method: Submit proposals.
Sound level during operation: Submit proposals.

319 MICROWAVE DETECTORSGENERALLY
Standard: To BS EN 50131-2-3.
Manufacturer: Submit proposals.
Product reference: Submit proposals.
Mounting: Submit proposals.
Features: Submit proposals.

320 PASSIVE INFRARED DETECTORSGENERALLY.
Standard: To BS EN 50131-2-2.
Manufacturer: Submit proposals.
Product reference: Submit proposals.
Mounting: Submit proposals.
Features: Submit proposals.

322 PROTECTIVE SWITCHESGENERALLY.
Standard: To BS 4737-3.3.
Type: Magnetic reed switch.
Manufacturer: Submit proposals.
Product reference: Submit proposals.
Circuit configuration: Submit proposals.
Material: Submit proposals.
Mounting: Submit proposals.
Features: Submit proposals.

326 ULTRASONIC DETECTORSGENERALLY
Standard: To BS 4737-3.5.
Manufacturer: Submit proposals.
Product reference: Submit proposals.
Mounting: Submit proposals.
Features: Submit proposals.

328 VIBRATION DETECTORSGENERALLY
Standard: To BS 4737-3.10.
Manufacturer: Submit proposals.
Product reference: Submit proposals.
Mounting: Submit proposals.
Features: Submit proposals.

330 VOLUMETRIC CAPACITIVE DETECTORSGENERALLY.
Standard: To BS 4737-3.8.
Manufacturer: Submit proposals.
Product reference: Submit proposals.
Mounting: Submit proposals.
Features: Submit proposals.

340 ELECTRONIC SOUNDERS
Manufacturer: Submit proposals.
Product reference: Submit proposals.
Colour: Submit proposals.

345 LED CLUSTERS
Manufacturer: Submit proposals.
Product reference: Submit proposals.
Colour: submit proposals.

350 VIBRATING PAGERS
Manufacturer: Submit proposals.
Product reference: Submit proposals.

355 XENON BEACONS
Manufacturer: Submit proposals.
Product reference: Submit proposals.
Colour: submit proposals.

360 EXTERNAL SOUNDERS
Type: Self activating bell, foam proof.
Manufacturer: Submit proposals.
Product reference: Submit proposals.
Stand by power supply: Integral.
Colour: Submit proposals.
Strobe: Integral.
Visual indication: LED.
Ingress protection to BS EN 60529: IP65.

400 CONTROL AND INDICATING EQUIPMENT (CIE)GENERALLY
Standard: To BS EN 50131-1.
Manufacturer: Submit proposals.
Product reference: Submit proposals.
Controller: Microprocessor based.
Features:
Event time recording.
Alarm and fault indication.

450 REMOTE KEYPADS
Backlight: Required.
Individual zone identification: Required.
Individual device identification: Required.
Deliberately operated button: Integral.

480 MULTI-CORE INTRUDER ALARM CABLES
Standard: To BS 4737-3.30.
Conductor: 0.22 m², 7 x 0.2 mm stranding.
Sheath: LSZH.
Cores (minimum): Submit proposals.

EXECUTION

620 INSTALLING INTRUDER ALARM CONTROL AND INDICATING EQUIPMENT
Standards: To BS 7671 and BS EN 50131-1.
Location: Submit proposals.
Main power supply: From an unswitched fused connection unit. Permanently wire with a dedicated circuit from the building's main low voltage switchboard.
Dummy external sounder: Required.
Location: Submit proposals.

630 INSTALLING CABLES
Route: Submit proposals.
Device wiring: Individual radial circuit from control panel.
Timing: Do not start internal cabling until building enclosure provides permanently dry conditions.
Cables: Install in one length.
Cable pulling: Submit proposals. Do not overstress. Prevent kinks and twisting of the cable.
Cables passing through walls: Sleeve with conduit or pipeduct. Bush at both ends.
Jointing: At equipment and terminal fittings only.

635 INSTALLING ACOUSTIC DETECTORS Generally.
Mounting: Recessed.
Height (finished floor level to underside of equipment): 3000 mm.

640 INSTALLING BEAM INTERRUPTION DEVICES Generally.
Mounting: Recessed.
Height (finished floor level to underside of equipment): Submit proposals.

645 INSTALLING CAPACITIVE PROXIMITY DEVICES Generally.
Mounting: Recessed.
Height (finished floor level to underside of equipment): Submit proposals.

650 INSTALLING COMBINED PASSIVE INFRARED AND MICROWAVE DETECTORS Generally.
Mounting: Recessed.
Height (finished floor level to underside of equipment): Submit proposals.

651 INSTALLING COMBINED PASSIVE INFRARED AND ULTRASONIC DETECTORS Generally
Mounting: Recessed.
Height (finished floor level to underside of equipment): Submit proposals.

655 INSTALLING DELIBERATELY OPERATED DEVICES Generally.
Mounting: Recessed.
Height (finished floor level to underside of equipment): Submit proposals.

660 INSTALLING MICROWAVE DETECTORS Generally.
Mounting: Recessed.
Height (finished floor level to underside of equipment): Submit proposals.

665 INSTALLING PASSIVE INFRARED DETECTORS Generally.
Mounting: Recessed.
Height (finished floor level to underside of equipment): Submit proposals.

670 INSTALLING PROTECTIVE SWITCHES Generally.
Mounting: Recessed.
Height (finished floor level to underside of equipment): Submit proposals.

675 INSTALLING ULTRASONIC DETECTORS Generally.
Mounting: Recessed.
Height (finished floor level to underside of equipment): Submit proposals.

680 INSTALLING VIBRATION DETECTORS Generally.
Mounting: Surface mounted.
Height (finished floor level to underside of equipment): Submit proposals.

685 INSTALLING VOLUMETRIC CAPACITIVE DETECTORS Generally.
- Mounting: Recessed.

Height (finished floor level to underside of equipment): Submit proposals.

690 INSTALLING ELECTRONIC SOUNDERS Generally.
Mounting: Recessed.
Height (finished floor level to underside of equipment): Submit proposals.

695 INSTALLING LED CLUSTERS Generally.
Mounting: Recessed.
Height (finished floor level to underside of equipment): Submit proposals.

700 INSTALLING XENON BEACONS Generally.
Mounting: Recessed.
Height (finished floor level to underside of equipment): Submit proposals.

710 INSTALLING REMOTE KEYPADS Generally.
Mounting: Recessed.
Height (finished floor level to underside of equipment): 1300 mm.

COMPLETION

905 TESTING AND COMMISSIONING GENERALLY
Standard: To BS EN 50131-1.
System commissioning agent: Submit proposals.
Notice before commencing tests (minimum): 2 weeks.
Cable testing
Insulation resistance: Submit results.
Earth continuity: Submit results.
Charger: Verify operation.
Detection devices: Verify the operation, and adjust to provide maximum coverage.
Device voltage: Submit details of the voltage at powered devices.
Local warning devices: Verify operation.
Remote signalling: Verify operation.
Standby supply: Verify operation in the event of a mains failure. Check capacity and submit results.
Tamper detection: Verify operation.
Timers: Set up and adjust entry and exit timers.
User codes: Set up and commission.

910 DEVICE IDENTIFICATION AND TESTING
Device list: Before commissioning submit proposals, including proposed device, zone and group names.
Zone diagram: Before commissioning submit proposals.
Device identification: Label devices with a unique address corresponding to that used by the CIE.
Device testing: Verify the operation of each device. Submit a schedule of devices, including the device test methods and results.

915 SYSTEM SOAK TESTING
Soak test: Undertake when construction works are complete, but before handover and before connection to a remote alarm receiving centre.
Period: 14 days.
Re-test after remedial works.

920 STANDBY BATTERY TESTING

Mains power supply: Isolate.

Quiescent mode: Measure current supplied by standby source when intruder detection and alarm system is operating in the quiescent mode. Submit results.

Alarm mode: Measure current supplied by standby source when intruder detection and alarm system is operating in the alarm mode. Submit results.

925 TESTING ACTUATION, INTEGRATION AND INTERFACING WITH ALARM AND SECURITY SYSTEMS

Connections with other systems and equipment: Verify and demonstrate operation of the systems and equipment under fire and fault conditions. Submit results.

935 DOCUMENTATION

Standard: To BS EN 50131-1.

Operation and maintenance instructions, record drawings & test/commissioning certificates to be compatible with Zutec system

Operation and maintenance manual: Submit.

Record drawings: Submit.

Commissioning Certificate: Submit.

Test Certificate: Submit.

940 LOG BOOK

Type: Hard back cover embossed "INTRUDER DETECTION AND ALARM SYSTEM LOG BOOK" with A4 lined paper, minimum 100 pages.

Number of copies: 3.

945 SPARES AND CONSUMABLES

Supply the following spares:

Deliberately operated devices: 2 of each type.

Detectors: 2 of each type.

Protective switches: 2 of each type

W44 Closed circuit television systems

GENERAL

110 CCTV SYSTEM Internal areas
System: In accordance with BS EN 50132-7 and Home Office Scientific Development Branch CCTV operational requirements manual.
Manufacturer: Board's choice.
Registration: Submit design and cost proposals.
Format: Consultative Committee for International Radio (CCIR) PAL colour, 1080 scan
lines/frame, 25 frames/second, 16:9 aspect ratio.
Purpose: To provide a secure and reassuring environment for staff, patients and visitors.
Type: Digital.
Surveillance equipment: Cameras.
Controller: Control matrix.
Telemetry transmitter and receivers: Submit design and cost proposals.
Number of monitors: Camera: monitor ratio (maximum)10:1.
Data collection: Submit design and cost proposals.
Accessories:
Camera brackets;
CCTV signage;
Internal camera housings; and
Submit design and cost proposals.

110A CCTV SYSTEM External areas
System: In accordance with BS EN 50132-7 and Home Office Scientific Development Branch CCTV operational requirements manual.
Manufacturer: Board's choice.
Registration: Submit design and cost proposals.
Format: Consultative Committee for International Radio (CCIR) PAL colour, 1080 scan lines/frame, 25 frames/second, 16:9 aspect ratio.
Purpose: To provide a secure and reassuring environment for staff, patients and visitors..
Type: Digital.
Surveillance equipment: Cameras.
Controller: Control matrix.
Telemetry transmitter and receivers: Submit design and cost proposals.
Number of monitors: Camera: monitor ratio (maximum)10:1.
Data collection: Submit design and cost proposals.
Accessories:
Camera brackets;
CCTV signage;
External camera housings;
Towers; and
Submit design and cost proposals.

120 CABLING AND CONTAINMENT Internal areas
Cable type: Board's choice.
Containment: Cable basket.
Rewireable installation: Required.
Concealed installation: Required.

120A CABLING AND CONTAINMENT External areas
Cable type: Board's choice.
Containment: Submit design and cost proposals.
Rewireable installation: Required.
Concealed installation: Required.

SYSTEM PERFORMANCE

210 DESIGN
Design: Complete the design of the CCTV system.
Proposals: Submit drawings, technical information, calculations and manufacturers' literature.

240 DIGITAL STORAGE
Rate per camera (minimum) : 25 frames/s.
Compression of images : Yes, with the exception of a one hour period before and after an alarm incident.
Data over-writing period : 31 days.
Back-up storage: 100% back-up required.

250 INTEGRATION WITH OTHER ALARM AND SECURITY SYSTEMS
Objectives: To integrate CCTV system with other systems.
Systems to be integrated:
Intruder detection and alarm system
BMS
Access control
External PA system
Laboratory CCTV installation.

PRODUCTS

310 CAMERAS: INTERNAL
Camera Type: Domed.
Manufacturer: Board's choice.
Product reference: Submit proposals.
CCD sensor format: Submit proposals.
Resolution (minimum): 1080 lines/frame.
Power supply: Extra low voltage.
Camera synchronising: Submit proposals
Signal to noise ratio (minimum): Submit proposals.
Image strength with 75 ohm terminations: 1 V peak to peak.
Automatic gain control: Required.
White balance control: Automatic.
Backlight compensation: Required.
Present gamma settings: 1 and 0.45.
Iris: Automatic.
Shutter speed adjustment: Automatic.
Infrared sensitive: Not-required.
Colour to monochrome switching: Automatic at pre-determined threshold (25 lx)
Lens mounts: Submit proposals.
Lens:
Type: Variable focal length.
Filter: Submit proposals.

Mounting points: Submit proposals.
Accessories: Submit proposals.

310A CAMERAS: EXTERNAL

Camera Type: “Low Light”, domed.
Manufacturer: Board's choice.
Product reference: Submit proposals.
CCD sensor format: Submit proposals.
Resolution (minimum): 1080 lines/frame.
Power supply: Extra low voltage.
Camera synchronising: Submit proposals
Signal to noise ratio (minimum): Submit proposals.
Image strength with 75 ohm terminations: 1 V peak to peak.
Automatic gain control: Required.
White balance control: Automatic.
Backlight compensation: Required.
Present gamma settings: 1 and 0.45.
Iris: Automatic.
Shutter speed adjustment: Automatic.
Infrared sensitive: Not required, to be “low light” type.
Colour to monochrome switching: Automatic at pre-determined threshold (25 lx)
Lens mounts: Submit proposals.
Lens:
Type: Variable focal length.
Filter: Submit proposals.
Mounting points: Submit proposals.
Accessories: Submit proposals.

330 PAN AND TILT UNITS: Internal

Camera Type: Dome.
Manufacturer: Board's choice.
Product reference: Submit proposals.
Pan angle: 5°-350°.
Tilt angle: -20°-90°.
Speed control: Submit proposals.
Pan speed: Submit proposals.
Tilt speed: Submit proposals.

330A PAN AND TILT UNITS: External

Camera Type: “Low Light”, domed.
Manufacturer: Board's choice.
Product reference: Submit proposals.
Pan angle: 5°-350°.
Tilt angle: -20°-90°.
Speed control: Submit proposals.
Pan speed: Submit proposals.
Tilt speed: Submit proposals.

340 CONTROL MATRIX

Manufacturer: Board's choice.
Product reference: Submit proposals.
Video inputs: Submit proposals.
Video outputs: Submit proposals

Adjustable dwell time per camera image: Submit proposals
Interval: Submit proposals.
Video inputs:
Unused: Automatic skip.
Lost: Alarm displayed on monitor.
Spot monitor output: Submit proposals.
Control keyboard: Tactile push buttons with individual LED indication.
Manual selection of camera images: Submit proposals.
Screen mode: Sequential switching and split screen.
Titling: Time, date, and camera identification.
Video motion detection: Required.
Alarm outputs: Submit proposals.

350 TELEMETRY TRANSMITTERS
Manufacturer: Board's choice.
Product reference: Submit proposals.
Control functions:
Autopan;
Auxiliary latching function;
Auxiliary momentary action function;
Focus;
Iris;
Lamps;
Pan;
Power; and
Tilt.
Alarm inputs: Submit proposals.
Control keyboard: Tactile push buttons with individual LED indication.
Control via coaxial cabling: Synchronised frequency shift keyed (FSK) signalling.
Control over twisted pair cabling: 4-20 mA current loop.
Multiple camera control: Required.
Guard tour set up: Required.
Mounting: 19 inch rack.
System configuration: Password protection.

360 TELEMETRY RECEIVERS
Type: Submit proposals.
Control signal type: Submit proposals.
Inputs: Submit proposals.
Pre-set pan, tilt, zoom and focus positions: Submit proposals.
Movement control modes: Submit proposals.
Enclosure with integral power supply unit:
Material: Submit proposals.
Degree of ingress protection to BS EN 60529: IP65.
Colour: Submit proposals.

380 DIGITAL VIDEO RECORDERS
Manufacturer: Board's choice.
Product reference: System manufacturer.
Resolution:
Horizontal: 720 pixels.
Vertical: 576 pixels.
Storage media: Submit proposals.
Capacity: 31 recording days.

Inputs: Submit proposals.
Recording speed: 0.1-50 frames/s.
Event recording mode: Required.
Pre-event buffer: Submit proposals.
Camera inputs: Submit proposals.
Monitor outputs: Submit proposals.
IEEE 1394 connections:
Input: Submit proposals.
Output: Submit proposals.
Integral CD recorder: Required.
Video motion detection: Required.

390 MONITORSGENERALLY
Manufacturer: System manufacturer.
Product reference: System manufacturer.
Approval: BEAB.
Type: Liquid crystal display (LCD).
Size (nominal diagonal): 21 inch.
SVHS input: Submit proposals.
Audio input and output: Not required.
Mounting: Wall.

400 CAMERA BRACKETS general
Manufacturer: System manufacturer.
Product reference: System manufacturer.
Type: submit proposals.
Material: Submit proposals.
Finish: Submit proposals.
Camera mount adjustment: Single bolt release.
Pan: ±360°.
Tilt: ±70°.

410 CCTV SIGNAGE: To architects details
Manufacturer: System manufacturer.
Product reference: System manufacturer.
Format: Yellow background with black text and images.
Size: Submit proposals.
Content:
Warn individuals that they are entering premises or an area with CCTV surveillance.
CCTV camera symbol.
Describe the purpose of the CCTV system.
Identify the organisation responsible for operating the system.

420 EXTERNAL CAMERA HOUSINGSGENERALLY
Manufacturer: System manufacturer.
Product reference: System manufacturer.
Shape: Submit proposals.
Material: Submit proposals.
Finish: Board's choice.
Vandal resistant fasteners: Required.
Ingress protection to BS EN 60529: IP65.

Integral heater: Required.
Sun shield: Required.
Wiper and washer assembly: Required.

430 INTERNAL CAMERA HOUSINGSgeneral
Manufacturer: System manufacturer.
Product reference: System manufacturer.
Shape: Submit proposals.
Material: Submit proposals.
Finish: Board's choice.
Vandal resistant fasteners: Required.
Ingress protection to BS EN 60529: Submit proposals.

440 INFRARED ILLUMINATORS
Manufacturer: System manufacturer.
Product reference: System manufacturer.
Lamp type: Submit proposals.
Infrared wavelength: Submit proposals.
Effective infrared distance (minimum): Submit proposals.
Infrared cut off angle: Submit proposals.

450 TOWERS general
Manufacturer: System manufacturer.
Product reference: System manufacturer.
Type: Tubular section.
Height above ground level: Submit proposals.
Tilt over facility: Required.
Anti climb guards: Required.
Finish: Galvanized.

620 INSTALLING CLOSED CIRCUIT TELEVISION SYSTEMS
Standard: To BS EN 50132-7.
Site survey: Assess the site conditions and available artificial light.
Access: Locate system to provide safe access for maintenance and testing.
Camera connections: Conceal where practical, otherwise contain within PVC covered metal flexible conduit.
Mounting heights: Submit proposals.

630 INSTALLING CABLES
Route: Submit proposals.
Timing: Do not start internal cabling until building enclosure provides permanently dry conditions.
Cables: Install in one length.
Cable pulling: Submit proposals. Do not overstress. Prevent kinks and twisting of the cable.
Cables passing through walls: Sleeve with conduit or pipeduct. Bush at both ends.
Jointing: At equipment and terminal fittings only.

640 INSTALLING SIGNAGE
Location: Submit proposals.

910 CLOSED CIRCUIT TELEVISION SYSTEM TESTING AND COMMISSIONING
Standard: To BS EN 50132-7.
Evaluation of system performance: Rotakin test.
Commissioning video: Display image quality and camera coverage, using Rotakin test target.
Camera coverage: Adjust to obtain optimal performance.

920 DOCUMENTATION
Operation and maintenance instructions, record drawings & test/commissioning certificates to be compatible with Zutec system
Operation and maintenance instructions: Submit.
Record drawings: Submit.
Commissioning Certificate: Submit.
Test Certificate: Submit.

Specification Check / Revision Sheet

Project	**RHSC and DCN Edinburgh Hospitals**	Project Number	**G1547**
Service (s)	**Electrical**	Sheet	**WW AP.1.2.36 JB G1547**
Performance Specification Title	**Fire Detection and Alarms System & Gaseous Fire-Extinguishing System**	Date	**August 2014**
Prepared By	**JB**	Checked By	**BR**

Revision Ref.	Date of Revision	Page N$^{o(s).}$	Revision Details	Checked By
FT	December 2013	All	Final Tender	BR
FC	July 2014	All	Update for Financial Close	JB
FC	August 2014	All	Comments Incorporated	JB

RHSC and DCN EDINBURGH
FIRE DETECTION AND ALARMS SYSTEM & GASEOUS FIRE-EXTINGUISHING SYSTEM

CONTENTS

1.0	GENERAL INTRODUCTION
2.0	EXISTING SITE AND SERVICES
3.0	SCOPE
4.0	PERFORMANCE SPECIFIED SYSTEMS
5.0	SPECIFIC EXCLUSIONS
6.0	INTERFACES AND DEMARCATIONS
7.0	APPLICABLE STANDARDS
8.0	DESIGN CRITERIA
9.0	LIAISON
10.0	SYSTEMS
10.1	FIRE DETECTION AND ALARM SYSTEM

MATERIALS AND WORKMANSHIP CLAUSES

W50	Fire Detection and Alarm Systems
S70	Gaseous Fire-Extinguishing Systems

1.0 GENERAL INTRODUCTION

Purpose of Document

The manufacture, supply, installation, wiring, connecting, setting to work and commissioning of the works described in this document.

This specification relates to the Low Voltage Distribution system serving the RHSC-DCN Building and the associated Energy Centre.

This specification shall be read in conjunction with all other mechanical and electrical engineering services specifications and the Architectural drawings.

Description of Project

The new facility shall re-provide services from the Royal Hospital for Sick Children, Child and Adolescent Mental Health Service and the Department of Clinical Neurosciences in a single building adjoining the Royal Infirmary of Edinburgh at Little France.

The DCN part of the Facilities will have a physical link with the existing RIE Facilities specifically with the critical care unit.

The building is generally constructed from reinforced concrete.

The basement houses FM support facilities and the main building services heat distribution centres and electrical plant rooms.

Ventilation plantrooms are generally located at roof level and level 2.

A central energy centre to the South of the hospital houses heating, CHP, standby generation, fuel storage and utility incomers.

2.0 EXISTING SITE AND SERVICES

There will be a fire command centre in the control room.

During a fire incident control of ventilation and smoke will be from the command point and alternative repeater panels will be located at various positions around the building as shown on the fire alarm schematic.

The fire command centre shall provide command and control for the life safety systems including PC graphics for:

Fire Alarm Detection and annunciation;
Sprinklers (monitoring);
Ventilation system smoke dampers (monitoring and control at each fireman's entry/ main fire alarm panel location via BMS interface)
Fire fighting systems (monitoring and control);
Helipad systems (monitoring);
All other systems provided in accordance with the agreed fire strategy.

3.0 SCOPE

The scope of work covered by this Performance Specification shall include, but not be limited to the following:-

Fire detection and alarm system
Gaseous fire-extinguishing systems to the main core server room
Final run out conduits
Conduits in or on walls

4.0 PERFORMANCE SPECIFIED SYSTEMS

The Fire Detection and Alarm System is a performance specified system and this specification outlines the requirements to be met by the system.

5.0 SPECIFIC EXCLUSIONS

The following is specifically excluded from the scope of this element of the Performance Specification:-

Power wiring
Main cable containment (other than final run outs of conduits)
Sprinkler System

6.0 INTERFACES AND DEMARCATIONS

The fire detection and alarm system & gaseous fire-extinguishing system shall be integrated with a host Internet Protocol network. The fire detection and alarm system shall be connected to the host network via gateways. The System will be provided with a Graphical User Interface which will permit the interrogation of the fire detection and alarm system down to component level. It is not intended that the BMS will control the system but rather will monitor component status and provide fault alarm indication at the Graphical User Interface.

The system shall be integrated with the RIE as indicated on drawing WW-XX-XX-SC-572-001.

The new system shall be fully tested and bedded in prior to be connected through so that no false fire alarm signals are exchanged between the two facilities during system commissioning.

7.0 APPLICABLE STANDARDS

All elements of the works shall be designed in accordance with the requirements of current legislation, regulations and standards stated in the Materials & Workmanship clauses.

The fire detection and alarm system & gaseous fire-extinguishing system shall accord with all appropriate Scottish Hospital Technical Memoranda 81 and 82, HTM 05, Codes of Practice and relevant British & European Standards, the Scottish Non-Domestic Handbook, Fire, Annex 2b, Hospitals, 2006., BS 5839-1 and the agreed Fire Strategy.

8.0 DESIGN CRITERIA

Electricity Supply Characteristics

LV power characteristics: 400/230 V, 3-phase, 50 Hz, 230 V, 1-phase, 50 Hz.

Drawings

Project Co. shall prepare general arrangement drawings of the Fire Detection and Alarm System & Gaseous Fire-Extinguishing System.

9.0 LIAISON

Project Co. shall include for liaison with:-

Health and Safety Professionals. As well as the Health and Safety requirements of this specification, Project Co. shall include for close liaison with Health and Safety professionals including the Hospital's Health and Safety Advisors and the CDM Co-ordinator and shall comply with the CDM Regulations and all Health and Safety regulations.

Other Specialists Project Co. shall liaise with other specialists as necessary to ensure that all interfaces between the Fire Detection and Alarm System and other systems are allowed for. This shall include but not be limited to:-

NHS Lothian Fire Officer
City of Edinburgh Council
Scottish Fire & Rescue Service
Building Management System specialist
Lifts consultant
Security systems specialist
Sprinkler systems specialist
Smoke damper controls panel specialist
Pneumatic tube system specialist
Catering equipment specialist
Roof/Window specialists (with regards smoke relief)

Building Control. Project Co. shall liaise, with and adhere to, the requirements of the Building Control Officer.

Any other member of the and Board teams concerned with the planning and administration of fire precautions.

10.0 SYSTEMS

10.1 FIRE DETECTION AND ALARM SYSTEM

System Type

The Fire Detection and Alarm System shall be of the analogue addressable type providing category L1 coverage as defined by BS 5839:1:2013.

Cabling and Cable Containment

The Fire Detection and Alarm System wiring shall comply with the requirements of BS5839-1, SHTM 81 & 82 and Scottish Non-Domestic Handbook, Fire, Annex 2b, Hospitals, 2006.

Cables shall be the types as specified in BS5839 and be of red outer sheath and of the low smoke, zero halogen type (commonly referred to as LSF). All cables, including power cables and network cables, associated with the Fire Detection and Alarm System shall be of the enhanced type, meeting the PH120 classification when tested in accordance with BSEN 50200 and the 120 minute survival time when tested in accordance with BS 8434-2.

The main cabling routes shall be supported by wire basket cable trays. Runs of wiring comprising 1, 2 or 3 cables may be installed directly upon the soffit.

Methods of cable support shall be non combustible and shall withstand a similar temperature and duration to that of the cable whilst maintaining adequate support.

In areas of non demountable ceilings, such as in Theatre suites, wiring shall be run in conduit arranged in a ‘loop-in’ basis to allow wiring without access to the ceiling void.

Fire Alarm Zones

Project Co. shall determine fire alarm zone boundaries in accordance with the guidance in (S)HTM82 and BS5839. Reference shall be made to the fire strategy drawings for fire compartment boundaries.

In the event of fire The Works shall be capable of individual zone evacuation with all other zones receiving awareness signalling in accordance with the cause & effect matrix developed from the Fire Strategy.

Trigger Devices

The following trigger devices shall be provided:-

Multi sensor fire detectors shall be of the multi-criteria type operating via an algorithm to minimise unwanted fire signals as much as is practically possible
Manual call points (flush mounted in occupied spaces)
Heat detectors (temperature activation settings to be below that of sprinkler heads)
Smoke detectors in supply ductwork at all air handling units
Beam detectors
Canopy Extinguisant systems

Manual Call Points

Manual call points must be provided at every exit and staircase with no point in the building being more than 30m travel from a call device. (Any deviation for Clinical requirements shall be agreed with the Board).

Fire Alarm Evacuation facilities shall be provided at each main node, these shall require a double action e.g. break frangible lid and then activation of call point.

Ceiling Void Detection

The requirement for void detection will be risk assessed within each void in accordance with the Fire Strategy. The Fire Strategy provides an explanation for the methodology to be adopted for the risk assessment of the void content and an overview of the types of items considered to be acceptable.

The risk assessment, in matrix form, shall be agreed with the Board to identify where void detection is necessary.

Gaseous Extinguishing Systems

Gaseous Extinguishing Systems shall be provided in the following areas:

Main core server room

The room will be provided with gaseous extinguishing system which shall include a local control panel. The gaseous extinguishing system control panel shall be connected to smoke detectors within the server room and shall, in a preset sequence, shut down the room ventilation, close any air dampers, and ultimately trigger gas release.

The gaseous extinguishing system control panel shall be connected to the ‘house’ fire alarm system.

Refer to section S70 of this specification for Materials & Workmanship clauses pertinent to the gaseous extinguishing system.

Project Co. shall advise on any specific requirement relating to room construction, airtightness, pressure relief, gas extraction, interfaces with mechanical services/ power supplies/ fire alarm system.

Project Co. shall produce working drawings indicating locations of bottles, control panels, human interfaces, detection, pipework, nozzles, valves, power supplies, etc.

The design shall be co-ordinated with the cooling systems and IT equipment layouts.

The following matrix describes in general the actions required in the event of fire in the server room.

MAIN CORE SERVER ROOM FIRE DETECTION CAUSE AND EFFECT SCHEDULE

	'HOUSE' PANEL				COMPUTER ROOM						
	Flashing zone light	Text display	Zone sounders	Audible alert on panel	Shut down room ventilation	Close dampers	Trigger gas release	Flashing zone light	Text display	Sounders in server room	Audible alert on panel
Computer suite											
Gaseous Ext. Panel											
Smoke Detector 1	X	X	X	X	X			X	X	X	X
Smoke Detector 2	X	X	X	X	X	X	X	X	X	X	X

Omission of Detection

Detection need not be provided in:

Bathrooms
Shower rooms
Staff toilets
Cupboards of less than 1m²

Detection shall be provided in all other areas unless a risk assessment has been produced and agreed. .

Warning Devices

Fire alarm audibility levels shall be as required by HTM 05, SHTM82 and BS5839-1.

Audible alarm devices shall provide a constant tone when in "alarm" and be a light pulse & intermittent tone when in "alert".

Audible alarm devices shall generally be positioned to warn staff without undue disturbance to patients.

Noise sensitive areas exist within the Hospital within departments such as Theatres, Recovery, etc. the Board shall indicate which areas shall have a normal level of sound and which shall have a reduced level.

Voice evacuation announcements shall be provided in the atrium as required by the fire strategy with pre-programmed announcement text being agreed with the Board. These announcements shall be made via voice alarm sounders.

In areas where patients can escape unaided, and in non-patient areas, the audibility of the alarm shall be in accordance with BS 5839-1. Such areas would be:

Out patients
Public spaces
Main hospital streets

Fire alarm sounders shall be of the addressable type that are low power consumption and are wired directly upon the local fire alarm loop cable. Combined detector/sounder units are acceptable. All sounders must be provided with the facility to adjust sound levels.

Audio/Visual alarm devices shall be provided in:-

Plantrooms
UPS rooms
WCs in public areas
Noisy areas
Over each external door which gives access to fire alarm panels

In occupied spaces Audio/Visual alarm devices shall incorporate a sounder of 50dB(A) at 1m of similar sound to the main audible alarms.

Visual only alarms shall be provided in:

Operating theatres and post operative recovery
Intensive therapy units, critical care, and other similar high dependency units
Imaging rooms

The system shall be equipped with sufficient sounders to maintain sound outputs in different areas in accordance with SHTM 82, HTM 05, and incorporate visual strobe indicators for a fire condition in accordance with the requirements of the Disability Discrimination Act.

Control and Indicating Equipment

The Main Alarm Panel (MAP) shall be located in the Main Entrance. The MAP shall be wall mounted. The Fire Alarm PC Screen and HVAC screen shall be located in the Security Control room to provide the Fire Authorities with the facility to control the operation of the supply/exhaust air systems with assistance from FM personnel.

Local Fire Alarm Panels (FAP). FAPs shall be standalone local control and indication panels. On each floor, a local FAP shall be provided which shall enable each area to be separately and independently commissioned. The final quantity of local FAPs will depend upon the system supplier's technology. Every fire detection loop shall not be loaded to more than 80% of its capacity. The MAP shall be linked to all standalone local FAPs via a master bus network. Should this master bus network fail each local FAP shall be able to operate autonomously.

Graphic Repeat Panel (GRP). Adjacent to the MAP provide a GRP which shall clearly identify the location of a departmental area upon activation of a triggering device within that area.

Repeat Alarm Panels (RAP). RAPs shall identify the device and department in alarm via the LCD text display; the graphics shall assist the fire fighting team to clearly identify the location of the department in alarm. RAPs shall be located as indicated on the fire strategy drawings and in the Fire Control Room.

Framed coloured floor plans shall be provided at the MAP and RAP positions.

Local Repeat Indication Panels (LRIP) shall be provided at each staff base. LRIPs are to advise staff of where the location of the fire is so that they can plan their evacuation procedure whilst in the alert state. LRIPs shall have a minimum of a 40 character LCD display to identify to the nursing staff in the department in alarm and to evacuate as appropriate. These panels shall also have an audiovisual alarm unit so that upon activation of a fire signal the nursing staff will be immediately alerted.

The LRIPs at Staff Bases may be combined with local nurse call indicator panels (and Isolated Power Supply Unit annunciator panels where appropriate). Refer to the layout drawings for quantities and locations of Staff Bases.

Any other control panels which may be required due to the system proposed, shall be located in riser cupboards and/or plantrooms.

All fire alarm panels shall be capable of giving details of system status for fire, fault and alarm conditions including full text descriptions of location at all nodes and staff base positions. In addition, all panels shall be capable of data / event logging and report generation.

The control panels shall be fully networked with resilient connections to the site based PC front end with map facilities and remote graphics monitoring in Hillington via a dedicated link.

The control panels shall be sized to provide an additional 25% spare capacity for future growth within the Fire Detection & Alarm system.

Power Supply Units

A power supply unit shall be provided for each of the control panels. Each power supply unit shall be dedicated to the Fire Detection and Alarm System for the area it serves.

Power supply units shall be integral with batteries.

Power supply units shall be sized at 125% of its nominal use.

All batteries shall be, valve regulated lead acid (VRLA) with sufficient autonomy to drive the system (in quiescent mode) for 24 hours, followed by a 30-minute period where all alarm devices and communications are operated with the normal sound pressure level outputs. Batteries shall have a design life of 10 years.

Final connection of system to power supplies – schedule of responsibilities:-

Local means of electrical isolation (key operated fused connection unit) - by the Electrical Board installed outside the scope of this Performance Specification.
Power cable from local means of electrical isolation to power supply unit – by the Specialist Installer.
Termination of power cable at both ends- by the Specialist Installer.

Action following mains failure/generator test conditions

The fire alarm system specified herein to be self-rebooting following mains failure and generator test conditions.

Door Retaining Units

Door retaining units shall be of the electromagnetic type and shall operate as described in SHTM 82.

Doors shall be released upon fire alarm activation, their operation shall be as described in SHTM82. The system shall be fail safe door closed.

Door retaining units shall be configured to permit the doors to close at night.

Project Co. shall advise the Electrical Installer of local power supply requirements for door retaining units.

Door holder locations are indicated on the Architect's fire strategy drawings.

Smoke Damper Control

The details of the Smoke Damper control are to be finalised at a later stage.

Ancillary Devices

Interface units shall be provided to control/monitor security access control doors, mechanical plant, smoke damper control panels, sprinkler switches (including those in retail units), gaseous extinguishing systems, lift controllers, AGV controllers, atria smoke control, staircase smoke pressurisation/venting and basement smoke venting.

The extract hood in the kitchen will be fitted with 'fire trace' automatic extinguishing systems by the catering equipment specialist outside the scope of this contract.

The fire alarm system shall interface with the retail units' fire alarm panels.

An interface unit shall be installed at each BMS outstation.

Interface units shall be provided at each sprinkler flow detection valve to monitor valve position and flow.

Interface units shall be provided at each retail unit for sprinkler flow switches and pumps (monitoring).

Short circuit isolators shall be incorporated either within the base of each device or as standalone items. Should standalone devices be offered they shall be installed at intervals of no greater that 20 devices on a particular fire alarm loop and always between fire compartments.

Development and Management of Cause and Effect Schedule

The Cause and Effect Schedule shall encompass every fire alarm zone, every fire alarm control and indicating panel, interfaces with access control systems, door retaining units, gaseous extinguishing systems, paging system, audible and visual alarms, sprinklers, all mechanical services plant, smoke damper control panels, lift controllers etc.

The Cause and Effect Schedule shall form the basis of the demonstration and verification of correct system operation.

Progressive horizontal evacuation in patient areas is to be facilitated by each fire resisting sub-compartment being on a separate alarm zone, and by the use of two stage (evacuate/alert) alarms. Generally, upon detection of fire within a fire compartment it is anticipated that the following of events shall occur.

Fire Panel indicates an event.
Fire Alarm Control Panels and Repeat Panels indicate location of the fire event.
“fire” signal is sent to the Fire Command Centre.
Redcare connection to Alarm Receiving Centre (ARC)
“alarm” signal provided by audible and/or visual warning devices within the alarm zone.
“alert” signal provided by audible and/or visual warning devices within the adjacent sub-compartments (in horizontal plane).
“alert” signal provided by audible and/or visual warning devices within the adjacent sub-compartments immediately above and below (in vertical plane).
Recirculating ventilation systems serving areas in which the ‘alarm’ signal is given shall be set to discharge to the open air.

Ventilation plant serving the basement and atria shall shut down and be under the control of FM staff via the BMS interface adjacent to the main fire alarm panels and be under the direction of the fire brigade.
All other ventilation plant shall continue to operate and shall be under the control of FM staff via the BMS interface adjacent to the main fire alarm panels and be under the direction of the fire brigade.
Interface to extinguishing systems in kitchen extract hood.
Access controlled doors in “alarm” sub-compartment shall be automatically released to ‘free’ state.
Access controlled doors in adjacent sub-compartments shall be automatically released to ‘free’ state.
Doors detents in “alarm” sub-compartment shall be released.
Door detents in adjacent sub-compartments shall be released
Global release of all external final escape doors.
A signal shall be relayed to the local smoke damper control panel and the relevant dampers will be opened/closed as necessary.
Lifts serving the area in alarm shall receive an appropriate signal to operate as detailed within the Fire Strategy,
Interfaces with fixed gaseous extinguishing system.
Interfaces with fire shutters.
Interface is activated within retail units/ tenanted spaces.
The pneumatic tube transport system shall be shut down globally following the completion of any transaction in progress.

The sprinkler system operates in isolation of the Fire Detection & Alarm system and therefore does not form part of the cause & effect scenario.

Manual Operation of Sounders

A manual alert/evacuate control facility shall be provided for each alarm sounder zone. This shall be integrated within the main fire alarm control and indication panel. It shall provide the facility to manually activate any sounder zone in alert or evacuate mode, and to enable progressive evacuation of the Hospital under control of the Fire Brigade. The controls shall meet the requirements of SHTM 82.

Grace Times

The system shall be capable of accommodating the following strategy if required to reduce false alarms.

For any zone to cause an evacuation signal a double knock scenario must occur, i.e. two devices must detect fire within that zone. When the first device operates, a supervisory alert signal shall be sounded at the main fire panel. The signal must be acknowledged within a pre-defined period or the system shall go to fire mode. However, if the signal is acknowledged, a timer shall be initiated which shall allow inspection of the area, the duration of which is to be agreed with the Board and the local fire authority. Should a second device operate within the alerted area within this period, then the system shall go to fire and operate in accordance with the relevant matrix drawing.

However, in the event of the operation of any manual call point, a single knock scenario shall take place, which shall cause immediately an evacuation fire signal.

Should this strategy be adopted, this must be agreed with the Hospital and the local fire authority.

Testing & Commissioning

The complete system shall be fully tested and commissioned in accordance with BS5839.

A full audibility test shall be carried out in the presence of the Fire Officer and any other bodies who need to be present.

Following the testing and commissioning, Project Co. shall issue a Certificate of Installation and Commissioning which shall conform with BS5839-1.

Project Co. shall take into account the need for maintaining patient security during alarm testing i.e. the testing regime shall not allow for ordinarily secure doors to open as a result of routine testing.

Demonstration

Following testing and commissioning, Project Co. shall demonstrate the completed system.

Documentation

Project Co. shall provide necessary documentation to confirm that the system will have a documented history of compatibility by design for a minimum of 15 years. Future compatibility shall be supported for no less than 10 years. Compatibility shall be defined as the ability to upgrade existing systems to current level of technology, and extend new field panels on a previously installed network.

Project Co. shall provide prior to completion a Log Book which shall conform with BS5839-1.

Software

Project Co. shall provide 2 N° copies of the software used on this project, following issue of the Certificate of Installation and Commissioning. Open protocol industry standard software must be used. All software shall be 'backwards compatible'.

Requirements Specific to the Energy Centre

The energy centre will house:-

Dual fuel (oil and gas) boilers. MV switchgear, diesel fuelled standby generator plant, CHP plant, fuel storage and associated pumps.

The fire alarm system shall include interfaces with gas shut off valves, interfaces with fusible links in boiler rooms, CHP room and generator rooms, interfaces with BMS.

In rooms where fuel is stored, pumped and utilised, the selected fire alarm equipment shall be suitable for the hazardous environment.

Audio/Visual alarms shall be provided throughout the energy centre selected to take account of the background noise.

W50 Fire detection and alarm systems

110 FIRE DETECTION AND ALARM SYSTEM
System manufacturer: Submit proposals.
Manufacturer approval: LPCB LPS 1014 certified.
Type: Automatic analogue addressable.
Category to BS 5839-1: L1.
Variations: None.
Detection devices:
Atmosphere: Normal.
Types:
Manual call points;
Optical beam smoke detectors ;
Point heat detectors ;
Point smoke detectors ; and
Submit design proposals.
Equipment interconnectivity: Enhanced fire resisting cabling.
Cable containment: Cable basket, as section Y63.
Rewireable installation: Required.
Concealed installation: Required.
Internal alarms:
Primary: Sounders.
Secondary: Visual alarm signal devices.
External alarms: Refer to Particular specification 'Existing site and services'.
Controls: Main control and indicating equipment.
Accessories:
Automatic door release mechanisms ;
Actuation of fire protection systems ;
Mimic panels ;
Remote indicators ;
Short circuit isolators ; and
Zone diagrams.

130 ASPIRATING DETECTION SYSTEMS refer to Particular specification.
System manufacturer: Submit proposals.
System type: Secondary sampling.
Equipment interconnectivity: Enhanced fire resisting cabling.
Cable containment: Cable basket, as section Y63.
Rewireable installation: Required.
Concealed installation: Required.

210A DESIGN OF FIRE DETECTION AND ALARM SYSTEMS
System designer: Board.
Design: Complete the design of the fire detection and alarm system in accordance with BS 5839-1, SHTM81 and 82, Scottish Non Domestic handbook, Fire, Annex 2b, Hospitals.
Proposals: Submit drawings, technical information, calculations and manufacturers' literature.
System design certificate: Submit with design proposals.
Design drawings to be co ordinated with architect's reflected ceiling grid
Submit cable containment and power supply requirements
Submit Cause and Effect matrix

215 DESIGN OF ASPIRATING DETECTION SYSTEMS

System designer: Board.

Design: Complete the design of the aspirating detection system in accordance with BFPSA Code of practice for category 1 aspirating detection systems.

Proposals: Submit drawings, technical information, calculations and manufacturers 'literature.

System design certificate: Submit with design proposals.

220 PERFORMANCE OF FIRE DETECTION AND ALARM SYSTEMS

Areas to be protected: Refer to the particular section of this specification for details of where protection may be omitted.

System objectives: To provide type L1 protection. To warn staff without undue disturbance to patients.

Spare system capacity: 10% loop loading.

Number of devices per zone (maximum): Board's choice.

225 PERFORMANCE OF ASPIRATING DETECTION SYSTEMS

Areas to be protected: Refer to Particular Specification.

System objectives:

In server rooms: To provide pre fire warning, interfaced with house fire alarm system, as described in the particular section of this specification. System will be used in area with high air flow.

In theatres and MRI - in lieu of ceiling mounted detectors.

Maximum transport time: 120s.

Sampling: Continuous.

System sensitivity: Very high.

250 DETECTION ZONES

Zoning: Submit proposals. Follow guidance given in BS5839-1 and SHTM 81 and SHTM 82. Refer to Architect's Fire Strategy Plans for compartments and sub compartments.

255 ALARM ZONES

Alarm zoning: Submit proposals.

Mode of operation: To warn staff without undue disturbance to patients. To facilitate progressive horizontal evacuation in accordance with SHTM 82. Refer to Particular section of this Specification.

All zone evacuate control: Not required.

260 ACTUATION OF FIRE PROTECTION SYSTEMS

Standard: To BS 7273-1.

Objectives: gaseous extinguishing systems in 2 no. server rooms to be actuated as described in the Particular section of this specification and clause S70.

265 INTEGRATION WITH OTHER ALARM AND SECURITY SYSTEMS

Objectives: Refer to particular.

Systems to be integrated: Refer to Particular.

266 INTERFACES TO EQUIPMENT

Interfaces to equipment not forming part of the fire detection and alarm system: Design system to interact with the equipment in the event of a fire or fault signal.

Equipment and mode of operation: Refer to Particular.

270 INTERFACE ISOLATION FOR TESTING PURPOSES
Isolation of systems and equipment: Design system so that the actuation, integration and interfacing can be isolated during fire alarm testing.
Means of isolation: Via CIE.

285 EXTERNAL ALARM SIGNALLING
Objective: External alarms required at each fire exit. External sounders to be silenced after 30minutes.

310 DETECTION DEVICES
Device address setup: Automatic via CIE.
Removal of devices: Must require a special tool. Must not affect the operation of alarm equipment.
Device bases: Maintain circuit continuity when device is removed.

320 PRODUCTS FOR USE IN EXPLOSIVE GAS OR VAPOUR ATMOSPHERES
Standard: To BS EN 60079-14.

330 PRODUCTS FOR USE IN EXPLOSIVE DUST ATMOSPHERES
Standards: To BS EN 61241-14 and BS EN 61241-17.

370 MANUAL CALL POINTS
Standard: To BS EN 54-11.
Manufacturer: Board's choice.
Product reference: Submit proposals.
Operation: Type A.
Frangible element: Non-resettable.
Integral red visual indicator: Required.
Environmental category: Indoors.
Mounting: Fully recessed.
Time delay between activation of manual call point and the alarm signal (maximum): 3 s.
Protective covers: Not required.

380 OPTICAL BEAM SMOKE DETECTORS
Standard: To BS EN 54-12.
Manufacturer: Board's choice.
Product reference: Submit proposals.
Thermal turbulence detection: Required.
Contamination compensation: Required.
Power supply: Internal.

400 POINT HEAT DETECTORS
Standard: To BS EN 54-5.
Manufacturer: Board's choice.
Product reference: Submit proposals.
Classification: A1.
Suffix: S.
Type: Point.
Temperature activation settings to be below that of sprinkler heads.

410 POINT SMOKE DETECTORS
Standard: To BS EN 54-7.
Manufacturer: Board's choice.
Product reference: Submit proposals.
Detection method: Multi criteria type.

420A ENHANCED FIRE RESISTING CABLING
All fire alarm system wiring, including loop wiring, power supplies and network cabling shall be of the enhanced type.
Type: In accordance with BS 5839-1.
Sheath and accessory colour: Red.
Refer to V32 clauses 420 & 420A to 420L.

430A STANDARD FIRE RESISTING CABLING
NOT TO BE USED

435 SOUNDERS
Standard: To BS EN 54-3.
Manufacturer: Board's choice.
Product reference: Submit proposals.
Type: Electronic sounder.
Sounder cut off time (maximum): 30 minutes.
Ingress protection standard: Type A.
Colour: Red.
Directional output at 1 m (minimum): Adjustable so as to alert staff only in patient areas.
Elsewhere to achieve noise level required by BS5839-1.
Integral beacon: Not required.
Mounting: Semi-recessed.
Power supply: From loop.

445 VIBRATING RADIO PAGERS
Manufacturer: Submit proposals.
Product reference: Submit proposals.
Number to be supplied: 50.
Type of licence: Manual frequency co-ordinated licence.
Response time following alarm condition (maximum): 5 s.
Response to fire alarm condition:
Unique vibrating and audible output on alarm condition.
Duration: Continuous for 60 s or until acknowledged at the vibrating radio pager.
Priority over all other signals.
Response to loss of transmission: Identified at the pager within 5 m by a visual and tactile signal.
Power source: Battery.
Low battery warning: Indicated by visual and tactile signal.
Display:
80 character (minimum) LCD.
Backlight: Required.
Password protection: Required.

447 TRANSMITTERS FOR VIBRATING RADIO PAGERS
Manufacturer: As vibrating radio pager.
Product reference: Submit proposals.
Type of licence: As vibrating radio pager.
Power supply: Integral.
Standard: To BS EN 54-4.
Standby source: Rechargeable battery.
Indications:
Output fault signal;
Total loss of power supply; and
Battery supply failure.
Alarm outputs: Output to vibrating radio pagers and Output to fault warning equipment.

450A AUDIBLE / VISUAL ALARM SIGNAL DEVICES:
For use in plantrooms, service yards etc as detailed in Particular section of this specification
Manufacturer: Board's choice.
Product reference: Submit proposals.
Type: Xenon beacon, also to incorporate sounder to achieve sound levels required by BS5839-1.
Flash rate per minute:
Minimum: 30.
Maximum: 130.
Lens:
Material: Polycarbonate.
Colour: Red.
Enclosure ingress protection to BS EN 60529: IP44.

450B VISUAL ALARM SIGNAL DEVICES
For use in Operating theatres, ITU, audiology, Imaging and other areas of high dependency as detailed in the particular section of this specification
Manufacturer: Board's choice.
Product reference: Submit proposals.
Type: Xenon beacon.
Flash rate per minute:
Minimum: 30.
Maximum: 130.
Lens:
Material: Polycarbonate.
Colour: Red.
Enclosure ingress protection to BS EN 60529: IP44.

455 FULLY FUNCTIONAL REPEAT PANELS
Standard: To BS EN 54-2.
Features: Match CIE.

460 MAIN CONTROL AND INDICATING EQUIPMENT (CIE)
Standard: To BS EN 54-2.
Main display: 32 character alphanumeric colour display.

Zone indication to BS 5839-1: Individual LED status indicators.
Installed capacity: Board's choice.
Monitored sounder circuits (minimum): Board's choice.
Printer: Output to separate printer.
Indications:
Fault signals from points;
Total loss of power supply; and
Alarm counter.
Controls:
Coincidence detection;
Delays to the activation of outputs;
Disablement of addressable points; and
Test condition facilities.
Outputs:
Output to fire alarm devices;
Output to fire alarm routing equipment;
Output to fire protection equipment;
Output to fault warning equipment; and
Standardized input and output interface.
Input device: Alphanumeric keypad.
Enclosure: System manufacturer's standard.
Ingress protection to BS EN 60529: System manufacturer's standard.
Finish: Submit proposals
Mounting: Recessed.

465 POWER SUPPLY EQUIPMENT
Standard: To BS EN 54-4.
Standby source: Rechargeable battery (VRLA with 10 year life).
Time after which sufficient capacity remains to power the fire alarms for at least 30 minutes: 24 h. Note that although the system will be supported by standby generator it will not be permitted to reduce this duration accordingly.
Housing: Within the CIE.
Monitoring of power supplies: By the CIE.

470 AUTOMATIC DOOR RELEASE MECHANISMS
Standard: To BS 5839-3.
Manufacturer: Submit proposals.
Product reference: Submit proposals.
Control type: Electromagnetic.
Mounting type: wall mounted but at sufficient height to prevent damage by trolleys.
Operation: Automatic via CIE.
Power: Derived from sounder circuit.
Integral manual release button: Required.

475A MIMIC PANELS
Standard: To BS EN 54-2.
Manufacturer: System manufacturer.
Product reference: Submit proposals.
Type: Submit proposals.
Material: Submit proposals.
Enclosure ingress protection to BS EN 60529: IP44.
Mounting: Recessed.

480 REMOTE INDICATORS
Lamp: High intensity LED.
Colour: Red.
Lens:
Material: Polycarbonate.
Colour: Clear.
Enclosure ingress protection rating to BS EN 60529: IP 44.

550 SHORT CIRCUIT ISOLATORS
Manufacturer: Board's choice.
Product reference: Submit proposals.
Power supply: Loop powered.
Integral LED status indicator: Required.

565 ASPIRATING SMOKE DETECTION EQUIPMENT
Equipment: In accordance with section 11 of FIA Code of Practice for Design, Installation, Commissioning & Maintenance of Aspirating Smoke Detector (ASD) Systems.
Manufacturer: Submit proposals.
Product reference: Submit proposals.
Pipework: Submit proposals.
Size: Submit proposals.
Sampling points: Submit proposals.

650 INSTALLING MAIN CONTROL AND INDICATING EQUIPMENT (CIE)
Location: Submit proposals.
Power supply: Derive from a dedicated circuit from the main switchboard and connect to CIE via unswitched fused connection units.

660 INSTALLING CABLING
Standard: To BS 7671.
Cable route: Segregate from other cabling. Where installed in trunking, locate in a dedicated fire cabling compartment.
Type: Loop or radial circuits without spurs pr tees
Mechanical protection: in areas where physical damage or rodent attack could occur.
Fastening cables:
To building fabric: Metal P-clips with red plastic coating.
To cable supports: Metal bands with red plastic coating.
Cables passing through the building fabric: Sleeve.
Jointing: At equipment terminals.
Cable terminals: Use ceramic terminal blocks.
Maximum circuit resistance: Measure before concealment. Submit results.

670 INSTALLING POINT DETECTORS
Protective cage: Not required.

680 INSTALLING MANUAL CALL POINTS
Location: Prominent position.
Mounting height generally (above finished floor level): 1.2 m.
Test key: Locate to allow easy test operation.

Labelling: Identify the manual call point address.
Type: Face engraved rigid plastic laminate.
Background: White.
Lettering: Red.

700 INSTALLING SOUNDERS
Circuit wiring: Distribute and interleave multiple sounder circuits around the building.
Protective cage: Not required.

705 INSTALLING VISUAL ALARM SIGNAL DEVICES
Location: Submit proposals
Mounting height generally (above finished floor level): 2.1 m.
Protective cage: Not required.

710 INSTALLING SHORT CIRCUIT ISOLATORS
Location: Submit proposals.
Labelling: Identify the associated zones.

720 INSTALLING END OF LINE DEVICES
Location: Submit proposals.
Labelling: Identify the presence of an end of line device, and describe its function.

725A INSTALLING REMOTE INDICATORS
Concealed detection devices: Install individual LED indicators.
The provision of an individual indicator will generally not be necessary provided that the location of the detection device is clearly indicated at the CIE, exceptions: lift shafts, mechanical and electrical risers, electrical cupboards, electrical switchrooms and transformer rooms, lift motor rooms.

730 INSTALLING TRANSMITTERS FOR VIBRATING RADIO PAGERS
Location: Submit proposals.
Connection to equipment: Install interconnecting wiring between transmitter and: Submit proposals.
Power supply: Derive from a dedicated circuit from the main switchboard and connect via unswitched fused connection units.

740 INSTALLING INTERFACES TO OTHER EQUIPMENT AND SYSTEMS
Connection to equipment: Install interconnecting wiring between interface unit and equipment controlled.
Interface units: Label, describing their function.

750 INSTALLING ALL ZONE EVACUATION CONTROLS
Location: Integral within CIE.

760 INSTALLING ASPIRATING SMOKE DETECTION SYSTEMS
Pipework:
Joints: Solvent welded.
Bends: Long radius.
Labelling: Along the pipework and at each sampling point.
Connection to sampling point: Rigid extended sampling pipe.

910 TESTING AND COMMISSIONING GENERALLY
Commissioning: In accordance with BS 5839-1.
System commissioning agent: Board.
System verification agent: Board.
Notice before commencing tests (minimum): 2 weeks.

911 SYSTEM INFORMATION
Device list: Before commissioning submit proposals, including proposed device and zone names.
Zone diagram: Before commissioning submit proposals.

915 TESTING AND COMMISSIONING OF ASPIRATING SMOKE DETECTION SYSTEMS
Standard: In accordance with FIA Code of Practice for Design, Installation, Commissioning & Maintenance of Aspirating Smoke Detector (ASD) Systems.

920 DEVICE IDENTIFICATION AND TESTING
Device identification: Label devices with a unique address corresponding to that used by the CIE.
Device testing: Verify the operation of each device. Submit a schedule of devices, including the device test methods and results.

925 CABLE TESTING
Insulation resistance: Submit results.
Earth continuity: Submit results.

930 SYSTEM SOAK TESTING
Soak test: Undertake when construction works are complete, but before handover.
Period: 14 days per construction zone.
Re-test after remedial works.

935 STANDBY BATTERY TESTING
Mains power supply: Isolate.
Quiescent mode: Measure current supplied by standby source when fire detection and alarm system is operating in the quiescent mode. Submit results.
Alarm mode: Measure current supplied by standby source when fire detection and alarm system is operating in the alarm mode. Submit results.

940 TESTING ACTUATION, INTEGRATION AND INTERFACING WITH ALARM AND SECURITY SYSTEMS
Connections with other systems and equipment: Verify and demonstrate operation of the systems and equipment under fire and fault conditions.

945 MEASUREMENT OF SOUND PRESSURE LEVELS
Sound pressure levels: Measure throughout the building.
Test instrument:
Standard: To BS EN 61672-1.
Setting: Slow response, weighting A.

Doors: Close before measuring sound pressure levels.
Results: Submit.
Format: Electronic layout drawing showing location of measurements with results

960 CERTIFICATION
Format: In accordance with BS 5839-1 Annex G.
Number of copies: Match operation and maintenance manuals.
Design certificate: Submit.
Installation certificate: Submit.
Commissioning certificate: Submit.
Verification certificate: Submit.
Test certificate: Submit.
Fire Alarm Sound Record Sheets: Submit.

965 DOCUMENTATION
Operation and maintenance instructions, record drawings & test/commissioning certificates to be compatible with Zutec system.
Operation and maintenance manual: Submit.
Record drawings: Submit.
Fire evacuation plan: Submit.
Format: Electronic colour CAD layout.

970 LOG BOOKS
Format: To BS 5839-1 Annex F.
Number of copies: 1.

980 ACCEPTANCE CERTIFICATE
Acceptance certificate: Prepare and submit.

990 SPARES AND CONSUMABLES
Supply the following spares:
Frangible elements for manual call points: 10.
Detectors: 2 of each type
Printer ink and paper roll: Replace immediately before handover.

S70 Gaseous fire-extinguishing systems

GENERAL

120 HALOCARBON GAS TOTAL FLOODING FIRE-EXTINGUISHING SYSTEM
System manufacturer: Submit proposals.
Extinguishant type: Submit proposals.
Source: High pressure storage cylinders.
Pipelines: Submit design and cost proposals.
Pipeline ancillaries:
Container valve assemblies and their actuators;
Check valves and non-return valves; and
Submit design and cost proposals.
Outlets: Nozzles.
Operation: Electrical actuation.
Controls:
Control panel;
Electrical automatic control and delay devices;
Non-electrical automatic control and delay devices;
Manual triggering and stop devices;
Pneumatic alarm devices; and
Submit design and cost proposals.
Accessories: Submit design and cost proposals.
Completion:
Plant and equipment identification: Submit design and cost proposals.

SYSTEM PERFORMANCE

210 DESIGN
Design: Complete the design of the gaseous fire-extinguishing system.
Proposals: Submit drawings, technical information, calculations and manufacturers' literature.

230 HALOCARBON GAS FIRE-EXTINGUISHING SYSTEM
Standards:
CEA 410 (FC-3-1-10) extinguishant: To BS ISO 14520-4.
FE-13 (HFC 23) extinguishant: To BS EN 15004-6.
FE-36 (HFC 236fa) extinguishant: To BS ISO 14520-11.
FM-200 (HFC 227) extinguishant: To BS EN 15004-5.

PRODUCTS

310 HIGH PRESSURE STORAGE CYLINDERSFOR HALOCARBON GAS TOTAL FLOODING FIRE-EXTINGUISHING SYSTEM
Standards: To BS EN ISO 9809-1 and BS EN ISO 9809-3.
Type: submit proposals.
Manufacturer: System manufacturer.
Product reference: Submit proposals.
Number: Submit proposals.
Capacity: Submit proposals.

325 CONTAINER VALVE ASSEMBLIES AND THEIR ACTUATORS
Standard: To BS EN 12094-4.
Manufacturer: Submit proposals.
Product reference: Submit proposals.

326 HIGH AND LOW PRESSURE SELECTOR VALVES AND THEIR ACTUATORS
Standard: To BS EN 12094-5.
Manufacturer: Submit proposals.
Product reference: Submit proposals.

328 CHECK VALVES AND NON-RETURN VALVES
Standard: To BS EN 12094-13.
Manufacturer: Submit proposals.
Product reference: Submit proposals.

340A NOZZLES FOR HALOCARBON GAS FIRE-EXTINGUISHING SYSTEMS Server rooms x 2
Type: Overhead.
Manufacturer: Submit proposals.
Product reference: Submit proposals.

350 ELECTRICAL ACTUATIONFOR HALOCARBON GAS TOTAL FLOODING FIRE-EXTINGUISHING SYSTEM
Actuator: In accordance with BS 7273-1.
Type: Point smoke detector.
Manufacturer: Submit proposals.
Product reference: Submit proposals.

360 MECHANICAL ACTUATIONFOR HALOCARBON GAS TOTAL FLOODING FIRE-EXTINGUISHING SYSTEM
Actuator: In accordance with BS 7273-2.
Type: Manual release.
Manufacturer: Submit proposals.
Product reference: Submit proposals.

370 CONTROL PANELSFOR HALOCARBON GAS TOTAL FLOODING FIRE-EXTINGUISHING SYSTEM
Type: Submit proposals.
Manufacturer: Submit proposals.
Product reference: Submit proposals.
Components on panel fascia:
Alarm silence lamp;
Buzzer silence;
Fire-extinguishing system automatic mode - lamp;
Fire-extinguishing system manual mode - lamp;
Hold gas release - switch and lamp;
Isolate gas release circuit - switch and lamp;
Isolate remote signal - switch and lamp;
Key operated security switch;
Lamp test switch;
Manual/ automatic mode - push switch;
Manual release unit ;
Power on lamp;

Silence alarm switch;
System general fault - lamp and buzzer;
Test evacuate alarm switch; and
Submit proposals.

380 ELECTRICAL AUTOMATIC CONTROL AND DELAY DEVICES
Standard: To BS EN 12094-1.
Controls:
Abort switch ;
Automatic and manual/ manual only switch;
Discharge prevention device;
Hold switch ;
Manual release switch;
Time delay facility; and
Submit proposals.

390 NON-ELECTRICAL AUTOMATIC CONTROL AND DELAY DEVICES
Standard: To BS EN 12094-2.
Controls:
Abort switch ;
Automatic and manual/ manual only switch;
Discharge prevention device;
Hold switch ;
Manual release switch;
Time delay facility; and
Submit proposals.

400 MANUAL TRIGGERING AND STOP DEVICES
Standard: To BS EN 12094-3.
Manufacturer: Submit proposals.
Product reference: Submit proposals.

410 NON-ELECTRICAL DISABLE DEVICES
Standard: To BS EN 12094-6.
Manufacturer: Submit proposals.
Product reference: Submit proposals.

420 PNEUMATIC ALARM DEVICES
Standard: To BS EN 12094-12.
Manufacturer: Submit proposals.
Product reference: Submit proposals.

450 PRESSURE GAUGES AND PRESSURE SWITCHES
Standard: To BS EN 12094-10.
Manufacturer: Submit proposals.
Product reference: Submit proposals.

460 ODORIZING DEVICES
Standard: To BS EN 12094-16.
Manufacturer: Submit proposals.
Product reference: Submit proposals.

EXECUTION

620 INSTALLING STORAGE CYLINDERS
Location: Close to the hazards they protect.
Protection for severe climatic or mechanical exposure: Provide guards or enclosures.
Sunlight: Protect from direct sunlight.

630 INSTALLING NOZZLES
Location: Free of obstructions, air currents and draughts.
Position: Install perpendicular to the hazard centred over the area protected by the nozzle, or between 45° and 90° from the plane of the hazard surface.

640 INSTALLING CONTROL PANELS
Location: Exit to the protected space.
Mounting: Semi-recessed with collar.

COMPLETION

910 TESTING
Notice (minimum): 3 days.
Static pressure test:
Open ended pipelines: Pneumatically test in a closed circuit for 10 minutes at 3 bar (300 kPa). The pressure drop must not exceed 20% of the test pressure.
Closed sections of pipelines: Hydrostatically test to 190 bar (19000 kPa) for high pressure systems and 36 bar (3600 kPa) for low pressure systems, for a period of 2 minutes. After this period check that there is no leakage.
Purging: On completion of testing, purge the systems. Remove moisture.

920 SETTING TO WORK
Operation: Using nitrogen, or a suitable alternative, test that flow through pipelines and nozzles is unobstructed.
Thermal links: Check that control cable lines are free.
Pneumatic heat actuation: Test using manometer. Capillary lines must be leak free.

930 DOCUMENTATION
Operation and maintenance instructions: Submit.
Record drawings: Submit.

940 OPERATING TOOLS
Tools: Supply tools for operation and maintenance purposes.
Quantity: 2 sets.

ROYAL HOSPITAL FOR CHILDREN, EDINBURGH
THEATRE AIR CHANGE RATES & ROOM PRESSURE VERIFICATION

Area:	Theatre Suite	**AHU:**	Various
Client:	Mercury Engineering	**Client Contact:**	Ryan Waddell
Hospital:	Royal Hospital for Children, Edinburgh	**Report No:**	A12250
Site Address:	Little France Crescent, Edinburgh	**Theatre Condition:**	Good
Date of Test:	1st - 5th July 2019	**Date of Last Test:**	n/a
Test Engineer & Report Preparation:	Ian Stewart	**Signature:**	[redacted]
H&V Approval:		**Signature:**	
Client Reviewed by:		**Signature:**	

H&V COMMISSIONING SERVICES LTD
KILKNOWE OFFICE
16 BARRMILL ROAD
GALSTON
AYRSHIRE
KA4 8HH

ROYAL HOSPITAL FOR CHILDREN EDINBURGH

INDEX

1. Theatre 30
2. Theatre 31
3. Theatre 32
4. Theatre 33
5. Theatre 34
6. Theatre 35
7. Theatre 36
8. Theatre 37
9. Theatre 38
10. Theatre 39

ROYAL HOSPITAL FOR CHILDREN EDINBURGH

Section 1 – Theatre 30

Conventional Theatre only.

Air Change Rates

Room Reference	Design Volume m³/hr	Recorded Air Volume m³/hr	Design %	Room Volume m³	Recorded ac/hr	SHTM 03-01 Air Change Rates ac/hr
Theatre	4,320	5,130	119	191.62	26.77	25
Anaesthetic	810	882	109	50.57	17.44	15
Prep (lay-up)	324	378	117	33.08	11.43	>10
Disposal	756	810	107	37.60	43.56*	>20

Comments:
The theatre room volume includes the Scrub Up (28.82m³).
***The disposal room is shared with theatre 31 and the air change rates includes the grille related that that system which is extracting 828m³/hr.**

Room Pressures

Room Reference	SHTM Room Pressure (Pa)	Recorded Room Pressures (Pa)
Theatre	+25	+31
Anaesthetic	>10	+13
Prep	+25	+31
Disposal	-5	-8

ROYAL HOSPITAL FOR CHILDREN EDINBURGH

Section 2 – Theatre 31

UCV & Conventional Theatre.

UCV Air Change Rates

Room Reference	Design Volume m³/hr	Recorded Air Volume m³/hr	Design %	Room Volume m³	Recorded ac/hr	SHTM 03-01 Air Change Rates ac/hr
Theatre	4,147	5,512	133	192.05	28.70	25
Anaesthetic	810	896	111	51.50	17.40	15
Prep (lay-up)	324	378	105	32.54	11.62	>10
Disposal	756	828	109	37.60	43.56*	>20

Comments:
The theatre room volume includes the Scrub Up (29.71m³).
***The disposal room is shared with theatre 30 and the air change rates includes the grille related that that system which is extracting 810m³/hr**

Conventional Air Change Rates

Room Reference	Design Volume m³/hr	Recorded Air Volume m³/hr	Design %	Room Volume m³	Recorded ac/hr	SHTM 03-01 Air Change Rates ac/hr
Theatre	4,147	5,368	129	192.05	27.95	25
Anaesthetic	810	954	118	51.50	18.52	15
Prep (lay-up)	324	392	121	32.54	12.05	>10
Disposal	756	778	103	37.60	42.23*	>20

Comments:
The theatre room volume includes the Scrub Up (29.71m³).
***The disposal room is shared with theatre 30 and the air change rates includes the grille related that that system which is extracting 810m³/hr**

Room Pressures

Room Reference	SHTM Room Pressure (Pa)	Recorded Room Pressures (Pa) UCV Mode	Recorded Room Pressures (Pa) Conventional Mode
Theatre	+25	+33	+26
Anaesthetic	>10	+13	+13
Prep	+25	+33	+26
Disposal	-5	-8	-5

ROYAL HOSPITAL FOR CHILDREN EDINBURGH

Section 3 – Theatre 32

UCV & Conventional Theatre.

UCV Air Change Rates

Room Reference	Design Volume m³/hr	Recorded Air Volume m³/hr	Design %	Room Volume m³	Recorded ac/hr	SHTM 03-01 Air Change Rates ac/hr
Theatre	4,147	5,472	132	195.80	27.95	25
Anaesthetic	810	817	101	51.09	15.99	15
Prep (lay-up)	324	371	114	34.33	10.81	>10
Disposal	756	799	106	37.30	43.56*	>20

Comments:
The theatre room volume includes the Scrub Up (30.28m³).
***The disposal room is shared with theatre 33 and the air change rates includes the grille related that that system which is extracting 828m³/hr**

Conventional Air Change Rates

Room Reference	Design Volume m³/hr	Recorded Air Volume m³/hr	Design %	Room Volume m³	Recorded ac/hr	SHTM 03-01 Air Change Rates ac/hr
Theatre	4,147	5,515	133	195.80	28.17	25
Anaesthetic	810	911	112	51.09	17.83	15
Prep (lay-up)	324	450	139	34.33	13.11	>10
Disposal	756	824	109	37.30	42.23*	>20

Comments:
The theatre room volume includes the Scrub Up (30.28m³).
***The disposal room is shared with theatre 33 and the air change rates includes the grille related that that system which is extracting 828m³/hr**

Room Pressures

Room Reference	SHTM Room Pressure (Pa)	Recorded Room Pressures (Pa) UCV Mode	Recorded Room Pressures (Pa) Conventional Mode
Theatre	+25	+43	+37
Anaesthetic	>10	+14	+15
Prep	+25	+43	+37
Disposal	-5	-8	-6

ROYAL HOSPITAL FOR CHILDREN EDINBURGH

Section 4 – Theatre 33

UCV & Conventional Theatre.

UCV Air Change Rates

Room Reference	Design Volume m³/hr	Recorded Air Volume m³/hr	Design %	Room Volume m³	Recorded ac/hr	SHTM 03-01 Air Change Rates ac/hr
Theatre	4,320	4,954	115	191.53	25.86	25
Anaesthetic	810	828	102	49.98	16.57	15
Prep (lay-up)	324	378	117	36.25	10.43	>10
Disposal	756	828	110	37.30	43.62*	>20

Comments:
The theatre room volume includes the Scrub Up (26.67m³).
***The disposal room is shared with theatre 32 and the air change rates includes the grille related that that system which is extracting 799m³/hr.**

Conventional Air Change Rates

Room Reference	Design Volume m³/hr	Recorded Air Volume m³/hr	Design %	Room Volume m³	Recorded ac/hr	SHTM 03-01 Air Change Rates ac/hr
Theatre	4,320	4,968	115	191.53	25.94	25
Anaesthetic	810	1,044	129	49.98	20.89	15
Prep (lay-up)	324	468	144	36.25	12.91	>10
Disposal	756	828	110	37.30	44.29*	>20

Comments:
The theatre room volume includes the Scrub Up (26.67m³).
***The disposal room is shared with theatre 32 and the air change rates includes the grille related that that system which is extracting 824m³/hr.**

Room Pressures

Room Reference	SHTM Room Pressure (Pa)	Recorded Room Pressures (Pa) UCV Mode	Recorded Room Pressures (Pa) Conventional Mode
Theatre	+25	+35	+31
Anaesthetic	>10	+16	+16
Prep	+25	+34	+28
Disposal	-5	-7	-6

ROYAL HOSPITAL FOR CHILDREN EDINBURGH

Section 5 – Theatre 34

Conventional Theatre only.

Air Change Rates

Room Reference	Design Volume m³/hr	Recorded Air Volume m³/hr	Design %	Room Volume m³	Recorded ac/hr	SHTM 03-01 Air Change Rates ac/hr
Theatre	4,320	4,561	106	149.00	30.61	25
Anaesthetic	810	893	110	50.50	17.68	15
Prep (lay-up)	324	392	121	33.20	11.81	>10
Disposal	756	911	120	37.00	46.89*	>20

Comments:
The theatre room volume includes the Scrub Up (27.81m³).
***The disposal room is shared with theatre 35 and the air change rates includes the grille related that that system which is extracting 824m³/hr.**

Room Pressures

Room Reference	SHTM Room Pressure (Pa)	Recorded Room Pressures (Pa)
Theatre	+25	+30
Anaesthetic	>10	+14
Prep	+25	+30
Disposal	-5	-10

ROYAL HOSPITAL FOR CHILDREN EDINBURGH

Section 6 – Theatre 35

Conventional Theatre only.

Air Change Rates

Room Reference	Design Volume m³/hr	Recorded Air Volume m³/hr	Design %	Room Volume m³	Recorded ac/hr	SHTM 03-01 Air Change Rates ac/hr
Theatre	4,320	4,723	109	171.88	26.77	25
Anaesthetic	810	936	116	50.57	17.44	15
Prep (lay-up)	324	385	119	33.08	11.43	>10
Disposal	756	824	109	37.60	46.89*	>20

Comments:
The theatre room volume includes the Scrub Up (30.18m³).
***The disposal room is shared with theatre 34 and the air change rates includes the grille related that that system which is extracting 911m³/hr.**

Room Pressures

Room Reference	SHTM Room Pressure (Pa)	Recorded Room Pressures (Pa)
Theatre	+25	+31
Anaesthetic	>10	+15
Prep	+25	+31
Disposal	-5	-10

ROYAL HOSPITAL FOR CHILDREN EDINBURGH

Section 7 – Theatre 36

UCV & Conventional Theatre.

UCV Air Change Rates

Room Reference	Design Volume m³/hr	Recorded Air Volume m³/hr	Design %	Room Volume m³	Recorded ac/hr	SHTM 03-01 Air Change Rates ac/hr
Theatre	4,147	5,396	130	190.46	28.33	25
Anaesthetic	810	882	109	51.63	17.08	15
Prep (lay-up)	324	382	118	31.59	12.09	>10
Disposal	1,476	1,530	104	32.73	46.75	>20

Comments:
The theatre room volume includes the Scrub Up (29.81m³).

Conventional Air Change Rates

Room Reference	Design Volume m³/hr	Recorded Air Volume m³/hr	Design %	Room Volume m³	Recorded ac/hr	SHTM 03-01 Air Change Rates ac/hr
Theatre	4,147	4,795	116	190.46	25.18	25
Anaesthetic	810	1,044	129	51.63	20.22	15
Prep (lay-up)	324	472	146	31.59	14.94	>10
Disposal	1,476	1,469	99	32.73	44.88	>20

Comments:
The theatre room volume includes the Scrub Up (29.81m³).

Room Pressures

Room Reference	SHTM Room Pressure (Pa)	Recorded Room Pressures (Pa) UCV Mode	Recorded Room Pressures (Pa) Conventional Mode
Theatre	+25	+37	+30
Anaesthetic	>10	+14	+15
Prep	+25	+31	+29
Disposal	-5	-5	-7

ROYAL HOSPITAL FOR CHILDREN EDINBURGH

Section 8 – Theatre 37

UCV & Conventional Theatre.

UCV Air Change Rates

Room Reference	Design Volume m³/hr	Recorded Air Volume m³/hr	Design %	Room Volume m³	Recorded ac/hr	SHTM 03-01 Air Change Rates ac/hr
Theatre	4,147	5,339	129	192.95	27.67	25
Anaesthetic	810	864	107	50.84	17.40	15
Prep (lay-up)	324	385	119	38.44	11.62	>10
Disposal	756	810	107	38.23	42.85*	>20

Comments:
The theatre room volume includes the Scrub Up (30.22m³).
***The disposal room is shared with theatre 38 and the air change rates includes the grille related that that system which is extracting 828m³/hr**

Conventional Air Change Rates

Room Reference	Design Volume m³/hr	Recorded Air Volume m³/hr	Design %	Room Volume m³	Recorded ac/hr	SHTM 03-01 Air Change Rates ac/hr
Theatre	4,147	4,982	120	192.95	25.82	25
Anaesthetic	810	922	114	50.84	18.14	15
Prep (lay-up)	324	432	133	38.44	11.24	>10
Disposal	756	774	102	38.23	42.56*	>20

Comments:
The theatre room volume includes the Scrub Up (30.22m³).
***The disposal room is shared with theatre 38 and the air change rates includes the grille related that that system which is extracting 853m³/hr**

Room Pressures

Room Reference	SHTM Room Pressure (Pa)	Recorded Room Pressures (Pa) UCV Mode	Recorded Room Pressures (Pa) Conventional Mode
Theatre	+25	+26	+25
Anaesthetic	>10	+15	+14
Prep	+25	+26	+25
Disposal	-5	-10	-10

ROYAL HOSPITAL FOR CHILDREN EDINBURGH

Section 9 – Theatre 38

UCV & Conventional Theatre.

UCV Air Change Rates

Room Reference	Design Volume m³/hr	Recorded Air Volume m³/hr	Design %	Room Volume m³	Recorded ac/hr	SHTM 03-01 Air Change Rates ac/hr
Theatre	4,147	5,493	132	200.98	27.33	25
Anaesthetic	810	828	102	51.71	16.01	15
Prep (lay-up)	324	382	118	31.35	12.19	>10
Disposal	756	828	110	38.23	42.85*	>20

Comments:
The theatre room volume includes the Scrub Up (31.64m³).
***The disposal room is shared with theatre 37 and the air change rates includes the grille related that that system which is extracting 810m³/hr**

Conventional Air Change Rates

Room Reference	Design Volume m³/hr	Recorded Air Volume m³/hr	Design %	Room Volume m³	Recorded ac/hr	SHTM 03-01 Air Change Rates ac/hr
Theatre	4,147	5,195	125	200.98	25.85	25
Anaesthetic	810	925	114	51.71	17.89	15
Prep (lay-up)	324	504	156	31.35	16.08	>10
Disposal	756	853	113	38.23	42.56*	>20

Comments:
The theatre room volume includes the Scrub Up (31.64m³).
***The disposal room is shared with theatre 37 and the air change rates includes the grille related that that system which is extracting 774m³/hr**

Room Pressures

Room Reference	SHTM Room Pressure (Pa)	Recorded Room Pressures (Pa) UCV Mode	Recorded Room Pressures (Pa) Conventional Mode
Theatre	+25	+35	+28
Anaesthetic	>10	+14	+14
Prep	+25	+34	+28
Disposal	-5	-10	-10

ROYAL HOSPITAL FOR CHILDREN EDINBURGH

Section 10 – Theatre 39

UCV & Conventional Theatre.

UCV Air Change Rates

Room Reference	Design Volume m³/hr	Recorded Air Volume m³/hr	Design %	Room Volume m³	Recorded ac/hr	SHTM 03-01 Air Change Rates ac/hr
Theatre	4,147	5,566	133	194.10	28.68	25
Anaesthetic	810	882	109	54.29	16.25	15
Prep (lay-up)	324	389	120	32.71	11.89	>10
Disposal	756	767	101	37.87	46.21*	>20

Comments:
The theatre room volume includes the Scrub Up (29.76m³).
***The disposal room is shared with Angio theatre and the air change rates includes the grille related that that system which is extracting 983m³/hr**

Conventional Air Change Rates

Room Reference	Design Volume m³/hr	Recorded Air Volume m³/hr	Design %	Room Volume m³	Recorded ac/hr	SHTM 03-01 Air Change Rates ac/hr
Theatre	4,147	5,000	121	194.10	25.76	25
Anaesthetic	10	925	114	54.29	17.04	15
Prep (lay-up)	324	425	131	32.71	12.99	>10
Disposal	756	806	107	37.87	47.24*	>20

Comments:
The theatre room volume includes the Scrub Up (29.76m³).
***The disposal room is shared with Angio theatre and the air change rates includes the grille related that that system which is extracting 983m³/hr**

Room Pressures

Room Reference	SHTM Room Pressure (Pa)	Recorded Room Pressures (Pa) UCV Mode	Recorded Room Pressures (Pa) Conventional Mode
Theatre	+25	+40	+35
Anaesthetic	>10	+16	+15
Prep	+25	+39	+35
Disposal	-5	-8	-9

Brookfield MULTIPLEX BM

Royal Hospital for Sick Children and
Department for Clinical Neurosciences Site Office
Little France Crescent, Edinburgh, EH16 4TJ
United Kingdom

T [redacted]
www.brookfieldmultiplex.com

18th December 2015
Ref: AK-MER/17158/031/002

In the event of queries please contact:
Andy Kerr

Mercury Engineering Limited
Mercury House, Pavilion 3
Finnieston Business Park
Minerva Way
Glasgow
G3 8AU

For the attention of Mr. Robert O'Donovan

Dear Sirs,

RHSC & DCN PROJECT
Notice to Commence the Sub-Contract Works (17183/031)

Notwithstanding the provisions of the sub-contract, we hereby confirm that the sub-contract works are to commence on site on 5th January 2016 as agreed between the parties. Please note that the sub-contract completion date remains as Monday 3rd July 2017.

Yours faithfully

[redacted]

Alasdair Fernie
Project Director
Brookfield Multiplex Construction Europe Ltd

Brookfield Multiplex Construction Europe Limited is registered in England and Wales
Registered Office: 99 Bishopsgate, 2nd Floor, London EC2M 3XD
VAT No. 749 323 906 Company No. 03809846

CONTRACT

Between

IHS Lothian Limited

And

BROOKFIELD MULTIPLEX CONSTRUCTION EUROPE LIMITED

CONTRACT FOR THE DESIGN AND CONSTRUCTION OF NEW FACILITIES AT THE ROYAL HOSPITAL FOR SICK CHILDREN, CHILD AND ADOLESCENT MENTAL HEALTH SERVICE AND THE DEPARTMENT OF CLINICAL NEUROSCIENCES AT THE ROYAL INFIRMARY EDINBURGH LITTLE FRANCE EDINBURGH

13 February **2015**

TABLE OF CONTENTS

PART 1: GENERAL

1. DEFINITIONS AND INTERPRETATION
2. EXECUTION AND DELIVERY OF DOCUMENTS
3. COMMENCEMENT AND DURATION
4. PROJECT DOCUMENTS
5. THE CONSTRUCTION OPERATIONS
6. GENERAL OBLIGATIONS AND RESPONSIBILITIES OF THE CONTRACTOR
7. DISCLOSED DATA
8. REPRESENTATIVES
8A. LITTLE FRANCE CAMPUS WORKING GROUP

PART 2: LAND ISSUES

9. NATURE OF LAND INTERESTS
10. THE SITE AND OFF-SITE
11. CONSENTS & PLANNING APPROVAL

PART 3: DESIGN AND CONSTRUCTION

12. THE DESIGN CONSTRUCTION AND COMMISSIONING PROCESS
12A. CDM REGULATIONS (SCOTLAND)
13. RIGHT OF ACCESS OF PROJECT CO'S REPRESENTATIVE, THE FUNDERS' TECHNICAL ADVISER, THE INDEPENDENT TESTER AND THE BOARD'S REPRESENTATIVE
13A. PROJECT CO'S RIGHT TO STOP CONSTRUCTION OPERATIONS DURING THE CONSTRUCTION PHASE
14. PROGRAMME AND DATES FOR COMPLETION
15. INDEPENDENT TESTER
16. EQUIPMENT
17. PRE-COMPLETION COMMISSIONING AND COMPLETION
17A. DEFECTS AND REMEDIAL WORKS
17B. LIQUIDATED DAMAGES
18. POST COMPLETION COMMISSIONING
19. FOSSILS AND ANTIQUITIES
19A. CONSORT INTERFACE WITH CAMPUS SITE AND/OR CAMPUS FACILITIES
19B. CARE OF THE WORKS
19C. PROPERTY IN GOODS, MATERIALS AND PLANT
19D. SUBMISSION OF DOCUMENTS
19E. INSTRUCTIONS
19F. REPORTING

PART 4: QUALITY ASSURANCE

20. QUALITY ASSURANCE

PART 5: NOT USED

21. NOT USED

PART 6: NOT USED

22. NOT USED
23. NOT USED
23A. NOT USED
24. NOT USED
25. NOT USED
26. NOT USED
27. SITE AND OFF-SITE SECURITY AND PERSONNEL ISSUES

28. STOCKS CONSUMABLES, MATERIALS AND EQUIPMENT

PART 7: DELAY EVENTS, RELIEF EVENTS AND FORCE MAJEURE

29. DELAY EVENTS
30. RELIEF EVENTS
31. FORCE MAJEURE

PART 8: CHANGES IN LAW & CHANGES

32. CHANGES IN LAW
33. CHANGE PROCEDURE

PART 9: FINANCIAL

34. PAYMENT
35. VAT AND CONSTRUCTION INDUSTRY TAX DEDUCTION SCHEME
36. NOT USED
37. NOT USED
38. RECORDS AND REPORTS

PART 10: TERMINATION

39. NOT USED
40. CONTRACTOR EVENT OF DEFAULT
40A. PROJECT CO EVENTS OF DEFAULT
41. TERMINATION RESULTING FROM FORCE MAJEURE
42. VOLUNTARY TERMINATION OF THE PROJECT AGREEMENT
42A. DEFAULT TO THE BOARD
43. NOT USED
44. CORRUPT GIFTS AND PAYMENTS
45. NOT USED
46. COMPENSATION ON TERMINATION
47. CONSEQUENCES OF TERMINATION
47A. FUNDERS' DIRECT AGREEMENT WITH THE BOARD
48. [NOT USED]

PART 11: INDEMNITIES, WARRANTIES & INSURANCE

49. INDEMNITIES
49A. NOT USED
50. TAX ON INDEMNITY PAYMENTS
51. NOT USED
52. NOT USED
53. INSURANCE
53A. UNINSURED LOSSES AND THIRD PARTY DAMAGE
54. EXCLUSIONS AND LIMITATIONS ON LIABILITY
54A. LIMITS ON CONTRACTOR'S LIABILITY

PART 12: MISCELLANEOUS

55. INTELLECTUAL PROPERTY
56. DISPUTE RESOLUTION PROCEDURE
57. ASSIGNATION AND SUB-CONTRACTING
58. OWNERSHIP INFORMATION AND CHANGES IN CONTROL
59. MITIGATION
60. DATA PROTECTION
61. CONFIDENTIALITY
62. FREEDOM OF INFORMATION
63. INFORMATION AND AUDIT ACCESS

64. NOTICES
65. NO WAIVER
66. NO AGENCY
67. ENTIRE AGREEMENT
68. THIRD PARTY RIGHTS
69. SEVERABILITY
70. CONFLICTS OF AGREEMENTS
71. COSTS AND EXPENSES
72. FURTHER ASSURANCE
73. COMMUNITY BENEFITS
74. GOVERNING LAW AND JURISDICTION
75. OVERRIDING ENTITLEMENTS
76. PROJECT CO BREACH AND NON PA ENTITLEMENT OBLIGATIONS
77. ENFORCEMENT OF PARALLEL ISSUES
78. CONSULTATION
79. INTERFACE
80. PROJECT CONSENTS
81. PROJECT CO'S COMPLIANCE WITH THE PROJECT AGREEMENT
82. CONSENTS AND APPROVALS

SCHEDULE

SCHEDULE PART 1	DEFINITIONS AND INTERPRETATION
SCHEDULE PART 2	COMPLETION DOCUMENTS
SCHEDULE PART 3	CONTRACTOR'S KEY WORKS PERSONNEL
SCHEDULE PART 4	FUNDERS' DIRECT AGREEMENT
SCHEDULE PART 5	LAND MATTERS
SCHEDULE PART 6	CONSTRUCTION MATTERS
SCHEDULE PART 7	THE PROGRAMME
SCHEDULE PART 8	REVIEW PROCEDURE
SCHEDULE PART 9	COLLATERAL AGREEMENTS WITH THE BOARD, PROJECT CO AND THE SECURITY TRUSTEE (CONTRACTOR / KEY SUBCONTRACTORS)
SCHEDULE PART 10	OUTLINE COMMISSIONING PROGRAMME
SCHEDULE PART 11	EQUIPMENT
SCHEDULE PART 12	SERVICE REQUIREMENTS
SCHEDULE PART 13	INDEPENDENT TESTER CONTRACT
SCHEDULE PART 14	CONTRACT SUM AND PAYMENT SCHEDULE
SCHEDULE PART 15	INSURANCE REQUIREMENTS
SCHEDULE PART 16	CHANGE PROTOCOL
SCHEDULE PART 17	COMPENSATION ON TERMINATION
SCHEDULE PART 18	[NOT USED]
SCHEDULE PART 19	RECORD PROVISIONS
SCHEDULE PART 20	DISPUTE RESOLUTION PROCEDURE
SCHEDULE PART 21	NOT USED
SCHEDULE PART 22	CERTIFICATES
SCHEDULE PART 23	[NOT USED]
SCHEDULE PART 24	[NOT USED]
SCHEDULE PART 25	[NOT USED]
SCHEDULE PART 26	COMMERCIALLY SENSITIVE INFORMATION
SCHEDULE PART 27	PLANS
SCHEDULE PART 28	BOARD POLICIES
SCHEDULE PART 29	PLANNING APPROVAL RESPONSIBILITIES SCHEDULE
SCHEDULE PART 30	BOARD ENABLING WORKS
SCHEDULE PART 31	CONSORT INTERFACE WITH CAMPUS SITE AND/OR CAMPUS FACILITIES
SCHEDULE PART 32	COMMUNITY BENEFITS
SCHEDULE PART 33	LIQUIDATED DAMAGES
SCHEDULE PART 34	FORM OF PERFORMANCE BOND
SCHEDULE PART 35	PARENT COMPANY GUARANTEE
SCHEDULE PART 36	INTERFACE AGREEMENT

SCHEDULE PART 37 CONTINGENT FUNDING AGREEMENT

BETWEEN:

(1) **"IHS Lothian Limited"** (registered under number SC493676) whose registered office is 50 Lothian Road, Edinburgh (**"Project Co"**); and

(2) **"Brookfield Multiplex Construction Europe Limited"** (registered under number 03808946) whose registered office is at 99 Bishopsgate, Second Floor, London EC2M 3XD (**"Contractor"**)

WHEREAS:

(A) The Project Co has entered into a Project Agreement with Lothian Health Board inter alia to develop new facilities at the Royal Hospital for Sick Children, Child and Adolescent Mental Health Service and the Department of Clinical Neurosciences at the Royal Infirmary of Edinburgh at Little France (the **"Project"**).

(B) The Project Co wishes to appoint the Contractor to carry out its obligations under the Project Agreement relating to the design, procurement, construction and commissioning of the Works and all other obligations expressed to be assumed by the Contractor in the Agreement.

(C) In accordance with the Scottish Government's NPD initiative, the Board conducted a competitive dialogue to identify the most economically advantageous tender from persons interested in being appointed the Board's private sector partner and forming a NPD company to procure the Project and the tender submitted by the Project Co has been selected as the most economically advantageous tender.

(D) The Project Agreement is excluded from the Housing Grants, Construction and Regeneration Act 1996 by virtue of the Construction Contracts (Scotland) Exclusion Order 1998 (S.I. 1998/686) as supplemented by the Construction Contracts (Scotland) Exclusion Order 2011/370 (Scottish SI).

NOW IT IS HEREBY AGREED as follows:

1. CONTRACTOR'S OBLIGATIONS

Upon and subject to the Conditions, the Contractor will, for the Contract Sum set out in Clause 2, be responsible for the investigations in respect of, and the design, construction, testing, commissioning and completion of, the Works and will perform and undertake the other obligations and risks to be performed or undertaken by the Contractor under this Agreement.

2. CONTRACT SUM

The Project Co will pay to the Contractor the Contract Sum (such sum being inclusive of all taxes (except value added tax), levies, duties, charges, fees, deductions or withholdings of any nature and any interest or penalties in relation to the Works) or such other sum as shall become payable under this Agreement together with value added tax, at the times and in the manner specified in the Conditions.

THE CONDITIONS

PART 1: GENERAL

1. DEFINITIONS AND INTERPRETATION

This Agreement shall be interpreted according to the provisions of Schedule Part 1 (*Definitions and Interpretation*).

2. EXECUTION AND DELIVERY OF DOCUMENTS

On or prior to execution of this Agreement:

2.1 the Contractor shall execute and deliver to the Project Co the documents referred to in Section 1 (*Documents to be delivered by the Contractor*) of Schedule Part 2 (*Completion Documents*) (unless the requirement to deliver any such document is waived by the Project Co by written notice to the Contractor);

2.2 the Project Co shall deliver to the Contractor the documents referred to in Section 2 (*Documents to be Delivered by Project Co*) of Schedule Part 2 (*Completion Documents*) (unless the requirement to deliver any such document is waived by the Contractor by written notice to the Project Co);

2.3 [Not Used];

2.4 [Not Used];

2.5 [Not Used];

2.6 [Not Used];

2.7 [Not Used].

3. COMMENCEMENT AND DURATION

This Agreement, and the rights and obligations of the parties, shall commence on the Effective Date.

4. PROJECT DOCUMENTS

Knowledge of Project Documents and Obligation to Comply

4.1 On or prior to the date of this Agreement, the Project Co has supplied the Contractor with copies of the Project Documents. The Contractor shall be deemed to have full and actual knowledge of the provisions of the Project Documents (including, on receipt of notice thereof, any modification, variation, addition, consolidation or amendment) and of the obligations, risks and liabilities assumed by the Project Co under the Project Documents, the Independent Tester Contract and the Insurance Requirements in Schedule Part 15 (*Insurance Requirements*) and the Land Matters in Schedule Part 5 (*Land Matters*) to this Agreement.

4.2 The Contractor shall perform and assume as part of its obligations under this Agreement the Project Co's obligations and risks under the Project Agreement (as if the same were expressly referred to in this Agreement as obligations and risks of the Contractor mutatis mutandis) insofar as the same relate to the design, construction, installation, testing, commissioning and completion of the Works, or the obligations of the Contractor hereunder. For the avoidance of doubt, the Contractor shall not be responsible for the Project Co's costs incurred in appointing the Independent Tester as envisaged in the Project Agreement.

4.3 The Contractor undertakes that neither it nor any Contractor Party will do anything or fail to do anything which would:

(a) cause, contribute or otherwise give rise to any breach by the Project Co of any of its obligations pursuant to the Project Agreement and the Funders' Direct Agreement with the Contractor; or

(b) cause, contribute to or otherwise give rise to any other liability on the part of the Project Co in connection with the Project Agreement and the Funders' Direct Agreement with the Contractor or pursuant to any Law or Consent; or

(c) prejudice or lead to the diminution of, or loss of, any other rights, entitlements or other benefits of the Project Co under the Project Documents or pursuant to any Law or Consent.

4.4 The Contractor shall compensate the Project Co for all losses, damages, costs, expenses, claims, demands, proceedings or liability that the Project Co incurs as a result of a breach of Clause 4.3, provided that the Contractor shall not be liable to the Project Co under this Clause 4.4 where the Contractor's act or omission results from a breach by the Project Co of its obligations under this Agreement or any instruction given by the Project Co under Clause 19E (*Instructions*).

4.5 No change to, or waiver of, any Project Document shall have the effect of increasing, extending or varying the Contractor's liabilities under this Agreement unless otherwise agreed by the Contractor in writing or implemented as a Change under Clause 33.

4.6 The Contractor shall not have liability under any replacement of a Project Document to the extent that the liability is greater than the liability the Contractor would have had if the replacement Project Document was on the same terms as the original Project Document provided to the Contractor, unless otherwise agreed by the Contractor in writing or implemented as a Change under Clause 33.

5. THE CONSTRUCTION OPERATIONS

Scope

5.1 Subject to and in accordance with the provisions of this Agreement, the Contractor shall perform its duties under this Agreement at its own cost and risk without recourse to the Project Co except as otherwise expressly provided in this Agreement.

General standards

5.2 The Contractor shall at its own cost be solely responsible for procuring that the Construction Operations are at all times performed:

5.2.1 in compliance with all Law and Consents (including without limitation the giving of notices and the obtaining of any such Consents) and so as not to prejudice the renewal of any such Consents;

5.2.2 in a manner that is not likely to be injurious to health or to cause damage to property;

5.2.3 in a manner consistent with the Design Quality Plan and the Construction Quality Plan and that does not adversely affect the ability of the Service Provider to comply with the Method Statements and the Service Level Specification;

5.2.4 except to the extent expressly stated to the contrary in the Board's Construction Requirements, in compliance with all applicable NHS Requirements;

5.2.5 in a manner consistent with the Board discharging its statutory duties and other functions undertaken by the Board as the same may be notified to the Contractor from time to time;

5.2.6 in so far as not in conflict with an express obligation of the Contractor under this Agreement, or where in relation to a matter there is no express obligation or standard imposed on the Contractor under this Agreement, in accordance with Good Industry Practice; and

5.2.7 without prejudice to the foregoing generality, where any of the Construction Operations are to be carried out on any part of the Retained Site and/or the Retained Estate in compliance with the reasonable requirements of the Project Co, which the Contractor acknowledges may include the reasonable requirements of the Board, Consort and/or the University and/or other parties with an interest in the Retained Site and/or Retained Estate, such reasonable requirements shall, for the avoidance of doubt, always be communicated to the Contractor by the Project Co, and PROVIDED ALWAYS that where, in the reasonable opinion of the Contractor such requirements would give rise to it incurring material additional costs (which, in respect of the Works including the correction of Defects or Snagging Matters, shall be additional costs of five thousand pounds (£5,000) or more per reasonable requirement), the Contractor shall require the Project Co to serve a Change Notice on the Contractor in accordance with Clause 33 and Schedule Part 16 (*Change Protocol*) and the Contractor shall not be obliged to comply with such requirements other than in

accordance with the provisions of Schedule Part 16 (*Change Protocol*).

In the event that any ambiguity, uncertainty, dispute or discrepancy arises in the nature and scope of the Contractor's obligations under this Clause 5.2 (*General standards*), the provisions of this Clause 5.2 (*General standards*) will be given meaning and have effect in descending order of precedence set out in this Clause 5.2 (*General standards*).

5.3 Not Used

Co-operation

5.4 Each party agrees to co operate, at its own expense, with the other party in the fulfilment of the purposes and intent of this Agreement. To avoid doubt, neither party shall be under any obligation to perform any of the other's obligations under this Agreement.

5.5 [Not Used]

5.6 Without prejudice to the binding contractual obligations set out in this Agreement, the Parties recognise and agree that the partnering ethos, principles and objectives described and set out in Section 4.30 (*Partnering and Collaborative Working*) of the Project Co's Proposals and/or Section 1.3 (*Partnership) of the* Method Statement are aspirational and shall not and are not intended to give rise to legally binding rights and obligations between the Parties.

Enabling Works

5.7 The Project Co shall procure the Board to carry out and complete each element of the Board Enabling Works in accordance with the requirements corresponding to that element as set out in Schedule Part 30 *(Board Enabling Works).*

Performance Bond

5.8 The Contractor shall take all necessary actions to ensure that:

5.8.1 the Performance Bond is maintained in full force and effect throughout the period from execution of this Agreement until the date of issue of the Certificate of Making Good Defects (the "**PB Expiry Date**").

5.8.2 If, following a claim by the Security Trustee under a Performance Bond, it is agreed by the parties or determined that the Security Trustee was not entitled to make such claim or that the amount received by the Security Trustee under the Performance Bond exceeds the amount that the Project Co was entitled to claim against the Contractor under the terms of this Agreement then the Project Co will pay to the Performance Bond Provider the aggregate of the following amounts:

(a) the amount by which the amounts received under the Performance Bond exceeds the amount that the Project Co was entitled to claim against the Contractor under the terms of this Agreement;

(b) interest on the amount stated in (a) above at the Default Interest Rate from the date of payment of the relevant overpayment under the Performance Bond up to but excluding the date on which the Project Co pays such

amount under this Clause to the Performance Bond Provider; and

(c) any additional reasonable costs, losses or damages incurred by the Contractor in connection with the claim under the Performance Bond which would not have been incurred had the Project Co not claimed more than it was entitled to claim.

5.8.3 If, prior to the PB Expiry Date, the credit rating of the Performance Bond Provider falls below the Required Credit Rating or as otherwise agreed by the Parties the Contractor shall, subject to Clause 5.8.4, within twenty (20) Business Days or such other period as has been agreed by the Parties of the occurrence of such event:

(a) provide a replacement Performance Bond from a Performance Bond Provider who is rated at least at the Required Credit Rating on the same terms as the original Performance Bond; or

(b) provide other security in lieu of the Performance Bond from a provider, and on terms, acceptable to the Parties,

provided that the Contractor shall be under no obligation to procure that the term and value of any such replacement Performance Bond or other security is greater than the remaining term or remaining value required as at the date of procurement of the replacement Performance Bond or other security.

5.8.4 If on the occurrence of an event set out in Clause 5.8.3, the Contractor fails to provide a replacement Performance Bond or other security in accordance with, and in the time period provided for in, Clause 5.8.3, the Project Co shall be entitled to withhold an additional ten percent (10%) of any amount included in an Interim Payment until the earlier of the date:

(a) the existing Performance Bond remains in place and the credit rating of the Performance Bond Provider is returned to A- S&P or above;

(b) a replacement Performance Bond or other security in lieu of the Performance Bond is provided in accordance with Clause 5.8.3;

(c) the expiry of the remaining term of the Performance Bond; and

(d) the amount of the retention equals the maximum liability amount of the Performance Bond less any claims made against the Performance Bond.

Any amount of retention withheld in accordance with this Clause 5.8.3 shall be in addition to the Retention Percentage. Clauses 34.16 to 34.18 shall apply to the amounts withheld pursuant to this Clause 5.8.4 as if the word "Retention" had been replaced with the words "amount withheld pursuant to Clause 5.8.4". Any amount of retention withheld in accordance with this Clause 5.8.4 shall be repaid less any deductions made in accordance with Clause 34.18

within five (5) Business Days of the earlier of the date set out in Clauses 5.8.4(a) to (c).

5.8.5 If the Performance Bond Provider's rating falls below BBB+ S&P or as otherwise agreed by Project Co ("**Rating Event**"), and the Contractor fails to:

(a) provide a replacement Performance Bond from a performance bond provider who is rated at or above the Required Credit Rating and on the same terms as the original Performance Bond; or

(b) provide other security in lieu of the Performance Bond from a provider and on terms acceptable to Project Co,

within twenty (20) Business Days or such other period as has been agreed by the Parties of the occurrence of such event then, subject to Clause 5.8.6, it is deemed, without further notice, to be a Contractor Event of Default under Clause 40.1.15.

5.8.6 If on the date of the occurrence of any Rating Event set out in Clause 5.8.5 there has been an Extraordinary Market Event, the Contractor shall provide a mitigation strategy to the Project Co within ten (10) Business Days or such other period as has been agreed by the Parties of the occurrence such event for the Project Co's approval. If such mitigation strategy:

(a) is not provided within time;

(b) is not acceptable to the Project Co; or

(c) is accepted by the Project Co but the Contractor fails to comply with such mitigation strategy and at the time of such failure the Contractor has not provided other security in accordance with Clause 5.8.5(b),

then it is deemed, immediately upon notice, to be a Contractor Event of Default under Clause 40.1.5.

"**Extraordinary Market Event**" means the occurrence of extraordinary circumstances in the financial markets of the European Union or the United States of America that has the effect of causing a downgrade of the credit ratings of a significant number of sureties, including the Performance Bond Provider.

5.8.7 In the event that the Contractor provides other security in lieu of the Performance Bond on terms acceptable to the Project Co, the Project Co will release the Performance Bond and return the original Performance Bond to the Contractor.

6. GENERAL OBLIGATIONS AND RESPONSIBILITIES OF THE CONTRACTOR

No other business

6.1 The Contractor shall not engage in any business or activity on the Site, the Off-Site or the Retained Site other than the business or activities related to, and conducted for, the purpose of the Construction Operations.

Contractor Parties

6.2 Subject to the provisions of Clause 30.1.7 (*Relief Events*), the Contractor shall not be relieved or excused of any responsibility, liability or obligation under this Agreement by the appointment of any Contractor Party. The Contractor shall, as between itself and the Project Co, be responsible for the selection, pricing, performance, acts, defaults, omissions, breaches and negligence of all Contractor Parties. All references in this Agreement to any act, default, omission, breach or negligence of the Contractor shall be construed accordingly to include any such act, default, omission, breach or negligence of a Contractor Party.

Safety

6.3 The Contractor shall, in carrying out the Construction Operations, have full regard for the safety of all persons on the Site, the Retained Site and/or Off-Site (whether lawfully or not) and keep the Site and/or Off-Site, the Works and the Facilities in an orderly state, appropriate in accordance with Good Industry Practice, to avoid danger to such persons. The Contractor shall take such measures including fencing of the Site, the Off-Site, and the Retained Site, where appropriate in accordance with this Agreement as are reasonable in accordance with Good Industry Practice to prevent access on to the Site, the Off-Site and the Retained Sited of any persons or creatures not entitled to be there.

7. DISCLOSED DATA

No liability

7.1 Save where expressly provided otherwise pursuant to Clauses 10.3 to 10.5 (*Responsibility for Contamination*), the Project Co shall not be liable to the Contractor for, and the Contractor shall not seek to recover from any of the Board, any Board Party, the Project Co or any Project Co Party any damages, losses, costs, liabilities or expenses which may arise (whether in contract, delict or otherwise) from the adoption, use or application of the Disclosed Data by, or on behalf of, the Contractor or any Contractor Party.

No warranty

7.2 The Project Co gives no warranty or undertaking of whatever nature in respect of the Disclosed Data and, specifically (but without limitation), the Project Co does not warrant that the Disclosed Data represents all of the information in its possession or power (either during the conduct of the tender process for the Project or at the time of execution of this Agreement) relevant or material to or in connection with the Project or the obligations of the Contractor under this Agreement. In addition, the Project Co shall not be liable to the Contractor in respect of any failure to disclose or make available to the Contractor (whether before, on or after the execution of this Agreement) any information, documents or data, nor any failure to review or to update the Disclosed Data, nor any failure to inform the Contractor (whether before, on or after execution of this Agreement) of any inaccuracy, error, omission, defects or inadequacy in the Disclosed Data.

Contractor investigation

7.3 The Contractor acknowledges and confirms that:

7.3.1 it has conducted its own analysis and review of the Disclosed Data and has, before the execution of this Agreement, satisfied itself as to the accuracy, completeness and fitness for purpose of any such Disclosed Data upon which it places reliance; and

7.3.2 save as expressly provided otherwise pursuant to Clause 10.3 to 10.5 (*Responsibility for Contamination*) it shall not be entitled to and shall not (and shall procure that no Contractor Party shall) make any claim against any of the Board, any Board Party, the Project Co or any Project Co Party whether in contract, delict or otherwise including, without limitation, any claim in damages, for extensions of time or for additional payments under this Agreement on the grounds:

(a) of any misunderstanding or misapprehension in respect of the Disclosed Data; or

(b) that incorrect or insufficient information relating to the Disclosed Data was given to it by any person, whether or not the Board, a Board Party, the Project Co or a Project Co Party,

nor shall Contractor be relieved from any obligation imposed on, or undertaken by it, under this Agreement on any such ground.

Utilities and Energy

7.4 During the Construction Phase and prior to the Actual Completion Date, the Contractor shall be liable for all costs of gas, electricity and all other utilites consumed at the Site.

8. REPRESENTATIVES

Representatives of the Project Co

8.1 The Project Co's Representative shall be Wallace Weir or such other person appointed pursuant to this Clause. The Project Co's Representative shall exercise the functions and powers of the Project Co in relation to the Construction Operations which are identified in this Agreement as functions or powers to be carried out by the Project Co's Representative. The Project Co's Representative shall also exercise such other functions and powers of the Project Co under this Agreement as may be notified to the Contractor from time to time.

8.2 The Project Co's Representative shall be entitled at any time, by notice to the Contractor, to authorise any other person to exercise the functions and powers of the Project Co delegated to him pursuant to this Clause, either generally or specifically. Any act of any such person shall, for the purposes of this Agreement, constitute an act of the Project Co's Representative and all references to the "**Project Co's Representative**" in this Agreement (apart from this Clause) shall be taken as references to such person so far as they concern matters within the scope of such person's authority.

8.3 The Project Co may by notice to the Contractor change the Project Co's Representative. The Project Co shall (as far as practicable) consult with the Contractor prior to the appointment of any replacement for the Project Co's Representative, taking account of the need for liaison and continuity in respect of the Project. Such change shall have effect on the date specified in the written notice (which date shall, other than in the case of emergency, be such date as will not cause material inconvenience to the Contractor in the execution of its obligations under this Agreement).

8.4 During any period when no Project Co's Representative has been appointed (or when the Project Co's Representative is unable through illness, incapacity or any other reason whatsoever to carry out or exercise his functions under this

Agreement) the Project Co shall carry out the functions which would otherwise be performed by the Project Co's Representative.

8.5 No act or omission of the Project Co, the Project Co's Representative or any officer, employee or other person engaged by the Project Co shall, except as otherwise expressly provided in this Agreement:

8.5.1 in any way relieve or absolve the Contractor from, modify, or act as a waiver or personal bar of, any liability, responsibility, obligation or duty under this Agreement; or

8.5.2 in the absence of an express order or authorisation under Schedule Part 16 (*Change Protocol*), constitute or authorise a Change.

8.6 Except as previously notified in writing before such act by the Project Co to the Contractor, the Contractor and the Contractor's Representative shall be entitled to treat any act of the Project Co's Representative which is authorised by this Agreement as being expressly authorised by the Project Co and the Contractor and the Contractor's Representative shall not be required to determine whether an express authority has in fact been given.

Representative of the Contractor

8.7 The Contractor's Representative shall be Alasdair Fernie or such other person appointed pursuant to Clause 8.8. The Contractor's Representative shall have full authority to act on behalf of the Contractor for all purposes of this Agreement. Except as previously notified in writing before such act by the Contractor to the Project Co, the Project Co and the Project Co's Representative shall be entitled to treat any act of the Contractor's Representative in connection with this Agreement as being expressly authorised by the Contractor and the Project Co and the Project Co's Representative shall not be required to determine whether any express authority has in fact been given.

8.8 The Contractor may by notice to the Project Co change the Contractor's Representative. Where the Contractor wishes to do so it shall by written notice to the Project Co propose a substitute for approval, taking account of the need for liaison and continuity in respect of the Project. Such appointment shall be subject to the approval of the Project Co (not to be unreasonably withheld or delayed).

8.9 No act or omission of the Contractor, the Contractor's Representative or any officer, employee or other person engaged by the Contractor shall, except as otherwise expressly provided in this Agreement:

8.9.1 in any way relieve or absolve the Contractor from, modify, or act as a waiver or estoppel of, or personal bar to, any liability, responsibility, obligation or duty under this Agreement; or

8.9.2 in the absence of an express order or authorisation under Schedule Part 16 (*Change Protocol*), constitute or authorise a Change.

8.10 The Contractor's Key Works Personnel are identified in Schedule Part 3 (*Contractor's Key Works Personnel*). The Contractor shall, as far as it is within the Contractor's control, ensure that such persons retain their involvement in the Works and, in particular, will not, for the duration of the Works, require or request any of them to be involved in any other project on behalf of the Contractor or any of its Associated Companies if, in the reasonable opinion of the Project Co, this would adversely affect the Project.

8.11 Not Used

8.12 Not Used

8.13 Not Used

8.14 Not Used

8A. LITTLE FRANCE CAMPUS WORKING GROUP

8A.1 The Contractor hereby acknowledges the Project Co's obligations, pursuant to Clause 8A of the Project Agreement, in connection with the Little France Campus Working Group. The Contractor shall at all times during the performance of the Works and its other obligations under this Agreement take all such steps as may reasonably be required by the Project Co in order to facilitate compliance by the Project Co with such obligations, including, if so required, (without limitation) attending meetings of the Little France Campus Working Group. The Project Co shall use reasonable endeavours to include the Contractor at meetings of the Little France Campus Working Group in an active capacity or, failing that, in a consultative capacity whilst any Works or Snagging Matters are being completed or Defects are being rectified at any of the Site.

8A.2 The Contractor may at any time make representations to the Project Co in respect of matters to be discussed by the Liaison Committee pursuant to Clause 8A of the Project Agreement. The Project Co shall consider such representations in good faith, and, provided that such representations are neither frivolous nor vexatious, shall be obliged to make any such representations on the Contractor's behalf to the Little France Campus Working Group.

PART 2: LAND ISSUES

9. NATURE OF LAND INTERESTS

Access During Construction

9.1 From the Commencement Date until the Actual Completion Date or (if earlier) the Termination Date and upon being granted equivalent rights by the Board under the Project Agreement, the Project Co shall grant to the Contractor and the Contractor Parties, the Ancillary Rights in each case subject only to the Reserved Rights, the Title Conditions and the Board's rights under the Project Agreement and solely for the purposes of implementing the Works and carrying out the Contractor's Pre-Completion Commissioning.

Access Following Construction

9.2 After the occurrence of the Actual Completion Date and upon being granted equivalent rights by the Board under the Project Agreement the Project Co shall grant to the Contractor and the Contractor Parties, the Ancillary Rights subject only to the Reserved Rights, the Title Conditions and the provisions of this Agreement and solely for the purposes of:

9.2.1 Not Used

9.2.2 remedying Defects and carrying out Snagging Matters pursuant to Clause 17A (*Defects and Remedial Works*);

9.2.3 Not Used.

Such rights shall terminate on the date of the Certificate of Making Good Defects or (if earlier) the Termination Date.

Extent of Rights

9.3 The rights referred to at Clauses 9.1 (*Access During Construction*) and 9.2 (*Access Following Construction*) shall not operate or be deemed to operate as a lease of the Facilities, the Retained Estate Handback Infrastructure, the Site or Off-Site or any part of the Facilities, the Retained Estate Handback Infrastructure, the Site or Off-Site and the Contractor shall not have or be entitled to exclusive possession (save to the extent expressly included within the Ancillary Rights) or any estate, right, title or interest in and to the Facilities, the Retained Estate Handback Infrastructure, the Site or Off-Site except as provided herein and shall occupy the Site as a licensee only

9.4 The rights referred to at Clause 9.1 (*Access During Construction*) and Clause 9.2 (*Access Following Construction*) are personal to the Contractor and the Contractor Parties.

9.5 The Contractor shall procure that:

9.5.1 all Construction Operations carried out at the Site or Off-Site by or on behalf of the Contractor (whether before, during or after the completion of the Works) shall be carried out in a manner which does not breach any of the Title Conditions and/or the Reserved Rights; and

9.5.2 there shall be no action, or omission to act by the Contractor or a Contractor Party, which shall give rise to a right for any person to obtain title to the Site and/or Off-Site or any part of it.

9.6 Notwithstanding the terms of Clauses 9.1 and 9.2 or any other rights granted under this Agreement, the Project Co shall procure that the Board shall (if the Board is the heritable proprietor of the Site or Off-Site), or (if the Board is not the heritable proprietor of the Site or Off-Site) that the Board shall procure that the heritable proprietor of the Site and/or Off-Site shall, enter into such wayleaves, deeds of servitude or other similar agreements with any third party that the Contractor or any Contractor Party may require to be granted in favour of or by any third party, in order to exercise its rights or perform its obligations under this Agreement. The Project Co shall procure that the Board shall enter into (or, where appropriate, that the Board shall procure that the heritable proprietor of the Site and/or Off-Site shall enter into) any such wayleave, deed of servitude or other similar agreement, as soon as reasonably practicable after the Contractor has provided to the Project Co all relevant information in connection therewith provided always that Contractor has obtained at its own cost the prior agreement of the third party in terms acceptable to the Project Co (acting reasonably). The Project Co shall be deemed to be acting reasonably in rejecting the terms of the agreement with the third party where the Board rejects the terms of the agreement with the third party pursuant to Clause 9.6 of the Project Agreement. The Contractor shall reimburse the Project Co for all costs and expenses reasonably and properly incurred by the Project Co (including the costs and expenses of the Board and/or the heritable proprietor of the Site and/or Off-Site) in connection with entering into such wayleaves, deeds of servitude or other similar agreements at the request of the Contractor. The Project Co shall have no obligations in terms of this Clause 9.6 in relation to any land or interest in land which is procured by the Contractor for the purpose of locating any electricity sub-station, or any ancillary apparatus or cabling to serve such sub-station if such land does not form part of (i) the Site or (ii) limb (a) or (b) of the definition of Off-Site.

10. THE SITE AND OFF-SITE

10.1 Subject to Clauses 10.3 and 10.4, the condition of the Site shall be the sole responsibility of the Contractor and the condition of the Off-Site shall be the

responsibility of the Contractor when carrying out the Construction Operations and to the extent that the condition of the Off-Site is affected by such Construction Operations. Accordingly (without prejudice to any other obligation of the Contractor under this Agreement), the Contractor shall be deemed to have:

10.1.1 reviewed and taken cognisance of the Ground Physical and Geophysical Investigation and the Petrol Station Site Contamination Investigation and to have inspected and examined the Site and Off-Site and its surroundings and (where applicable) any existing structures or works on, over or under the Site and Off-Site;

10.1.2 satisfied itself as to the nature of the Site Conditions and Off-Site Conditions, the ground and the subsoil, the form and nature of the Site and Off-Site, the load bearing and other relevant properties of the Site and Off-Site, the risk of injury or damage to property affecting the Site and Off-Site, the nature of the materials (whether natural or otherwise) to be excavated and the nature of the design, work and materials in each case, necessary for the execution of the Works;

10.1.3 satisfied itself as to the extent and adequacy of the Site and Off-Site and of the rights of access to and from and through the Site and Off-Site granted hereunder and any accommodation it may require for the purposes of fulfilling its obligations under this Agreement (such as additional land or buildings outside the Site) without prejudice to Contractor's rights under this Agreement in respect of a breach by the Project Co of its obligations under Clause 9.1 (*Access During Construction*) and/or Clause 9.3 (*Extent of Rights*);

10.1.4 satisfied itself as to the reasonable precautions, times and methods of working necessary to prevent any nuisance or interference, whether public or private, being caused to the Board, the Project Co or any third parties including without limitation Consort, Consort Parties, the University and any University Parties; and

10.1.5 satisfied itself as to the conditions, burdens, restrictions and reservations set out in the Title Conditions and the Reserved Rights.

10.2 Subject to Clause 10.3, to avoid doubt, the Contractor accepts full responsibility for all matters referred to in Clause 10.1 and the Contractor shall:

10.2.1 not be entitled to make any claim against the Project Co, any Project Co Party or the Board or a Board Party, of any nature whatsoever save, if applicable, as expressly provided in Clause 29 (*Delay Events*), on any grounds including (without limitation) the fact that incorrect or insufficient information on any matter relating to the Site and Off-Site was given to it by any person, whether or not the Project Co, any Project Co Party, the Board or a Board Party;

10.2.2 be responsible for, and hold the Project Co and the Board harmless from, (1) cleaning up and/or otherwise dealing with any Contamination at the Site and Off-Site and (2) that it shall at all times comply with its obligations under this Agreement including (without limitation) complying with, at its own cost, any applicable Laws and any Consents, orders, notices or directions of any

regulatory body (whether made against the Board, the Project Co or the Contractor).

Responsibility for Contamination

10.3 Notwithstanding the terms of Clause 10.2, and subject to Clause 10.5, save to the extent that the Contractor has a valid legal claim for breach of duty of care and/or negligence against the provider of the Ground Physical and Geophysical Investigations and/or the Petrol Station Site Contamination Investigation in respect of its loss the Project Co shall, subject to Clause 75 (*Overriding Entitlements*) be responsible for:

10.3.1 Relevant Petrol Station Site Contamination; and

10.3.2 any Contamination arising after the Commencement Date caused by the Project Co or any Project Co Party whether directly or indirectly, at the Site or Off-Site.

If the Project Co is responsible for any Contamination under this Clause 10.3, the provisions of Clause 10.4 shall apply.

10.4 Where pursuant to Clause 10.3 the Project Co is responsible for any Contamination then the following provisions shall apply:

10.4.1 during the Construction Phase any such matter is deemed to be a Compensation Event for the purposes of this Agreement;

10.4.2 [Not Used];

10.4.3 [Not Used];

10.4.4 where any such matter is Contamination the Project Co shall, subject to Clause 75 (*Overriding Entitlements*), further hold the Contractor harmless from cleaning up and otherwise dealing with the Contamination and shall indemnify the Contractor in respect of all Direct Losses incurred by the Contractor resulting from such Contamination.

10.5 Where the Contactor has a valid claim for breach of duty of care and/or negligence of the provider of the Ground Physical and Geophysical Investigations and/or the Petrol Station Site Contamination Investigation, the Contractor shall claim against the provider of the Ground Physical and Geophysical Investigations and/or the Petrol Station Site Contamination Investigation as the case may be to the fullest extent possible pursuant to the applicable Letter of Reliance and shall enforce to the fullest extent any judgement or award against the provider of the Ground Physical and Geophysical Investigations and/or the Petrol Station Site Contamination Investigation. Subject to Clause 75 *(Overriding Entitlements)* the Project Co shall be responsible for any loss suffered by the Contractor in accordance with Clause 10.4 as a result of any Contamination under Clause 10.3 exceeds the liability caps of the provider of the Ground Physical and Geophysical Investigations and/or the Petrol Station Site Contamination Investigation under their relevant contracts, or which cannot be recovered by the Contractor due to such provider being insolvent.

11. CONSENTS & PLANNING APPROVAL

11.1 Subject to Clause 11.3, the Contractor shall be responsible for:

11.1.1 obtaining all Consents which may be required for the performance of the Construction Operations; and

11.1.2 implementing each Consent within the period of its validity in accordance with its terms.

11.2 In the event that:

11.2.1 a Consent that has been granted is subsequently amended, repealed, revoked or otherwise ceases to be in full force and effect in accordance with its terms as a consequence of any action by a Relevant Authority;

11.2.2 affected persons are entitled to claim compensation for the adverse effects of such action under a statutory scheme of compensation; and

11.2.3 the Contractor is not entitled in its own name to claim under that scheme but the Board is so entitled,

the Project Co shall procure that the Board uses all reasonable endeavours, at the request and at the cost of the Contractor, to claim or to include within its claim such sums as the Contractor acting reasonably requests the Board to claim and subject, to Clause 75 (*Overriding Entitlements*), the Project Co shall pay to the Contractor the part of any compensation that the Project Co receives from the Board under the relevant scheme that relates to the sums claimed at the request of the Contractor.

Board's Consents and Planning Obligations

11.3 The Project Co shall procure that the Board shall implement and satisfy each of the conditions and reserved matters of the Planning Approval in respect of which responsibility for the same has been allocated to the Board in in the table set out in Part 1 of Schedule Part 29 *(Planning Approval Responsibilities)* of the Project Agreement. The Contractor shall implement and satisfy each of the conditions and reserved matters of the Planning Approval in respect of which responsibility for the same has been allocated to the Project Co in the table set out in Part 2 of Schedule Part 29 *(Planning Approval Responsibilities)*.

PART 3: DESIGN AND CONSTRUCTION

12. THE DESIGN CONSTRUCTION AND COMMISSIONING PROCESS

Overall Responsibility

12.1 The Contractor shall carry out the Works:

12.1.1 so as to procure satisfaction of the Board's Construction Requirements;

12.1.2 in accordance with the Project Co's Proposals; and

12.1.3 in accordance with the terms of this Agreement.

12.2 To avoid doubt, the obligations in Clauses 12.1.1, 12.1.2 and 12.1.3 are independent obligations. In particular:

12.2.1 the fact that the Contractor has complied with the Project Co's Proposals shall not be a defence to an allegation that the Contractor has not satisfied the Board's Construction Requirements; and

12.2.2 the fact that Contractor has satisfied the Board's Construction Requirements shall not be a defence to an allegation that Contractor has failed to comply with Project Co's Proposals.

12.2A Without prejudice to Clause 12.1 and Clause 12.2 the Contractor warrants and undertakes to the Project Co as separate warranties and undertakings that:

(a) the Works are, or shall be, constructed in a good and workmanlike manner and in any event in accordance with Good Industry Practice;

(b) the Works comprise, or will comprise, materials or goods which are of sound, satisfactory quality;

(c) the Works will be carried out in each case, having regard to the design life expectancies in Schedule Part 6 (*Construction Matters*);

(d) the Works will comply with Paragraph 2.3 - 3.7 inclusive (Design and Installation of the Energy Plant) of Section 4 (*Energy Strategy)* of Schedule Part 12 (*Service Requirements*)/of the Project Agreement;

(e) subject to proper maintenance, the structural aspects of the Works will satisfy the Board's' Construction Requirements and Project Co's Proposals for the Operational Term;

(f) it has the competence to perform the Construction Operations;

(g) it has allocated and will allocate adequate resources to enable it to perform the Construction Operations;

(h) it will carry out the Works using reasonable endeavours to avoid inconvenience and disruption to the Board, the Board Parties, the Project Co and the Project Co Parties; and

(i) the Works will on the Actual Completion Date meet (and thereafter, subject to proper maintenance and having regard to the required life expectancy of elements of the Facilities, be capable of meeting, save where third party damage has occurred which is not caused or contributed to by the Contractor or any Contractor Party) the requirements set out in Schedule 6 to the Interface Agreement.

Design responsibility

12.3 The Contractor warrants that it has used, and will continue to use, the degree of skill and care in the design of the Works that would reasonably be expected of a competent, professional designer experienced in carrying out design activities of a similar nature, scope and complexity to those comprised in the Works.

Corporate Identity and Signage

12.4 The Contractor acknowledges Clause 12.4 of the Project Agreement and that the Board may, from time to time during the Construction Phase, require the Project

Co to procure the erection of hoarding, site boards, plaques and/or other signage in connection with the Project. Accordingly:

12.4.1 where requested by the Project Co pursuant to this Clause 12.4, the Contractor shall procure the erection and maintenance of such hoarding, site boards, plaques and/or other signage as the Project Co may require; and

12.4.2 the size, design, information disclosed, position and materials used in connection with such hoarding, site boards, plaques or other signage shall be approved by the Board in accordance with Clause 12.4.2 of the Project Agreement; and

12.4.3 [Not Used]

Board design approval

12.5 The parties acknowledge that pursuant to Clause 12.5 of the Project Agreement, as at the date of this Agreement the Board has confirmed that it has reviewed such of Project Co's Proposals as have been initialled by the Board and that, subject to any qualifications and/or comments notified by the Board to Project Co in writing and set out in Section 9 (The Agreed Form Board's Qualifications/Comments) of Schedule Part 6 (*Construction Matters*) such proposals satisfy the Board's requirements in respect of Operational Functionality, so far as can reasonably be determined given the level of detail of Design Data which has been disclosed to the Board.

12.6 The Contractor shall develop and finalise the design and specification of the Works in accordance with Schedule Part 8 (*Review Procedure*) and the provisions of this Clause 12.6:

12.6.1 the Contractor shall submit the Reviewable Design Data and the design of any Changes developed in accordance with the procedure set out in Schedule Part 16 (*Change Protocol*) to the Project Co's Representative for review under Schedule Part 8 (*Review Procedure*). The Contractor shall not commence or permit the commencement of construction of the part or parts of the Works to which such Reviewable Design Data relates until it has submitted the appropriate Reviewable Design Data and either it is confirmed by the Project Co's Representative that the Contractor is entitled to proceed with construction in accordance with paragraph 3.3 of Schedule Part 8 (*Review Procedure*) or the Contractor is disputing the status of such Reviewable Design Data pursuant to paragraph 1.3.1 or paragraph 4.3 of Schedule Part 8 (*Review Procedure*). If the Contractor commences or permits the commencement of construction during a dispute and it is subsequently determined in accordance with Schedule Part 20 (*Dispute Resolution Procedure*) that the Contractor was not entitled to proceed with construction in accordance with paragraph 1.3.2 of Schedule Part 8 (*Review Procedure*) then the Contractor shall forthwith, at its own cost, undo, remove from the Site and replace (in a manner complying with this Agreement) any parts of the Works which it has been determined the Contractor was not entitled to construct;

12.6.2 with effect from the date at which any item of Reviewable Design Data is or becomes an Approved RDD Item in accordance with Schedule Part 8 (*Review Procedure*), such Approved RDD Item shall for the purposes of this Agreement be deemed to have satisfied the requirements of the Project Co in the manner and to

the extent set out in, Table A in Appendix 1 of Schedule Part 8 (*Review Procedure*);

12.6.3 the Contractor shall allow the Project Co's Representative, at any time, a reasonable opportunity to view any items of Design Data, which shall be made available to the Project Co's Representative as soon as practicable following receipt of any written request from the Project Co's Representative; and

12.6.4 the Contractor shall establish and maintain a computerised design database which Project Co and the Board's Representative may access remotely by computer to view drawings comprised within the Design Data (including Reviewable Design Data) and electronically store and/or print copies of such Design Data. In the event of the Project Co's Representative or the Board's Representative being unable to access such design database, the Contractor shall procure that it is made available for inspection by the Project Co's Representative and by the Board's Representative, or any other person authorised by the Project Co's Representative or the Board's Representative.

Rectification of Project Co's Proposals

12.7 Without prejudice to Clause 12.1, if it should be found that the Project Co's Proposals do not fulfil the Board's Construction Requirements, the Contractor shall at its own expense, and in accordance with Clause 12.8 below, amend the Project Co's Proposals and rectify the Works or any part affected. Such amendment and rectification shall have the effect that:

12.7.1 the Project Co's Proposals shall satisfy the Board's Construction Requirements; and

12.7.2 following the amendment or rectification, the structural, mechanical and electrical performance of the Works will be of an equivalent standard of performance to that set out in the Project Co's Proposals prior to their amendment or rectification (for the purpose of this comparison disregarding the fault which required the amendment or rectification to be made).

12.8 Where Clause 12.7 applies, the Contractor shall submit its proposal for amending the Project Co's Proposals and rectifying the Works (or any part affected) to the Project Co's Representative for review under Schedule Part 8 (*Review Procedure*) and shall not amend the Project Co's Proposals or commence or allow the commencement of the rectification of the Works (or any part affected) until it is permitted to proceed in accordance with Schedule Part 8 (*Review Procedure*).

Construction Skills Certification Scheme

12.9 The Contractor shall ensure that all persons engaged in carrying out the Works (or part thereof) on the Site and/or Off Site are accredited under the Construction Skills Certification Scheme or an equivalent scheme and where the Contractor enters into a Sub-Contract for the purposes of carrying out the Works the Contractor shall cause a term to be included in such sub-contract:

12.9.1 which requires the Sub-Contractor to ensure that such persons are accredited under the Construction Skills Certification Scheme or an equivalent scheme; and

12.9.2 in the same terms as that set out in this Clause 12.9 (including for the avoidance of doubt this Clause 12.9.2) subject only to

modification to refer to the correct designation of the equivalent party as the Contractor and the Sub-Contractor as the case may be.

12A. CDM REGULATIONS (SCOTLAND)

12A.1 During the period of execution of the Works and until delivery of the documents referred to in Clause 12A.3 to the Services Provider in accordance with Clause 12A.3 for the purposes of the CDM Regulations, the Contractor shall act as the Principal Contractor and has been appointed as CDM Co-ordinator. The Project Co shall act as the Client (as such terms are defined in the CDM Regulations) in respect of the Works and undertake the respective duties and obligations required of each such person by the CDM Regulations and in accordance with Schedule Part 6 (*Construction Matters*) (including, for the avoidance of doubt that notice is given to the Executive (as defined in the CDM Regulations) in accordance with regulation 21 of the CDM Regulations).

12A.2 The Contractor warrants to the Project Co that:

(a) it has the competence and capacity to perform the obligations imposed on it by Clause 12A.1 and to conduct its undertaking without contravening any prohibition contained in the CDM Regulations;

(b) it has allocated and will allocate adequate resources to enable it to comply with Clause 12A.1 (and in particular shall make sufficient management arrangements as referred to in regulation 9 of CDM Regulations);

(c) it has the competence, resources and capacity to, and shall, observe, perform and discharge and shall procure the observance, performance and discharge of any code of practice for the time being approved by the Health and Safety Commission pursuant to the Health and Safety at Work etc Act 1974 in connection with the CDM Regulations; and

(d) it has included or shall include in the design all information about aspects of the design of the Works or its construction or maintenance as will adequately assist the Project Co, other designers and other contractors to comply with their duties under the CDM Regulations.

12A.3 As soon as practicable after the Actual Completion Date, the Contractor shall deliver to the Service Provider all records, licences, permission or other documents relating to the relevant completed Works as are required to be maintained by the CDM Regulations. The Contractor shall continue to act as the Principal Contractor and as the CDM Co-ordinator until the Actual Completion Date.

12A.4 The Contractor shall:

(a) procure compliance by the Contractor Parties with the CDM Regulations; and

(b) ensure that the Construction Phase Plan (as defined in the CDM Regulations) is in place prior to commencement of the Works.

13. RIGHT OF ACCESS OF PROJECT CO'S REPRESENTATIVE, THE FUNDERS' TECHNICAL ADVISER, THE INDEPENDENT TESTER AND THE BOARD'S REPRESENTATIVE

Access to the Site and Off-Site

13.1 Without prejudice to Clause 9 *(Nature of Land Interests)*, Schedule Part 31 *(Consort Interface with Campus Site and/or Campus Facilities)* of the Project Agreement and/or the Interface Proposals, the Contractor shall procure that:

13.1.1 subject to complying with all relevant safety procedures, which shall include any relevant construction phase plans and health and safety plans for the construction of the Works the Contractor's Site Rules from time to time and any reasonable directions with regard to site safety that may be issued by or on behalf of the Contractor's Site Manager from time to time, the Project Co's Representative, the Funders' Technical Adviser, the Independent Tester, the Board's Representative and any other parties authorised by the Project Co's Representative shall have unrestricted access at all reasonable times during normal working hours to:

(a) view the Works at the Site and Off-Site on reasonable prior notice appropriate to the circumstances, provided that the notice procedures in this Clause 13.1.1(a) shall not apply to the right of access for the Project Co's Representative, the Funders' Technical Adviser, the Independent Tester and the Board's Representative and their respective staff and visitors to the office and other facilities provided at the Site and Off-Site for his use; and

(b) subject to obtaining the consent of the relevant manufacturer or supplier (which the Contractor agrees to use all reasonable endeavours to obtain), visit any site or workshop where materials, plant or equipment are being manufactured, prepared or stored for use in the Works for the purposes of general inspection and of attending any test or investigation being carried out in respect of the Works;

13.1.2 the Project Co's Representative, the Funders Technical Adviser, the Independent Tester, the Board's Representative and any other person nominated by the Project Co shall have such rights of access to the Site and/or Off-Site in an emergency as any of them (acting reasonably) considers suitable in the circumstances; and

13.1.3 monthly progress meetings and site meetings are held and that the Project Co's Representative, the Funders Technical Adviser, the Independent Tester, the Board's Representative and any other person nominated by the Project Co shall have the right to attend such monthly progress meetings and site meetings and to attend such other meetings as the Project Co's Representative, the Funders Technical Adviser, the Independent Tester and the Board's Representative may reasonably request.

Increased monitoring

13.2 If, following any viewing, visit or inspection made pursuant to Clause 13.1.1, it is discovered that there are defects in the Works or that the Contractor has failed to comply with the Board's Construction Requirements or the relevant Project Co's Proposals, the Project Co's Representative may (without prejudice to any other

right or remedy available to the Project Co) by notice to the Contractor increase the level of monitoring of the Contractor until such time as the Contractor shall have demonstrated to the satisfaction of the Project Co that it is capable of performing and will perform all its obligations to the Project Co under this Agreement. The Contractor shall compensate the Project Co for any reasonable additional costs incurred as a result of such increased monitoring including any reasonable costs for which the Project Co is obliged to compensate the Board under this Project Agreement.

Right to Open Up

13.3 Subject to Clause 13.4, the Project Co's Representative (either on its own motion or at the request of the Board) shall have the right at any time prior to the Actual Completion Date to request the Contractor to open up and inspect any part or parts of the Works where the Project Co's Representative reasonably believes that such part or parts of the Works is or are defective and the Contractor shall comply with such request.

13.4 Prior to exercising his right pursuant to Clause 13.3 above, the Project Co's Representative shall notify the Contractor of his intention to exercise such right, setting out detailed reasons.

13.5 If, following the exercise by the Project Co's Representative of his right pursuant to Clause 13.3, the inspection shows that the relevant part or parts of the Works are not defective then Clause 29.3.4 shall apply.

13.6 If, following the exercise by the Project Co's Representative of his right pursuant to Clause 13.3, the inspection shows that the relevant part or parts of the Works is or are defective, the Contractor shall rectify and make good such Defect(s) and any consequence of such rectification and/or making good Defect(s) shall be carried out by the Contractor at no cost to the Project Co and the Contractor shall not be entitled to any extension of time in relation to such rectification and making good of the Works.

13.7 If, following the exercise by the Project Co's Representative of his right pursuant to Clause 13.3, the Project Co's Representative is of the opinion that the inspection shows that the relevant part or parts of the Works is or are defective and the Contractor does not agree with such opinion, the matter shall be determined in accordance with Schedule Part 20 (*Dispute Resolution Procedure*).

13.8 Without prejudice to the rights of the Project Co's Representative pursuant to this Clause 13 (*Right of Access of Project Co's Representative, the Funders' Technical Adviser, the Independent Tester and the Board's Representative*) the parties acknowledge that the exercise of such rights shall not in any way affect the obligations of the Contractor under this Agreement save as expressly set out in this Clause 13 (*Right of Access of Project Co's Representative, the Funders' Technical Adviser, the Independent Tester and the Board's Representative*).

Safety during Construction

13.9 The provisions of Section 2 (*Safety during Construction*) of Schedule Part 6 (*Construction Matters*) shall apply to matters of safety.

13A. PROJECT CO'S RIGHT TO STOP CONSTRUCTION OPERATIONS DURING THE CONSTRUCTION PHASE

13A.1 The Project Co's Representative shall have the right at any time during the Construction Phase to verbally or in writing instruct the Contractor to stop the relevant part or parts of the Construction Operations and to allow the Project Co Representative, the Funders' Technical Adviser, the Independent Tester, the Board's

Representative and any other person nominated by the Project Co to inspect the relevant part or parts of the Construction Operations if:

13A.1.1 the Project Co's Representative reasonably believes, or is informed by the Board's Representative that he reasonably believes that, a Stop Incident has occurred.

13A.1.2 the Project Co's Representative reasonably believes that, or is informed by the Board's Representative that he reasonably believes that, the carrying out of the relevant part or parts of the Construction Operations has or is likely to have a potentially adverse impact upon the Clinical Services at the Facilities and/or the clinical services at the RIE Facilities; or

13A.1.3 there is an occurrence of a Major Incident.

13A.2 In the event that the Contractor receives an instruction from the Project Co's Representative to stop the relevant part or parts of the Construction Operations pursuant to Clause 13A.1, then the Contractor shall immediately stop the relevant part or parts of the Construction Operations until such time as:

13A.2.1 in the case of Clause 13A.1.1, the Contractor has confirmed to the Project Co its proposals for ensuring that the relevant breach is remedied and that the Contractor is able to re-start the relevant part or parts of Construction Operations in accordance with such proposals as soon possible, provided that the Project Co's Representative is satisfied (acting reasonably) with such proposals;

13A.2.2 in any case pursuant to Clause 13A.1, the Contractor receives an instruction from the Project Co's Representative pursuant to Clause 13A.6 below to re-start the relevant part or parts of the Construction Operations as soon as possible.

13A.3 If following the exercise by the Project Co's Representative of his right to stop the relevant part or parts of the Construction Operations pursuant to:

13A.3.1 Clause 13A.1.1, it is agreed or determined under the Dispute Resolution Procedure that the breach which the Project Co's Representative considers has given rise to a Stop Incident has not occurred, then Clause 29.3.9 *(Delay Events)* shall apply;

13A.3.2 Clause 13A.1.2, then Clause 29.3.10 *(Delay Events)* shall apply;

13A.3.3 Clause 13A.1.3, then Clause 29.3.11 *(Delay Events)* shall apply.

13A.4 If following the exercise by the Project Co's Representative of his rights pursuant to Clause 13A.1.1, the inspection shows that one or more Stop Incident(s) have occurred, the Contractor shall rectify and make good such Stop Incident(s) and any consequence of such rectification and/or making good such Stop Incident(s) shall be carried out by the Contractor at no cost to the Project Co and the Contractor shall not be entitled to any extension of time in relation to such rectification and making good of such Stop Incident(s).

13A.5 If following the exercise by the Project Co's Representative of his right pursuant to Clause 13A.1.1 the Project Co's Representative is of the opinion that the inspection shows that one or more Stop Incident(s) have occurred and the Contractor does not agree with such opinion, the matter shall be determined in accordance with Schedule Part 20 (*Dispute Resolution Procedure*).

13A.6 Without prejudice to Clause 13A.7, following the exercise of the Project Co's Representative of his rights pursuant to Clause 13A.1, the Project Co's Representative shall have the right to instruct the Contractor to re-start the relevant part or parts of the Construction Operations.

13A.7 Without prejudice to the rights of the Project Co's Representative pursuant to this Clause 13A *(Project Co's Right to Stop Construction Operations During the Construction Phase)* the parties acknowledge that the exercise of such rights shall not in any way affect the obligations of the Contractor under this Agreement save as expressly set out in this Clause 13A *(Project Co's Right to Stop Construction Operations During the Construction Phase).*

13A.8 The Project Co's Representative shall provide Contractor with written reasons for any verbal instruction (or for any written instruction where such written instruction did not contain written reasons) to stop the relevant part or parts of the Construction Operations pursuant to Clause 13A.1 within five (5) Business Days of any such verbal instruction.

13A.9 The Contractor shall maintain an up-to-date Stop Log Book for each instruction of the Project Co's Representative to stop the relevant part or parts of the Construction Operations pursuant to Clause 13A.1, which shall set out:

13A.9.1 the date and time when the Project Co's Representative issued a verbal or written instruction to stop the relevant part or parts of the Construction Operations pursuant to Clause 13A.1 and the date and time when the relevant part or parts of the Construction Operations were re-started by the Contractor pursuant to Clause 13A.2;

13A.9.2 the written reasons of the Project Co's Representative in respect of any instruction to stop the relevant part or parts of the Construction Operations, together with the reasons of the Contractor for re-starting the relevant part or parts of the Construction Operations, with such Stop Log Book being updated by the Contractor within two (2) Business Days of receipt of the Project Co's Representative's written reasons pursuant to Clause 13A.8;

13A.9.3 Any of the Project Co's Representative and the Board's Representative shall be able to access the Stop Log Book upon written request to the Contractor, and the Contractor shall provide such access to the Project Co and the Board within two (2) Business Days of receipt of any such request.

14. PROGRAMME AND DATES FOR COMPLETION

Dates for Completion

14.1 The Contractor shall complete the Works by the Completion Date.

The Programme

14.2 Any Programme submitted in accordance with the provisions set out below shall be prepared in accordance with Good Industry Practice and shall be in sufficient detail so as to enable the Project Co's Representative to monitor the progress including all commissioning activities and likely future progress of the Works.

14.3 The initial Programme is set out at Schedule Part 7 (*The Programme*). Any change to the Programme shall only be made in accordance with this Clause 14 (*Programme and Dates for Completion*) and Schedule Part 8 (*Review Procedure*). The Contractor shall promptly submit to the Project Co's Representative a copy of

any version of the Programme varied in accordance with this Clause 14 (*Programme and Dates for Completion*) and Schedule Part 8 (*Review Procedure*).

14.4 If it appears to the Project Co's Representative or the Funders' Technical Adviser at any time that the actual progress of the Works has significantly fallen behind the Programme, then the Project Co's Representative or the Funders' Technical Adviser shall be entitled to require the Contractor to submit to the Project Co's Representative within twenty (20) Business Days a report identifying the reasons for the delay and, unless the event causing the delay is still subsisting and it is not possible to predict with any certainty when the delay might come to an end, require the Contractor (at the Project Co's option):

14.4.1 to produce and submit to the Project Co's Representative and the Funders' Technical Adviser for approval in accordance with Schedule Part 8 (*Review Procedure*) a revised Programme showing the manner and the periods in which the Works will be carried out to ensure completion; and/or

14.4.2 to produce and submit to the Project Co's Representative and the Funders' Technical Adviser for approval in accordance with Schedule Part 8 (*Review Procedure*) a revised Programme showing the steps which are to be taken to eliminate or reduce the delay.

14.4A Not later than ten (10) Business Days after the start of the twenty Business Day period referred to in Clause 14.4, the Contractor shall provide to the Project Co and the Funders' Technical Adviser a draft of the report and the revised programme referred to in Clause 14.4 and shall, if required by the Project Co, meet with the Project Co, its advisers and the Funders' Technical Adviser to disucss the draft report and the draft revised Programme.

14.4B Not later than fifteen (15) Business Days from the date on which the Contractor submits the report and the revised Programme pursuant to Clause 14.4, Project Co shall either approve, or reject, the report and the revised Programme.

14.5 Where the Board Representative exercises its rights under Clause 14.4 of the Project Agreement, the Contractor shall provide the Project Co with all information and other assistance that it requires to comply with Clause 14.4 of the Project Agreement and, to the extent instructed by the Project Co, shall comply with Clause 14.4 of the Project Agreement on behalf of the Project Co.

Early completion

14.6 The Contractor shall notify the Project Co's Representative if at any time the actual progress of the Works is significantly ahead of Programme so that the Contractor anticipates that the Actual Completion Date will be earlier than the Completion Date. The Project Co's Representative shall be entitled to require the Contractor to produce and submit to the Project Co's Representative in accordance with Schedule Part 8 (*Review Procedure*)a revised Programme showing the manner and the periods in which the Works will be carried out and what the revised date for the Works would be to enable the Board and the Project Co, pursuant to Clause 14.5 of the Project Agreement to consider:

14.6.1 whether to agree an earlier Completion Date; and

14.6.2 what modifications (if any) will be required to the Project Agreement in order to accommodate such earlier date as the agreed Completion Date. The Contractor shall provide the Project Co with all information and other assistance that it requires to comply with the Project Co's obligations under Clause 14.5 of the Project

Agreement provided always that the Project Co (only where it has the discretion to agree or otherwise under the Project Agreement) shall not agree any earlier Completion Date with the Board under Clause 14.5 of the Project Agreement without prior agreement with the Contractor (not be unreasonably withheld or delayed). To the extent that an earlier date for completion and any modifications are required to the Project Agreement to accommodate such earlier date for completion, this Agreement shall be amended, mutatis mutandis.

14.6A Where the Project Co's Representative requires the Contractor to produce a revised Programme pursuant to Clause 14.6, the Project Co shall provide to the Contractor an estimate of the Deductions that would be set against Early Income for the purposes of Clause 14.7 (*Early Completion Bonus*) if the Actual Completion Date occurs on the revised date for completion shown in the revised Programme.

Early Completion Bonus

14.7 Where the Actual Completion Date has occurred prior to the Completion Date, and subject to the other provisions of this Clause 14.7, the Contractor shall be entitled to submit an invoice for the Early Completion Bonus after the Early Completion Bonus Calculation Date and the Project Co shall pay to the Contractor the Early Completion Bonus not later than twenty (20) Business Days after receipt of the Contractor's invoice the Early Completion Bonus Calculation Date.

14.8 Notwithstanding anything else in this Clause 14.7, the maximum Early Completion Bonus to which the Contractor may become entitled shall not exceed the Surplus (if any) for the three month preceding the Completion Date.

14.9 The Project Co shall calculate the Surplus promptly following receipt of the Early Income and calculation of the Deductions, whichever occurs later and shall notify the Contractor of the Surplus.

14.10 Payment of the Early Completion Bonus is without prejudice to the Project Co's right under this Agreement including under Clause 34.27 (*Set-Off*) in respect of the sums payable by the Contractor in accordance with this Agreement.

Deductions shall mean for the period between the Actual Completion Date and the Completion Date the aggregate of costs and expenses of the Project Co associated with the Project including all operation and maintenance costs (excluding payments made to the Service Provider pursuant to item 23, Schedule 2 to the Interface Agreement) other lifecycle costs, debt service costs including funding of reserve accounts, tax provisioning, sums due to equity investors in the Project Co and any surplus payment due to the Board;

Early Completion Bonus shall mean an amount equal to 50% of the Surplus plus the amounts payable by the Contractor to the Service Provider pursuant to item 23 of Schedule 2 to the Interface Agreement;

Early Completion Bonus Calculation Date shall mean the date on which the Project Co calculates the Surplus;

Early Income shall mean the payment actually received by the Project Co under the Project Agreement for the period between the Actual Completion Date and the Completion Date which the Project Co would not have received but for the occurrence of the Actual Completion Date prior to the Completion Date, and

Surplus shall mean the Early Income less the Deductions less the payments made by the Contractor to the Services Provider pursuant to item 23 of Schedule 2 to the Interface Agreement.

15. INDEPENDENT TESTER

Appointment

15.1 The Project Co, the Board and the Contractor have on or prior to the date of this Agreement, in compliance with all Law relating to procurement which is applicable to any party, appointed a suitably qualified and experienced consultant to act as the Independent Tester for the purposes of this Agreement upon the terms of the Independent Tester Contract.

15.2 The Project Co shall not permit any material variation to the Independent Tester Contract without the Contractor's prior approval (not to be unreasonably withheld or delayed).

15.3 Each of the Project Co, the Board and the Contractor shall comply with and fulfil their respective duties and obligations arising under or in connection with the Independent Tester Contract.

Co-operation

15.4 The Contractor shall co-operate with the Independent Tester in the discharge by the Independent Tester of its duties under the Independent Tester Contract.

Replacement

15.5 The Project Co shall consult with the Contractor in respect of any change to the identity of the Independent Tester or change to the Independent Tester Contract under and in accordance with the Project Agreement and (only where the Project Co has the discretion to agree or otherwise under the Project Agreement) provided that the Contractor shall act within any time constraints imposed by the Project Agreement.

15.6 If the Contractor believes that it has incurred a liability to the Project Co under this Agreement or has otherwise suffered a loss arising from a breach by the Independent Tester of the Independent Tester Contract, upon written request being given by the Contractor to the Project Co, the Project Co shall assign all or part of any right (as determined by the Project Co, acting reasonably) the Project Co may have against the Independent Tester under the Independent Tester Contract to enable the Contractor to pursue a claim against the Independent Tester. Any assignation under this Clause shall be made in writing and notice of such assignation shall be promptly served upon the Independent Tester.

16. EQUIPMENT

The provisions of Schedule Part 11 (*Equipment*) shall apply in respect of Equipment.

17. PRE-COMPLETION COMMISSIONING AND COMPLETION

17.1 Not less than eight (8) months before the Completion Date, the Project Co shall provide the Contractor with a draft of the Final Commissioning Programme as jointly developed by the Board and the Project Co in accordance with the provisions of Clause 17.2 and 17.3 of the Project Agreement. The Contractor shall provide the Project Co with comments on the draft Final Commissioning Programme submitted to it within fifteen (15) Business Days. The parties shall, within fifteen (15) Business Days of receipt by the Project Co of the Contractor's comments agree the terms of the Final Commissioning Programme provided that

the Project Co may by prior notice to the Contractor change the scope and time of the Board's Commissioning and subject to Clause 75 (*Overriding Entitlements*) the Project Co shall reimburse the Contractor its reasonable costs incurred as a result of such change in scope or time. If the parties are unable to agree the Final Commissioning Programme or the change in scope or time of the Board's Commissioning within three (3) months of the date when the draft of the Financial Commissioning Programme was provided to the Project Co, the matter shall be referred for determination in accordance with Schedule Part 20 (*Dispute Resolution Procedure*).

17.2 The Contractor shall assist the Project Co in the development of the Final Commissioning Programme in accordance with Clauses 17.3 and 17.4 of the Project Agreement and shall provide the Project Co with its proposals and recommendations and all supporting documentation as the Project Co shall reasonably require in connection with such obligations.

17.3 The Final Commissioning Programme shall be in accordance with the Outline Commissioning Programme and shall impose no greater or more onerous obligations on the Board than those set out in the Outline Commissioning Programme (unless otherwise agreed by the Board in its absolute discretion). The Final Commissioning Programme shall then replace the Outline Commissioning Programme.

17.4 The Final Commissioning Programme shall describe the steps necessary, the party responsible for taking each of such steps and the timing and sequence of each of such steps to ensure:

17.4.1 that the Contractor's Pre-Completion Commissioning and the Board's Commissioning will not delay the Actual Completion Date from occurring by the Completion Date; and

17.4.2 that Project Co's Post Completion Commissioning and the Board's Post Completion Commissioning are completed by the Commissioning End Date.

17.5 The Contractor shall procure that the steps that it is responsible for carrying out and completing pursuant to the Final Commissioning Programme include, in the case of Contractor's activities, the activities described at paragraph 4.5.17 of the Board's Construction Requirements.

17.6 The Contractor shall notify the Independent Tester and the Project Co's Representative of the date when the Contractor (acting reasonably) considers that the Works will be complete in accordance with the Board's Construction Requirements, the Completion Criteria and this Agreement not less than three (3) months and one week prior to such anticipated completion. Such notification shall trigger the activities of the Independent Tester under this Clause.

17.7 Without prejudice to Clause 15.4 the parties each undertake to co-operate with the Independent Tester to ensure that the Independent Tester is familiar with all necessary aspects of the Project for the purposes of its role as described in Clause 17 of the Project Agreement.

Commissioning prior to Completion Date

17.8 The Contractor shall:

17.8.1 undertake the Contractor's Pre-Completion Commissioning in accordance with the Final Commissioning Programme; and

17.8.2 permit the Board or other persons on behalf of the Board to undertake the Board's Commissioning including permitting specialist contractors engaged by the Board to deliver and install equipment on such dates as agreed between the Project Co and the Contractor, in accordance with the Final Commissioning Programme,

and the Project Co shall procure that the Board's Commissioning in accordance with the Final Commissioning Programme shall not cause material damage to the Works.

17.9 The Contractor shall give written notice to the Independent Tester, the Funders' Technical Adviser and the Board of the commencement of the Pre-Completion Commissioning for which the Contractor is responsible and shall ensure that the Project Co Representative, Independent Tester, the Funder's Technical Adviser and the Board's Representative are invited to witness all of, and are provided with all information they may reasonably require in relation to, the Pre-Completion Commissioning for which the Contractor is responsible and that the Independent Tester is invited to comment on Pre-Completion Commissioning for which the Contractor is responsible.

17.10 The Contractor shall, give the Board access to the Works at such times as may be set out in the Final Commissioning Programme to enable the Board to undertake the Board's Commissioning in accordance with the Final Commissioning Programme for the period prior to completion. When exercising such rights the Board shall comply with all relevant safety procedures, which shall include any relevant construction phase plans and health and safety plans for the construction of the Works, the Contractor's Site Rules from time to time and any reasonable directions with regard to site safety that may be issued by or on behalf of the Contractor's Site Manager from time to time.

Pre-Completion inspection

17.11 Without prejudice to the notice periods in respect of the Works which are set out in Schedule Part 31 *(Consort Interface with Campus Site and/or Campus Facilities)* of the Project Agreement in respect of which notice of completion is to be given by the Contractor, the Contractor shall in addition give the Project Co Representative, the Independent Tester, the Funders Technical Adviser and the Board's Representative not less than twenty-two (22) Business Days' notice and not more than twenty-eight (28) Business Days' notice of the date upon which the Contractor considers that the Works will be complete and the tests on completion required to be performed in accordance with the Final Commissioning Programme will be carried out. Following receipt of the notice specified in this Clause 17.11 (*Pre-Completion inspection*) each of the Project Co's Representative, the Board's Representative, the Funders' Technical Adviser and the Independent Tester shall be entitled to inspect the Works on the date or dates reasonably specified by the Contractor in accordance with this Clause 17.11 (*Pre-Completion inspection*), and to attend any of the tests on completion. The Contractor shall, if so requested, accompany the Project Co's Representative, the Board's Representative, the Funders' Technical Adviser and the Independent Tester on any such inspection.

Pre-Completion matters

17.12 The Project Co shall procure that the Independent Tester, within seven (7) Business Days of any inspection made pursuant to Clause 17.11 (*Pre-Completion inspection*), notifies the Contractor's Representative of any outstanding matters (including, without limitation, the repetition of any of the tests on completion which are required to be carried out and passed in accordance with the Final Commissioning Programme) which are required to be attended to before the Works can be considered to be complete in accordance with the Board's

Construction Requirements, Project Co's Proposals and the Completion Criteria. The Contractor shall attend to such matters and shall, if necessary, give further notices in accordance with Clause 17.11 (*Pre-Completion inspection*) (but dealing only with matters raised in the notification under this Clause 17.12 (*Pre-Completion matters*)) so that the procedures in Clause 17.11 (*Pre-Completion inspection*) and this Clause 17.12 (*Pre-Completion matters*) are repeated as often as may be necessary to ensure that all outstanding matters in relation to the Works are attended to.

Completion Certificate

17.13 Subject to Clause 17.18, it is acknowledged that pursuant to Clause 17.12 of the Project Agreement, the Project Co and the Board shall procure that the Independent Tester, when he is satisfied that the Works are complete in accordance with the Completion Criteria, issues a Certificate of Practical Completion to that effect.

17.14 Without prejudice to Clauses 17.14 and 17.17, the issue of the Certificate of Practical Completion shall, in the absence of manifest error, bad faith or fraud, be conclusive evidence that the Actual Completion Date has occurred but only for the purpose of ascertaining that the Works were complete in accordance with the Completion Criteria, on the date stated in the Certificate of Practical Completion.

17.15 The Independent Tester shall issue the Certificate of Practical Completion notwithstanding that there are Snagging Matters. Where there are Snagging Matters, the Project Co shall procure that the Independent Tester shall, within twelve (12) Business Days of the date of issue of the Certificate of Practical Completion, issue a Snagging Notice which shall specify the Snagging Matters and an estimate of the cost of rectifying such Snagging Matters.

17.16 Within eight (8) Business Days of the date of issue of a Snagging Notice, the Contractor shall, in consultation with the Project Co's Representative and in such manner as to cause as little disruption as reasonably practicable to the Board's Post Completion Commissioning and the Board's use of the Facilities and the Retained Estate Handback Infrastructure and the Retained Estate, rectify all Snagging Matters.

17.17 If, within eight (8) Business Days of the issue of the Snagging Notice, the Contractor has failed to rectify the Snagging Matters specified in the Snagging Notice the Project Co may by itself (or engage others to) carry out the works necessary to rectify the Snagging Matters, at the risk and cost of the Contractor.

17.18 The issue of the Certificate of Practical Completion shall in no way affect the obligations of Contractor under this Agreement including in respect of any Defects.

17.19 Without derogating from the Contractor's obligation to satisfy the Completion Criteria as a pre-condition to the issue of a Certificate of Practical Completion the Contractor's right to receive any certificate envisaged under Clause 17.13 is subject always to Clause 75 (*Overriding Entitlements*) and accordingly the Contractor is not entitled to receive any certificate envisaged under Clause 17.13 unless the Project Co has received the corresponding certificate to be issued in accordance with the Project Agreement.

As-built specification

17.20 Within eight (8) Business Days, after the issue of the Certificate of Practical Completion, the Contractor shall provide to the Project Co four (4) hard copies and one (1) electronic copy of the As-Built Building Specification, together with all drawings relating to the Works.

17A. DEFECTS AND REMEDIAL WORKS

17A.1 The Project Co shall notify the Contractor in writing of any Defects and any damage appearing in the Works (referred to in this Clause 17A as "**relevant damage**") arising during the Defects Liability Period. It is acknowledged and agreed by the Contractor that the section of pipe between manhole MHF3 and manhole MHFX shown on Plan 12 in Schedule Part 27 of the Project Agreement shall be deemed to be part of the Works that have been executed by the Contractor pursuant to this Agreement and shall be subject to this Clause 17A and to Clause 54A.5. Each notice issued under this Clause 17A.1 shall state the nature of the Defect and relevant damage and may state the work which, in the Project Co's opinion, is required to repair or remedy the Defect and relevant damage.

17A.2 Subject to Clause 17A.3, the Contractor shall make good all Defects and relevant damage notified in accordance with Clause 17A.1:

(a) to the standards required by this Agreement (determined by reference to the Board's Construction Requirements and Project Co's Proposals);

(b) in accordance with a programme and method of working previously approved by Project Co;

(c) so as to avoid (i) deductions from the amounts payable to the Project Co under the Project Agreement and (ii) disruption and inconvenience to the Board, the Project Co and permitted occupiers of the relevant Facilities; and

(d) at no cost to the Project Co unless the Project Co shall otherwise instruct and if the Project Co does otherwise instruct then an appropriate deduction in respect of any such Defects and relevant damage not made good shall be made from the Contract Sum.

17A.3 Where, in the reasonable opinion of the Project Co, following consultation with the Contractor and the Service Provider, the works necessary to make good a Defect and relevant damage or any part of them are of a nature which it is more appropriate for the Service Provider to undertake (having regard to all the circumstances including, but without limitation, the nature of such Defects and relevant damage, the overall impact on the Project Operations, the cost to the parties and other relevant matters), they shall be undertaken by the Service Provider and the Contractor shall compensate the Service Provider for the cost of such works pursuant to the Interface Agreement.

17A.4 The Contractor shall reimburse the Project Co for all Direct Losses as a result of any Defects or relevant damage and making good thereof whether such Direct Losses arose before or after notification of the relevant Defect and relevant damage in accordance with Clause 17A.1. The Project Co shall take reasonable steps to mitigate any Direct Losses caused by Defects or relevant damage or the making good thereof which the Contractor is liable for pursuant to Clause 17A.4.

17A.5 If the Contractor shall fail to carry out any works which may be required under this Clause 17A (*Defects and Remedial Works*), the Project Co may do or have the work done at the Contractor's risk and expense without prejudice to any other rights which the Project Co may have against the Contractor in respect of the failure of the Contractor to carry out such works.

17A.6 [Not Used]

17A.7 If the Board reduces its payments under the Project Agreement for Services (including any indemnity which the Board sets off against the Project Co) because of shortfalls in availability and/or performance or otherwise reduces, withholds or avoids payment to the Project Co or claims any amount from the Project Co (a **"Project Agreement Claim"**), the Project Co or a person acting for the Project Co may notify the Contractor of the proportion of the Project Agreement Claim (the **"Reduction Amount"**) which the Project Co determines to be attributable to the Contractor's failure to meet its obligations under this Agreement or the rectification of Defects and Snagging Matters (including the Contractor's compliance with its obligations under Clauses 17A.2 and 17.15 or the exercise of the Project Co's rights under Clause 17A.5 or clause 17.16. The Contractor shall pay the Reduction Amount subject to and in accordance with the Interface Agreement.

17A.8 The Contractor's licence granted in accordance with Clause 9.2 (*Access Following Construction*) shall be subject to:

(a) the Contractor's compliance with all reasonable requirements, rules and conditions stipulated by the Service Provider and described in the Interface Agreement;

(b) the Contractor using all reasonable efforts not to hinder, impede or prevent any of the Project Co, the Service Provider or the Independent Tester from carrying out their respective obligations.

17A.9 On the expiry of the Defects Liability Period and when all Defects and relevant damage which the Project Co has notified to the Contractor pursuant to Clause 17A.1 have been made good, the Project Co's Representative shall issue a certificate to that effect which certificate shall not be unreasonably withheld or delayed and completion of making good defects shall be deemed for all purposes of this Agreement to have taken on place on the date named in such certificate (the **"Certificate of Making Good Defects"**). The issue of a Certificate of Making Good Defects shall in no way affect the rights of the Project Co or the obligations of the Contractor under this Agreement including in respect of Defects.

17B. LIQUIDATED DAMAGES

17B.1 If the Actual Completion Date is later than the Completion Date the Project Co shall issue a notice in writing to the Contractor to that effect. In the event of a new Completion Date being fixed after the issue of such a notice in writing such fixing shall cancel that notice and the Project Co shall issue such further notice in writing under this Clause 17B.1 as may be necessary.

17B.2 Provided that the Project Co has issued notice under Clause 17B.1, then the Project Co may either:

(a) require the Contractor by Notice in Writing to Pay to the Project Co, on the Dates Specified in Such Notice, Liquidated Damages at the Rate Stated in Schedule Part 33 (*Liquidated Damages*) for the period between the Completion Date and the Actual Completion Date and the Project Co may recover the same as a debt; or

(b) give a notice to the Contractor pursuant to Clause 34.11 or 34.25.2 that it will deduct from monies due to the Contractor liquidated damages at the rate stated in Schedule Part 33 (*Liquidated Damages*) for the period from the Completion Date and the Actual Completion Date,

provided always that the Contractor shall not be liable to pay or allow a deduction in respect of liquidated damages under this Clause 17B, in excess of the Liquidated Damages Cap.

17B.3 The Project Co and the Contractor agree that any amounts payable under Clause 17B shall be paid as liquidated damages and represent a genuine pre-estimate of the Project Co's reasonable loss in respect of delay in completion of the Works.

17B.4 The Project Co acknowledges that, without prejudice to (i) the Project Co's right to claim for breach of any provision other than Clause 14 (*Programme and Dates for Completion*), (ii) the Project Co's entitlement pursuant to clauses 30.10 (*Relief Events*) and 31.8A (*Force Majeure Liquidated Damages*); and (iii) the Project Co's rights to terminate this Agreement in its entirety or as to part under Clause 40 (*Contractor Event of Default*), and to make any claims for damages, compensations or other reliefs and to receive any other payments following such termination, subject to Clause 17B.5:

(a) the right to liquidated damages under this Clause 17B represents the Project Co's sole remedy against the Contactor in respect of the late completion of the Works; and

(b) upon the Project Co's receipt of the liquidated damages payable by the Contractor under Clause 17B the Contractor's liability for late completion of the Works shall be fully and finally satisfied.

17B.5 If the liquidated damages referred to in this Clause 17B shall be declared invalid, void, unenforceable and/or illegal by the courts of any jurisdiction to which this Agreement is subject, the Project Co shall be entitled to recover all damages, losses, costs and expenses incurred or suffered, as general damages, instead of such liquidated damages, provided always that the Contractor's liability to pay such general damages shall not exceed (either on a daily or aggregate basis) the amount that would have been payable as stated in Schedule Part 33 (*Liquidated Damages*) in respect of the same period of delay.

17B.6 The Project Co shall use reasonable endeavours to recover any sums covered by the delay in start up insurance maintained in accordance with paragraph 2 of Schedule Part 15 (*Insurance Requirements*). If and to the extent that the Project Co recovers sums in respect of delay in circumstances where the Contractor has paid liquidated damages in accordance with this Clause 17B in respect of any such period of delay, the Project Co will pay such sums to the Contractor within 5 Business Days of receipt of such insurance proceeds. The part of the Liquidated Damages Cap that has been eroded by the delay liquidated damages paid by the Contractor shall be refreshed by an amount equal to the amount paid to the Contractor pursuant to this Clause 17B.6.

18. POST COMPLETION COMMISSIONING

Commissioning

18.1 The Contractor acknowledges that pursuant to Clause 18.1 of the Project Agreement, the Project Co and the Board shall respectively undertake and complete the Project Co's Post-Completion Commissioning and the Board's Post Completion Commissioning, in accordance with the Final Commissioning Programme. The Contractor shall, at all times, and in particular in the period between the Actual Completion Date and the Actual Commissioning End Date, use reasonable endeavours to assist the Board and the Project Co to ensure compliance with their obligations in respect of the Final Commissioning Programme.

Information

18.2 The Contractor shall ensure that the Project Co's Representative is provided with all the information he may reasonably require in relation to the Project Co's Post-Completion Commissioning.

18.3 [Not Used]

18.4 On the completion of the Project Co's Post-Completion Commissioning the Independent Tester shall issue the Commissioning Completion Certificate in respect thereof.

Operational Manuals

18.5 The Contractor shall make available on the Site to the Project Co's Representative:

18.5.1 at least twenty five (25) weeks prior to the anticipated Actual Completion Date, one (1) electronic copy and four (4) hard copies of a draft operation and maintenance manual in sufficient detail to allow the Project Co to plan for the safe and efficient operation of the Works;

18.5.2 on or before the Actual Completion Date one (1) electronic copy and four (4) hard copies of a final draft operation and maintenance manual in sufficient detail to allow the safe and efficient operation and use the Works;

18.5.3 within eight (8) Business Days following the Actual Completion Date, the principal operation and maintenance manual;

in each case including all manufacturers' instructions relating to Equipment installed by or on behalf of the Contractor.

18.6 The Contractor shall provide to the Project Co such information after the Actual Completion Date as relates to any Snagging Matters or rectification of Defects as is reasonably necessary to allow for the updating of any of the items listed in Clause 18.6.

18.7 On termination of this Agreement (howsoever arising) prior to the provision by the Contractor in accordance with Clause 18.6 of the items listed therein, the Contractor shall within eight (8) Business Days of such termination provide four (4) hard copies and a single electronic copy of any operating and maintenance manual not yet provided (completed as appropriate to the date of termination) to the Project Co.

19. FOSSILS AND ANTIQUITIES

Property

19.1 The Contractor acknowledges and agrees that all fossils, antiquities, and other objects having artistic, historic or monetary value and human remains which may be found on or at the Site and Off-Site are or shall become, upon discovery, the absolute property of the Board.

Discovery

19.2 Upon the discovery of any such item during the course of the Works, the Contractor shall:

19.2.1 immediately notify the Project Co's Representative of such discovery;

19.2.2 take all steps not to disturb the object and, if necessary, cease any Works in so far as the carrying out of such Works would endanger the object or prevent or impede its excavation; and

19.2.3 take all necessary steps to preserve the object in the same position and condition in which it was found.

Action

19.3 Following receipt of notice from the Contractor the Project Co shall procure that the Project Co's Representative promptly, and in any event within twelve (12) Business Days of receipt of notice pursuant to Clause 19.2.1, issues an instruction to the Contractor specifying what action the Project Co's Representative requires the Contractor to take in relation to such discovery.

19.4 The Contractor shall promptly and diligently comply with any instruction issued by the Project Co's Representative referred to in Clause 19.3 above (except and to the extent that such instruction constitutes a Change pursuant to Clause 19.6 below in which case the provisions of Schedule Part 16 (*Change Protocol*) shall apply), at its own cost.

19.5 If directed by the Project Co's Representative, the Contractor shall allow representatives of the Board to enter the Site and Off-Site for the purposes of removal or disposal of such discovery provided that such entry shall be subject to the Board complying with all relevant safety procedures, which shall include any relevant construction phase plans and health and safety plans for the construction of the Facilities and the Retained Estate Handback Infrastructure, the Contractor's Site Rules from time to time and any reasonable directions with regard to site safety that may be issued by or on behalf of the Contractor's Site Manager from time to time.

19.6 If, any instruction referred to in Clause 19.3 includes a requirement for the Contractor to carry out works (being any work of alteration, addition, demolition or extension or variation in the Works) which are not works which would be necessary for the purpose of compliance with Law or any Consents, such works shall be deemed to be a Change and the provisions of Schedule Part 16 (*Change Protocol*) shall apply as if such instruction was a Change Notice.

19A. CONSORT INTERFACE WITH CAMPUS SITE AND/OR CAMPUS FACILITIES

The Contractor shall comply with the provisions of Schedule Part 31 *(Consort Interface with Campus Site and/or Campus Facilities)* of the Project Agreement and shall provide and thereafter adhere to all relevant Interface Proposals in relation to such Schedule.

19B. CARE OF THE WORKS

19B.1 The Contractor shall, without prejudice to the other provisions of this Agreement (including the Contractor's rights under Clauses 49 (*Indemnities*) and 76 (*Project Co Breach and Non PA Entitlement Obligations*), bear full risk in and take full responsibility for the care of and risk of loss or damage to the Works and any, materials, goods and equipment for incorporation therein from the Commencement Date until the issue of the Certificate of Practical Completion. Where works, materials, goods and equipment are required to make good any Defect and relevant damage (as that term is defined in Clause 17A (*Defects and Remedial Works*)) or complete any Snagging Matters, the Contractor shall, without prejudice to the other provisions of this Agreement (including the Contractor's rights under Clauses 49 (*Indemnities*) and 76 (*Project Co Breach and Non PA Entitlement Obligations*), bear

full risk in and take full responsibility for the care of such items until completion of the same by the Contractor and shall be responsible for making good such loss or damage at its own cost.

19C. PROPERTY IN GOODS, MATERIALS AND PLANT

19C.1 Upon the Project Co making payment in respect of any goods or materials, the same shall become the absolute property of the Project Co and thereafter shall be in the possession of the Contractor for the sole purpose of delivering them to the Project Co and incorporating them in the Works and shall not be within the ownership, control or disposition of the Contractor provided always that:

(a) any payment in respect of such goods and materials shall be without prejudice to the exercise of any power of the Project Co contained in this Agreement to reject any goods or materials which are not in accordance with the provisions of this Agreement and upon any such rejection the property in the rejected goods or materials shall immediately revest in the Contractor; and

(b) the Contractor shall be responsible for any loss or damage to such goods and materials and for the cost of storing, handling and transporting the same and shall effect or procure such insurance for their full replacement value protecting the interests of the Project Co and the Contractor as may be necessary to cover the risk of such loss or damage; and

(c) if any goods or materials have been incorporated into the Works, such goods and materials shall be deemed to have been paid for by the Project Co for the purposes of this Clause 19C.1

19C.2 The Contractor shall, where entering into any contract with a Contractor Party for the execution of any part of the Works, incorporate in such contract the provisions of Clause 19C (*Property in Goods, Materials and Plant*) in relation to goods and materials brought on to a Site by the Sub-Contractor.

19C.3 Subject to Clause 49 (*Indemnities*), the Project Co shall not at any time be liable for the loss of or damage to any plant, goods, equipment and materials, temporary works or materials for temporary works.

19C.4 Neither the Contractor nor a Contractor Party nor the any other person shall have a lien on any goods or materials which have vested in the Project Co under this Clause 19C (*Property in Goods, Materials and Plant*) for any sum due to the Contractor, any Contractor Party or any other person and the Contractor shall take all such steps as may reasonably be necessary to ensure that the title of the Project Co (and the exclusion of any such lien) are brought to the notice of Contractor Parties and all other persons dealing with any such goods or materials.

19C.5 Upon cessation of the employment of the Contractor under this Agreement before the completion of the Works, the Contractor shall deliver to the Project Co any goods or materials the property in which has vested in the Project Co by virtue of this Clause 19C (*Property in Goods, Materials and Plant*) and if it shall fail to do so the Project Co may enter any premises of the Contractor or of any Contractor Party or of any Sub-Contractor and remove such goods and materials and recover the cost of so doing from the Contractor.

19D. SUBMISSION OF DOCUMENTS

19D.1 Where under any provisions of this Agreement, any documentation, information or other data in connection with the design, construction, testing, commissioning and completion of the Works, or the Contractor's other obligations under this Agreement are required to be submitted by the Contractor to the Board or another person including where the Contractor is required to comply with obligations under the Project Agreement on behalf of the Project Co, the Contractor's Representative shall submit the same (and at the same time provide a copy to Project Co's Representative and such Service Providers as the Project Co may designate) in the manner and within the time (if any) prescribed therefor including, where relevant the requirements of the Project Agreement.

19D.2 Without prejudice to Clause 19D.1, the Contractor shall liaise with and keep the Service Provider informed of its proposals as to matters to be submitted for review in accordance with the Review Procedure of the Project Agreement and shall allow, so far as is practicable, the Service Provider reasonable opportunities to review such proposals and to attend meetings to discuss such proposals prior to submission.

19D.3 Prior to submission of any documentation, information or other data under Clause 19D.1, the Contractor shall:

(a) have due regard to any representations made by the Service Provider in relation to such documentation, information or other data;

(b) take all reasonable steps to accommodate the representations of the Service Provider where such representations do not cause the Contractor to incur any greater overall cost than would be incurred by any reasonable interpretation of the obligations of the Contractor hereunder and provided that the Contractor shall not give effect to any such representations which would place the Contractor in breach of this Agreement;

(c) notify the Service Provider of any representations made by the Service Provider which it does not propose to put into effect in the documentation, information or other data document or data to be submitted under Clause 19D.1.

To the extent that the Contractor accommodates any representations of the Service Provider under this Clause it shall do so at its own risk and the Project Co shall not be liable to the Contractor in that regard.

19E. INSTRUCTIONS

19E.1 Without prejudice to Clauses 4.2 and 4.3 the Contractor shall as soon as reasonably practicable comply with all instructions issued to him by the Project Co in accordance with the terms of this Agreement (save where such instruction will put the Contractor in breach of its obligations under this Agreement provided failure to comply with such instruction will not put the Project Co in breach of its obligations under the Project Agreement or Project Documents) in regard to any matter in respect of which the Project Co is expressly empowered by this Agreement to issue instructions provided that the Project Co shall only be empowered if so required to do so to perform its obligations under the Project Agreement or Project Documents.

19E.2 All instructions issued by the Project Co shall be issued in writing.

19F. REPORTING

19F.1 From the Effective Date until the Actual Completion Date the Contractor shall, as soon as practicable and not later than 8 Business Days after the end of each Month (for the purposes of this Clause 19F, (the "**Relevant Month**"), deliver to the Project Co electronic copies of a report (the "**Construction Report**"), in such form as the Project Co may reasonably require, setting out:

(a) a comparison between:

(a) the progress of construction of the Works during the Relevant Month; and

(b) the progress projected for the Relevant Month in the Programme and the previous Construction Report,

together with an explanation of any material divergence;

(b)

(a) a projection of the progress to be made on a Monthly basis from the end of the Relevant Month until the Actual Completion Date; and

(b) an explanation of any material divergence from the projections contained in the Programme and the previous Construction Report;

(c)

(a) the Contractor's estimate of the anticipated Actual Completion Date; and

(b) an explanation of any material divergence from the estimate(s) of that date set out in the Programme and the previous Construction Report, together with the Contractor's proposals for addressing such divergence;

(d) a comparison between:

(a) the amount actually included in the Application for Interim Payment by the Contractor, broken down using the line items appearing in the breakdown of the Contract Price in Schedule Part 14 (*Contract Sum and Payment Schedule*), in the Relevant Month; and

(b) the amount forecast in the prevous Construction Report to have been included by the Contractor in the Application for Payment in the Relevant Month using the line items appearing in the breakdown of the Contract Price in Schedule Part 14 (Contract Sum and Payment Schedule), together with an explanation in the event that the amount actually included in the Application for Payment in the Relevant Month by the Contractor is less than:

(1) 90 per cent of the cumulative amount that should have been included in the Applications for Payment at that time as set out in the Programme; or

(2) 90 per cent of the amount projected to be included in an Application for Payment by the Contractor during the Relevant Month as set out in the Construction Report prepared in respect of the immediately preceding Month;

(e)

(a) a forecast of the amount to be included in the Applications for Payment by the Contractor using the line items appearing in the breakdown of the Contract Price in Schedule Part 14 (*Contract Sum and Payment Schedule*), in the period from the end of the Relevant Month until the projected Actual Completion Date on a Monthly basis; and

(b) an explanation of any material divergence from the forecast in the previous Construction Report, such explanation to use the line items appearing in the breakdown of the Contract Price in Schedule Part 14 (*Contract Sum and Payment Schedule*) ;

(f) such other information in relation to the construction and commissioning of the Works as the Project Co may from time to time reasonably require including, without limitation:

(a) any breach (or purported breach) of safety or security at the Site, or the Off-Site when the Off-Site is under the control of the Contractor for the purposes of the Construction Operations, including any material health and safety matters, material incidents, claims, lost time, and/or injuries to any person;

(b) any material environmental matters at the Site, or the Off - Site when the Off-Site is under the control of the Contractor for the purposes of the Construction Operations, and any material health and safety matters, material incidents, claims, lost time, and/or injuries to any person; and

(c) any material change to the health and safety framework or policies of, or health and safety procedures of, the Contractor.

(g) Where the Project Co is satisfied (acting reasonably) that the Contractor has provided the information required in a Construction Report in another report submitted by the Contractor to the Project Co pursuant to another term of this Agreement within the time period provided for in Clause 19F.1, the Contractor shall not be obliged to repeat the same information in a Construction Report.

PART 4: QUALITY ASSURANCE

20. QUALITY ASSURANCE

Quality Plans and Systems

20.1 The Contractor shall procure that all aspects of the Construction Operations are the subject of quality management systems in accordance with the provisions of this Clause 20 (*Quality Assurance*).

20.2 The quality management systems referred to in Clause 20.1 above shall be reflected in appropriate quality plans, the standard of which shall be consistent with BS EN ISO 9001 or 9002 (as the case may be) or any equivalent standard which is generally recognised as having replaced them (or either of them).

20.3 Without limitation to the generality of Clause 20.2, there shall be:

20.3.1 a Design Quality Plan; and

20.3.2 a Construction Quality Plan,

20.3.3 [Not Used]

provided that the Design Quality Plan and the Construction Quality Plan may be incorporated into one document.

20.4 The Contractor shall procure that the Construction Operations are carried out in compliance with the Quality Plans. All Quality Plans shall be submitted to the Board's Representative by the Contractor on behalf of the Project Co in accordance with Schedule Part 8 (*Review Procedure*) of the Project Agreement and the Project Co and the Contractor shall not be entitled to implement or procure the implementation of any Quality Plan unless the Project Co is entitled to proceed with such implementation pursuant to Schedule Part 8 (*Review Procedure*).

20.5 The Contractor shall implement the quality management systems referred to in Clause 20.1 and shall implement:

20.5.1 the Design Quality Plan, and

20.5.2 the Construction Quality Plan.

20.5.3 [Not Used]

20.6 Where any aspect of the Construction Operations is performed by a subcontractor, then the provisions of this Clause 20 (*Quality Assurance*) (in so far as relevant or appropriate to the activities to be performed by such subcontractor) shall apply in respect of each of such subcontractors, and references in this Clause 20 (*Quality Assurance*) to the "**Contractor**" shall be construed accordingly. To avoid doubt, this Clause shall not be construed as requiring subcontractors of the Contractor to have their own quality plans but only to comply with the Design Quality Plan and the Construction Quality Plan (as the case may be).

20.7 The Contractor shall from time to time submit to the Project Co's Representative in accordance with Schedule Part 8 (*Review Procedure*) any changes to any of the Quality Plans required for such Quality Plan to continue to comply with the requirements set out in Clause 20.2. The Project Co's Representative may raise

comments on any such proposed change only on the grounds set out in paragraph 3 of Schedule Part 8 (*Review Procedure*).

20.8 If there is no objection under Schedule Part 8 (*Review Procedure*) to a change to any Quality Plan proposed pursuant to Clause 20.7, the Quality Plan shall be amended to incorporate such change.

Quality Manuals and Procedures

20.9 If any Quality Plan refers to, relies on or incorporates any quality manual or procedure, then such quality manual or procedure or the relevant parts of it shall be submitted to the Board's Representative at the time that the relevant Quality Plan or part of (or change to) a Quality Plan is submitted in accordance with Schedule Part 8 (*Review Procedure*), and the contents of such quality manual or procedure shall be taken into account in the consideration of the relevant Quality Plan or part of (or change to) a Quality Plan in accordance with Schedule Part 8 (*Review Procedure*).

Quality Management

20.10 The Contractor shall maintain a quality management system which shall:

20.10.1 ensure the effective operation of the quality systems described in this Clause 20 (*Quality Assurance*);

20.10.2 cause an audit of the quality systems at regular intervals and the findings of such audit will be reported to the Project Co's Representative;

20.10.3 require review of all quality systems at intervals agreed with the Project Co's Representative to ensure their continued suitability and effectiveness;

20.10.4 require liaison with the Project Co's Representative on all matters relating to quality management; and

20.10.5 require production of reports and their delivery to the Project Co.

Quality Monitoring

20.11 The Project Co's Representative and the Board's Representative may carry out audits of the Contractor's quality management system (including all relevant Quality Plans and any quality manuals and procedures) to establish that the Contractor is complying with Clauses 20.1 and 20.3. Audits may be carried out at approximate intervals of three (3) months and the Project Co's Representative and the Board's Representative may carry out other periodic monitoring, spot checks and auditing of the Contractor's quality management systems. The Contractor shall co operate with the Project Co's Representative and the Board's Representative including providing him with all information and documentation which he reasonably requires in connection with his rights under this Clause.

PART 5: NOT USED

21. NOT USED

PART 6: NOT USED

22. NOT USED

23. NOT USED

23A. NOT USED

24. NOT USED

25. NOT USED

26. NOT USED

27. SITE AND OFF-SITE SECURITY AND PERSONNEL ISSUES

Access

27.1 The Board and the Project Co shall have the right to refuse admittance to, or order the removal from, the Facilities and/or the Retained Estate of any person employed by (or acting on behalf of) the Contractor, or any Contractor Party whose presence, in the reasonable opinion of the Board (as notified to the Contractor by the Project Co's Representative) or of the Project Co, is likely to have a material adverse effect on the performance by the Project Co of its obligations under the Project Agreement or the provision by the Board of the relevant Board Services at the Facilities and/or the Retained Estate or who is not a fit and proper person to be in the Facilities and/or the Retained Estate.

27.2 Action taken under Clause 27.1 shall forthwith be confirmed in writing by the Project Co or the Project Co's Representative seeking to exercise any of its rights set out in Clause 27.1 to the Contractor and, to avoid doubt, shall not relieve the Contractor of any of its obligations under this Agreement.

27.3 If and when so directed in writing by the Project Co's Representative, the Contractor shall within eighteen (18) Business Days provide a list of the names and addresses of all persons it expects may require admission in connection with this Agreement, to any premises occupied by the Board or the Project Co, specifying the capacities in which those persons are concerned with this Agreement and giving such other particulars as the Board or the Project Co may reasonably require.

27.4 The decision of the Board (as notified to the Contractor through the Project Co or its Representative under this Clause 27) or the Project Co as to whether any person is to be refused admission shall be final and conclusive.

Board Policies

27.5 The Contractor shall, and shall procure that all Contractor Parties shall, comply at all times with the Board Policies.

27.6 The Project Co shall notify the Contractor of any proposed change to the Board Policies as soon as practicable (and, in any event, prior to such change taking effect). Subject to Clause 27.7, such change shall take effect as a Change in accordance with Schedule Part 16 (*Change Protocol*).

27.7 The Parties acknowledge that under Clause 27.7 of the Project Agreement the Board may relieve the Project Co from the obligation to comply with a change to a Board Policy. If the Project Co notifies the Contractor that the Project Co shall not be obliged to comply with any change to any Board Policy the Contractor shall

continue to comply with the relevant Board Policy prior to any change in which case such change shall not take effect as a Change in accordance with Schedule Part 16 (*Change Protocol*).

Resources and training

27.8 Not Used

27.9 Not Used.

Convictions and disciplinary action

27.10 Subject to Clause 27.11, the Contractor and the Project Co (to the extent permitted by Law) shall procure that all potential staff or persons performing any of the Construction Operations who may reasonably be expected in the course of their employment or engagement to have access to children, the elderly and/or vulnerable adults:

27.10.1 are questioned concerning their Convictions; and

27.10.2 are required to complete a Protecting Vulnerable Groups Scheme form.

27.11 The completion of a Protecting Vulnerable Groups Scheme form in accordance with Clause 27.10 shall not be applicable to any person engaged by the Contractor or any Contractor Party during the course of the Construction Operations (who is not a member of the Contractor or the Contractor Party's staff nor ordinarily at the Facilities and/or the Retained Estate) provided that any such person is always accompanied within the Facilities and/or Retained Estate by a member of the Contractor's staff who has satisfactorily completed a Protecting Vulnerable Groups Scheme form and who (if found to have any Convictions) has been employed or engaged in the Construction Operations with the Project Co's prior written consent pursuant to Clause 27.12.

27.12 The Contractor shall procure that no person who discloses any Convictions, or who is found to have any Convictions following the completion of a Protecting Vulnerable Groups Scheme form, in either case of which the Contractor or any Contractor Party is aware or ought to be aware is employed or engaged in the provision of the Construction Operations without the Project Co's prior written consent (such consent not to be unreasonably withheld or delayed). It is acknowledged and agreed that the Project Co shall be acting reasonably in withholding consent where the Board withholds consent under the equivalent provision in the Project Agreement.

27.13 The Contractor shall procure that the Project Co is kept advised at all times of any person employed or engaged by the Contractor or any Contractor Party in the provision of any of the Construction Operations who, subsequent to his/her commencement of such employment or engagement, receives a Conviction of which the Contractor or any Contractor Party becomes aware or whose previous Convictions become known to the Contractor or any Contractor Party.

27.14 The Project Co's Representative (acting reasonably) may instruct the Contractor to procure that appropriate disciplinary action is taken against any employee of the Contractor or any Contractor Party (in accordance with the terms and conditions of employment of the employee concerned) who misconducts himself or is incompetent or negligent in his duties or whose presence or conduct on the Site and/or Off-Site or at work is otherwise considered by the Project Co's Representative (acting reasonably) to be undesirable. The Project Co shall co-operate with any such disciplinary proceedings and shall be advised in writing by the Contractor of the outcome.

27.15 The Contractor shall procure that there are set up and maintained, by it and by all Contractor Parties, personnel policies and procedures covering all relevant matters (including discipline, grievance, equal opportunities and health and safety). The Contractor shall procure that the terms and the implementation of such policies and procedures comply with Law and Good Industry Practice and that they are published in written form and that copies of them (and any revisions and amendments to them) are forthwith issued to the Project Co.

Management

27.16 [Not Used]

27.17 [Not Used]

Lists and Records

27.18 [Not Used]

Health Requirements

27.19 Not Used.

27.20 Not Used

27.21 Not Used

27.22 Not Used

28. STOCKS CONSUMABLES, MATERIALS AND EQUIPMENT

Standards

28.1 Not Used

28.2 Not Used

28.3 Not Used

Hazardous substances and materials

28.4 The Contractor shall not install, keep or use in or on the Facilities any materials, equipment or apparatus the installation, keeping or use of which is likely to cause (or in fact causes):

28.4.1 material damage to the Facilities;

28.4.2 dust, noise or vibration constituting a nuisance to the owners and/or occupiers of any property adjoining or near to the Facilities; or

28.4.3 the generation, accumulation or migration of any hazardous substance in an unlawful manner whether within or outside the Facilities,

and shall use all reasonable endeavours to ensure (by directions to staff and otherwise) that all materials, equipment or apparatus used in connection with the Construction Operations are operated so as to minimise noise and vibration likely to cause annoyance or disturbance and the unlawful generation or migration of any hazardous substance.

28.5 The Contractor shall not bring in or on to (or keep or maintain in or on) the Site or the Off-Site, any hazardous materials or equipment without the prior written consent of the Project Co and unless Contractor has complied with all relevant Law.

28.6 Without prejudice to the generality of its obligations, the Contractor shall:

28.6.1 procure that all hazardous materials and equipment used, by it or by a Sub-Contractor or used on behalf of any of them, or stored, by it or by a Sub-Contractor or stored on behalf of any of them, on the Site and/or Off-Site are kept in accordance with all relevant Law and Good Industry Practice, properly and securely labelled and stored, under appropriate supervision and used only by appropriately trained and competent staff; and

28.6.2 use all practicable and reasonable means to:

(a) prevent or counteract, to the satisfaction of the Project Co's Representative, the unlawful emission of any such hazardous substance;

(b) avoid the unlawful discharge into any conducting media serving the Facilities, of any hazardous substance;

(c) prevent the unlawful generation, accumulation or migration of any hazardous substance at or from the Site, or whilst it is under the control of the Contractor or any Contractor Party, the Off-Site; and

(d) prevent any Environmental Claims arising or any circumstances arising likely to result in any Environmental Claims,

in so far as any such hazardous substance is, or should be, under the control of the Contractor pursuant to this Agreement.

28.7 Not Used

PART 7: DELAY EVENTS, RELIEF EVENTS AND FORCE MAJEURE

29. DELAY EVENTS

29.1 If, at any time, the Contractor becomes aware that there will be (or there is likely to be) a delay in completion of the Works, the Contractor shall forthwith give notice to the Project Co's Representative to that effect specifying the relevant delay or impediment. In relation to any such delay or impediment, if the Project Co's Representative is satisfied, or it is determined in accordance with Schedule Part 20 (*Dispute Resolution Procedure*), that such delay or impediment has arisen as a result of the occurrence of a Delay Event, then, subject to Clause 29.2, the Project Co's Representative shall subject to Clause 75 (*Overriding Entitlements*) in respect of Clauses 29.3.1 to 29.3.12 (*Board Delay Events*) and subject to Clause 76 (*Project Co Breach and Non PA Entitlement Obligations*) in respect of Clauses 29.3.13 to 29.3.15 (*Project Co Delay Events*) allow the Contractor an extension of time equal to the delay or impediment caused by such Delay Event (taking into account reasonably foreseeable consequences of the Delay Event) and shall revise the Completion Date accordingly.

29.2 If the Contractor is (or claims to be) affected by a Delay Event:

29.2.1 it shall (and shall procure that the Contractor Parties shall) take and continue to take all reasonable steps to eliminate or mitigate the consequences of such an event upon the performance of its obligations under this Agreement and, where relevant, resume performance of its obligations affected by the Delay Event as soon as practicable; and

29.2.2 it shall neither be relieved from liability under this Agreement nor entitled to any extension of time for the purpose of Clause 29 (*Delay Events*) to the extent that it is delayed or impeded due to its failure (if any) to comply with its obligations under Clause 29.2.1 above.

29.3 For the purposes of this Agreement, a Delay Event means any of the following to the extent in each case that there will be (or is likely to be) a delay in completion of the Works:

29.3.1 the occurrence of a Qualifying Change which results in a Change in relation to which it has been agreed or determined under the Project Agreement that the implementation of the Board Change would delay the completion of the Works. **"Qualifying Change"** shall have the meaning given in the Project Agreement;

29.3.2 any breach by the Board and/or any Board Party of any of the Board's express obligations under the Project Agreement to the extent in each case that any such breach is not caused, or contributed to, by the Contractor or any Contractor Party;

29.3.3 the execution of works on the Site not forming part of this Agreement by the Board or any contractors employed by the Board;

29.3.4 opening up of the Works pursuant to Clauses 13.3 to 13.7 (inclusive) where such Works are not subsequently found to be defective (unless it is agreed or determined in accordance with Schedule Part 20 (*Dispute Resolution Procedure*) that the opening up of the Works was reasonable in the light of other defects previously discovered by the Project Co);

29.3.5 Force Majeure;

29.3.6 a Relief Event;

29.3.7 a Relevant Change in Law referred to in Clause 32.3.1 (*Discriminatory Change in Law*) and Clause 32.3.2 (*Specific Change in Law*); or

29.3.8 the occurrence or circumstances deemed to be a Compensation Event pursuant to Clause 10.4;

29.3.9 an instruction by the Project Co's Representative to the Contractor to stop the relevant part or parts of the Construction Operations pursuant to Clause 13A.1.1 *(Project Co's Right to Stop Construction Operations During the Construction Phase)* where it is subsequently agreed or determined in accordance with Schedule Part 20 (*Dispute Resolution Procedure*) that the breach which the Project Co's Representative considered had given rise to a Stop Incident(s) had not occurred.

29.3.10 an instruction by the Project Co's Representative to the Contractor to stop the relevant part or parts of the Construction Operations pursuant to Clause 13A.1.2 *(Project Co's Right to Stop Construction Operations During the Construction)*;

29.3.11 an instruction by the Project Co's Representative to the Contractor to stop the relevant part or parts of the Construction Operations pursuant to Clause 13A.1.3 *(Project Co's Right to Stop Construction Operations During the Construction)*;

29.3.12 subject to the Contractor complying with the mitigation measures set out within Section 4.3 (*Construction Methodology*) Project Co's Proposals, the exercise of any of the Reserved Rights set out in paragraphs 12 and/or 13 and/or 14 of Section 2 (*Reserved Rights*) of Schedule Part 5 (*Land Matters*);

29.3.13 any Project Co breach of its express obligations under this Agreement to the extent in each case that any such breach is not caused, or contributed to, by the Contractor or any Contractor Party;

29.3.14 suspension by the Contractor of performance of its obligations under this Agreement pursuant to Clause 34.14 (*suspension for non payment*); or

29.3.15 a Change initiated by Project Co other than arising from a Board Change, or where the Change has been issued because of the breach of contract, negligence or other default of the Contractor or any Contractor Party.

29.4 Without prejudice to the generality of Clause 29 (*Delay Events*), the Contractor shall give notice in writing to the Project Co's Representative as soon as it can reasonably foresee a Delay Event occurring or, if the same is not reasonably foreseeable, as soon as it shall become aware of a Delay Event. The Contractor shall within eight (8) Business Days after such notification, give further written details to the Project Co's Representative which shall include:

29.4.1 a statement of which Delay Event the claim is based upon;

29.4.2 details of the circumstances from which the Delay Event arises;

29.4.3 details of the contemporary records which the Contractor will maintain to substantiate its claim for extra time;

29.4.4 details of the consequences (whether direct or indirect, financial or non-financial) which such Delay Event may have upon completion of the Works; and

29.4.5 details of any measures which the Contractor proposes to adopt to mitigate the consequences of such Delay Event.

29.5 As soon as possible but in any event within three (3) Business Days of the Contractor receiving, or becoming aware of, any supplemental information which may further substantiate or support the Contractor's claim then, provided that the Completion Date has not otherwise already been revised pursuant to Clause 29.7, the Contractor shall submit further particulars based on such information to the Project Co's Representative.

29.6 The Project Co's Representative shall, after receipt of written details under Clause 29.4, or of further particulars under Clause 29.5, be entitled by notice in writing to

require the Contractor to provide such further supporting particulars as he may reasonably consider necessary. The Contractor shall afford the Project Co's Representative and the Board's Representative reasonable facilities for investigating the validity of the Contractor's claim including, without limitation, onsite inspection.

29.7 Subject to Clause 75 (*Overriding Entitlements*) in respect of Board Delay Events, Clause 76 (*Project Co Breach and Non PA Entitlement Obligations*) in respect of Project Co Delay Events and subject to the provisions of this Clause, the Project Co's Representative shall fix a revised Completion Date in accordance with Clause 29.1 (*Delay Events*) as soon as reasonably practicable and in any event within fourteen (14) Business Days of the later of:

29.7.1 the date of receipt by the Project Co's Representative of the Contractor's notice given in accordance with Clause 29.4 and the date of receipt of any further particulars (if such are required under Clause 29.6), whichever is the later; and

29.7.2 the date of receipt by the Project Co's Representative of any supplemental information supplied by the Contractor in accordance with Clause 29.5 and the date of receipt of any further particulars (if such are required under Clause 29.6), whichever is the later.

29.8 If the Contractor has failed to comply with the requirements as to the giving of notice under Clause 29.4, or has failed to maintain records or afford facilities for inspection to Project Co's Representative or to the Board's Representative, then the Contractor shall not be entitled to any extension of time (and the Completion Date shall not be revised) in respect of any period of delay by the Contractor in giving notice or providing information under Clause 29.4 and/or to the extent that its failure to maintain records or afford facilities for inspection to the Project Co's Representative or to Board's Representative has prevented the Project Co's Representative or to Board's Representative from assessing the consequences of the Delay Event.

29.8A If:

29.8.A.1 the Project Co's Representative declines to fix a revised Completion Date; or

29.8.A.2 the Contractor considers that a different Completion Date should be fixed; or

29.8.A.3 there is a disagreement as to whether a Delay Event has occurred,

then the Contractor shall be entitled to refer the matter for determination in accordance with Schedule Part 20 (*Dispute Resolution Procedure*).

29.9 The Project Co may in its absolute discretion at any time (including after the Completion Date) grant to the Contractor an extension of time for any matter not constituting a Delay Event.

Compensation

29.10 If the Delay Event is a Compensation Event the Contractor's sole right to compensation shall be as provided for in Clauses 29.11 to 29.13 inclusive. To avoid doubt, no other Delay Event shall entitle the Contractor to receive any compensation save as otherwise expressly provided in:

29.10.1 Schedule Part 16 (*Change Protocol*) in the case of a Delay Event referred to in Clause 29.3.1 (subject always to the provisions of Clause 32 (*Changes in Law*)); or

29.10.2 Clause 32 (*Changes in Law*) in the case of a Delay Event referred to in Clause 29.3.7.

29.11 For the purposes of Clause 29.10, a Compensation Event means:

29.11.1 any Delay Event referred to in Clause 29.3.2, Clause 29.3.3 or Clauses 29.3.4, 29.3.9, 29.3.10, 29.3.11, 29.3.12, 29.3.13 and 29.3.14 for which, in each case, it has been agreed or determined pursuant to this Clause 29 (*Delay Events*) that the Contractor is entitled to an extension of time;

29.11.2 in the period prior to the Actual Completion Date, in circumstances where there is no delay in completion of the Works, any breach by the Board and/or any Board Party of any of the Board's express obligations under the Project Agreement or by the Project Co or any Project Co Party of any of their express obligations under this Agreement to the extent that such breach is not caused, or contributed to, by the Contractor or any Contractor Co Party;

29.11.3 the occurrence or circumstances deemed to be a Compensation Event pursuant to Clause 10.4 (*Responsibility for Contamination*); or

29.11.4 subject to the Contractor complying with the mitigation measures set out within Section 4.3 (*Construction Methodology*) of Project Co's Proposals, the exercise of any of the Reserved Rights set out in paragraphs 12 and/or 13 and/or 14 of Section 2 of Schedule Part 5 (*Land Matters*).

29.12 Subject to Clause 29.13, if it is agreed, or determined, that there has been a Compensation Event, and that the Contractor has incurred loss and/or expense as a direct result of such Compensation Event, the Contractor shall, subject to Clause 75 (*Overriding Entitlements*), be entitled to compensation on a fair and reasonable valuation basis. The Contractor shall promptly provide the Project Co with any additional information it may require in order to determine the amount of such compensation payable by the Project Co. Any compensation to which the Contractor is entitled under this Clause 29.12 shall, subject to Clause 75 (*Overriding Entitlements*), be paid by the Project Co within 25 Business Days of the date on which the amount of such compensation is agreed or determined.

29.13 The Contractor shall take all reasonable steps so as to minimise the loss and/or expense referred to in Clause 29.13 (and shall in the event that the Project Co is in breach of Clause 5.7 (*Enabling Works*) include the rearranging of programmed activities pursuant to the Programme but only to the extent that this causes the Contractor minimal disruption and no critical delay to the Programme) in relation to any Compensation Event and any compensation payable shall:

29.13.1 exclude any amounts incurred or to be incurred as a result of any failure of the Contractor (or any Contractor Party) to comply with this Clause 29.13; and

29.13.2 be reduced by any amount which the Contractor has recovered or will recover under any insurance policy (or would have recovered if it had complied with the requirements of this Agreement or of any policy of insurance required under this Agreement) which amount, to avoid doubt, shall not include any excess or deductibles or any

amount over the maximum amount insured applicable to any such insurance policy.

29.14 The amount of any compensation due to the Contractor under Clause 29.12 shall be agreed between the parties or, failing agreement, determined pursuant to Schedule Part 20 (*Dispute Resolution Procedure*).

30. RELIEF EVENTS

30.1 For the purposes of this Agreement, subject to Clause 30.4, Relief Events mean any of the following events:

30.1.1 fire, explosion, lightning, storm, tempest, flood, bursting or overflowing of water tanks, apparatus or pipes, ionising radiation (to the extent it does not constitute Force Majeure), earthquake, riot or civil commotion;

30.1.2 failure by any statutory undertaker, utility company, local authority or other like body to carry out works or provide services;

30.1.3 accidental loss or damage to the Works and/or Facilities or any roads servicing the same;

30.1.4 without prejudice to any obligation of the Contractor to provide stand-by power facilities in accordance with the Board's Construction Requirements, failure or shortage of power, fuel or transport;

30.1.5 blockade or embargo falling short of Force Majeure;

30.1.6 the discovery of fossils, antiquities and human remains requiring action in accordance with Clause 19 (*Fossils and Antiquities*); or

30.1.7 official or unofficial strike, lockout, go slow or other dispute in each case generally affecting the construction industry (or a significant sector of that industry),

provided in each case that such event does not arise (directly or indirectly) as a result of any wilful act or default of the party claiming relief and/or (i) in the case of the Contractor claiming relief, any Contractor Party and (ii) in the case of the Project Co claiming relief, any Project Co Party.

30.2 Subject to Clauses 30.3 and 30.4, no right of termination shall arise under this Agreement by reason of any failure by a party to perform any of its obligations under this Agreement to the extent that such failure to perform occurs because of the occurrence of a Relief Event (and, to avoid doubt, and without prejudice to Clause 30.9, unless expressly stated to the contrary in this Agreement, it is acknowledged that all other rights and obligations of the parties under this Agreement remain unaffected by the occurrence of a Relief Event).

30.3 Without prejudice to the Contractor's rights under Clause 29 (*Delay Events*), the Contractor shall only be relieved of its obligations under Clauses 12 (*The Design Construction and Commissioning Process*), 13 (*Right of Access of Project Co's Representative, the Funders' Technical Adviser, the Independent Tester and the Board's Representative*), 14 (*Programme and Dates for Completion*), 17 (*Pre-Completion Commissioning and Completion*) and 29 (*Delay Events*) by Delay Events in accordance with Clause 29 (*Delay Events*).

Mitigation

30.4 Where a party is (or claims to be) affected by a Relief Event:

30.4.1 it shall take all reasonable steps to mitigate the consequences of such an event upon the performance of its obligations under this Agreement, resume performance of its obligations affected by the Relief Event as soon as practicable and use all reasonable endeavours to remedy its failure to perform; and

30.4.2 it shall not be entitled to rely upon the relief afforded to it pursuant to Clause 30.2 of this Agreement to the extent that it is not able to perform, or has not in fact performed, its obligations under this Agreement due to its failure (if any) to comply with its obligations under Clause 30.4.1 above.

30.5 The party claiming relief shall serve written notice on the other party within five (5) Business Days of it becoming aware of the relevant Relief Event. Such initial notice shall give sufficient details to identify the particular event claimed to be a Relief Event.

30.6 A subsequent written notice shall be served by the party claiming relief on the other party within a further five (5) Business Days of the notice referred to in Clause 30.5 which shall contain such relevant information relating to the failure to perform (or delay in performing) as is available, including (without limitation) the effect of the Relief Event on the ability of the party to perform, the action being taken in accordance with Clause 30.4, the date of the occurrence of the Relief Event and an estimate of the period of time required to overcome it (and/or its effects).

30.7 The party claiming relief shall notify the other as soon as the consequences of the Relief Event have ceased and of when performance of its affected obligations can be resumed.

30.8 If, following the issue of any notice referred to in Clause 30.6, the party claiming relief receives or becomes aware of any further information relating to the Relief Event (and/or any failure to perform), it shall submit such further information to the other party as soon as reasonably possible.

30.9 To avoid doubt, the occurrence of a Relief Event shall not entitle the Contractor to any compensation except such payment as envisaged in Clause 30.12.

30.10 Subject to Clause 30.11, where an extension of time to the Completion Date is granted under Clause 29 *(Delay Events)* for a Relief Event, the Contractor shall pay to the Project Co the Relief Event liquidated damages stated in Schedule Part 33 (*Liquidated Damages*) ("**Relief Event Liquidated Damages**") for the period of such extension of time.

30.11 The Project Co shall, by written notice to the Contractor, state the amount of any Relief Event Liquidated Damages payable in accordance with Clause 30.10,. The Relief Event Liquidated Damages shall be paid no later than twenty (20) Business Days after the date of the notice given pursuant to Clause 30.11.

30.12 In relation to any Relief Event, where the Contractor has paid the Relief Event Liquidated Damages to the Project Co in accordance with Clauses 30.10 and 30.11 and the Project Co has received insurance proceeds under any advanced loss of profit insurance policy maintained by the Project Co in respect of any part of the period of delay caused by that Relief Event and in respect of which the Contractor has paid Relief Event Liquidated Damages to the Project Co, the Project Co shall, subject to the Insurance Proceeds Accounts Agreement, within

twenty (20) Business Days of the date of receipt of the insurance proceeds pay to the Contractor the lesser of:

30.12.1 the insurance proceeds received by the Project Co in respect of that Relief Event; and

30.12.2 the Relief Event Liquidated Damages paid by the Contractor in respect of that Relief Event.

30.13 For the avoidance of doubt, the Project Co shall use reasonable endeavours to pursue a claim under its advanced loss of profit insurance policy, if any, following the occurrence of a Relief Event.

31. FORCE MAJEURE

31.1 For the purposes of this Agreement, Force Majeure means any of the following events or circumstances:

31.1.1 war, civil war, armed conflict or terrorism; or

31.1.2 nuclear contamination unless in any case the Contractor and/or any Contractor Party is the source or the cause of the contamination; or

31.1.3 chemical or biological contamination of the Works and/or the Facilities and/or the Site from any of the events referred to in Clause 31.1.1 above; or

31.1.4 pressure waves caused by devices travelling at supersonic speeds,

which directly causes either party to be unable to comply with all or a material part of its obligations under this Agreement.

31.2 Subject to Clauses 31.3 and 31.4 the party claiming relief shall be relieved from liability under this Agreement to the extent that by reason of the Force Majeure it is not able to perform its obligations under this Agreement. For the avoidance of doubt (but without prejudice to Clause 41 (*Termination Resulting from Force Majeure*)) the Project Co shall not be entitled to terminate this Agreement for a Contractor Event of Default if such Contractor Event of Default arises from a Force Majeure Event.

31.3 Where a party is (or claims to be) affected by an event of Force Majeure:

31.3.1 it shall take all reasonable steps to mitigate the consequences of such an event upon the performance of its obligations under this Agreement, resume performance of its obligations affected by the event of Force Majeure as soon as practicable and use all reasonable endeavours to remedy its failure to perform; and

31.3.2 it shall not be relieved from liability under this Agreement to the extent that it is not able to perform, or has not in fact performed, its obligations under this Agreement due to its failure (if any) to comply with its obligations under Clause 31.3.1.

31.4 Without prejudice to the Contractor's rights under Clause 29 (*Delay Events*), the Contractor shall only be relieved from its obligations under Clauses 12 (*The Design Construction and Commissioning Process*), 13 (*Right of Access of Project Co's Representative, the Funders' Technical Adviser, the Independent Tester and the Board's Representative*), 14 (*Programme and Dates for Completion*) and 29 (*Delay Events*) by Delay Events in accordance with Clause 29 (*Delay Events*).

31.5 The party claiming relief shall serve written notice on the other party within three (3) Business Days of it becoming aware of the relevant event of Force Majeure. Such initial notice shall give sufficient details to identify the particular event claimed to be an event of Force Majeure.

31.6 A subsequent written notice shall be served by the party claiming relief on the other party within a further three (3) Business Days which shall contain such relevant information relating to the failure to perform (or delay in performing) as is available, including (without limitation) the effect of the event of Force Majeure on the ability of the party to perform, the action being taken in accordance with Clause 31.3, the date of the occurrence of the event of Force Majeure and an estimate of the period of time required to overcome it (and/or its effects).

31.7 The party claiming relief shall notify the other as soon as the consequences of the event of Force Majeure have ceased and of when performance of its affected obligations can be resumed.

31.8 If, following the issue of any notice referred to in Clause 31.6, the party claiming relief receives or becomes aware of any further information relating to the event of Force Majeure (and/or any failure to perform), it shall submit such further information to the other party as soon as reasonably possible.

31.8A Subject to Clause 31.8B, where an extension of time to the Completion Date is granted under Clause 29 (*Delay Events*) for an event of Force Majeure, the Contractor shall pay to the Project Co the Force Majeure liquidated damages stated in Schedule Part 33 (*Liquidated Damages*) ("**Force Majeure Liquidated Damages**") for the period of such extension of time.

31.8B The Project Co shall, by written notice to the Contractor, state the amount of any Force Majeure Liquidated Damages payable in accordance with Clause 31.8A (*Force Majeure*). The Force Majeure Liquidated Damages shall be paid no later than twenty (20) Business Days after the date of the notice given pursuant to Clause 31.8B.

31.8C In relation to any event of Force Majeure, where the Contractor has paid the Force Majeure Liquidated Damages to the Project Co in accordance with Clauses 31.8A and 31.8B and the Project Co has received insurance proceeds under any advanced loss of profit insurance policy maintained by the Project Co in respect of any part of the period of delay caused by that event of Force Majeure and in respect of which the Contractor has paid Force Majeure Liquidated Damages to the Project Co, the Project Co shall, subject to the Insurance Proceeds Accounts Agreement, within twenty (20) Business Days of the date of receipt of the insurance proceeds pay to the Contractor the lesser of:

31.8.C.1 the insurance proceeds received by the Project Co in respect of that event of Force Majeure; and

31.8.C.2 the Force Majeure Liquidated Damages paid by the Contractor in respect of that event of Force Majeure.

31.8.C.3 For the avoidance of doubt, the Project Co shall use reasonable endeavours to pursue a claim under its advanced loss of profit insurance policy, if any, following the occurrence of an event of Force Majeure.

31.9 [Not Used]

31.10 If an event of Force Majeure occurs at any time, the Contractor shall not be entitled to receive any compensation other than as expressly provided in Clause 46.1 (*Compensation on Termination*).

31.11 Subject to Clause 46.1 (*Compensation on Termination)*, the Contractor's sole right to payment or otherwise in relation to the occurrence of an event of Force Majeure shall be as provided in this Clause 31.

31.12 The parties shall endeavour to agree any modifications to this Agreement which may be equitable having regard to the nature of an event or events of Force Majeure. Schedule Part 20 (*Dispute Resolution Procedure*) shall not apply to a failure of the Board and the Project Co to reach agreement pursuant to this Clause 31.12.

PART 8: CHANGES IN LAW & CHANGES

32. CHANGES IN LAW

General

32.1 The Contractor shall take all steps necessary to ensure that the Construction Operations are performed in accordance with the terms of this Agreement (including, without limitation, Clause 5.2.1 (*General standards*)) following any Change in Law.

Relevant Changes in Law

32.2 Subject to Clause 32.4.3(e) and Clause 32.4.3(f) and on the occurrence of any Relevant Change in Law, the parties shall be entitled to seek adjustments to the Contract Sum to compensate for any increase or decrease (as the case may be) in the net cost to the Contractor of performing the Construction Operations. Such adjustments (if any) will be calculated in accordance with and subject to Clause 32.4.

32.3 Relevant Change in Law means any of the following:

32.3.1 the occurrence of any Discriminatory Change in Law having an impact on the cost of performance of the Construction Operations;

32.3.2 the occurrence of any Specific Change in Law having an impact on the cost of performance of the Construction Operations; or

32.3.3 the occurrence, after the relevant date, of any Change in Law which requires any work of alteration, addition, demolition or extension or variation in the quality or function of the Facilities which is not work which the Contractor would (had such Change in Law not taken effect) otherwise be required to undertake to comply with its obligations under this Agreement. For the purposes of this Clause 32.3.3, the relevant date shall be the later to occur of the Completion Date and the Actual Completion Date, save where the Actual Completion Date is delayed by a Compensation Event, a Delay Event referred to in Clause 29.3.1 or by a Delay Event referred to in Clause 29.3.7, in which case the relevant date shall be the later to occur of the Completion Date and the date on which the Works would have been completed in accordance with this Agreement had the relevant Compensation Event or Delay Event not occurred,

provided that:

(a) such Change in Law (or, in the case of a Specific Change in Law, change to a NHS Requirement, as the case may be) was not reasonably foreseeable at the date of this Agreement by an experienced contractor performing

operations similar to the relevant Construction Operations, on the basis of draft bills published in Government green or white papers or other Government departmental consultation papers, bills, draft statutory instruments or draft instruments or proposals published in the Official Journal of the European Union, in each case published:

(i) prior to the date of this Agreement; and

(ii) in substantially the same form or having substantially the same effect as the Relevant Change in Law; and

(b) a Change in Law relating to the application for, coming into effect, terms, implementation, repeal, revocation or otherwise of any Planning Permission shall not constitute a Relevant Change in Law.

32.4 The Contractor shall provide to the Project Co all documentation and other assistance that the Project Co requires to comply with its obligations under Clause 32.4 of the Project Agreement and to the extent instructed by the Project Co, shall comply with Clause 32.4 of the Project Agreement on behalf of the Project Co:

32.4.1 the Contractor shall implement any Change Notice confirmed or approved by the Board pursuant to Clause 32.4 of the Project Agreement which relates to the Construction Operations;

32.4.2 [Not Used]

32.4.3

(a) [Not Used]

(b) [Not Used]

(c) the provisions of Clause 11 (*Consents & Planning Approval*) shall apply in respect of any Change Notice issued pursuant to Clause 32.4 of the Project Agreement;

(d) [Not Used]

(e) the Contractor shall, without prejudice to its general obligation to comply with the terms of this Agreement:

(i) use all reasonable endeavours to mitigate the adverse effects of any Relevant Change in Law and take all reasonable steps to minimise any increase in costs arising from such Relevant Change in Law; and

(ii) use all reasonable endeavours to take advantage of any positive or beneficial effects of any Relevant Change in Law and take all reasonable steps to maximise any reduction in costs arising from such Relevant Change in Law; and

(f) any compensation payable, or reduction to the Contract Sum, shall be calculated in accordance with the relevant

provisions of Schedule Part 16 (*Change Protocol*) provided that:

(i) the amount of any compensation payable; or

(ii) the amount by which the Contract Sum is to be reduced,

shall not take into account any amounts incurred or to be incurred as a result of the Contractor's failure to comply with Clause 32.4.3(e) above.

General Change in Law

32.5 Either party may give notice to the other of the need for a Change which is necessary in order to enable the Contractor to comply with any Change in Law which is not a Relevant Change in Law, in which event:

(a) the Contractor will provide the Project Co with all documentation and other assistance that the Project Co requires to comply with its obligations under Clause 32.5 of the Project Agreement and, to the extent instructed by the Project Co, shall comply with Clause 32.5 of the Project Agreement on behalf of the Project Co. The Contractor will implement any Board Change Notice issued by the Board pursuant to Clause 32.5 of the Project Agreement which relates to the Construction Operations. The provisions of Clause 11 (*Consents & Planning Approval*) shall apply in respect of any Variation the subject of a Board Change Notice issued pursuant to Clause 32.5 of the Project Agreement.

(b) the Contractor shall not be entitled to any payment or other compensation or relief from any performance of its obligations under this Agreement in respect of such Change in Law or associated Change (or the consequences of either).

33. CHANGE PROCEDURE

The provisions of Schedule Part 16 (*Change Protocol*) shall have effect in respect of Changes except as otherwise expressly provided in this Agreement.

PART 9: FINANCIAL

34. PAYMENT

Payment of the Contract Sum

34.1 In consideration of the Contractor performing its obligations under this Agreement, the Project Co shall pay to the Contractor the Contract Sum or such other sum as shall become payable hereunder at the times and in the manner specified by this Clause 34 (*Payment*). The Contract Sum shall not be adjusted or altered in any way whatsoever otherwise than in accordance with the express provisions of this Agreement. Where in this Agreement it is provided that an amount is to be added to or deducted from the Contract Sum or dealt with by adjustment of the Contract Sum then, subject always to Clause 75 (*Overriding Entitlements*) and/or Clause 76 (*Project Co Breach and Non PA Entitlement Obligations*) (as the case may be), as soon as such amount is ascertained in whole or in part, such amount shall be

taken into account in the computation of the next Interim Payment following such whole or partial ascertainment.

Interim payment

34.2 Interim Payments shall be made by the Project Co to the Contractor in accordance with Clauses 34.3 to 34.14.

34.3 The amount due as an Interim Payment shall be the gross valuation as referred to in Clause 34.4, less:

34.3.1 any amount which the Project Co may deduct and retain as provided in Clause 34.15 (the "**Retention**"); and

34.3.2 [Not Used]; and

34.3.3 any amount which the Project Co may deduct and withhold as provided in Clause 5.8.3; and

34.3.4 the sum of the amounts paid in previous Interim Payments.

34.4 The gross valuation for the purposes of Interim Payments is

34.4.1 the lesser of:

(a) the aggregate of the amounts referred to in Clause 34.5.1; and

(b) the amount referred to in Clause 34.5.2;

less

34.4.2 the amounts referred to in Clause 34.5.3.

34.5

34.5.1 The amounts referred to in this Clause 34.5.1 are:

(a) the value of the work executed to date determined by reference to the Progress Milestone Schedule and the progress made to date, subject always to the provisions in Clause 34.6; and

(b) any other amount which is required by this Agreement to be paid to the Contractor by the Project Co;

34.5.2 The amount referred to in this Clause 34.5.2 is the amount specified in the cumulative amount column of the Maximum Payment Schedule for the relevant period.

34.5.3 The amounts referred to in this Clause 34.5.3 are any amount which is required by this Agreement to be paid to the Project Co by the Contractor.

34.6 Subject to Clause 34.7, for the purposes of determining the amount referred to in Clause 34.5.1, only the following amounts will be included:

34.6.1 in respect of each Progress Milestone falling within the period from commencement of the Works to the date on which the Application

for Interim Payment is made (the **"Relevant Period"**) which has been certified by the Funders' Technical Advisor or is determined in accordance with Schedule Part 20 (*Dispute Resolution Procedure*) as having been completed, the amount for that Progress Milestone as shown in the Progress Milestone Schedule provided that if any payment is made in respect of a partially completed Progress Milestone under Clause 34.6.2, the payment(s) made in respect of that partially completed Progress Milestone shall be deducted from any payment to be made under Clause 34.6.1 where the same Progress Milestone has been completed; and

34.6.2 in respect of each Progress Milestone falling within the Relevant Period which has been partially completed, a proportion of the amount for that Progress Milestone as shown in the Progress Milestone Schedule taking into account the amount of actual progress as certified by the Funders' Technical Advisor or as determined in accordance with Schedule Part 20 (*Dispute Resolution Procedure*); and

34.6.3 in respect of each Progress Milestone for the month immediately following the Relevant Period, if a Progress Milestone occurs in advance of when anticipated in the Programme Milestone Schedule, a proportion of the amount for that Progress Milestone as shown in the Progress Milestone Schedule taking into account the amount of actual progress as certified by the Funders' Technical Advisor or as determined in accordance with Schedule Part 20 (*Dispute Resolution Procedure*) and provided always that, in the reasonable opinion of the Funders' Technical Advisor or it is determined in accordance with Schedule Part 20 (*Dispute Resolution Procedure*), the overall programme is not materially in delay and provided also that no payment can be made in advance of the drawdown schedule under the Funding Agreements.

34.7 Where the Contractor disagrees with any of the decisions of the Funders' Technical Advisor under Clause 34.6, such disagreement shall be resolved in accordance with Schedule Part 20 (*Dispute Resolution Procedure*) as if it is a dispute between the Contractor and the Project Co. The determination of the Dispute Resolution Procedure, to the extent that it differs from the decision of the Funders' Technical Advisor, shall override the decision of the Funders' Technical Advisor to such extent.

Application for Interim payment

34.8 The Contractor shall make its first Application for Interim Payment on the last Business Day of the calendar month in which the Commencement Date falls and thereafter on the same date in each month up to the date named in the Certificate of Practical Completion or to within one month thereafter. Thereafter any Application for Interim Payment shall be made as and when further amounts are due to the Contractor provided that Project Co shall not be required to make any Interim Payment within one month of having made a previous Interim Payment.

34.8A Notwithstanding the other provisions of this Clause 34 (*Payment*) the Contractor shall be entitled to submit to the Project Co two invoices as set out below for nine million two hundred and forty three thousand pounds (£9,243,000) in the aggregate (the "**Initial Payment**") on or after the Effective Date. One invoice will be for three hundred and sixty thousand pounds (£360,000) and shall be stated to be for design fees, and the other invoice shall be for eight million, eight hundred and eighty three thousand pounds. The Initial Payment shall be payable in accordance with Clauses 34.9 to 34.12 below provided that, for the purposes of paying the Initial Payment under this Clause 34.8A only, references to "Interim

Payment" in Clauses 34.9 to 34.12 are deemed to refer to "Initial Payment", receipt by the Project Co of the invoice for the Initial Payment from Contractor in accordance with this Clause 34.8A shall be deemed to be a valid Application for Interim Payment under Clause 34.9, the "Due Date" for the Initial Payment under Clause 34.9 shall be deemed to be the date of receipt by the Project Co of the invoice for the Initial Payment from Contractor in accordance with this Clause 34.8A, and the final date for payment of the Initial Payment under Clause 34.12 shall be deemed to be five (5) Business Days after the due date for payment.

34.9 Each Application for Interim Payment will be sent to the Project Co's Representative and the Funders' Technical Adviser and will be accompanied by such supporting information and details as the Project Co's Representative or the Funders' Technical Adviser shall from time to time reasonably request. The due date for payment for an Interim Payment shall be two (2) Business Days after the Project Co's receipt of the Application for Interim Payment submitted in accordance with Clause 34.8 (the "**Due Date**").

34.10 Not later than five (5) days after the Due Date, the Project Co's Representative shall give written notice to the Contractor specifying the amount of the payment proposed to be made in respect of that Application, the basis on which such amount is calculated and to what that amount relates and, subject to Clause 34.11, shall pay the amount proposed no later than the final date for payment. Where the Project Co has not provided a written notice to the Contractor in accordance with this Clause 34.10, the Project Co shall, subject to Clause 34.11, pay the sum set out in the Application for Interim Payment provided in accordance with Clause 34.8 by the final date for payment.

34.11 Not later than five (5) Business Days before the final date for payment of an amount due pursuant to Clause 34.10 the Project Co's Representative may give a written notice to the Contractor of its intention to pay less than the sum set out in the written notice issued in accordance with Clause 34.10 (or, where the Project Co's Representative has not issued a written notice in accordance with Clause 34.10, the sum set out in the Application for Interim Payment provided in accordance with Clause 34.8) which shall specify the sum that the Project Co considers to be due on the date the notice is served and the basis on which that sum is calculated (a "**Pay Less Notice**"). Where the Project Co's Representative does give a Pay Less Notice in accordance with this Clause 34.11 then the Project Co shall pay the Contractor the amount stated as due in the Pay Less Notice. Where the Project Co's Representative does not give any notice pursuant to this Clause 34.11 the Project Co shall pay the Contractor the amount stated in the written notice provided by the Project Co's Representative in accordance with Clause 34.10 (or, where the Project Co's Representative has not issued a written notice in accordance with Clause 34.10, the sum set out in the Application for Interim Payment provided by the Contractor in accordance with Clause 34.8).

34.11A Not later than three (3) Business Days after receipt by the Contractor of a written notice provided in accordance with Clause 34.10, the Contractor shall issue a valid VAT invoice to the Project Co's Representative (copied to the Funders' Technical Adviser) for the amount stated in the payment notice. Where the Project Co's Representative has not provided a written notice in accordance with Clause 34.10, the Contractor shall issue a valid VAT invoice within three (3) Business Days after the last date on which the Project Co could serve a written notice in accordance with Clause 34.10.

34.12 The final date for payment of an amount due as an Interim Payment shall be sixteen (16) Business Days from the Due Date, provided that:

34.12.1 the Project Co shall not be liable to pay any Interim Payment unless the Contractor has submitted a valid VAT invoice in accordance with Clause 34.11A; and

34.12.2 notwithstanding Clauses 34.10 and 34.11, the Project Co shall not be required to pay an Interim Payment to the Contractor in accordance with this Clause 34 if the Contractor becomes insolvent after the final date upon which the Project Co may issue a Pay Less Notice in accordance with Clause 34.11. For the purposes of this Clause 34.12.2, "insolvent" shall have the meaning given to it in Section 113 of the Housing Grants, Construction and Regeneration Act 1996.

34.13 Subject to Clause 34.12, if the Project Co fails to pay the amount properly due, or any part thereof, properly due, to the Contractor by the final date for payment the Project Co shall pay to the Contractor, in addition to the amount not properly paid, interest thereon at the Default Interest Rate in accordance with clause 34.26 for the period until such payment is made. Any payment of interest under this Clause 34.13 shall not in any circumstances be construed as a waiver by the Contractor of its right to proper payment of the principal amount due from the Project Co to the Contractor in accordance with, and within the time stated in, this Agreement or of the rights of the Contractor in regard to suspension of the performance of its obligations under this Agreement to the Project Co pursuant to Clause 34.14 or to termination of this Agreement pursuant to the default referred to in Clause 40A (*Project Co Events of Default*).

34.14 Without prejudice to any other rights or remedies which the Contractor may possess, if the Project Co shall, subject to any notice issued pursuant to Clauses 34.10 or 34.11, fail to pay the Contractor in full by the final date for payment as required by this Agreement and such failure shall continue for five (5) Business Days after the Contractor has given to the Project Co written notice of its intention to suspend performance of its obligations under this Agreement to the Project Co and the ground or grounds on which it is intended to suspend performance then, subject to the terms of the Funders' Direct Agreement with the Contractor, the Contractor may suspend such performance of its obligations under the Agreement to the Project Co until payment in full occurs. Such suspension shall not be treated as an abandonment of the Works to which Clause 40.1.7 refers.

Retention

34.15 The amount that the Project Co may deduct and retain as referred to in Clause 34.3.1 is the Retention Percentage of the total amount included under Clause 34.4.1. The "**Retention Percentage**" shall be 3%. Subject to the rights of set off provided for in this Agreement:

34.15.1 half of the Retention Percentage will be paid to the Contractor when the Certificate of Practical Completion has been issued, and

34.15.2 the remaining half of the Retention Percentage will be released when the Certificate of Making Good of Defects has been issued.

34.16 For the avoidance of doubt, the Project Co shall have no fiduciary duty in respect of the Retention and shall have no obligation to place the Retention in a separate bank account.

34.17 The Project Co is entitled to exercise any right under the Agreement of deduction from monies due or to become due to the Contractor whether or not any retention is included in that amount by the operation of Clause 34 (*Payment*).

34.18 The Project Co may apply amounts held as the Retention in satisfaction (in whole or in part) of any claim that the Project Co has against the Contractor relating to or in connection with the Works or this Agreement.

Final Account

34.19 Within six (6) months of the issue of the final Certificate of Making Good Defects, the Contractor shall submit the Final Account and the Final Statement referred to in Clause 34.22 to the Project Co's Representative and the Funders' Technical Adviser for agreement by the Project Co's Representative. The Contractor shall supply the Project Co's Representative and the Funders' Technical Adviser with such supporting information and details as the Project Co's Representative and the Funders' Technical Adviser shall reasonably require. The Final Account shall not be conclusive evidence that the design, Works, materials or goods are in accordance with this Agreement.

34.20 The Contract Sum shall be adjusted in accordance with this Agreement and the Final Account shall set out the Contract Sum together with the adjustments set out in Clause 34.21.

34.21 There shall be deducted from the Contract Sum the following amounts:

34.21.1 the amounts of any saving resulting from a Change;

34.21.2 any other amounts which are required by this Agreement to be deducted from the Contract Sum (including sums applied to satisfy claims of the Project Co as contemplated by Clause 34.18).

There shall be added to the Contract Sum:

34.21.3 any costs incurred as a result of implementing a Change as agreed in accordance with Schedule Part 16 (*Change Protocol*).

34.21.4 any amount ascertained as compensation to the Contractor pursuant to Clause 29 (*Delay Events*);

34.21.5 any other sum which is required by this Agreement to be added to the Contract Sum.

34.22 The Final Statement shall set out:

34.22.1 the amount resulting from operation of Clause 34.21.3–34.21.5; and

34.22.2 the amounts already paid by the Project Co to the Contractor,

and the difference (if any) between the two sums shall be expressed as a balance due to the Contractor from the Project Co or to the Project Co from the Contractor as the case may be. The Final Statement shall state to what the balance relates and the basis on which the balance has been calculated.

34.23 If the Contractor does not submit the Final Account and the Final Statement within the period referred to in Clause 34.19, the Project Co may, on the expiry of the said period, give notice in writing to the Contractor that, if the Final Statement and Final Account are not submitted by the Contractor within two months from the date of the written notice, the Project Co may itself prepare or have prepared a Final Account and Final Statement (the "**Project Co Final Account**" and the "**Project Co Final Statement**"). The Contractor shall reimburse the Project Co (by way of deduction to the Contract Sum) all reasonable costs and expenses incurred by the Project Co in connection with the preparation of the Project Co Final Account and the Project Co Final Statement.

34.24 The Project Co Final Account shall set out the Contract Sum together with such adjustments based on the information in its possession as are referred to in Clause 34.21.3–34.21.5. The Project Co Final Statement shall set out the:

34.24.1 amount set out in the Project Co Final Account; and

34.24.2 sum of the amounts already paid by the Project Co to the Contractor,

and the difference (if any) between the two shall be expressed as a balance due to the Contractor from the Project Co or to the Project Co from the Contractor as the case may be. The Project Co Final Statement shall state to what the balance relates and the basis on which the balance has been calculated.

34.25

34.25.1 The due date for amounts payable in respect of the Final Statement or the Project Co Final Statement (as the case may be) shall be thirty (30) days after the date of submission of the Final Account and the Final Statement to the Project Co by the Contractor or the date of submission of the the Project Co Final Account and the Project Co Final Statement to Contractor by the Project Co (as the case may be) (the "**Final Statement Due Date**"). Within five (5) days of the Final Statement Due Date, the Project Co's Representative shall give written notice to the Contractor which shall specify the amount of the payment proposed to be made in respect of any balance stated as due to the Contractor from the Project Co in the Final Statement or in the Project Co's Final Statement and the basis on which that sum is calculated. Where the Project Co's Representative does not give any notice pursuant to this Clause 34.25.1, the Project Co shall pay the Contractor the amount stated in the Final Statement or the Project Co Final Statement (as the case may be).

34.25.2 The final date for payment of the said balance by the Project Co to the Contractor or by the Contractor to the Project Co, as the case may be, shall be twenty (20) Business Days from the Final Statement Due Date. Not later than five (5) Business Days before the final date for payment of any balance to the Contractor, the Project Co may give written notice to the Contractor of its intention to pay less which shall specify the sum that the Project Co considers to be due on the date the notice is served and the basis on which that sum is calculated. The Project Co will only be entitled to serve a pay less notice in relation to the Final Statement for and in respect of facts, matters or circumstances of which the Project Co was not aware on the date that the written statement is issued by the Project Co pursuant to Clause 34.25.1.

34.25.3 Where the Project Co does not give a payless notice pursuant to Clause 34.25.2 the Project Co shall pay the Contractor the amount stated in the notice given by Project Co under Clause 34.25.1, or, where Project Co has failed to give a notice under Clause 34.25.1, the balance as stated as due to the Contractor in the Final Statement or in the Project Co Final Statement.

34.25.4 If the Contractor or the Project Co fails properly to pay the said balance or any part thereof by the final date for its payment, the Contractor or the Project Co, as the case may be, shall pay to the other in addition to the balance not properly paid interest thereon at the Default Interest Rate in accordance with Clause 34.26 for the

period until such payment is made. Any payment of interest under this Clause 34.25.4 shall not in any circumstances be construed as a waiver by the Contractor or the Project Co, as the case may be, of its right to proper payment of the aforesaid balance due from the Contractor to the Project Co or from the Project Co to the Contractor in accordance with Clause 34.19-34.25.5 (*Final Account*).

34.25.5 Liability for payment of the balance pursuant to Clause 34.25.2 and of any interest pursuant to Clause 34.25.4 shall be treated as a debt due to the Project Co by the Contractor or to the Contractor by the Project Co as the case may be.

Late Payments

34.26 Each party shall be entitled, without prejudice to any other right or remedy, to receive interest on any payment not duly made pursuant to the terms of this Agreement on the due date calculated from day to day at a rate per annum equal to the Default Interest Rate and including from the day after the date on which payment was due up to and including the date of payment.

Set-Off

34.27 Subject to Clauses 34.11, 34.25.2 and 34.25.3, no provision of this Agreement shall operate to exclude or restrict any right available to the Project Co at common law to make set-off against, withholding from or abatement against any sums due or which at any time afterwards may become due to the Project Co by the Contractor under this Agreement.

34.28 Save where a sum is due, or becomes due from the Contractor to the Project Co upon termination of this Agreement the Contractor may use a Contractor Set Off Amount to reduce the amount of any sum then due, or which at any time afterwards may become due, from the Contractor to the Project Co under this Agreement.

34.29 Subject to Clause 46.11, whenever any sum of money shall be agreed, or determined, as due and payable by the Contractor to the Project Co, such sum may at the Project Co's discretion be deducted from or applied to reduce the amount of any sum then due, or which at any time afterwards may become due, to the Contractor from the Project Co under this Agreement provided that the Project has given the Contractor not less than three (3) Business Days' notice of its intention to deduct or apply such sum.

34.30 [Not used]

35. VAT AND CONSTRUCTION INDUSTRY TAX DEDUCTION SCHEME

VAT

35.1 All amounts stated to be payable by either party under this Agreement shall be exclusive of any VAT properly chargeable on any amount.

35.2 Each party shall pay to the other party any VAT properly chargeable on any supply made to it under this Agreement provided that it shall first have received from the other party a valid tax invoice in respect of that supply which complies with the requirements of Part III VAT Regulations 1995.

35.3 If either party (referred to in this Clause as the "**First Party**") shall consider that any VAT which the other party (referred to in this Clause as the "**Second Party**") claims to be properly chargeable to the First Party in connection with this

Agreement is not in fact properly so chargeable, the First Party shall be entitled to require the Second Party to obtain a ruling from the Commissioners for Customs and Excise (or, if relevant, such other body as is charged at the time with the collection and management of VAT) (referred to in this Clause as the "**Commissioners**") as to the VAT (if any) properly so chargeable. The Second Party shall forthwith request the Commissioners for such a ruling.

35.4 The following further provisions shall apply in respect of the application for a ruling in accordance with Clause 35.3:

35.4.1 prior to submitting its request for such a ruling and any further communication to the Commissioners in connection with the obtaining of the ruling, the Second Party shall first obtain the agreement of the First Party to the contents of such request and any such further communication, such agreement not to be unreasonably withheld or delayed;

35.4.2 the Second Party shall provide to the First Party copies of all communications received from the Commissioners in connection with the application for a ruling as soon as practicable after receipt; and

35.4.3 the Second Party shall use all reasonable endeavours (including without limitation the provision of such additional information as the Commissioners may require) to obtain such a ruling as soon as reasonably practicable following the initial request.

35.5 If a ruling is required by the First Party under Clause 35.3, the First Party shall not be obliged to pay the VAT so claimed by the Second Party unless and until a ruling is received from the Commissioners which states that a sum of VAT (the "**VAT Sum**") is properly so chargeable or the Commissioners state that they are not prepared to give any ruling on the matter. In this case, then subject to Clauses 35.6 and 35.7 and provided that the First Party shall first have received a valid tax invoice which complies with the requirements of Part III VAT Regulations 1995 and which states the VAT Sum to be the amount of VAT chargeable to the First Party, the First Party shall pay the VAT Sum (and any interest or penalties attributable to the VAT Sum) to the Second Party.

35.6 If the First Party disagrees with any ruling obtained pursuant to Clause 35.3 by the Second Party from the Commissioners, then the Second Party (provided that it is indemnified to its reasonable satisfaction against all costs and expenses including interest and penalties which it may incur in relation thereto) shall take such action and give such information and assistance to the First Party as the First Party may require to challenge such ruling or otherwise to resist or avoid the imposition of VAT on the relevant supply.

35.7 The following further provisions shall apply if the First Party shall exercise its rights under Clause 35.6:

35.7.1 the action which the First Party shall be entitled to require the Second Party to take shall include (without limitation) contesting any assessment to VAT or other relevant determination of the Commissioners before any VAT tribunal or court of competent jurisdiction and appealing any judgement or decision of any such tribunal or court;

35.7.2 if the Second Party shall be required to pay to or deposit with the Commissioners a sum equal to the VAT assessed as a condition precedent to its pursuing any appeal, the First Party shall, at its election, either pay such sum to the Commissioners on behalf of

the Second Party or on receipt of proof in a form reasonably satisfactory to the First Party that the Second Party has paid such sum to or deposited such sum with the Commissioners the First Party shall pay such sum to the Second Party;

35.7.3 save as specifically provided in Clause 35.5, the First Party shall not be obliged to pay to the Second Party any sum in respect of the VAT in dispute to the Second Party or in respect of VAT on any further supplies made by the Second Party to the First Party which are of the same type and raise the same issues as the supplies which are the subject of the relevant dispute unless and until the final outcome of the relevant dispute is that it is either determined or agreed that VAT is properly chargeable on the relevant supply or supplies; and

35.7.4 the Second Party shall account to the First Party for any costs awarded to the Second Party on any appeal, for any sum paid to or deposited with the Commissioners in accordance with Clause 35.7.2 which is repayable to the Second Party and for any interest to which the Second Party is entitled in respect of such sums.

Changes in recoverability of VAT

35.8 The parties acknowledge that pursuant to Clause 35.9 of the Project Agreement, where, following a Change in Law, the Project Co becomes unable to recover VAT attributable to supplies to be made to the Board by the Project Co pursuant to the Project Agreement, the Board is under an obligation to ensure that the Project Co is left in no better and no worse position than it would have been had such Change in Law not occurred (including but not limited to making such amendments to the Project Agreement as the Project Co and the Board shall agree acting reasonably), provided that the Project Co shall use all reasonable endeavours to mitigate the adverse effects of any such Change in Law. If, following a Change in Law, the Contractor becomes unable to recover VAT attributable to supplies to be made to the Project Co pursuant to this Agreement, the Project Co shall include in any claim under Clause 35.8 of the Project Agreement a claim on behalf of the Contractor for an amount of money that ensures that the Contractor is left in no better and no worse position than it would have been had such Change in Law not occurred (including (subject to the approval of the Board) but not limited to making such amendments to this Agreement as the Contractor and the Project Co agree acting reasonably), provided that the Contractor shall use all reasonable endeavours to mitigate the adverse effects of any such Change in Law.

35.9 The provisions of Clause 35.8 shall apply only if (and to the extent that) the Change in Law was not reasonably foreseeable at the date of this Agreement by an experienced contractor performing construction operations similar to the relevant Works on the basis of draft bills published in Government green or white papers or other Government departmental consultation papers, bills, draft statutory instruments or draft instruments or proposals published in the Official Journal of the European Union, in each case published:

35.9.1 prior to the date of this Agreement; and

35.9.2 in substantially the same form as the Change in Law.

Construction Industry Tax Deduction Scheme

35.10 This Clause 35.10 (*Construction Industry Tax Deduction Scheme*) relates to the Construction Industry Tax Deduction Scheme:

35.10.1 In this Clause 35.10 (*Construction Industry Tax Deduction Scheme*) (but not otherwise):

(a) **"the Act"** means the Finance Act 2004;

(b) **"the Regulations"** means the Income Tax (Construction Industry Scheme) Regulations 2005 (SI 2005/2045);

(c) "**the Legislation**" means Chapter 3 Part 3 of the Act and the Regulations, taken together; and

(d) "**contractor**" means a person who is a contractor for the purposes of Chapter 3 Part 3 of the Act.

35.10.2 Each of the Contractor and the Project Co shall comply with the Legislation.

35.10.3 If any payment due from the Project Co to the Contractor under this Agreement is a contract payment under section 60(1) of the Act, then the Project Co as contractor, shall (not later than ten (10) Business days before the first such payment is due to be made) verify, in accordance with paragraph 6 of the Regulations, whether the Contractor is registered for gross payment or for payment under deduction or is not registered under Chapter 3 Part 3 of the Act and for these purposes the Contractor hereby agrees to provide the Project Co with all information and assistance which may be required by the Project Co under the Regulations including (but not limited to) the Contractor's name, unique tax payer reference (UTR), company registration number, the National Insurance number (if applicable) and/or such other information as may be required under the Regulations in sufficient time to enable the Project Co to comply with its obligations. The Project Co shall, upon reasonable request from the Contractor, keep the Contractor informed of the verification process with HMRC.

35.10.4 If any payment due from the Project Co to the Contractor under this Agreement is a contract payment under section 60(1) of the Act, then:

(a) if the Project Co acting reasonably is satisfied that the Contractor is registered for gross payment under section 63(2) of the Act, the Project Co shall make a payment to the Contractor without any deduction;

(b) if the Contractor is not registered for gross payments under section 63(2) of the Act, the Project Co shall make a payment to the Contractor, subject to the deduction of the relevant percentage in accordance with section 61(1) of the Act, and thereupon Clause 35.10.6 below shall apply.

35.10.5 If any dispute arises between the Project Co and the Contractor as to whether any payment due by the Project Co to the Contractor under this Agreement is or is not a contract payment by virtue of the exemption in Regulation 23 of the Regulations, the Contractor shall provide such assistance as the Project Co reasonably requires in connection with any application to HM Revenue and Customs made pursuant to Clause 35.10.5 of the Project Agreement for a written ruling and until such ruling is received it shall be assumed that such payment is a contract payment and the

provisions of Clause 35.10 (*Construction Industry Tax Deduction Scheme*) shall apply accordingly.

35.10.6 The Project Co shall be entitled to make a deduction at the rate specified in section 61(1) of the Act or at such other rate as may be in force from time to time from the whole of any payment to the Contractor and not just that part of such payment which does not represent the direct cost to the Contractor or any other person of materials used or to be used in carrying out the construction operations to which the relevant payment relates. The Contractor shall provide such reasonable evidence of such costs as it is required to enable the Project Co to determine the proportion of the payment from which the statutory deduction should be made, or in the absence of this evidence, the Project Co shall make a reasonable estimate of such costs.

35.10.7 Where any error or omission has occurred in calculating or making any payment under this Clause 35.10 (*Construction Industry Tax Deduction Scheme*) then:

(a) in the case of an over deduction, the Project Co shall subject to Clause 75 (*Overriding Entitlements*) correct that error by repayment of the sum over deducted to the Contractor; and

(b) in the case of an under deduction, the Contractor shall correct that error or omission by repayment of the sum under deducted to the Project Co.

35.10.8 The Project Co shall send promptly to H M Revenue & Customs any returns required by the Legislation, and shall provide to the Contractor a payment statement (where appropriate) and/or such other information as may be required by the Legislation in relation to any contract payment.

35.10.9 If compliance with this Clause 35.10 involves the Project Co or the Contractor in not complying with any other of the terms of this Agreement, then the provisions of this Clause shall prevail.

36. NOT USED

37. NOT USED

38. RECORDS AND REPORTS

Records and Reports

The provisions of Schedule Part 19 (*Record Provisions*) shall apply to the keeping of records and the making of reports.

PART 10: TERMINATION

39. NOT USED

40. CONTRACTOR EVENT OF DEFAULT

Contractor Event of Default

40.1 For the purposes of this Agreement, Contractor Event of Default means any of the following events or circumstances:

Insolvency

40.1.1 the occurrence of any of the following events in respect of the Contractor or the Guarantor, namely:

(a) any arrangement or composition with or for the benefit of creditors (including any voluntary arrangement as defined in the Insolvency Act 1986) being entered into by or in relation to Contractor or the Guarantor;

(b) a receiver, administrator, administrative receiver or other encumbrancer taking possession of or being appointed over, or any distress, execution or other process being levied or enforced (and not being discharged within ten (10) Business Days) upon, the whole or any material part of the assets of any of the Contractor or the Guarantor;

(c) any of the Contractor or the Guarantor ceasing to carry on business;

(d) a petition being presented (and not being discharged within twenty (20) Business Days), or a resolution being passed or an order being made for the administration or the winding up, bankruptcy or dissolution of any of the Contractor or the Guarantor;

(e) if any of the Contractor or the Guarantor shall suffer any event analogous to the events set out in Clauses 40.1.1(a) to (d) in any jurisdiction in which it is incorporated or resident; or

(f) any corporate action, legal proceedings or other procedure or step is taken against the Contractor or the Guarantor (other than where such action, proceedings, procedure or steps are frivolous or vexatious or discharged or dismissed within 10 Business Days of commencement) in relation to:

(i) the general suspension of payments by the Contractor or the Guarantor (other than any suspension of payments as a result of a good faith dispute or in accordance with or envisaged by contract), a moratorium of any indebtedness (by reason of anticipated difficulties) or reorganisation (by way of voluntary arrangement, scheme of arrangement or other analogous insolvent reorganisation) of the Contractor or the Guarantor other than:

(A) a solvent liquidation; or

(B) a reorganisation (other than as contemplated above or any reorganisation of the Guarantor which does not also result in a Contractor Event of Default in accordance with Clause 40.1.15(c)).

Long stop

40.1.2 The Contractor fails to achieve Actual Completion by the Long Stop Date;

Progress

40.1.3 The Contractor fails to commence the Works fourteen (14) Business Days from the Commencement Date provided the failure to commence the Works is not caused by a breach by the Project Co of this Agreement or a breach by the Board of the Project Agreement;

40.1.4 Following a notice from the Project Co's Representative under Clause 14.4 (*the Programme*):

40.1.4.1 the Contractor fails to or is unable to submit to the Project Co's Representative and Funders' Technical Adviser within twenty (20) Business Days from the Project Co's Representative's notice a report and revised Programme identifying the measures that it will take to ensure completion of the Works;

40.1.4.1B the Project Co and the Contractor have not agreed within fifteen (15) Business Days following submission thereof of the report and the revised Programme submitted by the Contractor pursuant to Clause 14.4;

40.1.4.2 the Contractor does not, in the reasonable opinion of the Project Co's Representative or the Funders' Technical Adviser, commence implementation of the steps identified by the Contractor in the Rectification Plan within thirty (30) days of acceptance by the Project Co's Representative;

Limit of Liability

40.1.5 The Contractor failing to achieve the Actual Completion Date before the liability of the Contractor for liquidated damages under Clause 17B.2 (*Liquidated Damages*) exceeds the Liquidated Damages Cap;

Default

40.1.6 The Contractor:

(a) committing a breach of its obligations under this Agreement which has a material and adverse effect on the ability of the Contractor to comply with its obligations under this Agreement or which causes the Project Co to breach a provision under the Project Agreement where the breach of the Project Agreement is likely to give rise to termination of the Project Agreement;

(b) committing a breach of its obligations under this Agreement which has a material adverse effect on the Project or provision or performance of the Works or the services under the Service Contract; or

(c) or any Contractor Related Party, committing any negligent act, omission, breach or other default that causes a Funder Agreement Event of Default;

40.1.7 the Contractor abandoning the Works;

Health and safety

40.1.8 at any time the Contractor committing a material breach of its obligations under this Agreement (other than as a consequence of a breach by the Project Co of its obligations under this Agreement) which results in the criminal investigation, prosecution and conviction of the Contractor, any Contractor Party, the Project Co or the Project Co or any Project Co Party or the Board under the Health and Safety Regime (an "**H&S Conviction**") provided that an H&S Conviction of the Contractor, any Contractor Party, the Project Co or the Project Co Party or the Board shall not constitute a Contractor Event of Default if, within fourteen (14) Business Days from the date of the H&S Conviction (whether or not the H&S Conviction is subject to an appeal or any further judicial process), the involvement in the Construction Operations of each relevant Contractor Party (which in the case of an individual director, officer or employee shall be deemed to include the Contractor Party of which that person is a director, officer or employee) is terminated and where the relevant Contractor Party is a Subcontractor to the Contractor a replacement Subcontractor is appointed by the Contractor in accordance with Clause 57.5 (*Sub-contractors*);

In determining whether to exercise any right of termination or right to require the termination of the engagement of a Contractor Party pursuant to this Clause 40.1.8, the Project Co shall:

(a) act in a reasonable and proportionate manner having regard to such matters as the gravity of any offence and the identity of the person committing it; and

(b) give all due consideration, where appropriate, to action other than termination of this Agreement;

Change in Control

40.1.9 The occurrence of any Change in Control which is prohibited by Clause 58 (*Ownership Information and Changes in Control*);

Assignation

40.1.10 The Contractor failing to comply with the provisions of Clauses 57.2 (Assignation) or 57.5 (*Sub-contractors*) and such failure is likely to give rise to an equivalent breach by the Project Co under the Project Agreement;

Prohibited Act

40.1.11 The Contractor committing any Prohibited Act; or

Rectification Plan

40.1.12 The Contractor failing to implement, and continue to implement, diligently any course of action detailed in a Rectification Plan submitted to the Project Co under Clause 40.1.4 and approved by the Project Co under Clause 14.4 in accordance with the time periods set out in the Rectification Plan; or

Payment

40.1.13 The Contractor failing to pay any sum or sums due to the Project Co under this Agreement (which sums are not in dispute) which, either singly or in aggregate, exceed(s) one hundred thousand pounds (£100,000) (index linked) and such failure continues for thirty (30) Business Days from receipt by the Contractor of a notice of non payment from the Project Co; or

Insurance

40.1.14 A breach by the Contractor of its obligation to take out and maintain the insurances required by Clauses 53.1.

Security Documents

40.1.15 *Security Documents*

(a) The Contractor fails to procure any of the Parent Company Guarantee or the Performance Bond within fourteen (14) Business Days of a notice of default from the Project Co;

(b) the Parent Company Guarantee becoming invalid or unenforceable where the Contractor fails, within twenty (20) Business Days of the same becoming known, to provide a replacement valid and enforceable guarantee on materially the same terms as the Parent Company Guarantee (such replacement to be subject to the Project Co's prior written approval);

(c) any term of the Parent Company Guarantee is not complied with by the Guarantor, including failure by the Guarantor to procure that during the term of the Parent Company Guarantee the Net Tangible Assets of the BMG Group (as defined in the Parent Company Guarantee) does not fall below Pounds Sterling 150,000,000.00, where the Contractor fails, within fourteen (14) Business Days of the same becoming known, to provide a replacement guarantee which is acceptable to the Project Co;

(d) an event of default has occurred under Clause 5.8.5 or Clause 5.8.6.

Representations and Warranties

40.1.16 Any of the representations and warranties given by the Contractor are untrue or incorrect and which have a material adverse effect on the ability of the Contractor to perform its obligations under this Agreement, or on the Project or the performance of the Services under the Service Contract.

Notification

40.2 The Contractor shall notify the Project Co of the occurrence, and details, of any Contractor Event of Default and of any event or circumstance which is likely, with the passage of time or otherwise, to constitute or give rise to a Contractor Event of Default, in either case promptly on Contractor becoming aware of its occurrence.

Project Co's options

40.3 On the occurrence of a Contractor Event of Default, or within a reasonable time after the Project Co becomes aware of the same, and while the same is subsisting, the Project Co may:

40.3.1 in the case of the Contractor Events of Default referred to in Clauses 40.1.1 (*Insolvency*), 40.1.2 (*Long stop*), 40.1.4.1 or 40.1.4.2 (*Progress*), 40.1.5 (*Limit of Liability*), 40.1.6(c) (*Default*), 40.1.8 (*Health and safety*), 40.1.9 (*Change in Control*), 40.1.10 (*Assignation*), 40.1.11 (*Prohibited Act*), 40.1.13 (*Payment*), 40.1.15 (*Security Documents*) or 40.1.16 (*Representations and Warranties*) terminate this Agreement in its entirety by notice in writing having immediate effect;

40.3.2 in the case of any Contractor Event of Default referred to in Clauses 40.1.3 (*Progress*), 40.1.6(a) (*Default*), 40.1.6(b) (*Default*), and 40.1.7 (*Abandonment*), serve notice of default on the Contractor requiring the Contractor either:

(a) to remedy the Contractor Event of Default referred to in such notice of default (if the same is continuing) within ten (10) Business Days of such notice of default; or

(b) to put forward within ten (10) Business Days of such notice of default a reasonable programme (set out, if appropriate, in stages) for remedying the Contractor Event of Default. The programme shall specify in reasonable detail the manner in, and the latest date by, which such Contractor Event of Default is proposed to be remedied; and

40.3.3 in the case of any Contractor Event of Default referred to in Clause 40.1.14 *(Insurance)* serve notice of default on Contractor requiring the Contractor to remedy the Contractor Event of Default (if the same is continuing) within ten (10) Business Days of such notice of default.

Remedy provisions

40.4 Where Contractor puts forward a programme in accordance with Clause 40.3.2(b), the Project Co shall have thirty-one (31) Business Days from receipt of the same within which to notify the Contractor (acting reasonably) that it does not accept the programme, failing which the Project Co shall be deemed to have accepted the programme. Where the Project Co notifies the Contractor that it does not accept the programme as being reasonable, the parties shall endeavour within the following three (3) Business Days to agree any necessary amendments to the programme put forward. In the absence of agreement within three (3) Business Days Clause 40.5 shall apply and any dispute, including any question of whether the programme (as the same may have been amended by agreement) will remedy the Contractor Event of Default in a reasonable manner and within a reasonable time period (and, if not, what would be a reasonable programme) may be referred

by either party for resolution in accordance with Schedule Part 20 (*Dispute Resolution Procedure*).

40.5 If:

40.5.1 the Contractor Event of Default notified in a notice of default served under Clause 40.3.2 or Clause 40.3.3 (as the case may be) is not remedied before the expiry of the period referred to in Clause 40.3.2(a) or Clause 40.3.3 (as appropriate); or

40.5.2 where the Contractor puts forward a programme pursuant to Clause 40.3.2(b) which has been accepted by the Project Co or has been determined to be reasonable and the Contractor fails to achieve any element of the programme or the end date for the programme (as the case may be); or

40.5.3 any programme put forward by the Contractor pursuant to Clause 40.3.2(b) is rejected by the Project Co as not being reasonable, and the Dispute Resolution Procedure does not find against that rejection,

then the Project Co may terminate this Agreement in its entirety by written notice to the Contractor with immediate effect. Provided that for the purposes of Clause 40.5.2 if the Contractor's performance of the programme is adversely affected by the occurrence of Force Majeure or where the affected programme relates to the rectification by the Contractor of Defects pursuant to Clause 17A, and the cause of the Contractor's adverse performance of the programme is a Relief Event or an Excusing Cause then, subject to the Contractor complying with the mitigation and other requirements in this Agreement concerning Force Majeure, a Relief Event or an Excusing Cause (as the case may be), the time for performance of the programme or any relevant element of it shall be deemed to be extended by a period equal to the delay caused by Force Majeure, the Relief Event or the Excusing Cause (as the case may be) which is agreed by the parties or determined in accordance with Schedule Part 20 (*Dispute Resolution Procedure*). For the purposes of this Clause 40.5, an Excusing clause has the meaning set out in the Project Agreement but shall not apply herein to the extent caused or contributed to, directly or indirectly, by the Contractor or any Contractor Party.

Project Co's costs

40.6 The Contractor shall reimburse the Project Co for all reasonable costs incurred by the Project Co (including any amounts payable by the Project Co to the Board under the Project Agreement) in exercising any of its rights pursuant to this Clause 40 (*Contractor Event of Default*) (including, without limitation, any relevant increased administrative expenses). The Project Co shall take reasonable steps to mitigate such costs.

40.7 The Project Co shall not exercise, or purport to exercise, any right to terminate this Agreement except as expressly set out in this Agreement. The rights of the Project Co (to terminate or otherwise) under this Clause are in addition (and without prejudice) to any right which the Project Co may have to claim the amount of loss or damage suffered by the Project Co on account of the acts or omissions of the Contractor (or to take any action other than termination of this Agreement).

40A. PROJECT CO EVENTS OF DEFAULT

Project Co Event of Default

40A.1 For the purposes of this Agreement, Project Co Event of Default means any of the following events or circumstances:

Non Payment

40A.1.1 Failure of the Project Co to pay any undisputed sum or sums due to the Contractor under this Agreement which singly or in the aggregate exceed(s) two-hundred and fifty thousand pounds (£250,000) (index linked) and such failure continues for forty (40) Business Days from receipt by the Project Co of a notice of non-payment from the Contractor.

Insolvency

40A.1.2 The occurrence of any of the following events in respect of the Project Co, namely:

(a) any arrangement or composition with or for the benefit of creditors (including any voluntary arrangement as defined in the Insolvency Act 1986) being entered into by or in relation to the Project Co;

(b) a receiver, administrator, administrative receiver or other encumbrancer taking possession of or being appointed over, or any distress, execution or other process being levied or enforced (and not being discharged within ten (10) Business Days) upon, the whole or any material part of the assets of any of the Project Co;

(c) the Project Co ceasing to carry on business;

(d) a petition being presented (and not being discharged within twenty (20) Business Days), or a resolution being passed or an order being made for the administration or the winding up, bankruptcy or dissolution of the Project Co; or

(e) if the Project Co shall suffer any event analogous to the events set out in Clauses 40.1.1(a) to (d) in any jurisdiction in which it is incorporated or resident.

Contractor's Options

40A.2 Subject to the Contractor's obligations under the Funder's Direct Agreement with the Contractor, and the Contractor's obligations under the Board Collateral Warranty, on the occurrence of a Project Co Event of Default or within a reasonable time after the Contractor becomes aware of the same and while the same is still subsisting, the Contractor may, at its option serve notice on the Project Co of the occurrence (and specifying details) of such Project Co Event of Default. In case of a Project Co Event of Default referred to in Clause 40A.1.1, then if the relevant matter or circumstance has not been rectified or remedied by the Project Co (or otherwise) within forty (40) Business Days of such notice, the Contractor may serve a further notice on the Project Co terminating this Agreement with immediate effect. In the case of a Project Co Event of Default referred to in Clause 40A.1.2 the notice shall terminate this Agreement with immediate effect.

40A.3 The Contractor shall not exercise any right or purport to exercise any right to terminate this Agreement (or accept any repudiation of this Agreement) except as expressly set out in this Agreement.

41. TERMINATION RESULTING FROM FORCE MAJEURE

41.1 If, in the circumstances referred to in Clause 31 (*Force Majeure*), the parties have failed to reach agreement on any modification to this Agreement pursuant to Clause 31 (*Force Majeure*) within six (6) calendar months of the date on which the party affected serves notice on the other party in accordance with Clause 31 (*Force Majeure*) and where the Project Co has the right to terminate the Project Agreement in whole or in part, either party may at any time afterwards terminate this Agreement by written notice to the other party having immediate effect provided always that the effects of the relevant event of Force Majeure continues to prevent either party from performing any material obligation under this Agreement.

41.2 If the Board and the Project Co choose to keep the Project Agreement in force then the Project Co will, subject to the Project Co meeting any ongoing liabilities (including liabilities under the Funding Agreements and any liability for Force Majeure Liquidated Damages, pay the Contractor's reasonable costs during such extended period of Force Majeure. In these circumstances the Contractor will also not be able to exercise its rights to terminate this Agreement.

42. VOLUNTARY TERMINATION OF THE PROJECT AGREEMENT

42.1 The Contractor acknowledges that pursuant to Clause 42 of the Project Agreement, the Board is entitled to terminate the Project Agreement at any time on six (6) months' written notice to the Project Co. In the event that the Board exercises its right to terminate the Project Agreement pursuant to Clause 42 of the Project Agreement, this Agreement shall terminate in accordance with this Clause 42.1 on the same date as the Project Agreement terminates. Upon receipt of the Project Co of a notice under Clause 42 of the Project Agreement, the Project Co shall without delay pass on to the Contractor a copy of the Board's notice and the Project Co shall be entitled to direct the Contractor, where the Works (or any part of the Works) have not been commenced, to refrain from commencing any such Works (or to procure the same).

42.2 The Project Co shall be entitled to terminate this Agreement for any reason (including voluntary termination by the Board) at any time on written notice to the Contractor. In the event of notice being given by the Project Co in accordance with this Clause, the Project Co shall, at any time before the expiration of such notice, be entitled to direct the Contractor, where the Works (or any part or parts of the Works) have not been commenced, to refrain from commencing any such Works (or to procure the same).

42.3 Where the act or omission of the Contractor or any Contractor Party causes the Project Co to be in breach of the Project Agreement and the Board terminates the Project Agreement, this Agreement shall terminate automatically and compensation shall be payable in accordance with Part 3 of Schedule Part 17 (*Compensation on Termination*).

42A. DEFAULT TO THE BOARD

The Contractor shall do all things reasonably necessary as relate to the carrying out and completion of the Works to enable the Project Co to remedy any Project Co Event of Default (as that term is defined in the Project Agreement) and comply with Clause 40 of the Project Agreement.

43. NOT USED

44. CORRUPT GIFTS AND PAYMENTS

Prohibition on corruption

44.1 The term "**Prohibited Act**" means:

44.1.1 offering, giving or agreeing to give to any person including any public body (including the Board) or to any person employed by or on behalf of any person including any public body (including the Board) any gift or consideration of any kind as an inducement or reward:

(a) for doing or not doing (or for having done or not having done) any act in relation to the obtaining or performance of this Agreement or any other agreement with the public body (including the Board); or

(b) for showing or not showing favour or disfavour to any person in relation to this Agreement or any other agreement with the Project Co or public body (including the Board);

44.1.2 entering into this Agreement or any other agreement with the other public body (including the Board) in connection with which commission has been paid or has been agreed to be paid by the Contractor or on its behalf, or to its knowledge, unless before the relevant agreement is entered into particulars of any such commission and of the terms and conditions of any such agreement for the payment of such commission have been disclosed in writing to each of the Project Co and the Board;

44.1.3 committing any offence:

(a) under the Bribery Act 2010;

(b) under any Law creating offences in respect of fraudulent acts; or

(c) at common law, in respect of fraudulent acts in relation to this Agreement or any other agreement with the Project Co or other public body (including the Board); or

44.1.4 defrauding or attempting to defraud or conspiring to defraud any other public body (including the Board).

Warranty

44.2 The Contractor warrants that in entering into this Agreement it has not committed any Prohibited Act.

Remedies

44.3 If the Contractor or any Contractor Party (or anyone employed by or acting on behalf of them) commits any Prohibited Act, then the Project Co shall be entitled to act in accordance with Clauses 44.3.1 to 44.3.6 below:

44.3.1 if a Prohibited Act is committed by the Contractor or by an employee not acting independently of the Contractor, then the Project Co may terminate this Agreement with immediate effect by giving written notice to the Contractor;

44.3.2 if the Prohibited Act is committed by a Subcontractor or by an employee of the Subcontractor acting not independently of the Subcontractor, then the Project Co may give written notice to the Contractor of termination and this Agreement will terminate pursuant to Clause 40, unless within fifteen (15) Business Days of receipt of such notice the Contractor terminates the Subcontractor's employment and (if necessary) procures the performance of the relevant part of the Works by another person where relevant in accordance with Clause 57 (*Assignation and Sub-Contracting*);

44.3.3 if the Prohibited Act is committed by an employee of the Contractor acting independently of the Contractor then the Project Co may give written notice to the Contractor of termination and this Agreement will terminate, unless within fifteen (15) Business Days of receipt of such notice the Contractor terminates the employee's employment and (if necessary) procures the performance of the relevant part of the Works by another person;

44.3.4 if the Prohibited Act is committed by an employee of a Subcontractor acting independently of that Subcontractor, then the Project Co may give notice to the Contractor of termination and this Agreement will terminate pursuant to Clause 40, unless within fifteen (15) Business Days of receipt of such notice the Contractor procures the termination of the relevant employee's employment and (if necessary) the performance of the relevant part of the Works by another person;

44.3.5 if the Prohibited Act is committed by any other person not specified in Clauses 44.3.1 to 44.3.4 above, then the Project Co may give notice to the Contractor of termination and this Agreement will terminate unless within fifteen (15) Business Days the Contractor procures the termination of such person's employment and of the appointment of their employer (where such person is not employed by the Contractor or a Contractor Party) and (if necessary) procures the performance of the relevant part of the Works by another person; and

44.3.6 any notice of termination under this Clause shall specify:

(a) the nature of the Prohibited Act;

(b) the identity of the party who the Project Co believes has committed the Prohibited Act;

(c) whether the Project Co proposes to terminate this Agreement; and

(d) the date on which this Agreement will terminate in accordance with the applicable provisions of this Clause.

44.4 Without prejudice to its other rights or remedies under this Clause, the Project Co shall be entitled to recover from the Contractor:

44.4.1 the amount or value of any such gift, consideration or commission; and

44.4.2 any other loss sustained in consequence of any breach of this Clause.

Permitted payments

44.5 Nothing contained in this Clause shall prevent the Contractor or a Contractor Party from paying any proper commission or bonus to its employees within the agreed terms of their employment.

Notification

44.6 The Contractor shall notify the Project Co's Representative of the occurrence (and details) of any Prohibited Act promptly on the Contractor becoming aware of its occurrence.

Interim Management

44.7 [Not Used]

45. NOT USED

46. COMPENSATION ON TERMINATION

46.1 If this Agreement is terminated pursuant to Clause 41 (*Termination Resulting from Force Majeure*) or terminated in accordance with Clause 42.2 (*Voluntary Termination of the Project Agreement*) following termination of the Project Agreement pursuant to Clause 41) (*Termination Resulting from Force Majeure*) of the Project Agreement, then the Project Co shall pay to the Contractor compensation in accordance with Part 4 (*Consequences Of Termination For Force Majeure/Other Events*) of Schedule Part 17 (*Compensation on Termination*)

For the avoidance of doubt the Contractor shall not be entitled to recover any profit calculated on the value of any part of the Works remaining to be completed.

46.2 If this Agreement is terminated pursuant to Clause 40 (*Contractor Event of Default*), then compensation shall be payable in accordance with Part 2 of Schedule Part 17 (*Compensation on Termination*) where the Project Agreement is not terminated by the Board and in accordance with Part 3 of Schedule Part 17 (*Compensation on Termination*) where the Project Agreement is terminated by the Board.

46.3 If this Agreement is terminated pursuant to Clause 40A (*Project Co Events of Default*), then compensation shall be payable in accordance with Part 1 of Schedule Part 17 (*Compensation on Termination*).

46.4 Subject to Clause 46.1 if this Agreement is terminated pursuant to Clause 42 (*Voluntary Termination of the Project Agreement*), including where the Board terminates the Project Agreement for the convenience of the Board under the Project Agreement, then compensation shall be paid in accordance with Part 1 of Schedule Part 17 (*Compensation on Termination*).

46.5 If this Agreement is terminated pursuant to Clause 44.3 (*Termination for a Prohibited Act*) compensation shall be paid in accordance with Part 2 of Schedule Part 17 (*Compensation on Termination*) where the Project Agreement is not terminated by the Board, and in accordance with Part 3 of Schedule Part 17 (*Compensation on Termination*) where the Project Agreement is terminated by the Board.

Tax equalisation

46.6 Where a payment by way of compensation on termination (a "**Termination Payment**") or where a payment by way of indemnity or reimbursement (an "**Indemnity Payment**") under this Agreement (the party receiving such payment to be referred to in this Clause as the Receiving Party and the party making such payment to be referred to as the "**Paying Party**") and the Receiving Party is to be made has a Relevant Tax Liability in respect of such payment, then the amount of the Termination Payment (or where applicable the Indemnity Payment) to be made by the Paying Party to the Receiving Party shall be increased so as to ensure that the Receiving Party is in the same position (after account is taken of the Relevant Tax Liability) as it would have been in had it not been for such Relevant Tax Liability.

46.7 For the purposes of this Clause 46 (*Compensation on Termination*):

46.7.1 "**Relief**" shall mean any relief, allowance or deduction in computing profits or tax or a credit against, or right to repayment of, tax granted by or pursuant to any legislation for tax purposes;

46.7.2 a "**Relief derived from the Project**" is a Relief which arises in connection with the Project and includes any Relief arising as a consequence of the distribution of any amount obtained in respect of the Project (other than a Compensation Payment) by the Receiving Party (whether by way of interest, dividend or other distribution, repayment, reduction or redemption of capital or indebtedness or return of assets or otherwise); and

46.7.3 the Receiving Party shall be regarded as having a "**Relevant Tax Liability**" in respect of a Compensation Payment to the extent that:

(a) it has a liability for tax in consequence of or in respect of a Compensation Payment ("**Actual Liability**"); or

(b) it would have had a liability for tax within paragraph (a) above but for the utilisation of a Relief other than a Relief derived from the Project ("**Deemed Liability**").

46.8 In determining whether Receiving Party has a Relevant Tax Liability by reason of a Compensation Payment, it should be assumed that any Reliefs derived from the Project which are available to the Receiving Party (or would have been so available but for a surrender by the Receiving Party of such Reliefs by way of group or consortium relief) for offset against the Compensation Payment, or against tax in relation to the same, have been so offset to the maximum extent possible.

46.9 The Receiving Party shall keep the Paying Party fully informed of all negotiations with the HM Revenue and Customs in relation to any Relevant Tax Liability in respect of a Compensation Payment. The Receiving Party shall not agree, accept or compromise any claim, issue or dispute relating to such Relevant Tax Liability without the prior written consent of the Paying Party, which shall not be unreasonably withheld or delayed. The Paying Party may, if it considers in good faith that such action is justified having regard to the likely costs and benefits, direct the Receiving Party to resist, appeal, defend or otherwise dispute the Relevant Tax Liability in respect of the Compensation Payment, provided that the cost of any such dispute (including any interest or penalties incurred) shall be at the Paying Party's expense. However, if the Receiving Party obtains professional advice from an independent person with relevant expertise that any resistance, appeal, defence or other mode of dispute is not likely to result in any more beneficial position in relation to the Relevant Tax Liability, the Receiving Party

shall be entitled not to continue with such resistance, appeal, defence or other mode of dispute. Where any resistance, appeal, defence or other mode of dispute results in a more beneficial position in relation to the Relevant Tax Liability, an adjustment will be made to the amount payable under Clause 46.5 to reflect such outcome.

46.10 Any increase in the amount of a Compensation Payment which is payable under Clause 46.5 shall be paid on the later of five (5) Business Days after a demand therefore (together with evidence in sufficient detail for the Paying Party to satisfy itself of the Relevant Tax Liability and its calculation) is made by Receiving Party and:

46.10.1 in the case of an Actual Liability, five (5) Business Days before the date on which the relevant tax must be paid to the tax authority in order to avoid incurring interest and penalties; and

46.10.2 in the case of a Deemed Liability, five (5) Business Days before the date on which tax which would not have been payable but for the utilisation of the relevant Relief must be paid in order to avoid incurring interest or penalties (whether by Receiving Party or otherwise) and, for the purposes of determining when the Relief would otherwise have been utilised, Reliefs shall be regarded as utilised in the order in which they arise.

46.11 The parties acknowledge that under Clause 46.11 of the Project Agreement the Board shall have the right to pay the amount payable under Clause 46.6 (*Tax equalisation*) direct to HM Revenue and Customs in satisfaction of the relevant tax due by the Project Co provided that such payment shall discharge the Board's obligations to pay the Project Co only to the extent that payment by the Board to HM Revenue and Customs discharges the Project Co's obligations to pay tax to HM Revenue and Customs. For the avoidance of doubt, the Project Co's obligations pursuant to Clause 46.6 to 46.9 (*Tax equalisation*) are always subject to Clause 75 (*Overriding Entitlements*).

Rights of Set-Off

46.12 To avoid doubt, the Project Co's obligations to make any payment of compensation to the Contractor pursuant to this Clause are subject to the Project Co's rights of set-off.

Full and final settlement

46.13 Compensation:

46.13.1 (if any) paid pursuant to this Clause shall be in full and final settlement of any claim, demand and/or proceedings of the Contractor in relation to any termination of this Agreement (and the circumstances leading to such termination) and the Contractor shall be excluded from all other rights and remedies including set off in respect of any such termination; and

46.13.2 payable (if any) pursuant to this Clause 46 (*Compensation on Termination*) above shall be the sole remedy of the Contractor and the Contractor shall not have any other right or remedy in respect of such termination.

47. CONSEQUENCES OF TERMINATION

Continued performance

47.1 Subject to any exercise by the Project Co of its rights to perform, or to procure a third party to perform, the obligations of the Contractor, the parties shall continue to perform their obligations under this Agreement, notwithstanding the giving of any notice of default or notice of termination, until the Termination Date.

Transfer to Project Co of Assets, Contracts etc.

47.2 On the service of a notice of termination in accordance with this Agreement for any reason:

47.2.1 the Contractor shall cease all further work except for work that the Project Co has instructed the Contractor to perform for the protection of life or property or for the safety of the Works, and in so far as any transfer shall be necessary fully and effectively to transfer property to the Project Co or to such other person as the Project Co may direct, there shall transfer to, and there shall vest in, the Project Co or to such other person as such part of the Works and/or the Facilities as shall have been constructed and such items of the Plant and Equipment as shall have been procured by Contractor if the Project Co so elects:

47.2.2 save to the extent that the Contractor is instructed by the Project Co to remove from the Site any goods and materials, all goods and all materials on or near to the Site and/or Off-Site not yet incorporated in the Works for which the Contractor has been paid, shall remain available to the Project Co for the purposes of completing the Works;

47.2.3 the construction plant shall remain available to the Project Co for the purposes of completing the Works, subject to payment of the Contractor's reasonable charges;

47.2.4 [Not Used]

47.2.5 if the Project Co so elects, the Contractor and the Guarantor shall take whatever action is necessary for this Agreement to be novated or assigned to the Board or such other person as the Project Co may direct, provided that where termination occurs due to a Board Event of Default as defined in the Project Agreement the consent of the Contractor shall be required;

47.2.6 the Contractor shall, or shall procure that any Contractor Party shall (as the case may be), offer to sell to the Project Co at a fair value (determined as between a willing vendor and willing purchaser, with any disputes as to such fair value being determined pursuant to Schedule Part 20 (*Dispute Resolution Procedure*), free from any Encumbrance all or any part of the stocks of material and other assets, road vehicles, spare parts and other moveable property owned by the Contractor or any Contractor Party and reasonably required by the Project Co in connection with the operation of the Facilities or the provision of the Services;

47.2.7 [Not Used]

47.2.8 the Contractor shall use all reasonable endeavours to procure that the benefit of all manufacturer's warranties in respect of mechanical

and electrical plant and equipment used or made available by the Contractor under this Agreement and included in the Works are assigned, or otherwise transferred, to the Project Co or such other person as the Project Co directs with full title guarantee; and

47.2.9 the Contractor shall deliver to the Project Co, or such other person as the Project Co directs the records referred to in Clause 38 (*Records and Reports*) except where such documents are required by Law to be retained by the Contractor (in which case complete copies shall be delivered to the Project Co and the calculations, computer programmes and other software, drawings, manuals, models and other documents of a technical nature supplied by the Contractor under this Agreement).

47.3 The Contractor shall ensure that provision is made in all contracts of any description whatsoever to ensure that the Project Co will be in a position to exercise its rights, and the Contractor will be in a position to comply with its obligations, under Clause 47.2.

Transitional arrangements

47.4 On the termination of this Agreement for any reason, for a reasonable period both before and after any such termination, the Contractor shall have the following duties:

47.4.1 [Not Used]

47.4.2 the Contractor shall as soon as practicable remove from the Site and/or Off-Site, all property not acquired by the Project Co pursuant to Clause 47.2 (or not belonging to the Project Co or any Project Co Party) and if it has not done so within thirty-five (35) Business Days after any notice from the Project Co requiring it to do so the Project Co may (without being responsible for any loss, damage, costs or expenses) remove and sell any such property and shall hold any proceeds less all costs incurred to the credit of the Contractor;

47.4.3 [Not Used]

47.4.4 the Contractor shall as soon as practicable vacate the Site and Off-Site, and shall leave the Site and Off-Site, in a safe, clean and orderly condition.

47.5 [Not Used]

Continuing Obligations

47.6 Save as otherwise expressly provided in this Agreement or as already taken into account in the calculation of any termination sum or other payment of compensation on termination pursuant to this Agreement:

47.6.1 termination of this Agreement shall be without prejudice to any accrued rights and obligations under this Agreement as at the date of termination; and

47.6.2 termination of this Agreement shall not affect the continuing rights and obligations of the Contractor and the Project Co under Clauses 10 (*The Site and Off-Site*), 31 (*Force Majeure*), 34 (*Payment*), 35 (*VAT and Construction Industry Tax Deduction Scheme*), 38 (*Records and Reports*), 41 (*Termination Resulting from Force Majeure*), 42 (*Voluntary Termination of the Project Agreement*), 44

(*Corrupt Gifts and Payments*), 46 (*Compensation on Termination*), 47.2 and 47.4 (*Transitional Arrangements*), 49 (*Indemnities*), 53 (*Insurance*), 54 (*Exclusions and Limitations on Liability*), 55 (*Intellectual Property*), 56 (*Dispute Resolution Procedure*), 59 (*Mitigation*), 61 (*Confidentiality*), 64 (*Notices*), 74 (*Governing Law and Jurisdiction*), 75 (*Overriding Entitlements*) and 76 (*Project Co Breach and Non PA Entitlement Obligations*) or under any other provision of this Agreement which is expressed to survive termination or which is required to give effect to such termination or the consequences of such termination.

47A. FUNDERS' DIRECT AGREEMENT WITH THE BOARD

The Contractor acknowledges Clause 9.7 of the Funders' Direct Agreement with the Board and agrees that the Contractor's liability referred to in Clause 9.9 thereof shall be owed to the Project Co where and to the extent that the benefit of such liability is not retained by the Security Trustee and such liability shall be deemed to include:

47A.1 all payments that would have fallen due from it and under Schedule Part 17 (*Compensation on Termination*) of this Agreement; and

47A.2 discharge of all of the Contractor's obligations under this Agreement that would have fallen due on or consequent to termination,

in each case had the Board Collateral Agreement and/or Clause 47.2.5 *(Transfer to Project Co of Assets, Contracts etc.*) not applied and termination of this Agreement had occurred.

48. [NOT USED]

PART 11: INDEMNITIES, WARRANTIES & INSURANCE

49. INDEMNITIES

Contractor indemnities to Project Co

49.1 The Contractor shall indemnify and keep the Project Co indemnified at all times from and against all Direct Losses sustained by the Project Co (which the Contractor acknowledges may include any Direct Losses sustained by the Board including as a result of (i) any Direct Losses sustained by the Campus Parties and/or (ii) any Direct Losses sustained by the Board pursuant to the RIE Project Agreement) in consequence of:

49.1.1 any claim for, or in respect of, the death and/or personal injury of any employee of, or person engaged by, the Contractor, any Contractor Party, notwithstanding any act or omission of the Project Co, any Project Co Party, the Board or any Board Party;

49.1.2 any claim for, or in respect of, the death and/or personal injury of any third party (other than a person referred to in Clause 49.2.1) arising out of, or in the course of, the Construction Operations, save to the extent caused (or contributed to) by any Unreasonable Act by the Board or any Board Party, breach of any express provision of this Agreement by the Project Co, or of the Project Agreement by the Board or any Board Party, or any deliberate or negligent act or omission of the Project Co, the Board or any Board Party;

49.1.3 any physical loss of or damage to Board Assets or other property of the Project Co or any other Project Co Party arising by reason of any act or omission of the Contractor or any Contractor Party, save to the extent that such loss or damage arises out of the breach of

any express provision of this Agreement by the Project Co or any Project Co Party or any deliberate or negligent act or omission of the Project Co or any Project Co Party or to the extent that such loss or damage arises out of the breach of any express provision of the Project Agreement by the Board or any Board Party or any deliberate or negligent act or omission of the Board or any Board Party;

49.1.4 any loss of or damage to property or assets of any third party arising by reason of any act or omission of the Contractor or any Contractor Party, save to the extent that such loss or damage arises out of the breach of any express provision of this Agreement by the Project Co or any Project Co Party or any deliberate or negligent act or omission of the Project Co or any Project Co Party or to the extent that such loss or damage arises out of the breach of any express provision of the Project Agreement by the Board or any Board Party or any deliberate or negligent act or omission of the Board or any Board Party;

49.1.5 any breach of and/or any negligent act in complying with the terms of the Interface Proposals and/or paragraphs 4.4.3(b), 4.4.3(e), 4.5.1A, 4.5.12, 6.1.1, 6.1.2 and/or 7.6(j) of Sub-Section C of the Board's Construction Requirements and/or Schedule Part 31 *(Consort Interface with Campus Site and/or Campus Facilities)* of the Project Agreement, by the Contractor or any Contractor Party save to the extent such breach arises due to the breach of any express provision of this Agreement by the Project Co or any Project Co Party or of the Project Agreement by the Board or any Board Party or any deliberate or negligent act or omission of the Project Co, any Project Co Party or the Board or any Board Party;

49.1.6 any breach of Clause 9.5.1 *(Extent of Rights)* insofar as relates to the Reserved Rights set out in paragraphs 9 and 10 of Section 2 *(Reserved Rights)* of Schedule Part 5 *(Land Matters)* by the Contractor or any Contractor Party; and

49.1.7 the exercise by the Board under the Project Agreement of the Board's step in rights or the Boards Stop Incident rights to the extent that the exercise of the relevant rights was caused or contributed to by the breach of contract, negligence, delict or breach of statutory duty of the Contractor.

Project Co indemnities to the Contractor

49.2 Subject to Clause 75 (*Overriding Entitlements*) and to the extent that the Project Co is indemnified by the Board under the Project Agreement the Project Co shall indemnify the Contractor against loss incurred by the Contractor which falls within the scope of the indemnities given to the Project Co by the Board. The parties acknowledge that pursuant to Clause 49.2 of the Project Agreement, the Board shall indemnify and keep the Project Co indemnified at all times from and against all Direct Losses (as defined in the Project Agreement) sustained by the Project Co in consequence of:

49.2.1 any claim for, or in respect of, the death and/or personal injury of any employee of, or person engaged by, the Board or any Board Party notwithstanding any act or omission of the Project Co or any Project Co Party;

49.2.2 any claim for, or in respect of, the death and/or personal injury of any third party (other than a person referred to in Clause 49.1.1)

arising by reason of any act or omission of the Board or any Board Party in the course of provision of the Board Services, any Unreasonable Act by the Board or any Board Party, breach of any express provision of the Project Agreement by the Board or any Board Party or any deliberate act or omission of the Board or any Board Party, save to the extent caused (or contributed to) by any act or omission of the Project Co or any Project Co Party;

49.2.3 any physical damage to any part of the Facilities or any assets or other property of the Project Co or any Project Co Party arising by reason of any breach of any express provision of the Project Agreement by the Board or any Board Party or any deliberate act or omission of the Board or any Board Party, save to the extent caused (or contributed to) by any act or omission of the Project Co or any Project Co Party; and

49.2.4 any loss of or damage to property or assets of any third party arising by reason of any breach of any express provision of the Project Agreement by the Board or any Board Party or any deliberate act or omission of the Board or any Board Party, save to the extent caused (or contributed to) by any act or omission of the Project Co or any Project Co Party,

provided that in the case of Clauses 49.2.3 and 49.2.4 of the Project Agreement there shall be excluded from the indemnity given by the Board any liability:

(a) for the occurrence of risks against which and to the extent to which the Project Co is obliged to insure under the Project Agreement (but for the avoidance of doubt, not such liability to the extent within any applicable excess or deductible or over the maximum amount insured or to be insured under such insurance); or

(b) in respect of a matter which is a Compensation Event; or

(c) in respect of malicious damage.

49.2.5 Notwithstanding Clauses 19B (*Care of the Works*) and 53.22 (*Reinstatement*), the Project Co shall, subject to Clause 49.2 (*Project Co indemnities to the Contractor*), indemnify and keep the Contractor indemnified at all times from and against all expense, liability, loss, cost, claim, demand or proceedings sustained by the Contractor in consequence of:

(a) any claim for, or in respect of death and/or personal injury of any employee of, or person engaged by the Project Co notwithstanding any act or omission of the Contractor or any Contractor Party;

(b) any claim for, or in respect of, the death and/or personal injury of any third party arising out of any act or omission of the Project Co, save to the extent caused by breach of any express provision of this Agreement by the Contractor or any act or omission of the Contractor or any Contractor Party;

(c) any physical loss or damage to the Works or the Facilities or any assets or other property of the Contractor or any Contractor Party arising by reason of

any act or omission of the Project Co or a Project Co Party (other than the counterparties to the Interface Agreement), save to the extent that such loss or damage arises out of the breach of any express provision of this Agreement by the Contractor or any act or omission of the Contractor or any Contractor Party;

(d) any loss of or damage to property or assets of any third party arising by reason of any act or omission of the Project Co or a Project Co Party (other than the counterparties to the Interface Agreement), save to the extent that such loss or damage arises out of the breach of any express provision of this Agreement by the Contractor or any act or omission of the Contractor or any Contractor Party.

49.2.6 Where the Contractor suffers any loss in consequence of the matters referred to in Clauses 49.2.5(a) to 49.2.5(d) (inclusive), which is attributable to a matter in respect of which a Project Co Party other than any counterparty to the Interface Agreement (or any director, officer or employee of the Project Co) or other third party is liable to indemnify the Project Co in accordance with any agreement (including any of the Project Documents) or is a matter in respect of which the Project Co is entitled to claim under insurance, then the foregoing indemnity by the Project Co is given on the basis that such indemnity is treated as Contractor's Indemnification Entitlement and is subject to the provisions of Clauses 49.2.7 to 49.2.10 (inclusive) and Clause 77 (*Enforcement of Parallel Issues*).

49.2.7 Notwithstanding any other provision of this Agreement, the Contractor's entitlement to receive any indemnification by the Project Co pursuant to Clause 49.2.5 (herein referred to as the **"Contractor's Indemnification Entitlement"**) shall be subject to the provisions of 49.2.8 to 49.2.10 (inclusive).

49.2.8 Save where the claim arises out of any act or omission of the Project Co which is not caused or contributed to by any act or omission of the Contractor or any Contractor Party, where the Contractor considers that it is entitled to a Contractor's Indemnification Entitlement, the Project Co shall, at the request of the Contractor and in accordance with and subject to the provisions of Clause 77 (*Enforcement of Parallel Issues*) (with the necessary amendments made so that references in Clause 77 to the Project Agreement are deemed to be references to the agreement with the relevant Project Co Party or third party or insurance policy, as the case may be) exercise any corresponding rights it may have under, pursuant to or arising from the relevant agreement with the relevant Project Co Party or third party or insurance policy in relation to the recovery of the equivalent amount in respect of the Contractor's Indemnification Entitlement to which the Contractor believes it is entitled.

49.2.9 Save where the claim arises out of any act or omission of the Project Co which is not caused or contributed to by any act or omission of the Contractor or any Contractor Party, the Contractor's entitlement to any Contractor's Indemnification Entitlement shall arise only (i) where the occurrence of the event giving rise to the Contractor's Indemnification Entitlement and the amount of the payment to which the Contractor is seeking in respect thereof has

been established under the relevant agreement(s) and insurance policies and (ii) once the following conditions precedent have been satisfied:

(a) where the Project Co is entitled to insurance proceeds in respect of any Contractor's Indemnification Entitlement under insurances, Project Co must (i) first have recovered such sum and (ii) the recovered sum (or part thereof) must be identifiable as relating to the relevant Contractor's Indemnification Entitlement (as agreed or determined); and

(b) where the Project Co is entitled to indemnification from a third party, the Project Co must (i) first have recovered the relevant amount under the indemnity and (ii) the recovered sum (or part thereof) must be identifiable as relating to the relevant Contractor's Indemnification Entitlement (as agreed or determined).

49.2.10 For the avoidance of doubt, save where the claim arises out of any act or omission of the Project Co which is not caused or contributed to by any act or omission of the Contractor or any Contractor Party:

(a) and without prejudice to Clause 71, where the Project Co is not entitled to any equivalent indemnification and proceeds from insurance under the relevant agreement or insurance policy in respect of any claim by the Contractor for any Contractor's Indemnification Entitlement, the Contractor shall not be entitled to any such Contractor's Indemnification Entitlement in respect of such claim provided that the Project Co's inability to obtain recover under the relevant insurance policy is not due to the Project Co's negligent acts or omissions;

(b) where the Contractor claims any Contractor's Indemnification Entitlement under this Agreement, then the Contractor may not (other than in accordance with Clause 71) take any step or raise any action to enforce its rights to recover the same from the Project Co by way of set-off, counterclaim, damages or otherwise, unless and until the conditions precedent set out in Clauses 49.2.6 to 49.2.10 (inclusive) have been satisfied in respect of the Contractor's Indemnification Entitlement claimed by it or otherwise waived by the Project Co by written notice to the Contractor duly signed by two directors of the Project Co; and

(c) following the determination or agreement of a claim in respect of a Contractor's Indemnification Entitlement under the relevant agreement or insurance policy the Contractor shall be conclusively deemed to have waived any rights under this Agreement in respect of such claim in excess of the award arising from such determination or agreement under the relevant agreement or insurance policy. Accordingly, to avoid doubt, the Contractor shall take no steps or action pursuant to the Dispute Resolution Procedure or otherwise seeking to have the relevant claim resolved under this Agreement in any different manner from the resolution under the relevant

agreement or insurance policy and the Contractor hereby waives any right to do so.

Conduct of claims

49.3 This Clause 49.3 (*Conduct of claims*) shall apply to the conduct, by a party from whom an indemnity is sought under this Agreement, of claims made by a third person against a party having (or claiming to have) the benefit of the indemnity. The party having, or claiming to have, the benefit of the indemnity is referred to as the "**Beneficiary**" and the party giving the indemnity is referred to as the "**Indemnifier**". Accordingly:

49.3.1 if the Beneficiary receives any notice, demand, letter or other document concerning any claim for which it appears that the Beneficiary is, or may become, entitled to indemnification under this Agreement, the Beneficiary shall give notice in writing to the Indemnifier as soon as reasonably practicable and in any event within fifteen (15) Business Days of receipt of the same;

49.3.2 subject to Clauses 49.3.3, 49.3.4 and 49.3.5 below, on the giving of a notice by the Beneficiary pursuant to Clause 49.3.1 above, where it appears that the Beneficiary is or may be entitled to indemnification from the Indemnifier in respect of all (but not part only) of the liability arising out of the claim, the Indemnifier shall (subject to providing the Beneficiary with an indemnity to its reasonable satisfaction against all costs and expenses that it may incur by reason of such action) be entitled to dispute the claim in the name of the Beneficiary at the Indemnifier's own expense and take conduct of any defence, dispute, compromise, or appeal of the claim and of any incidental negotiations. The Beneficiary shall give the Indemnifier all reasonable co operation, access and assistance for the purposes of considering and resisting such claim;

49.3.3 with respect to any claim conducted by the Indemnifier pursuant to Clause 49.3.2 above:

(a) the Indemnifier shall keep the Beneficiary fully informed and consult with it about material elements of the conduct of the claim;

(b) the Indemnifier shall not bring the name of the Beneficiary into disrepute; and

(c) the Indemnifier shall not pay or settle such claims without the prior consent of the Beneficiary, such consent not to be unreasonably withheld or delayed;

49.3.4 the Beneficiary shall be free to pay or settle any claim on such terms as it thinks fit and without prejudice to its rights and remedies under this Agreement if:

(a) the Indemnifier is not entitled to take conduct of the claim in accordance with Clause 49.3.2 above; or

(b) the Indemnifier fails to notify the Beneficiary of its intention to take conduct of the relevant claim within fifteen (15) Business Days of the notice from the Beneficiary under Clause 49.3.1 above or notifies the Beneficiary that it does not intend to take conduct of the claim; or

(c) the Indemnifier fails to comply in any material respect with the provisions of Clause 49.3.3 above;

49.3.5 the Beneficiary shall be free at any time to give notice to the Indemnifier that it is retaining or taking over (as the case may be) the conduct of any defence, dispute, compromise or appeal of any claim (or of any incidental negotiations) to which Clause 49.3.2 above applies. On receipt of such notice the Indemnifier shall promptly take all steps necessary to transfer the conduct of such claim to the Beneficiary, and shall provide to the Beneficiary all reasonable co operation, access and assistance for the purposes of considering and resisting such claim. If the Beneficiary gives any notice pursuant to this Clause 49.3.5, then the Indemnifier shall be released from any liability under its indemnity under Clause 49.1 (*Contractor indemnities to Project Co*) or Clause 49.2 (*Project Co indemnities to the Contractor*) (as the case may be) and, without prejudice to any accrued liabilities, any liability under its indemnity given pursuant to Clause 49.3.2 in respect of such claim;

49.3.6 if the Indemnifier pays to the Beneficiary an amount in respect of an indemnity and the Beneficiary subsequently recovers (whether by payment, discount, credit, saving, relief or other benefit or otherwise) a sum which is directly referable to the fact, matter, event or circumstances giving rise to the claim under the indemnity, the Beneficiary shall forthwith repay to the Indemnifier whichever is the lesser of:

(a) an amount equal to the sum recovered (or the value of the saving or benefit obtained) less any out of pocket costs and expenses properly incurred by the Beneficiary in recovering the same; and

(b) the amount paid to the Beneficiary by the Indemnifier in respect of the claim under the relevant indemnity,

provided that there shall be no obligation on the Beneficiary to pursue such recovery and that the Indemnifier is repaid only to the extent that the amount of such recovery aggregated with any sum recovered from the Indemnifier exceeds any loss sustained by the Beneficiary (including for this purpose indirect or consequential losses or claims for loss of profits which are excluded by this Agreement from being recovered from the Indemnifier); and

49.3.7 any person taking any of the steps contemplated by Clauses 49.3.1 to 49.3.5 shall comply with the requirements of any insurer who may have an obligation to provide an indemnity in respect of any liability arising under this Agreement.

Mitigation – indemnity claims

49.4 To avoid doubt the provisions of Clause 59 (*Mitigation*) apply to any indemnity given under this Agreement and any such indemnity shall not apply to the extent that such part or parts of Direct Losses could have been reduced or avoided by the Beneficiary complying with the provisions of such Clause 59 (*Mitigation*).

49A. NOT USED

50. TAX ON INDEMNITY PAYMENTS

If any payment by one party under an indemnity in this Agreement is subject to income tax or corporation tax (or any tax replacing them) in the hands of the recipient, the recipient may demand in writing to the party making the payment that the payment shall be increased by such amount as would ensure that, after taking into account any such tax payable in respect of such additional amount, the recipient receives and retains a net sum equal to the amount it would have otherwise received had the payment not been subject to such tax. In relation to any such additional amount payable to the Project Co, the Project Co and the Contractor shall have the same rights and obligations as would apply to a Relevant Tax Liability under Clause 46.7.3 and Clauses 46.5 to 46.10 (inclusive) shall apply mutatis mutandis to the payment of the additional amount. The party making the payment shall pay such additional amount within eight (8) Business Days of receipt of such demand.

51. NOT USED

52. NOT USED

53. INSURANCE

The Contractor Insurances

53.1 The Contractor shall, at its own cost, procure that professional indemnity insurances, details of which are set out in Section 1 of Schedule Part 15 (*Insurance Requirements*) (the "**Contractor Professional Indemnity Insurance**") are taken out prior to the commencement of the Works and are maintained for the periods specified in Schedule Part 15 (*Insurance Requirements*).

If the Contractor's Professional Indemnity Insurance has not been taken out or is not being maintained in accordance with Clause 53.1, the Project Co may itself take out professional indemnity insurance to protect its interest in relation to those risks that have been assumed by the Project Co under the Project Agreement relating to those design matters and which have been assumed, in turn, by the Contractor under the terms of this Agreement and which would have been insured under the Contractor Professional Indemnity Insurance had such cover been maintained. Such insurance shall be arranged in the name of the Project Co as the insured and subject to cover being so available will also name the Contractor as an additional insured.

The limits of liability and terms and conditions of the cover shall be to the extent possible the same as those specified in Part 1 of Schedule Part 15 (*Insurance Requirements*) other than in relation to the definition of Insured which shall be amended to reflect this Clause 53.1. The premiums so paid by the Project Co shall be reimbursed by the Contractor on demand (as a debt due) together with interest at the Default Interest Rate from the date on which the Project Co requested payment from the Contractor to the date on which the debt is paid.

Without prejudice to the other provisions of this Clause 53 (*Insurance*), the Contractor shall, at all relevant times, at its own cost, effect and maintain in full force those insurances which it is required to effect by any applicable Law.

Project Co Insurances

53.1.1 The Project Co shall procure that the insurances, details of which are set out in Section 1 (*Policies to be taken out by contractor and maintained during the design and construction phase*) of Schedule Part 15 (*Insurance Requirements*) (the "**Project Co Insurances**"), are taken out prior to the commencement of the Works and are maintained for the periods specified in Section 1 (*Policies to be*

taken out by contractor and maintained during the design and construction phase) of Schedule Part 15 (*Insurance Requirements*).

53.1.2 [Not Used]

53.1.3 [Not Used]

53.2 The Contractor:

53.2.1 confirms, without prejudice to its duties, obligations and liabilities hereunder, that it has had the opportunity to check and shall be deemed to have satisfied itself as to the nature and extent of the Project Co Insurances.

53.2.2 undertakes that it shall (at all times during the Construction Operations) disclose to the Project Co in a timely manner all information which is material in relation to those insurances maintained by the Project Co under which the Contractor is an insured party; and

53.2.3 undertakes to comply (and to procure compliance by all Contractor Parties) with the terms and conditions of all insurance policies effected by the Project Co in connection with the Project and further undertakes that it will not by any act or omission cause any such insurance policy to become void or voidable or suspended or impaired in whole or in part.

53.3 Without prejudice to the other provisions of this Clause 53 (*Insurance*), the Contractor shall, at all relevant times, at its own cost, effect and maintain in full force those insurances which it is required to effect by any applicable Law.

53.4 All Project Co Insurances shall:

53.4.1 be maintained in the names of the parties specified in Section 2 of Schedule Part 15 (*Insurance Requirements*) and shall be composite policies of insurance (and not joint) unless stated otherwise in Schedule Part 15 (*Insurance Requirements*));

53.4.2 not used;

53.4.3 in so far as they relate to damage to assets (including the Facilities), cover the same for the full reinstatement value;

53.4.4 comply with the relevant provisions of Section 2 (*Policies to be Taken out by Project Co and Maintained During the Design and Construction Phase*) of Schedule Part 15 (*Insurance Requirements*).

53.4.5 provide for 30 days prior written notice of their cancellation, non–renewal or amendment;

53.4.6 in respect of the Physical Damage Policies provide for payment of any proceeds received to be applied in accordance with Clause 53.22 (*Reinstatement*);

53.4.7 [Not Used]

53.5 [Not Used]

Subrogation and Vitiation

53.6 [Not Used]

53.7 Neither party shall take any action or fail to take any reasonable action or (in so far as it is reasonably within its power) permit or allow others to take or fail to take any action (including failure to disclose any fact) as a result of which any of the Insurances placed pursuant to this Agreement may be rendered void, voidable, unenforceable or suspended or impaired in whole or in part or which may otherwise render any sum paid out under any relevant policy repayable in whole or in part.

Evidence of Insurance

53.8 The Project Co shall provide to the Contractor:

53.8.1 [Not Used]

53.8.2 evidence that the premiums payable under all Project Co Insurances have been paid and that the insurances are in full force and effect in accordance with the requirements of this Clause 53.1.1 (*Project Co Insurances*) and Part 2 of Schedule Part 15 (*Insurance Requirements*).

53.9 The Contractor shall provide to the Project Co:

53.9.1 [Not Used]

53.9.2 evidence that the premiums payable under all insurance policies to be placed by the Contractor pursuant to Clause 53.1 have been paid and that the insurances placed by the Contractor pursuant to this Agreement are in full force and effect in accordance with the requirements of this Clause 53 (*Insurance*) and Part 1 of Schedule Part 15 (*Insurance Requirements*).

53.10 [Not Used]

53.11 [Not Used]

53.11A [Not Used]

53.12 [Not Used]

Acceptance and compliance

53.13 [Not Used]

53.14 Neither failure to comply, nor full compliance, with the insurance provisions of this Agreement shall relieve the Contractor of its liabilities and obligations under this Agreement.

Uninsurable Risks

53.15 The Contractor acknowledges the provisions of Clauses 53.14 and 53.15 of the Project Agreement and agrees that if the Project Agreement terminates in accordance with Clause 53.14.2(a) or 53.14.2(b) thereof, then this Agreement shall also terminate and compensation shall be paid in accordance with Part 3 of Schedule Part 17 (*Compensation on Termination*).

Risk Management

53.16 With effect from the date of this Agreement, the Project Co and the Contractor shall each designate or appoint an insurance and risk manager and notify details of the same to the other party. Such person shall:

53.16.1 be responsible for dealing with all risk management matters on behalf of its appointing or designating party including (without limitation) ensuring compliance by that party with this Clause 53.16;

53.16.2 advise and report to that party on such matters; and

53.16.3 ensure that any report or survey conducted by any insurer of any relevant procedures in relation to the Project is disclosed to the parties.

53.17 Without prejudice to the provisions of Clause 53.16, the parties shall notify one another of any circumstances which may give rise to a claim of a value equal to or in excess of fifty thousand pounds (£50,000) (index linked) under the relevant insurances within three (3) Business Days of becoming aware of the same (or earlier, if so requested by the terms of the relevant insurance policy). If any insurer disputes any such claim, the insuring party shall provide the other party with full details of any disputed claim and the parties shall liaise with one another to ensure that the relevant claim is preserved or pursued. The Contractor shall notify the Project Co of any circumstances which may give rise to a claim with a value less than fifty thousand pounds (£50,000) (index linked) under the Project Co Insurances as soon as reasonably practicable.

Application of Proceeds

53.18 All insurance proceeds received under the Project Co Insurances Insurance shall be paid into the Insurance Proceeds Account and shall be applied in accordance with the Project Agreement and in accordance with the Insurance Proceeds Accounts Agreement as defined in the Project Agreement.

53.19 Subject to the provisions of the Funders' Direct Agreement and the approval of the Project Co and its Funders and to Clause 53.18 and Clause 53.22 *(Reinstatement)* an amount equal to the proceeds of any Project Co Insurances to which the Project Co is entitled (as agreed with the relevant insurer and the Project Co or determined by the applicable dispute resolution tribunal under the relevant policy) in respect of the Contractor's insured interest under the Project Co Insurances (Proceeds) shall, to the extent of recovery made in respect of the Contractor's insurable interest, be paid by the Project Co to the Contractor and used by the Contractor:

53.19.1 [Not Used]

53.19.2 so as to ensure the performance by the Contractor of its obligations under this Agreement, including where necessary the reinstatement, restoration or replacement of the Facilities, assets, materials or goods affected by the event giving rise to the insurance claim and consequent entitlement of the Project Co to the Proceeds.

53.20 Payments due pursuant to Clause 53.19 shall be made in accordance with Clauses 75.3 which shall be read as if the reference to "PA Entitlement" was deleted, the reference to "Price Adjustments" referred to "payments due pursuant to Clause 53.19", the reference to "the Dispute Resolution Procedure" referred to "a binding determination by the applicable dispute resolution tribunal under the relevant policy" and references to the "Board" were references to the "relevant

insurer" and provided that the other payment conditions contained in Clause 53.20A below have been satisfied.

53.20A The other payment conditions shall be that payment has fallen due by the application of Clause 34 (*Payment*), read with the necessary adjustments to reflect any reinstatement works and including a fair and reasonable allocation of such works and any payment referred to under Clause 53.19 in respect of such works to the Progress Milestone Schedule and the Maximum Payment Schedule.

53.20B The Project Co shall diligently and expeditiously pursue any claim under the "Contractors' All Risk" insurance in respect of any loss or damage for which the Contractor is responsible under this Agreement. The Contractor shall reasonably assist the Project Co in connection with the pursuit of any claim under the "Contractors' All Risk" insurance.

53.21 If the proceeds of any insurance claim are insufficient to cover the settlement of such claims, the Contractor will make good any deficiency forthwith. Nothing in this Clause 53.21 shall limit any right of the Contractor provided pursuant to an express term of this Agreement.

53.21A The Contractor shall not be obliged to reinstate any insured loss or damage to the Works where and to the extent that the Project Co elects not to pay any amount due to the Contractor under Clause 53.19.

53.22 **Reinstatement**

53.22.1 All insurance proceeds received under any Physical Damage Policy shall be applied to repair, reinstate and replace each part or parts of the Facilities in respect of which the proceeds were received.

53.22.2 Subject to Clause 53.22.4, at the request of the Project Co, the Contractor will provide the Project Co with all necessary assistance in connection with the performance of the Project Co's obligations (including the development of any Reinstatement Plan) under Clause 53.22.2(a) of the Project Agreement. The Contractor shall (unless otherwise required by the Project Co) comply with any relevant Reinstatement Plan and shall perform and discharge all of the Project Co's obligations in respect thereof.

53.22.3 Subject to Clause 53.22.4, where Clause 53.22.2 of the Project Agreement does not apply because the Relevant Incident (as defined in the Project Agreement) results in a claim being made, or proceeds being received, for an amount that is equal to, or less than the threshold of £250,000 (index linked) then, after any inspection of loss or damage as required by the insurers in any relevant policy of insurance, or when otherwise so instructed by the Project Co (and subject to the Funder Direct Agreement), the Contractor shall proceed diligently to reinstate such loss and damage.

53.22.4 Without prejudice to Clause 49.2.5 (*Project Co indemnities to the Contractor*) Clauses 53.22.2 and 53.22.3 shall apply for the period until the Actual Completion Date. Subject to Clause 53A (*Uninsured Losses and Third Party Damage*), the Contractor shall not be entitled to any payment in respect of reinstatement work under Clauses 53.22.2 and 53.22.3 other than in accordance with Clause 53.20 and subject to the loss payee and other rights of the Funders pursuant to the Funder Direct Agreement PROVIDED THAT the Contractor shall be released from its obligations to reinstate any loss or damage pursuant to Clauses 53.22.2 and 53.22.3:

(a) in respect of loss or damage being caused by risks not borne by the Contractor as referred to in Clauses 19B (*Care of the Works*); and

(b) to the extent and as from the date that the Funders notify the Contractor of the Funders' intention to retain for their own account any such monies,

where the Project Co fails to provide an amount equal to the proceeds.

53.22.5 Once the Reinstatement Plan has been issued, and save to the extent that there are elements that are still to be agreed with the Board, the Contractor shall proceed diligently and timeously with the reinstatement work there set out, including removing and disposing of debris provided that the Contractor shall be released from its obligation to reinstate any loss or damage pursuant to this Clause 53.22.5 to the extent and as from the date that the Funders notify the Contractor of their intention to retain for their own account any such monies.

53.22.6 Nothing in this Agreement shall oblige the Contractor to take out insurance in respect of a risk for which after the date of this Agreement:

(a) insurance is not available within the worldwide insurance market with reputable insurers of good standing in respect of that risk; or

(b) the terms and/or conditions offered in respect of that risk are such that the risk is not generally being insured against in the worldwide insurance market with reputable insurers of good standing provided that nothing in this Clause 53.22.6 will relieve the Contractor of any of its other obligations in respect of such risk in this Agreement. For the avoidance of doubt, the Contractor shall not be entitled to any payment or indemnity from the Board or the Project Co on the occurrence of such a risk.

53.22.7 Nothing in this Agreement shall oblige the Project Co to take out and/or maintain insurance in respect of a risk which is not an Uninsurable Risk but for which after the date of this Agreement:

(a) insurance is not available within the worldwide insurance market with reputable insurers of good standing of that risk; or

(b) the terms and/or conditions offered in respect of that risk are such that the risk is not generally being insured against in the worldwide insurance market with reputable insurers of good standing.

53.22.8 Where insurance proceeds are to be used, in accordance with this Agreement, to repair, reinstate or replace any Facilities, the Contractor shall carry out the work (the **Reinstatement Works**) in accordance with the Board's Construction Requirements so that on completion of the work, the provisions of this Agreement are complied with.

53.22.9 If and to the extent that a breach by the Contractor of its obligations under Clause 53.22.2 leads to a delay in the completion of the Reinstatement Works, any entitlement that the Contractor has to relief under Clause 30 *(Relief Events)* shall be suspended.

53A. UNINSURED LOSSES AND THIRD PARTY DAMAGE

53A.1 Subject to Clauses 49.2.5 (*Project Co indemnities to the Contractor*) and 53.21, where a party is responsible for any risk, loss or damage under this Agreement they shall also be responsible for any insurance excesses, deductibles and any other uninsured amounts and amounts in respect of which recovery from insurers is not made.

53A.2 The Contractor shall not be relieved from liability under this Agreement as a consequence of any of the risks and liabilities under the Agreement not being covered by insurance (including insurance excesses, deductibles and any other uninsured amounts).

53A.3 Subject to Clauses 49.2.5 (*Project Co indemnities to the Contractor*) and 53.21, the Contractor shall assume and accept full risk of any loss or damage caused to the property of the Contractor or the property of any Contractor Party by the Project Co, any Project Co Party or any third party.

53A.4 Without prejudice to Clauses 49.2.5 (*Project Co indemnities to the Contractor*) and 53.21, as between the Project Co and the Contractor, the Contractor is to bear any loss:

(a) suffered by the Contractor, or any Contractor Party which is caused by acts or omissions of any third party;

(b) suffered by the Contractor, the Project Co, Project Co Parties, the Board and the Board Parties caused by or resulting from the presence of any person not entitled to be on the Site prior to the Actual Completion Date,

including, without limitation, property damage, personal injury or death or any loss of income save to the extent that the loss arises out of the breach of any express provision of this Agreement by the Project Co.

54. EXCLUSIONS AND LIMITATIONS ON LIABILITY

Exclusions

54.1 The indemnities under this Agreement shall not apply and without prejudice to the provisions of Schedule Part 17 (*Compensation on Termination*) there shall be no right to claim damages for breach of this Agreement, in delict or on any other basis whatsoever to the extent that any loss claimed by either party is for loss of profits, loss of use, loss of production, loss of business or loss of business opportunity or is a claim for consequential loss or for indirect loss of any nature ("**Indirect Losses**") suffered or allegedly suffered by either party. The Contractor acknowledges and agrees that liquidated damages for delay and for Force Majeure, Relief Event liquidated damages, compensation on termination and sums which the Project Co is liable to pay to any third party by reason of any indemnity given by the Contractor to the Project Co or any Project Co Party or any loss of the Project Co arising by reason of the operation of the Project Documents shall be deemed to be direct losses.

54.2 The Project Co shall not be liable in delict to the Contractor or any Contractor Party in respect of any negligent act or omission of the Project Co and/or any Project Co Party relating to or in connection with this Agreement and the Contractor shall procure that no Contractor Party shall bring such a claim against

the Project Co or any Project Co Party. The Contractor acknowledges that the Board shall not be liable in delict to the Contractor or any Contractor Party in respect of any negligent act or omission of the Board or any Board Party or the Project Co or any other Project Co Party relating to or in connection with this Agreement and the Contractor shall procure that neither it nor any Contractor Party shall bring such a claim against the Board or any Board Party or the Project Co or any Project Co Party. The Contractor has accepted this on the basis that it and each Contractor Party will cover the risk of negligent acts or omissions by insurance or in such other manner as it (or they) may think fit.

No Double Recovery

54.3 [Not Used]

54.4 Subject to Clause 29 (*Delay Events*) and any other express right of the Contractor pursuant to this Agreement, the Contractor's sole remedy in respect of any breach of this Agreement which is a Compensation Event shall be pursuant to Clause 29 (*Delay Events*).

54.5 Nothing in Clause 54.3 shall prevent or restrict the right of the Project Co to seek interdict or a decree of specific implement or other discretionary remedies of the court.

54.6 Notwithstanding any other provision of this Agreement, neither party shall be entitled to recover compensation or make a claim under this Agreement or any other agreement in relation to the Project in respect of any loss that it has incurred (or any failure of the other party) to the extent that it has already been compensated in respect of that loss or failure pursuant to this Agreement or otherwise.

54.7 Neither party shall have the right to terminate this Agreement for breach of contract save as expressly set out in this Agreement.

54A. LIMITS ON CONTRACTOR'S LIABILITY

54A.1 Subject only to Clauses 54A.3 and 54A.7, the aggregate liability of the Contractor to the Project Co as a result of breach of, or termination of, this Agreement whether following the termination of the Project Agreement or otherwise caused by any act or omission of the Contractor or arising after termination of this Agreement and in respect of Defects in Terminated Works (including any such liability arising under or in connection with this Agreement or arising in tort, delict (including any liability for negligence)) shall not exceed the Contractor Liability Cap.

54A.2 [Not Used]

54A.3 The Contractor does not exclude or restrict its liability for any of the following and no liability for the same shall be taken into account in determining whether the limit of liability under Clauses 54A.1 has been reached or exceeded:

54A.3.1 to the extent that the Contractor is entitled to recover amounts corresponding to such liability pursuant to insurance policies required to be effected and maintained by either party in accordance with this Agreement or Law (but not, for the avoidance of doubt, any excesses relating to such recovery) or in respect of which the Contractor would have been entitled but for any act or omission of the Contractor or any Contractor Party;

54A.3.2 fraud, fraudulent misrepresentation, Prohibited Act, corruption or wilful default on the part of the Contractor;

54A.3.3 its indemnity obligations set out in Clause 49 (*Indemnities*) and Clause 55.5;

54A.3.4 abandonment of the Works;

54A.3.5 liabilities for personal injury or death;

54A.3.6 any interest payable or reasonably and properly incurred enforcement costs in respect of late payment of sums due to the Project Co from the Contractor;

54A.3.7 breach of statutory duty by the Contractor or any Contractor Party;

54A.3.8 adjudicator's fees and expenses which the Contractor is liable for including any amounts paid to the Project Co in respect of the costs reasonably and properly incurred by the Project Co in respect of enforcing or defending its rights under the Project Documents; and

54A.3.9 any liability for costs incurred by the Contractor (including any liabilities to its subcontractors, consultants, suppliers or agents acting under its instruction) in the discharge of its obligations to carry out and complete the Works and/or rectify any Snagging Matters or Defects in the Works prior to termination of this Agreement.

54A.4 Without prejudice to Clauses 17B (*Liquidated Damages*) and 30 (*Relief Events*), the Contractor's liability under this Agreement shall include, without limitation, Direct Losses, but the Contractor shall not be liable for Indirect Losses under or in connection with this Agreement.

54A.5 The Contractor's obligations and liabilities arising under or pursuant to this Agreement or in any way connected to this Agreement or the Works including any latent defects in the Works or the performance or non-performance of the Contractor's obligations or any liability in tort or delict (including negligence) on the part of the Contractor or any Contractor Party shall, expire twelve 12 years following the Actual Completion Date, save in respect of claims notified to the Contractor prior to the expiry of such period.

54A.6 The Project Co shall not be liable for indirect or consequential losses under or in connection with this Agreement.

54A.7 The Contractor Liability Cap shall be adjusted as follows:

54A.7.1 Subject to Clauses 54A.7.2 and 54A.7.3, no amount paid by the Contractor to a party to the Interface Agreement, other than to the Project Co (or any party to whom the Project Co's rights under this Agreement have been transferred pursuant to the Funding Agreements following such transfer) shall count towards the consumption of the Contractor Liability Cap.

54A.7.2 Where the Contractor pays to, or suffers to be withheld any amount by, the Project Co pursuant to this Agreement (the "**Claimed Amount**") and such Claimed Amount counts towards the consumption of the Contractor Liability Cap and the Contractor subsequently recovers the whole or part of such Claimed Amount from any other party to the Interface Agreement in good faith (the "**Recovered Amount**"), the Contractor Liability Cap shall be reinstated by the Recovered Amount, save where the Recovered Amount exceeds the Claimed Amount in which case the Contractor Liability Cap shall be reinstated by the Claimed Amount.

54A.7.3 Where in relation to any liability of the Contractor to the Project Co under this Agreement, any other party to the Interface Agreement pays to, or suffers to be withheld any amount by, the Project Co (the "**Project Co Claimed Amount**") and such party subsequently recovers the whole or part of the Project Co Claimed Amount from the Contractor as a PassDown Liability under the Interface Agreement, in good faith and on an arms' length basis which establish that the Contractor was liable for such amount (the "**Paid Amount**"), such Paid Amount shall count towards the consumption of the Contractor Liability Cap, provided that the amount of the Paid Amount which counts towards the consumption of the Contractor Liability Cap shall not exceed the Project Co Claimed Amount.

54A.7.4 Any amounts recovered by the Project Co from the Guarantor under the Parent Company Guarantee or from the Performance Bond Provider in respect of liabilities included from time to time under this Agreement or in respect of any liability of ProjectCo under Clause 6.1(a) of the Interface Agreement shall count towards the consumption of the Contractor Liability Cap.

PART 12: MISCELLANEOUS

55. INTELLECTUAL PROPERTY

Project Data

55.1 The Contractor shall make available to the Project Co and to the Board free of charge (and hereby irrevocably licences the Project Co and to the Board to use) all Project Data that might reasonably be required by the Board and the Project Co and the Contractor shall ensure that it can make the Project Data available to the Project Co and the Board on these terms, for the purposes of:

55.1.1 the Board or the Project Co carrying out the Board Services (and its operations relating to the performance of the Board Services), its duties under the Project Agreement and/or any statutory duties that the Board may have;

55.1.2 following termination of this Agreement, the design or construction of the Facilities, the operation, maintenance or improvement of the Facilities and/or the carrying out of operations the same as, or similar to, the Project Operations; and

55.1.3 the Project Co carrying out its duties under the Project Agreement and this Agreement,

(together the "**Approved Purposes**") and in this Clause "use" shall include the acts of copying, modifying, adapting and translating the material in question and/or incorporating them with other materials and the term "the right to use" shall be construed accordingly.

Intellectual Property Rights

55.2 The Contractor:

55.2.1 hereby grants to each of the Project Co and the Board, free of charge, an irrevocable, non-exclusive and transferable (but only to any assignee or transferee of any rights or benefits under the Project Agreement or upon or at any time following termination of this Agreement or the Project Agreement) licence (carrying the right to grant sub-licences) to use the Intellectual Property Rights which are or become vested in the Contractor; and

55.2.2 shall, where any Intellectual Property Rights are or become vested in a third party, use all reasonable endeavours to procure the grant of a like licence to that referred to in Clause 55.2.1 above to the each of the Project Co and the Board,

in both cases, solely for the Approved Purposes.

The Contractor shall use all reasonable endeavours to ensure that any Intellectual Property Rights created, brought into existence or acquired during the term of this Agreement are licensed to the Project Co or shall vest, and remain vested throughout the term of the Project Agreement, in the Project Co and the Contractor shall enter into appropriate agreements with any Contractor Party (or other third parties) that may create or bring into existence, or from which it may acquire, any Intellectual Property Rights.

Maintenance of data

55.3 To the extent that any of the data, materials and documents referred to in this Clause are generated by or maintained on a computer or similar system, the Contractor shall: (a) use all reasonable endeavours to procure for the benefit of the each of the Project Co and the Board, at no charge or at the lowest reasonable fee, the grant of a licence or sub-licence for any relevant software to enable each of the Project Co and the Board or its nominee to access and otherwise use (subject to the payment by the Project Co of the relevant fee, if any) such data for the Approved Purposes. As an alternative, the Contractor may provide such data, materials or documents in a format which may be read by software generally available in the market at the relevant time or in hard copy format; and (b) enter into the NCC's then current multi-licence escrow deposit agreement or standard single licence escrow deposit agreement as appropriate in each case.

55.4 The Contractor shall ensure the back-up and storage in safe custody of the data, materials and documents referred to in Clause 55.3 in accordance with Good Industry Practice. Without prejudice to this obligation, the Contractor shall submit to the Project Co's Representative for approval its proposals for the back-up and storage in safe custody of such data, materials and documents and the Project Co shall be entitled to object if the same is not in accordance with Good Industry Practice. The Contractor shall comply, and shall cause all Contractor Parties to comply, with all procedures to which the Project Co's Representative has given its approval. The Contractor may vary its procedures for such back-up and storage subject to submitting its proposals for change to the Project Co's Representative, who shall be entitled to object on the basis set out above.

Claims

55.5 Where a claim or proceeding is made or brought against either or both of the Project Co or the Board which arises out of the infringement of any rights in or to any Intellectual Property (other than any Disclosed Data) or because the use of any materials, Plant, machinery or equipment in connection with the Construction Operations infringes any rights in or to any Intellectual Property of a third party then, unless such infringement has arisen out of the use of any Intellectual Property by or on behalf of the Project Co otherwise than in accordance with the terms of this Agreement, the Contractor shall indemnify each of the Project Co and the Board at all times from and against all such claims and proceedings and the provisions of Clause 49.3 (*Conduct of claims*) shall apply.

55.6 Each Party shall promptly notify the other Party if any claim or demand is made or action brought against the notifying Party for infringement or alleged infringement of any Intellectual Property Rights which may affect the Project Operations or the Services.

56. DISPUTE RESOLUTION PROCEDURE

Except where expressly provided otherwise in this Agreement, any dispute arising out of or in connection with this Agreement shall be resolved in accordance with the procedure set out in Schedule Part 20 (*Dispute Resolution Procedure*).

57. ASSIGNATION AND SUB-CONTRACTING

Assignation

57.1 This Agreement and any other agreement in connection with the Project to which both the Contractor and the Project Co are a party shall be binding on, and shall enure to the benefit of, the Project Co and the Contractor and their respective statutory successors and permitted transferees and assignees.

57.2 The Contractor shall not, without the prior written consent of the Project Co and of the Funders (the Funders having an absolute discretion as to whether to give consent), assign, novate transfer, sub-contract or otherwise dispose of any interest in this Agreement, and any other contract entered into by the Contractor for the purposes of performing its obligations under this Agreement and the Contractor shall not grant or purport to grant any Security Interest over or in relation to this Agreement or any other contract except with the prior written consent of the Project Co in its absolute discretion.

57.3 [Not Used]

57.4 The Project Co shall be freely entitled without the Contractor's consent to assign (including by way of security or charge) the benefit of this Agreement and/or of any benefit arising from this Agreement and any such assignation or charge may include the right to make second and subsequent assignations or charges (including in order to perfect or enforce such assignation or charge).

Sub-contractors

57.5 The Contractor shall not, without the prior written consent of the Project Co, which consent shall not be unreasonably withheld, without prejudice to Clause 57.1, sub-contract all (or substantially all) of their obligations under or in this Agreement.

57.6 [Not Used]

57.7 The Project Co acknowledges that the Contractor shall engage consultants and sub-contractors to perform elements of the Works, but the Contractor shall be and shall remain liable under this Agreement for all aspects of the design and construction of the Works subcontracted and for all acts, defaults, omissions or neglects of any sub-contractor, the Contractor's agents, servants or other works people which shall include any person employed by any of them.

57.7A The Project Co (and the Funders) have approved the identity of the Key Sub-Contractors and of the Design Team. If the Contractor proposes not to employ or to replace any of the Key Sub-Contractors or the Design Team it shall require the prior written consent of the Project Co (and the Funders), such consent not to be unreasonably withheld or delayed. The Contractor shall perform its obligations under, and observe all of the provisions of, the Key Subcontracts and Design Team Appointments (each an "**Ancillary Document**") to which it is a party and shall not:

57.7.A.1 terminate or agree to the termination of all or part of any Ancillary Document;

57.7.A.2 make or agree to any material variation of any Ancillary Document;

57.7.A.3 in any material respect depart from its obligations (or waive or allow to lapse any rights it may have in a material respect); or

57.7.A.4 enter into (or permit the entry into by any other person of) any agreement replacing all or part of (or otherwise materially and adversely affecting the interpretation of) any Ancillary Document,

unless the proposed course of action (and any relevant documentation) has been approved in advance by the Project Co and the Funders' Technical Adviser.

57.7B Where any Sub-Contractor or person is appointed by the Contractor to replace any Key Subcontractor or member of the Design Team the Contractor shall procure the provision of a collateral warranty in the Agreed Form by the person appointed by the Contractor as a replacement for any of the Design Team or any

of the Key Sub-Contractors in the case of the works packages set out in limbs (a), (h) and (i) of the definition of Key Sub-Contractor and in relevant form set out in Schedule Part 9 (*Collateral Agreements with the Board, Project Co and the Security Trustee (Contractor / Key Subcontractors)*) (in each case with such amendments as approved by the Project Co such approval not to be unreasonably withheld) to each of the Board, the Project Co and the Security Trustee for the Funders from any Sub-Contractor or person engaged by the Contractor to replace any Key Sub-Contractor in the case of the works packages set out in limbs (b), (c), (d), (e), (f), (l), (j), (k) and (m) of the definition of Key Sub-Contractor, and shall deliver such warranty or warranties to Project Co upon execution of the relevant Sub-Contracts or appointments.

The Contractor shall procure that any replacement for any Key Sub-Contractor or any replacement for any member of the Design Team shall enter into a contract upon the same or substantially similar terms as the person so replaced.

57.8 The Contractor :

57.8.1 shall ensure that each contract with any Key Sub-Contractor or any of the Design Team (or any contract or appointment with any replacement Key Subcontractor or any member of the Design Team) includes provisions permitting assignation of the benefit of such Sub-Contracts or appointments by the Contractor. The Contracts with the Design Team and the the Key Sub-Contractors in the case of the works packages set out in limbs (a), (h) and (i) of the definition of Key Sub-Contractor shall require the provision of collateral warranties in the Agreed Form in favour of each of the Board, Project Co and the Security Trustee for the Funders. The Contracts with the Key Sub-Contractor in the case of the works packages set out in limbs (b), (c), (d), (e), (f), (l), (j), (k) and (m) of the definition of Key Sub-Contractor shall require the provision of collateral warranties substantially in the relevant form set out in Schedule Part 34 (*FORM OF PERFORMANCE BOND*)(with amendments as shall be approved by the Project Co such approval not to be unreasonably withheld) in favour of each of the Board, Project Co and the Security Trustee for the Funders;

57.8.2 shall at the date of this Agreement procure the provision of and deliver to the Project Co collateral warranties in the Agreed Form to each of the Board, the Project Co and the Security Trustee duly executed by the parties thereto other than (as relevant) the Board or the Security Trustee or the Project Co where the Board or the Security Trustee or the Project Co is a signatory from all Key Sub-Contractors for the works packages set out in limbs (a), (h) and (i) of the definition of "Key Sub-Contractor" and the Design Team and shall, for the works packages set out in limbs (b), (c), (d), (e), (f), (l), (j), (k) and (m) of the definition of "Key Sub-Contractor", within twenty (20) Business Days after the appointment of the relevant Key Subcontractor and in any event not later than the Completion Date procure, and deliver to the Project Co collateral warranties substantially in the form set out in Section 3, Section 6 and Section 7 of Schedule Part 9 (*Collateral Agreements*) in favour of the Board, the Project Co and the Security Trustee duly executed by the parties thereto other than (as relevant) by the Board or the Security Trustee or the Project Co where the Board or the Security Trustee or the Project Co is a signatory, and shall in the case of the work package set out in limb (g) of the definition of "Key Sub-Contractor" procure a product warranty consistent with Good Industry Practice in favour of the Board, and the Project Co and the Security Trustee or as approved by the relevant beneficiary of the

product warranty acting reasonably naming the relevant beneficiary as the beneficiary of the product warranty. If the Contractor fails to deliver any collateral warranty from a Key Sub-Contractor or from the Design Team in accordance with this Agreement, the Project Co shall be entitled to withhold a sum of £10,000 from any payment otherwise due to the Contractor under this Agreement in respect of each collateral warranty which has not been so delivered until the collateral warranty is delivered to the Project Co;

57.8.3 simultaneously or as soon as practicable with the delivery of a collateral warranty to the Project Co in accordance with Clauses 57.7B or 57.8.2, deliver to the Project Co a certified copy of the Key Sub-Contract or the Design Team Appointment excluding the Key Sub-Contract price to which the collateral warranty relates, failing which the Project Co may withhold a sum of £10,000 from any payment otherwise due to the Contractor under this Agreement in respect of each Key Sub-Contract or Design Team Appointment which has not been so delivered until the Key Sub-Contract or Design Team Appointment is delivered to the Project Co;

Removal of Sub-Contractors

57.9 The Project Co may, acting reasonably, after due warning in writing, require the Contractor to remove from the Site or Sites any Sub-Contractor or individual who misconducts itself or is negligent or incompetent in the performance of its duties or fails to conform with any particular provisions with regard to health and safety as may be set out in this Agreement and any such Sub-Contractor or individual shall not be employed again in relation to the Project without the permission of the Project Co.

58. OWNERSHIP INFORMATION AND CHANGES IN CONTROL

58.1 [Not Used]

58.2 [Not Used]

58.3 [Not Used]

58.4 [Not Used]

58.5 [Not Used]

58.6 From the date of this Agreement, no Change in Control in any or all of the shares in the Contractor which has a Material Adverse Effect shall be permitted without the prior written approval of the Project Co and the Funders until the Certificate of Making Good Defects has been issued.

59. MITIGATION

Each of the Contractor and the Project Co shall at all times take all reasonable steps to minimise and mitigate any loss for which the relevant party is entitled to bring a claim against the other party pursuant to this Agreement.

60. DATA PROTECTION

Data Protection

60.1 For the purpose of the following Clauses, the term "personal data" shall have the meaning given to it in the Data Protection Act 1998.

60.2 The Contractor undertakes to the Project Co that it shall comply with the obligations of a "data controller" under the provisions of the Seventh Data Protection Principle as set out in Schedule 1 of the Data Protection Act 1998. In addition, the Contractor:

60.2.1 warrants that it has, or will have at all material times, (and it shall use best endeavours to procure that all Sub-Contractors (and their agents and sub contractors of any tier have or will have at all material times) the appropriate technical and organisational measures in place against unauthorised or unlawful processing of personal data and against accidental loss or destruction of, or damage to, personal data held or processed by it and that it has taken, or will take at all material times, all reasonable steps to ensure the reliability of any of its staff which will have access to personal data processed as part of the Construction Operations;

60.2.2 undertakes that it will act only on the instructions of the Project Co in relation to the processing of any personal data made available by or on behalf of the Project Co as part of the Construction Operations;

60.2.3 undertakes that it will only obtain, hold, process, use, store and disclose personal data as is necessary to perform its obligations under this Agreement and (without prejudice to Clause 5.2 (General standards)) that such data will be held, processed, used, stored and disclosed only in accordance with the Data Protection Act 1998 and any other applicable Law; and

60.2.4 undertakes to allow each of the Project Co and the Board access to any relevant premises on reasonable notice to inspect its procedures described at Clause 60.2.1 above.

61. CONFIDENTIALITY

61.1 [Not Used]

61.2 The parties:

61.2.1 agree that the provisions of this Agreement, and each Ancillary Document shall, subject to Clause 61.2.2 below, not be treated as Confidential Information and may be disclosed without restriction.

61.2.2 agree that Clause 61.2.1 above shall not apply to provisions of this Agreement, or an Ancillary Document designated as Commercially Sensitive Information and listed in Schedule Part 26 (*Commercially Sensitive Information*) to this Agreement which shall, subject to Clause 61.3 be kept confidential for the periods specified in that Schedule Part 26 (*Commercially Sensitive Information*).

61.2.3 shall keep confidential all Confidential Information received by one party from the other party relating to this Agreement and Ancillary Documents or the Project and shall use all reasonable endeavours to prevent their employees and agents from making any disclosure to any person of any such Confidential Information.

Permitted Disclosure

61.3 Clauses 61.2.2 and 61.2.3 shall not apply to:

61.3.1 any disclosure of information that is reasonably required by any person engaged in the performance of their obligations under this Agreement for the performance of those obligations;

61.3.2 any matter which a party can demonstrate is already or becomes generally available and in the public domain otherwise than as a result of a breach of this Clause;

61.3.3 any disclosure to enable a determination to be made under Schedule Part 20 (*Dispute Resolution Procedure*) or in connection with a dispute between the Project Co and any of its subcontractors or the Board;

61.3.4 any disclosure which is required pursuant to any Law or Parliamentary obligation placed upon the party making the disclosure or the rules of any stock exchange or governmental or regulatory authority having the force of law or, if not having the force of law, compliance with which is in accordance with the general practice of persons subject to the stock exchange or governmental or regulatory authority concerned;

61.3.5 any disclosure of information which is already lawfully in the possession of the receiving party, prior to its disclosure by the disclosing party;

61.3.6 any provision of information to the parties' own professional advisers or insurance advisers or to the Senior Funders or the Senior Funders' professional advisers or insurance advisers or, where it is proposed that a person should or may provide funds (whether directly or indirectly and whether by loan, equity participation or otherwise) to the Project Co or Hold Co to enable it to carry out its obligations under this Agreement, or may wish to acquire shares in the Project Co, Hold Co and/or Mac Co in accordance with the provisions of the Project Agreement to that person or their respective professional advisers but only to the extent reasonably necessary to enable a decision to be taken on the proposal;

61.3.7 any disclosure by the Board of information relating to the design, construction, operation and maintenance of the Project and such other information as may be reasonably required for the purpose of conducting a due diligence exercise, to: (i) any proposed new contractor, its advisers and lenders, should the Board decide to retender this Agreement; or (ii) any person in connection with market testing of the Project Agreement; or

61.3.8 any registration or recording of the Consents and property registration required;

61.3.9 any disclosure of information by the Board to any other department, office or agency of the Government or their respective advisers or to the Scottish Futures Trust or to any person engaged in providing services to the Board for any purpose related to or ancillary to this Agreement;

61.3.10 any disclosure for the purpose of:

(a) the examination and certification of the Board's or the Project Co's accounts;

(b) any examination pursuant to section 6(1) of the National Audit Act 1983 of the economy, efficiency and effectiveness with which the Board has used its resources;

(c) complying with a proper request from either party's insurance adviser, or insurer on placing or renewing any insurance policies; or

(d) (without prejudice to the generality of Clause 61.3.4) compliance with the FOI(S)A and/or the Environmental Information (Scotland) Regulations;

61.3.11 [Not Used]; or

61.3.12 disclosure to the extent required pursuant to Clause 63.2;

provided that, to avoid doubt, neither Clause 61.3.10(d) nor Clause 61.3.4 above shall permit disclosure of Confidential Information otherwise prohibited by Clause 61.2.3 where that information is exempt from disclosure under section 36 of the FOI(S)A.

61.4 Where disclosure is permitted under Clause 61.3, other than under Clauses 61.3.2, 61.3.4, 61.3.5, 61.3.8 and 61.3.10, the party providing the information shall procure that the recipient of the information shall be subject to the same obligation of confidentiality as that contained in this Agreement.

61.5 The Contractor shall not make use of this Agreement or any information issued or provided by or on behalf of the Project Co in connection with this Agreement otherwise than for the purpose of this Agreement, except with the written consent of the Project Co.

61.6 Where the Contractor, in carrying out its obligations under this Agreement, is provided with information relating to any Board Party, the Contractor shall not disclose or make use of any such information otherwise than for the purpose for which it was provided, unless the Contractor has obtained the prior written consent of that person and has obtained the prior written consent of the Board.

61.7 On or before the Termination Date or the expiry of the Contractor's Liability Period (as the case may be), the Contractor shall ensure that all documents or computer records in its possession, custody or control, which contain information relating to any patient or Board Party including any documents in the possession, custody or control of a Sub-Contractor, are delivered up to the Project Co.

61.8 The parties acknowledge that Audit Scotland has the right to publish details of this Agreement (including Commercially Sensitive Information) in its relevant reports to Parliament.

61.9 The provisions of this Clause 61 *(Confidentiality)* are without prejudice to the application of the Official Secrets Acts 1911 to 1989.

Announcements

61.10 Unless otherwise required by any Law or any regulatory or governmental authority (but only to that extent), neither party shall make or permit or procure to be made any public announcement or disclosure (whether for publication in the press, the radio, television screen or any other medium) of any Confidential Information.

62. FREEDOM OF INFORMATION

62.1 The Contractor acknowledges that the Board is subject to the requirements of the FOI(S)A and the Environmental Information (Scotland) Regulations and shall assist and cooperate with the Board to facilitate the Board's compliance with its Information disclosure requirements pursuant to the same in the manner provided for in Clauses 62.2 to 62.8.

62.2 Where the Board receives a Request for Information in relation to Information that the Contractor via the Project Co is holding on its behalf and which the Board does not hold itself the Board or the Project Co may refer to the Contractor such Request for Information and the Contractor shall:

62.2.1 provide the Board and the Project Co with a copy of all such Information in the form that the Board or the Project Co requires as soon as practicable and in any event within five (5) Business Days (or such other period as the Board acting reasonably may specify) of the Board's request; and

62.2.2 provide all necessary assistance as reasonably requested by the Board or the Project Co in connection with any such Information, to enable the Board to respond to the Request for Information within the time for compliance set out in section 10 of the FOI(S)A or Regulation 5 of the Environmental Information (Scotland) Regulations.

62.3 Following notification under Clause 62.2, and up until such time as the Contractor has provided the Board and the Project Co with all the Information specified in Clause 62.2.1, the Contractor may make representations to the Board as to whether or not or on what basis Information requested should be disclosed, and whether further information should reasonably be provided in order to identify and locate the information requested, provided always that the Board shall be responsible for determining at its absolute discretion:

62.3.1 whether Information is exempt from disclosure under the FOI(S)A and the Environmental Information (Scotland) Regulations;

62.3.2 whether Information is to be disclosed in response to a Request for Information, and

in no event shall the Contractor respond directly, or allow any Sub-Contractor to respond directly, to a Request for Information unless expressly authorised to do so by the Board.

62.4 The Contractor shall ensure that all Information held on behalf of the Board is retained for disclosure for at least seven (7) years (from the date it is acquired), and shall permit the Board and the Project Co to inspect such Information as requested from time to time.

62.5 The Contractor shall transfer to the Project Co any Request for Information received by the Contractor as soon as practicable and in any event within one (1) Business Days of receiving it.

62.6 The Contractor acknowledges that any lists provided by it listing or outlining Confidential Information are of indicative value only and that the Board may nevertheless be obliged to disclose Confidential Information in accordance with the requirements of FOI(S)A and the Environmental (Scotland) Regulations.

62.7 In the event of a request from the Board pursuant to Clause 62.2 the Contractor shall as soon as practicable, and in any event within three (3) Business Days of

receipt of such request, inform the Board and the Project Co of the Contractor's estimated costs of complying with the request to the extent these would be recoverable, if incurred by the Board, under section 13(1) of the FOI(S)A and the Fees Regulations. Where the Board informs the Project Co in writing that it does require the Project Co to comply with the request the Project Co shall so inform the Contractor and the three (3) Business Days period for compliance shall be extended by such number of additional days for compliance as the Board is entitled to under section 10 of the FOI(S)A. In such case, the Project Co shall notify the Contractor of such additional days as soon as practicable after becoming aware of them and shall reimburse the Contractor for such costs as the Contractor incurs in complying with the request to the extent it is itself entitled to reimbursement of such costs from the Board.

62.8 The Contractor acknowledges that (notwithstanding the provisions of Clause 61 (*Confidentiality*)) the Board may, acting in accordance with the Scottish Ministers Code of Practice on the Discharge of Functions of Public Authorities under Part 6 of the Freedom of Information (Scotland) Act 2002 (the "**Code**"), and/or having full regard to any guidance or briefings issued by the Scottish Information Commissioner or the Scottish Ministers, be obliged under the FOI(S)A, or the Environmental Information (Scotland) Regulations to disclose Information concerning Project Co or the Project:

62.8.1 in certain circumstances without consulting with the Project Co or the Contractor; or

62.8.2 following consultation with the Project Co and having taken their views into account,

provided always that where Clause 62.8.1 above applies the Project Co shall where notified by the Board, in accordance with the recommendations of the Code, draw this to the attention of the Contractor prior to any disclosure.

62.9 [Not Used]

63. INFORMATION AND AUDIT ACCESS

63.1 The Contractor shall provide to the Project Co's Representative all information, documents, records and the like in the possession of, or available to, the Contractor (and to this end the Contractor shall use all reasonable endeavours to procure that all such items in the possession of any Contractor Party shall be available to it and Contractor has included, or shall include, relevant terms in all contracts with the Contractor Parties to this effect) as may be reasonably requested by the Project Co's Representative for any purpose in connection with this Agreement.

63.2 For the purpose of:

63.2.1 the examination and certification of the Board's accounts; or

63.2.2 any examination pursuant to section 23 of the Public Finance and Accountability (Scotland) Act 2000 of the economy, efficiency and effectiveness with which the Board has used its resources,

the Auditor General for Scotland may examine such documents as he may reasonably require which are owned, held or otherwise within the control of the Contractor (and the Contractor shall procure that any person acting on its behalf who has such documents and/or other information shall also provide access) and may require the Contractor to produce such oral or written explanations as he considers necessary.

63.3 The Contractor shall provide and shall procure that its Sub-Contractors shall provide such information as the Project Co and the Board may reasonably require from time to time to enable them to meet their obligations to provide reports and returns pursuant to regulations, directions or guidance applicable to the Board including, without limitation, reports and returns regarding the physical condition of buildings occupied by the Board, health and safety, under the firecode, relating to environmental health and to comply with requirements for the provision of information relating to achievement of customer service targets.

64. NOTICES

64.1 All notices under this Agreement shall be in writing and all certificates, notices or written instructions to be given under the terms of this Agreement shall be served by sending the same by first class post, or by hand, leaving the same at:

If to the Project Co	Address:	Chris MacKay Burness Paull LLP 50 Lothian Road Edinburgh EN3 9WJ
If to the Contractor	Address:	Ben Keenan BMCE Ltd 99 Bishopsgate Second Floor London EC2M 3XD
If to the Board	Address:	The Chief Executive Lothian Health Board Waverley Gate 2-4 Waterloo Place Edinburgh EH1 3EG

64.2 Where any information or documentation is to be provided or submitted to the Contractor's Representative or the Project Co Representative it shall be provided or submitted by sending the same by first class post, or by hand, leaving the same at:

If to the Project Co's Representative	Address:	Wallace Weir c/o Chris MacKay Burness Paull LLP 50 Lothian Road Edinburgh EN3 9WJ
If to the Contractor's Representative	Address:	Alasdair Fernie c/o Ben Keenan BMCE Ltd 99 Bishopsgate Second Floor London EC2M 3XD

(copied in each case to the Project Co)

64.3 Either party to this Agreement (and either Representative or the Board) may change its nominated address by prior notice to the other parties.

64.4 Notices given by post shall be effective upon the earlier of (i) actual receipt, and (ii) five (5) Business Days after mailing. Notices delivered by hand shall be effective upon delivery.

65. NO WAIVER

65.1 Any relaxation, forbearance, indulgence or delay (together "**indulgence**") of any party in exercising any right shall not be construed as a waiver of the right and shall not affect the ability of that party subsequently to exercise that right or to pursue any remedy, nor shall any indulgence constitute a waiver of any other right (whether against that party or any other person).

Continued effect – no waiver

65.2 Notwithstanding any breach of this Agreement by either party, and without prejudice to any other rights which the other party may have in relation to it, the other party may elect to continue to treat this Agreement as being in full force and effect and to enforce its rights under this Agreement. The failure of either party to exercise any right under this Agreement, including any right to terminate this Agreement and any right to claim damages, shall not be deemed a waiver of such right for any continuing or subsequent breach.

66. NO AGENCY

66.1 Nothing in this Agreement shall be construed as creating a partnership or as a contract of employment between the Contractor and the Project Co.

66.2 Save as expressly provided otherwise in this Agreement, the Contractor shall not be, or be deemed to be, an agent of the Project Co and the Contractor shall not hold itself out as having authority or power to bind the Project Co in any way.

66.3 Without limitation to its actual knowledge, the Contractor shall for all purposes of this Agreement, be deemed to have such knowledge in respect of the Project as is held (or ought reasonably to be held) by any Contractor Party.

67. ENTIRE AGREEMENT

67.1 Except where expressly provided otherwise in this Agreement, this Agreement constitutes the entire agreement between the parties in connection with its subject matter and supersedes all prior representations, communications, negotiations and understandings concerning the subject matter of this Agreement.

67.2 Each of the parties acknowledges that:

67.2.1 it does not enter into this Agreement on the basis of and does not rely, and has not relied, upon any statement or representation (whether negligent or innocent) or warranty or other provision (in any case whether oral, written, express or implied) made or agreed to by any person (whether a party to this Agreement or not) except those expressly repeated or referred to in this Agreement and the only remedy or remedies available in respect of any misrepresentation or untrue statement made to it shall be any remedy available under this Agreement; and

67.2.2 this Clause shall not apply to any statement, representation or warranty made fraudulently, or to any provision of this Agreement which was induced by fraud, for which the remedies available shall be all those available under the law governing this Agreement.

68. THIRD PARTY RIGHTS

Save to the extent expressly provided in this Agreement and, to avoid doubt, without prejudice to the terms of the Funders' Direct Agreement or the rights of any permitted successor to the rights of the Project Co or of any permitted assignee, it is expressly declared that no rights shall be conferred under and arising out of this Agreement upon any person other than the Contractor and the Project Co and without prejudice to the generality of the foregoing, there shall not be created by this Agreement a *jus quaesitum tertio* in favour of any person whatsoever.

69. SEVERABILITY

If any provision of this Agreement shall be declared invalid, unenforceable or illegal by the courts of any jurisdiction to which it is subject, such provision may be severed and such invalidity, unenforceability or illegality shall not prejudice or affect the validity, enforceability and legality of the remaining provisions of this Agreement.

70. CONFLICTS OF AGREEMENTS

In the event of any conflict between this Agreement and the Project Documents, the provisions of this Agreement shall prevail.

71. COSTS AND EXPENSES

Each party shall be responsible for paying its own costs and expenses incurred in connection with the negotiation, preparation and execution of this Agreement.

72. FURTHER ASSURANCE

Each party shall do all things and execute all further documents necessary to give full effect to this Agreement.

73. COMMUNITY BENEFITS

73.1 The Contractor shall comply with the Board's Community Benefits Requirements in accordance with Project Co's Community Benefits Method Statements.

73.2 If, in relation to the Works, the Contractor does not:

73.2.1 in respect of educational support, provide twenty five (25) work placements for 16 to 19 year olds and nine (9) work placements for 14 to 16 year olds and undertake twenty (20) curriculum support activities in accordance with the Project Co's Community Benefits Method Statement then for each work placement and/or curriculum support activity not provided the Contractor shall pay to the Project Co the relevant amount, as detailed in rows 1 to 3 of the table set out in Section 3of Schedule Part 32 (*Community Benefits*), under declaration that the total amount payable pursuant to this Clause 73.2.1shall not exceed the sum of twenty five thousand pounds (£25,000) in the aggregate over the whole of the Construction Phase;

73.2.2 in respect of jobs, provide a total of seventy three (73) new jobs comprising of fifty three (53) new entrant jobs, three (3) graduate jobs and seventeen (17) new apprenticeships jobs from a range of disciplines including electrical, plumbing, joinery, construction trades, administration and welfare operatives, then for each new entrants job, new graduate job and/or new apprenticeship job not provided the Contractor shall pay to the Project Co the relevant amount, as detailed in rows 4 to 6 of the table set out in Section 3

of Schedule Part 32 (*Community Benefits*), under declaration that the total amount payable pursuant to Clause 73.2.2 shall not exceed the sum of twenty five thousand pounds (£25,000), in the aggregate over the whole of the Construction Phase;

73.2.3 in respect of training, provide thirty four (34) NVQ starts, thirty six (36) NVQ completions from a range of disciplines including electrical, plumbing, joinery, construction trades, administration and welfare operatives and provide fourteen (14) training plans, twenty five (25) supervisor training sessions, twenty one (21) leadership training sessions and twenty four (24) advanced health and safety sessions, then for each NVQ start, NVQ completion, training plan, supervisor training session, leadership training session and advanced health and safety session not provided the Contractor shall pay to the Project Co the relevant amount, as detailed in rows 7 to 12 of the table set out in Section 3 of Schedule Part 32 (*Community Benefits*), under declaration that the total amount payable pursuant to this Clause 73.2.3 shall not exceed the sum of twenty five thousand pounds (£25,000), in the aggregate over the whole of the Construction Phase;

73.2.4 in respect of local supply chain opportunities for SMEs and Social Enterprises advertise fifty per cent (50%) of available work packages required via the Capital City Partnership and project portal or any other similar media, and host two (2) 'meet the buyer' events and four (4) 'capacity building workshops' then for each work package not advertised and each meet the buyer event and "capacity building workshop" not provided the Contractor shall pay to the Project Co the relevant amount, as detailed in rows 13 to 15 of the table set out in Section 3 of Schedule Part 32 (*Community Benefits*), under declaration that the total amount payable pursuant to this Clause 73.2.4 shall not exceed the sum of twenty five thousand pounds (£25,000), in the aggregate over the whole of the Construction Phase;

73.2.5 provide the quarterly information in accordance with the Project Co's Community Benefits Method Statement then on the occurrence of each such failure the Contractor shall pay to the Project Co the amount, as detailed in row 16 of the table set out in Section 3 of Schedule Part 32 (*Community Benefits*), under declaration that the total amount payable pursuant to this Clause 73.2.5 shall not exceed the sum of five thousand pounds (£5,000) in the aggregate over the whole of the Construction Phase,

provided that in each case the Project Co has first served notice on the Contractor notifying it of its non-compliance and the Contractor has failed to rectify such non-compliance within fifteen (15) Business Days of such notice.

73.3 The Project Co's sole and exclusive remedy in respect of a breach of Clause 73.2 above shall be the payments provided for in Clause 73.2 and the Contractor's maximum liability in this respect shall be fifty thousand pounds (£50,000) in the aggregate up to the Termination Date or expiry of the Defects Liability Period.

73.4 [Not Used]

74. GOVERNING LAW AND JURISDICTION

74.1 This Agreement shall be considered as a contract made in Scotland and shall be subject to the laws of Scotland.

74.2 Subject to the provisions of the Dispute Resolution Procedure, both parties agree that the courts of Scotland shall have exclusive jurisdiction to hear and settle any action, suit, proceeding or dispute in connection with this Agreement and irrevocably submit to the jurisdiction of those courts.

75. OVERRIDING ENTITLEMENTS

75.1 Notwithstanding any provision of this Agreement save for this Clause 75 and Clause 76 (*Project Co Breach and Non PA Entitlement Obligations*), and subject to the Project Co's rights of set-off or deduction, the Contractor's entitlement to any amount of money or recovery by any means (including by means of set-off, abatement or counterclaim) of any other benefit, right, sum or adjustment or addition to the Initial Contract Sum (including compensation by way of indemnity) (each being a "**Price Adjustment**"), where there is an equivalent benefit, relief or right under the Project Agreement (including any provision of the Project Agreement which is expressly acknowledged under this Agreement) in respect of the same (or substantially the same) circumstance ("**PA Entitlement**") shall be subject to this Clause 75. This Clause 75 shall not apply to any entitlement of the Contractor for Project Co Breach or in respect of a Change initiated by the Project Co unless the Change initiated by the Project Co has been issued because the Board has issued a Board Change (to which the provisions of Clause 76 shall apply) or to any entitlement of the Contractor pursuant to Clause 53 (*Insurance*).

For the avoidance of doubt neither this Clause 75.1, nor any other provision, shall restrict the Contractor's right to refer a dispute concerning the extent of its rights to Contract Relief and Price Adjustment to Adjudication at any time nor, save in the case of Board insolvency as referred to in Clause 75.5, shall this provision or any other provision require that the Contractor's rights are conditional on the Project Co receiving payment from the Board or any other third party.

75.2 The Contractor's entitlement to any extension of time for performance of its obligations under this Agreement, or to seek relief from any other consequence of delayed or non performance (a "**Contract Relief**") shall be no greater than the entitlement of the Project Co under the Project Agreement. This Clause 75.2 shall not apply to any entitlement to Contract Relief caused by a Project Co Breach or by a Change initiated by the Project Co (to which the provisions of Clause 76 shall apply) save where the Change initiated by the Project Co has been issued because of a Board Change. Where the Change initiated by the Project Co has been issued because of a Board Change the Contractor's entitlement to Contract Relief shall be no greater than the entitlement of the Project Co under the Project Agreement. The amount and extent of the Contract Relief to which the Contractor is allowed, shall be:

75.2.1 as identified in any agreement or determination under the Project Agreement; or

75.2.2 where not identified as referred to at paragraph 75.2.1 above then such proportion of the benefit of the Project Co under the Project Agreement as is fairly and reasonably referable to the Works having regard to all relevant factors, including

(a) whether and to what extent the relevant Contract Relief claimed by the Contractor formed part of the basis of the Project Co's submissions to the Board or the relevant tribunal under the Project Agreement dispute resolution procedure and whether, in any event, the Board or such tribunal recognised that the extension of time or relief from any other consequence of delayed or non-performance awarded under the Project Agreement

included a period of time or relief attributable to such Contract Relief;

(b) whether submissions differing in form from those referred to in (a), but having the same effect, were made by the Project Co and or recognised by the Board or relevant tribunal as referred to in (a);

(c) the parties agreement that a fair and reasonable proportion may be none if the relevant entitlement as against the Board is not attributable to the Contract Relief claimed by the Contractor.

75.3 Where there is a PA Entitlement in relation to Price Adjustment, the amount and extent of the PA Entitlement to which the Contractor is allowed shall be the fair and reasonable proportion of the PA Entitlement which the Contractor would recover under the Project Agreement on the following assumptions that:

75.3.1 the Board has performed all its obligations including all payment obligations under the Project Agreement;

75.3.2 the Project Co has claimed and recovered all amounts which it is entitled to recover under the Project Agreement;

75.3.3 the Board has performed or procured the performance of all administrative or other actions which are a condition of payment under the Project Agreement and has satisfied all valid and proper claims for payment.

75.4 The fair and reasonable proportion referred to in Clause 75.2.2 or Clause 75.3 shall be assessed by the Project Co Representative and notified by him to the Contractor. In the event of failure to reach agreement between the Project Co and the Contractor, on any matter referred to in Clause 75.2 or Clause 75.3, including what is a fair and reasonable proportion of the Contractor's benefit, within ten (10) days of notification of the decision of the Project Co Representative (or such later date as the Contractor and the Project Co may agree), such matter may be referred at any time to be determined by the Dispute Resolution Procedure.

75.5 In the event that the Contractor claims a Price Adjustment before the Project Co has for any reason, other than a failure by the Project Co to comply with the provisions of Clause 77 (*Enforcement of Parallel Issues*), received the payment pursuant to the PA Entitlement under the Project Agreement, the final date for payment of the Price Adjustment claimed by the Contractor shall be deemed to be the date occurring 6 months after the assessment by the Project Co Representative, except in the case of Board insolvency where payment will follow payment by the Board. The Contractor shall not be entitled to claim payment or recovery by any other means (including set-off, abatement or counterclaim) before the payment falls due from the Project Co. In no circumstances, other than Board insolvency, shall the Project Co seek or be entitled to delay payment under this provision on the basis that any payment has not been received from the Board.

75.6 Where and to the extent that the Contractor has recovered any amounts in respect of a Price Adjustment and/or a Contract Relief and it is subsequently determined under the Project Agreement that the Project Co did not have an entitlement under the Project Agreement equivalent to that upon which the Contractor's recovery was founded the Project Co shall be entitled to reopen the agreement or determination made pursuant to Clause 75.3 on the grounds that any matters arising from the determination under the Project Agreement, provided that the assessment of the Contractor's entitlement to Price Adjustment and/or a Contract Relief shall be made in accordance with Clauses 75.3 and 75.4.

75.7 Not Used

75.8 Not Used

76. PROJECT CO BREACH AND NON PA ENTITLEMENT OBLIGATIONS

76.1 The Contractor shall be allowed Contract Relief and/or Price Adjustments:

76.1.1 subject to, and in accordance with, Part 1 (except where paragraph 1.3 applies) and Part 5, Schedule Part 17 (*Compensation on Termination*) (a "**Non PA Entitlement Obligation**");

76.1.2 subject to Clause 79 (*Interface*), on the occurrence of a breach by the Project Co of its express obligations under this Agreement, unrelated to a breach by the Board under the Project Agreement and to the extent not caused or contributed to by the Contractor, having an adverse impact on the Contractor (a "**Project Co Breach**") calculated in accordance with the provisions of this Agreement applicable to Delay and Compensation Events;

76.1.3 pursuant to Clause 49.2.5 (*Project Co indemnities to the Contractor*); and

76.1.4 pursuant to Clause 29.3.15,

and any Price Adjustments so due shall be paid on the date provided for in the relevant provision of this Agreement and where no date is so provided, within ten (10) Business Days of the amount being agreed or determined under this Agreement and the Maximum Payment Schedule and Progress Milestone Schedule shall be adjusted accordingly.

77. ENFORCEMENT OF PARALLEL ISSUES

77.1 The Project Co agrees to use endeavours to pursue under the Project Agreement such rights and remedies as may relate to the Works or the Contractor's other risks and obligations hereunder in order to secure a favourable resolution, provided always that:

77.1.1 the Contractor has given prior written notice specifying the particular issue to be pursued and details thereof;

77.1.2 the Contractor shall be obliged to provide reasonable information, advice and assistance to the Project Co to enable it to pursue such rights and remedies and shall comply with paragraphs 9.1 and 9.2 of Part B of Schedule Part 20 (*Dispute Resolution Procedure*);

77.1.3 the Contractor shall bear the costs of the Project Co pursuing such rights and remedies on its behalf; and

77.1.4 the Contractor shall not be entitled to recover from the Project Co and shall reimburse the Project Co in respect of all and any losses, damages, costs or expenses (including costs for which the Project Co may be held liable to the Board or claim, demand, proceeding or liability which might arise out of or in connection with the Project Co pursuing such rights or remedies on the Contractor's behalf.

77.2 The Project Co shall not make any compromise of the rights and remedies referred to in Clause 77.1 without first obtaining the consent of the Contractor (such consent not to be unreasonably withheld or delayed).

77.3 Where the Contractor refuses to grant consent as envisaged in Clause 77.2 (whether reasonably or not) the Contractor shall indemnify the Project Co against all losses, damages, costs or expenses (including any liabilities to the Board or third parties) arising out of the failure to grant consent or any related or consequential dispute resolution procedure, or the decision thereof.

77.4 The Project Co shall be deemed to have discharged its obligation pursuant to Clause 76.1 where the Contractor is granted the right to Name Borrow or make Submissions pursuant to Part B of Schedule Part 20 or where paragraph 5.4 of Part B of Schedule Part 20 applies.

77.5 The Project Co will not be obliged to pursue such rights and remedies on behalf of the Contractor where there is no reasonable prospect of success or the claim would be vexatious.

77.6 This Clause 77 (*Enforcement of Parallel Issues*) shall survive termination (for any reason) of the Contractor's employment under this Agreement.

78. CONSULTATION

78.1 In relation to:

78.1.1 any provision in the Project Agreement concerning consultation or liaison or agreement with, or the consent or permission of the Board or any third party, (including any matters subject to the Dispute Resolution Procedure); or

78.1.2 any proposal to amend the Project Agreement;

which has or may have an adverse monetary effect or other material effect on the carrying out of the Works or the obligations or liabilities of the Contractor, the Project Co shall consult with the Contractor as to such matter and allow the Contractor to make representation to the Project Co and the Project Co shall use reasonable endeavours to consider and if appropriate relay such representations to the Board or such third party.

79. INTERFACE

79.1 Subject to Clause 79.2A and notwithstanding any other provision of this Agreement, the Contractor shall not in any manner whatsoever:

79.1.1 be entitled to any Contract Relief; or

79.1.2 be entitled to any Price Adjustment; or

79.1.3 assert any defence in connection with or otherwise withhold, reduce or avoid any claim made by the Project Co under or pursuant to this Agreement; or

79.1.4 be entitled to any compensation on termination from the Project Co,

in respect of or in connection with any act or omission of the Service Provider (including the provision of Services or any breach of contract or negligence of the Service Provider) or other Project Co Parties (**"Other Subcontractor Acts"**).

79.1A If the Project Co and another Project Co Party or another Service Provider are responsible for the same loss of the Contractor, the Contractor shall release the Project Co from any liability in respect of such loss and, if the Contractor wishes to

claim such loss it shall (and its rights shall be limited to) exercise its rights under Clause 79.2A.

79.2 Without prejudice to Clause 17A (*Defects*) if the Project Co claims any Reduction Amount or other sum or right to deduct from the Contractor under this Agreement the Contractor shall allow such deduction or within five (5) Business Days of receipt of the Project Co's demand, pay to the Project Co the amount claimed free of any deductions, set off or counterclaim. The Contractor may, following payment:

79.2.1 in respect of Other Subcontractor Acts pursue reimbursement under (and its rights shall be limited to) Clause 79.2A.

79.2.2 in respect of any other matter pursue reimbursement of any amount which the Project Co was not properly entitled to claim or deduct in accordance with this Agreement under the Dispute Resolution Procedure PROVIDED ALWAYS (and subject to the Contractor's rights in respect of Project Agreement Parallel Issues under Part B of Schedule Part 20 (*Dispute Resolution Procedure*)) that the Contractor shall not be entitled so to do on the basis that the amount was not properly paid or payable or allowable by way of deduction to the Board under the Project Agreement.

79.2A In respect of Other Subcontractor Acts the Contractor shall pursue any entitlements it wishes to claim under and subject to the Interface Agreement.

79.3 The Contractor agrees to comply with its obligations under the Interface Agreement and to exercise its rights under the Interface Agreement in a manner which is consistent with the proper discharge of its obligations under this Agreement.

79.4 Subject to Clause 79.3, nothing in this Agreement shall prevent the Contractor from exercising its rights under the Interface Agreement.

80. PROJECT CONSENTS

The parties acknowledge that where under this Agreement, any consent, authorisation or approval is required from the Project Co, it shall be legitimate for the Project Co to: (i) take into account any consent, authorisation or approval which the Project Co would in turn be required to obtain under the Project Agreement and/or the Funding Agreements ("**Approval**"); and (ii) to refuse any consent unless and until such Approval is given.

81. PROJECT CO'S COMPLIANCE WITH THE PROJECT AGREEMENT

Where the Contractor provides a notice or information to the Project Co or the Project Co's Representative as envisaged by Clauses 49.3 (*Conduct of claims*), 17 (*Pre-Completion Commissioning and Completion*), 19 (*Fossils and Antiquities*), 32 (*Changes in Law*), 29 (*Delay Events*), 30 (*Relief Events*), 31 (*Force Majeure*), 40 (*Contractor Event of Default*) or 42 (*Voluntary Termination of the Project Agreement*) or Schedule Part 8 (*Review Procedure*), 13 (*Changes*) or 20 (*Dispute Resolution Procedure*) of this Agreement in accordance with and within the time periods stipulated within the relevant Clause or Schedule, the Project Co shall provide an equivalent notice or information to the Board in accordance with and within the time periods stipulated within the equivalent Clause or Schedule of the Project Agreement.

82. CONSENTS AND APPROVALS

No consent, approval, review, inspection, comment, (or failure to review, inspect and/or comment) in respect of any matter by or on behalf of by the Project Co, Project Co's Representative, the Board or any other person shall relieve the Contractor of any obligation or

liability under or pursuant to this Agreement (or exclude or limit the Project Co's rights under this Agreement or the Project Agreement or the Board's rights under the Project Agreement).

IN WITNESS WHEREOF these presents typewritten on this and the preceding 117 pages together with the Schedule in 37 Parts are executed by the parties hereto as follows:

SIGNED for and on behalf of the
said IHS LOTHIAN LIMITED acting
under a power of attorney

at LONDON

on 13TH FEBRUARY 2015

by

MARK DENNIS BRADSHAW ..... [redacted] .....

Print Full Name Attorney

and

JOHN MICHAEL COSGROVE ..... [redacted] .....

Print Full Name Attorney

SIGNED for and on behalf of [redacted]
BROOKFIELD MULTIPLEX CONSTRUCTION
EUROPE LIMITED

[redacted]

at London

on 13th February 2015

by [redacted]

..... Director

BENJAMIN KEENAN ..... Full Name

by [redacted]

..... Witness

[redacted] Full Name

99 Bishopsgate, London EC2M 3XD Address

This is the Schedule in 37 parts referred to in the foregoing contract between IHS Lothian Limited (Project Co) and Brookfield Multiplex Construction Europe Limited (the Contractor)

SCHEDULE

SCHEDULE PART 1

DEFINITIONS AND INTERPRETATION

SECTION 1

In this Agreement unless the context otherwise requires:

"217 Old Dalkeith Road"	means that area forming 217 Old Dalkeith Road shown outlined in red on Plan 9;
"Access Areas"	means the Orange Area and the Yellow Area;
"Access Roads"	means the access roads and footpaths shown coloured pink and yellow on Plan 8;
"Access Roads (Future)"	means the access roads and footpaths leading from Old Dalkeith Road, Edinburgh as shown shaded yellow, blue and pink/hatched black (for the avoidance of doubt, excluding the section of road shaded pink but unhatched) on Plan 6 or such alternative access roads and footpaths from Old Dalkeith Road, Edinburgh, as approved by the local planning authority and roads authority to be constructed on the Campus Site in substitution for the foregoing access roads and footpaths;
"Access Strategy"	means the agreed Interface Proposal for access to the Access Areas, as set out in Appendix 4 of Schedule Part 31 *(Consort Interface with Campus Site and/or Campus Facilities)* of the Project Agreement and/or any proposal for access to the Access Areas agreed or determined pursuant to paragraph 1 of Section 2 (*Access areas and Amended Supplemental Drainage Proposal*) of Part 3 (*Interface Proposals*) of Schedule Part 31 *(Consort Interface with Campus Site and/or Campus Facilities)* of the Project Agreement;
"Actual Commissioning End Date"	means the date specified in the Commissioning Completion Certificate issued by the Independent Tester pursuant to Clause 18.4;
"Actual Completion Date"	means the later of: (a) the date stated in the Certificate of Practical Completion issued by the Independent Tester pursuant to Clause 17.13; and (b) subject to Clause 14.6, the Completion

Date;

"Actual Liability"	has the meaning given in Clause 46.7.3;
"Additional Oversail Strategy"	has the meaning given in paragraph 1 of Section 1 (*Oversail*) of Part 2 (*Interface Proposals Procedure*) of Schedule Part 31 (*Consort Interface with Campus Site and/or Campus Facilities)* of the Project Agreement;
"Adjudicator"	has the meaning given in paragraph 4.1 of Schedule Part 20 (*Dispute Resolution Procedure*);
"Amended Service Proposal"	has the meaning in paragraph 1.1 of Section 3 (*Amended Service Proposal*) of Part 2 (*Interface Proposals Procedure*) of Schedule Part 31 (*Consort Interface with Campus Site and/or Campus Facilities*) of the Project Agreement;
"Amended Supplemental Drainage Proposal"	has the meaning given in paragraph 2.1 of Section 2 (*Access Areas and Amended Supplemental Drainage Proposal*) of Part 2 (*Interface Proposals Procedure*) of Schedule Part 31 *(Consort Interface with Campus Site and/or Campus Facilities)* of the Project Agreement;
"Ancillary Documents"	has the meaning given in Clause 57.7A;
"Ancillary Rights"	means such rights as set out in Section 3 (*Ancillary Rights*) of Schedule Part 5 (*Land Matters*);
"Approved RDD Item"	means an item of Reviewable Design Data which has been returned or has been deemed to have been returned endorsed either "Level A – no comment" or "Level B – proceed subject to amendment as noted" by the Project Co's Representative pursuant to the provisions of Clause 12 (*The Design Construction and Commissioning Process*) and Schedule Part 8 (*Review Procedure*) (provided that in the case of any item of Reviewable Design Data which has been returned or has been deemed to have been returned endorsed "Level B – proceed subject to amendment as noted" the Contractor has taken account of the Project Co's Representative's comments), as such item of Reviewable Design Data may be varied or amended from time to time in accordance with Schedule Part 16 (*Change Protocol*);
"As Built Energy Model"	means Project Co's Financial Close Energy Model updated to incorporate all as built construction, commissioning and testing information and any Board agreed design amendments, as agreed with the Board prior to the Commissioning End Date;

"As Built Facilities Energy Performance"	means the Energy Performance of the Facilities as determined by the Project Co's As Built Energy Model;
"Associated Companies"	means, in relation to any person: (a) a company which is a Subsidiary, a Holding Company or a company that is a Subsidiary of the ultimate Holding Company of that relevant company, and in the case of the Project Co shall include Hold Co and each of the Shareholders; or (b) any unit trust, limited partnership or fund in which that person or any Holding Company or Subsidiary of that person or any Subsidiary of such Holding Company of that person is a trustee, general partner, principal, manager, co-manager or adviser, save that for the purposes of determining whether one entity is an Associated Company of another any transfer of shares by way of security or to a nominee of the transferor shall be disregarded, and the term "**Associate**" shall be interpreted accordingly;
"Base Date"	has the meaning given in Paragraph 16 of Section 2 (*Interpretation*) of Schedule Part 1 (*Definitions and Interpretation)*;
"Beneficiary"	has the meaning given in Clause 49.3 (*Conduct of claims*);
"Board Asset"	means the Retained Estate, Retained Site and any other assets and equipment or other Property used by, or on behalf of, the Board or any Board Party, other than the Facilities;
"Board Change"	has the meaning given in Schedule Part 16 (*Change Protocol*) of the Project Agreement;
"Board Collateral Warranty"	means the collateral warranty in the form set out in Schedule Part 9 (*Collateral Agreements with the Board, Project Co and the Security Trustee (Contractor / Key Subcontractors)*) from the Contractor in favour of the Board;
"Board Party"	means any: (i) of the Board's agents, contractors (including Consort and/or any Consort Party) and sub-contractors of any tier and its or their directors, officers and employees; and/or

(ii) University Party performing Clinical Services,

each at the Facilities, with the authority of the Board but excluding the Project Co, any Project Co Party, the Contractor, any Contractor Party and statutory undertakers and utilities and "**Board Parties**" shall be construed accordingly;

"Board Policies" means, subject to Clause 27.7, the policies of the Board set out in Schedule Part 28 *(Board Policies)* as amended from time to time;

"Board Services" means:

(a) the Clinical Services;

(b) the Non-Clinical Services;

(c) a catering service comprising a restaurant, grab and go kiosks, vending machines and trolley services,

(d) retail premises for the sale of goods which are ordinarily sold in hospitals;

(e) display of works of art for exhibition and/or sale within the Site;

(f) any Volunteer Services;

(g) the holding of an occasional fete, tombola and raffle for charitable fund raising purposes within the Site;

(h) Teenager Cancer Trust Activities,

and such other services as may be notified to the Project Co by the Board from time to time which are not services to be carried out by the Project Co under the Project Agreement;

"Board Specified Group 1 Equipment" means the Group 1 Equipment to be specified by the Board as listed in Appendix 4 in Schedule Part 11 (*Equipment*);

"Board's Commissioning" means the Board's pre-completion commissioning activities to be carried out by the Board in accordance with Clause 17 (*Pre-Completion Commissioning and Completion*);

"Board's Community Benefits Requirements" means those requirements set out in Section 1 of Schedule Part 32 (Community Benefits);

"Board's Construction Requirements" means the requirements of the Board set out or identified in Section 3 (*Board's Construction Requirements*) of Schedule Part 6 (*Construction Matters*) as amended from time to time in accordance with the terms of the Project

	Agreement;
"Board's Post Completion Commissioning"	means the Board's post-completion commissioning activities to be carried out by the Board in accordance with Clause 18.1 (*Post Completion Commissioning*);
"Board's Representative"	means the person so appointed by the Board pursuant to Clause 8 (*Representatives*);
"Bus Stop Infrastructure"	means the infrastructure resulting from the Bus Stop Works;
"Bus Stop Works"	means the design (including preparation of all Design Data) constructing, testing and commissioning and completion of the bus stop works to be undertaken in accordance with paragraph 4.5.10(e)(i) of the Board's Construction Requirements;
"Business Day"	means a day other than a Saturday, Sunday or a bank holiday in Edinburgh;
"Campus Facilities"	means the Facilities and Retained Estate;
"Campus Parties"	means the Board and/or Board Parties and/or Consort and/or Consort Parties and/or the University and/or the University Parties, and each of their tenants or any party authorised by the same;
"Campus Site"	means the land shown outlined in red on Plan 7 including for the avoidance of doubt the Site and the University Site;
"Capital Expenditure"	means capital expenditure as such term is interpreted in accordance with generally accepted accounting principles in the United Kingdom from time to time;
"Car Park E"	means the area of land the extent of which is shown delineated in a broken red line on Plan 3 and the location of which within the Campus Site is shown on Plan 5;
"CDM Co-ordinator"	means the person named in Clause 12A.1 or such substitute CDM Co-ordinator appointed by the Contractor from time to time and notified to the Project Co in writing to carry out the functions of CDM Co-ordinator under this Agreement in accordance with the CDM Regulations;
"CDM Regulations"	has the meaning given in Section 2 (*Safety during Construction*) of Schedule Part 6 (*Construction Matters*);
"Certificate of Making Good Defects"	means a certificate in the relevant form set out in Schedule Part 22 (*Certificates*) and issued in accordance with Clause 17A (*Defects and*

Remedial Works);

"Certificate of Practical Completion"	means a certificate in the relevant form set out in Schedule Part 22 (*Certificates*);
"Change"	has the meaning given in Schedule Part 16 (*Change Protocol*);
"Change in Control"	means: (a) any sale or other disposal of any legal, beneficial or equitable interest in any or all of the equity share capital of a corporation (including the control over the exercise of voting rights conferred on that equity share capital, control over the right to appoint or remove directors or the rights to dividends); and/or (b) any other arrangements that have or may have or which result in the same effect as paragraph (a) above;
"Change in Law"	means the coming into effect or repeal (without re-enactment or consolidation) in Scotland of any Law, or any amendment or variation to any Law, or any judgement of a relevant court of law which changes binding precedent in Scotland in each case after the date of this Agreement;
"Clinical Clean"	has the meaning given to it in paragraph 4 (*Clinical Clean*) of Appendix B *(Completion Criteria)* of Schedule Part 10 *(Outline Commissioning Programme)*;
"Change Notice"	means a notice of a Change given in accordance with Schedule Part 16 (*Change Protocol*);
"Clinical Services"	means: (a) the management, responsibility, administration and carrying out of the clinical and medical services provided at the Facilities by or on behalf of the Board from time to time; (b) the provision of training and education required to deliver the services referred to in paragraph (a) above, and which are not services to be provided by the Project Co to the Board under the Project Agreement;
"Collateral Agreements"	means the Contractor's Collateral Agreement, the Design Team Collateral Agreements and the Key Sub-Contractor Collateral Agreements;
"Commencement Date"	means the date of execution of this Agreement;

"Commercially Sensitive Information"	means the sub set of Confidential Information listed in column 1 of Part 1 *(Commercially Sensitive Contractual Provisions)* and column 1 of Part 2 *(Commercially Sensitive Material)* of Schedule Part 26 (*Commercially Sensitive Information*) in each case for the period specified in column 2 of Parts 1 and 2 of Schedule Part 26 (*Commercially Sensitive Information*);
"Commissioners"	has the meaning given in Clause 35.3;
"Commissioning Completion Certificate"	means a certificate in the relevant form set out in Schedule Part 22 (*Certificates*);
"Commissioning End Date"	means the date by which the parties' commissioning activities are programmed to be completed in accordance with the Final Commissioning Programme;
"Common Terms Agreement"	means the common terms agreement, dated on or around the date of this Agreement between, among others, the Funders and the Project Co;
"Compensation Event"	has the meaning given in Clause 29.11;
"Compensation Payment"	has the meaning given in Clause 46.9;
"Completion Criteria"	means the Board Completion Tests as defined in Appendix B of Schedule Part 10 (*Outline Commissioning Programme*);
"Completion Date"	means 3 July 2017 or such revised date as may be fixed pursuant to Clause 29 *(Delay Events)* or such other date as may be agreed by the parties;
"Completion Process"	has the meaning given to it in Schedule Part 10 (*Outline Commissioning Programme*);
"Confidential Information"	means: (a) information that ought to be considered as confidential (however it is conveyed or on whatever media it is stored) and may include information whose disclosure would, or would be likely to, prejudice the commercial interests of any person, trade secrets, Intellectual Property Rights and know-how of either party and all personal data and sensitive personal data within the meaning of the Data Protection Act 1988 and (b) Commercially Sensitive Information;
"Connection Area"	means the area of land shown shaded blue on Plan 2;
"Connection Proposal"	means the agreed Interface Proposal for connection information relating to the connection from the Facilities to the Link Building, as set out

	in Appendix 8 of Schedule Part 31 *(Consort Interface with Campus Site and/or Campus Facilities)* of the Project Agreement;
"Consents"	means all permissions, consents, approvals, certificates, permits, licences, statutory agreements and authorisations required by Law, and all necessary consents and agreements from any third parties (including, without limitation, any Planning Permission), needed to carry out the Project Operations in accordance with this Agreement;
"Consort"	means Consort Healthcare (Edinburgh Royal Infirmary) Limited a company incorporated in Scotland under the Companies Acts (company number SC187449) and having its registered office at Edinburgh Quay, 133 Fountainbridge, Edinburgh EH3 9AG and/or any successor and/or assignee or party acquiring an interest in the Retained Estate and/or Retained Site and/or the RIE Project Agreement;
"Consort Party"	means Consort's agents and contractors of any tier and its or their directors, officers, employees and/or workmen in relation to the Retained Site and/or the Retained Estate and any relevant successors of the same;
"Construction Access"	as defined in paragraph 1.1 of Section (*Construction Access*) of Part 1 (*Interface Construction Issues and Interface Proposals*) of Schedule Part 31 *(Consort Interface with Campus Site and/or Campus Facilities)* of the Project Agreement;
"Construction Access Proposal"	means the agreed Interface Proposal for construction access to the Site over the Yellow Area, and/or Petrol Station Site as set out in Appendix 1 of Schedule Part 31 *(Consort Interface with Campus Site and/or Campus Facilities)* of the Project Agreement;
"Construction Operations"	means the carrying out of the Works, the carrying out of the Contractor's Pre-Completion Commissioning and the Contractor's Post-Completion Commissioning and the performance of all other obligations of the Contractor under this Agreement from time to time;
"Construction Phase"	means the period from and including the date of execution of this Agreement to and including the Actual Completion Date;
"Construction Quality Plan"	means the document at Section 8 (*Quality Plans (Design and Construction)*) of Schedule Part 6 (*Construction Matters*);
"Construction Skills Certification Scheme"	means the scheme operated by Construction Skills Certification Scheme Limited (registered

	under number 03024675) to evidence the identity and skills and competence of persons employed on construction sites;
"Contamination"	means all or any pollutants or contaminants, including any chemical or industrial, radioactive, dangerous, toxic or hazardous substance, waste or residue (whether in solid, semi-solid or liquid form or a gas or vapour) and including without limitation genetically modified organisms;
"Contingent Funding Agreement"	means the parallel loan agreement between the Project Co and Brookfield Multiplex Pty Limited dated on or about the date of this Agreement;
"Contract Manager"	means the person notified to the Contractor by the Project Co from time to time;
"Contract Relief"	has the meaning given in Clause 75.2;
"Contract Sum"	means the Initial Contract Sum or such other sum as shall become payable under this Agreement in respect of the performance of the Contractor's obligations in relation to the Works;
"Contract Year"	means: (a) for the first Contract Year, the period from the date of this Agreement to the subsequent 31 March; and (b) for all subsequent Contract Years, the period of twelve 12 calendar months commencing on each anniversary of 1 April;
"Contractor Event of Default"	has the meaning given in Clause 40.1 (*Contractor Event of Default*);
"Contractor Liability Cap"	means a sum of money equal to 55% of the Contract Sum;
"Contractor Party"	means the Contractor's agents and Subcontractors of any tier and its or their directors, officers, employees and workmen in relation to the Project and **"Contractor Parties"** shall be construed accordingly;
"Contractor Set Off Amount"	means a sum of money that: (a) the Project Co has been ordered to pay to the Contractor in an Adjudicator's award made pursuant to the Dispute Resolution Procedure in Schedule Part 20 (*Dispute Resolution Procedure*); or (b) has become finally due to the Contractor pursuant to Clause 34.12 or Clause 34.25.2 where applicable after the giving of a pay less notice given pursuant to

Clause 34.11 or Clause 34.25.2.

"Contractor's Collateral Agreement"	means a collateral agreement among the Board, the Project Co and the Contractor in the form set out in Section 1 of Schedule Part 9 (*Collateral Agreements with the Board, Project Co and the Security Trustee (Contractor / Key Subcontractors)*);
"Contractor's Post-Completion Commissioning"	means the Contractor's commissioning activities carried out in accordance with Clause 18.1;
"Contractor's Pre-Completion Commissioning"	means Contractor's commissioning activities to be carried out in accordance with Clause 17 (*Pre-Completion Commissioning and Completion*);
"Contractor's Site Manager"	means the manager to be appointed by the Contractor for purposes of supervision of all day-to-day activities on the Site and/or Off-Site;
"Contractor's Site Rules"	means the Contractor's rules, applicable on the Site and/or Off-Site to the Board, the Project Co, the Contractor and their respective sub-contractors and suppliers of every tier during the construction of the Facilities and the Retained Estate Handback Infrastructure;
"Convictions"	means, other than in relation to minor road traffic offences, any previous or pending prosecutions, convictions, cautions and binding-over orders (including any spent convictions as contemplated by section 1(1) of The Rehabilitation of Offenders Act 1974 by virtue of the exemptions specified in Part II of Schedule 1 of the Rehabilitation of Offenders Act 1974 (Exceptions) Order 1975 (SI 1975/1023) and the Rehabilitation of Offenders Act 1974 (Exclusions and Exceptions) (Scotland) Order 2003 Scottish SI 2003/231) or any replacement or amendment to those Orders);
"Cycle Path Infrastructure	means the infrastructure resulting from the Cycle Path Works;
"Cycle Path Works"	means the design (including preparation of all Design Data), construction, testing and commissioning and completion of the works to be undertaken on the cycle path and reconfigure the landscaped areas in accordance with inter alia paragraphs 3.8.4 and 4.5.10C of the Board's Construction Requirements;
"Deemed Liability"	has the meaning given in Clause 46.7.3;
"Default Interest Rate"	means 2% over LIBOR;
"Defects"	means any defect or fault in the Works and/or the Facilities and/or the Retained Estate Handback Infrastructure (not being a Snagging Matter) which occurs due to a failure by the Contractor to meet the Board's Construction Requirements

	and/or the Project Co's Proposals or otherwise to comply with its obligations under this Agreement;
"Defects Liability Period"	means the period of 12 months starting on the date of the issue of the Certificate of Practical Completion as adjusted in accordance with the terms of this Agreement;
"Delay Event"	has the meaning given in Clause 29.3;
"Design Data"	means all drawings, reports, documents, plans, software, formulae, calculations and other data relating to the design, construction, testing and/or operation of the Facilities and/or the Retained Estate Handback Infrastructure;
"Design Quality Plan"	means the document at Section 8 (*Quality Plans (Design and Construction)*) of Schedule Part 6 (*Construction Matters*);
"Design Team"	means the following sub-consultants appointed by the Contractor: (a) TUV SUD Limited (trading as Wallace Whittle), a company registered in Scotland (company number SC215164) whose registered office is at Napier Building, Scottish Enterprise Technology Park, East Kilbride, G75 0QF who shall carry out works packages relating to the mechanical and electrical design and mechanical and electrical engineering including mechanical and electrical systems of the helipad; (b) HLMAD Limited, a company registered in England & Wales (company number 05047778) whose registered office is at Ground Floor, 46 Loman Street, London, SE1 0EH who shall carry out works packages relating to the architectural design; (c) Robert Bird & Partners Limited, a company registered in England & Wales (company number 04472743) whose registered office is at Second Floor North Block, Harling House, 47-51 Great Suffolk Street, London, United Kingdom, SE1 0BS who shall carry out work packages relating to the structural engineering design including but not limited to primary steelwork, pre-cast/reinforced concrete, structural support for the helipad and the geotechnical consultancy services to satisfy the design requirements of the Petrol Station Site Works; (d) Acoustic-Logic Consultancy (UK)

Limited, a company registered in England and Wales (company number 06487654) whose registered office is 12 Russell Gardens, London, W14 8EZ who shall carry out acoustic services relating to the acoustic design;

(e) Ove Arup & Partners Limited, a company registered in England and Wales (company number 01312453) whose registered office is 13 Fitzroy Street, London W1T 4BQ who shall carry out transportation services relating to traffic consultancy;

(f) WSP UK Limited, a company registered in England and Wales (company number 01383511) whose registered office is WSP Home, 70 Chancery Lane, London WC2A 1AF who shall carry out fire engineering services relating to fire engineering;

(g) Ironside Farrar Limited, a company registered in Scotland (company number SC109330) whose registered office is 111 MacDonald Road, Edinburgh, EH7 4NW who shall carry out planning services relative to planning consultancy; and

(h) Brookfield Multiplex CDM Services Europe Limited, a company registered in England (company number 06324496) whose registered office is 99 Bishopsgate, Second Floor, London EC2M 3XD who shall carry out works packages relating to CDM Co-ordinator;

"Design Team Appointment" means an appointment between the Contractor and a person in the Design Team;

"Design Team Collateral Agreements" means the collateral warranties in the form set out in Section 4 and Section 5 of Schedule Part 9 (*Collateral Agreements with the Board, Project Co and the Security Trustee (Contractor / Key Subcontractors)*) from the Design Team in favour of the Project Co and the Funders;

"Direct Losses" means, subject to the provisions of Clause 54.1, all damage, losses, liabilities, claims, actions, costs, expenses (including the cost of legal or professional services, legal costs being on an agent/client, client paying basis), proceedings, demands and charges whether arising under statute, contract or at common law but, to avoid doubt, excluding:

(a) Indirect Losses; and

(b) any deductions levied by the Board and incurred by Consort pursuant to the payment mechanism within the RIE Project Agreement.

"Disclosed Data" means any Design Data and any other written information, data and documents made available or issued to the Contractor or any Contractor Party in connection with the Project by or on behalf of the Board (or any Board Party) or the Project Co or any Project Co Party whether on, before or after the execution of this Agreement;

"Discriminatory Change in Law" means any Change in Law the effect of which is to discriminate directly against:

(a) hospitals whose design, construction, financing and operation are procured under the private finance initiative in relation to other similar projects; or

(b) companies undertaking projects procured by contracts under the private finance initiative in relation to other companies undertaking similar projects; or

(c) the Facilities in relation to other similar hospital facilities; or

(d) Contractor in relation to other companies,

save that:

(i) such action shall not be a Discriminatory Change in Law where it is in response to any act or omission on the part of the Project Co or the Contractor which is illegal (other than an act or omission rendered illegal by virtue of the Discriminatory Change in Law itself);

(ii) such action shall not be deemed to be discriminatory solely on the basis that its effect on the Project Co or the Contractor is greater than its effect on other companies; and

(iii) a change in taxes or the introduction of a tax affecting companies generally or a change in VAT shall be deemed not to be discriminatory in any circumstances (to avoid doubt, such changes being given effect in accordance with Clause 35 (*VAT and Construction Industry Tax Deduction Scheme*);

"Dispute" has the meaning given in paragraph 1 of Schedule Part 20 (*Dispute Resolution Procedure*);

"Dispute Resolution Procedure"	means the procedure set out in Schedule Part 20 (*Dispute Resolution Procedure*);
"Effective Date"	means the date on which all of the conditions precedent to effectiveness of the Project Agreement are satisfied and the Project Agreement becomes unconditional and fully executed;
"Encumbrance"	means any option, right of pre-emption, pledge, security, interest, lien, charge, mortgage, lease, licence, claim, condition, retention or other encumbrance or restriction whether imposed by agreement, by law or otherwise;
"Energy Model"	means the software energy model approved by the Board and used to inform compliance of the Project Co's Proposals with the Energy Performance criteria;
"Energy Performance"	means the Board's requirements in relation to achieving a minimum performance for BREEAM credit ENE 01 and a minimum Energy Performance Certificate rating, as set out in the Board's Construction Requirements;
"Environmental Claims"	means any claim, demand, liability or loss of whatsoever nature arising out of or in connection with Contamination or other environmental matters;
"Environmental Information (Scotland) Regulations"	means the Environmental Information (Scotland) Regulations 2004 together with any guidance and/or codes of practice issued by the Scottish Information Commissioner or relevant Government Department in relation to such regulations;
"Equipment"	means the Group 1 Equipment, the Group 2A Equipment, the Group 2B Equipment and/or the Group 3 Equipment;
"Facilities"	means the buildings and other facilities, together with all supporting infrastructure (including the Plant and the Group 1 Equipment), external hard-standings, specialist surfaces and other amenities located on the Site and Off-Site (excluding the Retained Estate Handback Infrastructure but including as a minimum all aspects detailed within Appendix B to Section 1 (*Service Level Specification*) of Schedule Part 12 (*Service Requirements*) of the Project Agreement, as required to enable the Project Co to comply with its obligations under this Agreement, all as the same may be varied, amended or supplemented from time to time in accordance with this Agreement;
"Fees Regulations"	means the Freedom of Information (Fees for Required Disclosure (Scotland)) Regulations

	2004;
"Final Commissioning Programme"	means the programme jointly developed and agreed by the Board and the Project Co in accordance with the provisions of Clause 17.1;
"Financial Close"	means the date of this Agreement;
"Financial Close Energy Model"	means the Project Co's Energy Model as agreed with the Board at Financial Close to inform compliance of the Project Co's Proposals with the Board's Energy Performance requirements for the Facilities as detailed in Section 3 (*Board's Construction Requirements*) of Schedule Part 6 (*Construction Matters*);
"Finishes"	means those finishes listed in the table set out in paragraph 1.2.3 of Schedule Part 8 (*Review Procedure*);
"Finishes Proposal Date"	means, in relation to a Finish, the relevant date identified in the table set out in paragraph 1.2.3 of Schedule Part 8 (*Review Procedure*);
"Finishes Selection Date"	means, in relation to a Finish, the relevant date identified in the table set out in paragraph 1.2.3 of Schedule Part 8 (*Review Procedure*);
"Fire Alarm System"	means the fire alarm system to be installed as part of the Works and thereafter maintained by the Project Co as more fully described in 4.5.10(A) of the Board's Construction Requirements;
"First Party"	has the meaning given in Clause 35.3;
"FOI(S)A"	means the Freedom of Information (Scotland) Act 2002 and any subordinate legislation (as defined in section 73 of the Freedom of Information (Scotland) Act 2002) made under the Freedom of Information (Scotland) Act 2002 from time to time together with any guidance and/or codes of practice issued by the Scottish Information Commissioner or relevant Government department in relation to such Act;
"Force Majeure"	has the meaning given in Clause 31 (*Force Majeure*);
"Foul Service Strip"	means the area shaded yellow and hatched black on Plan 2A;
"Foul Water Drainage"	means the foul water drainage to be installed as part of the Works and thereafter maintained by the Project Co, as more fully described in paragraphs 4.5.10 of section B, 6.11 and 8.7.20 of the Board's Construction Requirements;
"Funder's Technical Adviser"	means Sweett (UK) Limited or any replacement person appointed by the Funders and notified to

	the Contractor from time to time to carry out the services as the Funders' technical adviser under this Agreement;
"Funders"	means all or any of the persons who provide financing or funding in respect of the Project Operations under the Funding Agreements including the Security Trustee and, where the context so permits, prospective financiers or funders;
"Funders' Direct Agreement with the Contractor"	means the agreement to be entered into between the, the Senior Funders, the Project Co and the Contractor in the form set out in Schedule Part 4 (*Funders' Direct Agreement*);
"Funding Agreements"	means all or any of the agreements or instruments to be entered into by the Project Co or any of its Associates relating to the financing of the Project Operations (including the Initial Funding Agreements (as defined in the Project Agreement) and any agreements or instruments to be entered into by the Project Co or any of its Associates relating to the rescheduling of their indebtedness or the refinancing of the Project Operations);
"Good Industry Practice"	means using standards, practices, methods and procedures conforming to the Law and exercising that degree of skill and care, diligence, prudence and foresight which would reasonably and ordinarily be expected from a skilled and experienced person engaged in a similar type of undertaking under the same or similar circumstances;
"Government"	means the government of the United Kingdom or the Scottish Ministers;
"Ground Physical and Geophysical Investigation"	means the investigation procured by the Board dated 25th July 2013 together with a supplemental report dated 27th August 2013 of all the conditions of and surrounding the Site and of any extraneous materials in, on or under the Site (including its surface and subsoil) to enable the Facilities (other than those parts of the Facilities to be constructed Off-Site) to be designed and constructed and the Works to be carried out with due regard for those conditions and the seismic activity (if any) in the region of the Site;
"Group 1 Equipment"	means the equipment indicated as 1 in the "Group" column of the Equipment Responsibilities Matrix;
"Group 2A Equipment"	means the equipment indicated as 2A in the "Group" column of the Equipment Responsibilities Matrix;

"Group 2B Equipment"	means the equipment indicated as 2B in the "Group" column of the Equipment Responsibilities Matrix;
"Group 3 Equipment"	means the equipment indicated as 3 in the "Group" column of the Equipment Responsibilities Matrix;
"Guarantor"	means Brookfield Multiplex Pty Limited (Company Number ACN 147 631 472);
"H&S Conviction"	has the meaning given in Clause 40.1.8;-
"Handover Clean"	has the meaning given in paragraph 3 *(Handover Clean)* of Appendix B *(Completion Criteria)* of Schedule Part 10 *(Outline Commissioning Programme);*
"Hatched Orange Area"	means the areas of land shown coloured orange and hatched in black on Plan 2, which form part of the Orange Area;
"Health and Safety Regime"	means the Food Safety Act 1990 (and associated regulations), the Health & Safety at Work etc Act 1974 (and associated regulations), the Fire Precautions Act 1971, the Environmental Protection Act 1990 and the Water Industry (Scotland) Act 2002 and any similar or analogous health, safety or environmental legislation in force from time to time;
"Health Board"	means a health board established under section 2 of the National Health Service (Scotland) Act 1978 (or any successor body to any such body established with substantially the same powers or duties);
"High Value Change Stage 2 Submission"	has the meaning given in Schedule Part 16 (*Change Protocol*);
"Hold Co"	means IHS Lothian (Holdings) Limited;
"Holding Company"	has the meaning given to it in section 1159 of the Companies Act 2006;
"Hospital Square"	means the areas shaded orange and hatched black on Plan 2, which form part of the Orange Area;
"Hospital Square Infrastructure"	means the infrastructure resulting from the Hospital Square Works;
"Hospital Square Works"	means the design (including preparation of all Design Data) construction, testing and commissioning and completion of the works to be undertaken in Hospital Square in accordance with inter alia paragraph (*Site Specific Requirements*) of Subsection C of the Board's Construction Requirements;

"Hours of Operation"	has the meaning given in Appendix 2 of Schedule Part 8 (*Review Procedure*);
"ICT"	means the information communications technology to be installed as part of the Works and thereafter maintained by the Project Co, as more fully described in paragraph 9 (*Information and Communication Technology ("ICT") Requirements*) of Subsection C of Board's Construction Requirements;
"Indemnifier"	has the meaning given in Clause 49.3 (*Conduct of claims*);
"Indemnity Period"	has the meaning given to it in Schedule Part 15 (*Insurance Requirements*);
"Independent Tester"	means E.C. Harris LLP (registered under number OC368843) whose registered office is at EC HQ 34 York Way, London N1 9AD or such substitute independent tester as may be permitted pursuant to this Agreement;
"Independent Tester Contract"	means the contract dated the same date as this Agreement in the form set out in Schedule Part 13 (*Independent Tester Contract*) or any replacement thereof among the Project Co, the Board and the Independent Tester;
"Indirect Losses"	has the meaning given in Clause 54.1 (*Exclusions and Limitations on Liability*);
"Information"	has the meaning given under section 73 of the Freedom of Information (Scotland) Act 2002;
"Initial Contract Sum"	means the fixed lump sum of £150,374,000 such sum being inclusive of all taxes (except VAT and property and land taxes) levies, duties, charges and fees in relation to the Works
"Initial Drainage Proposal"	means the proposal in regard to works to install new Surface Water Drainage Works connections from the Site to the surface water drainage within the RIE Site detailed in Appendix E of the Board's Construction Requirements;
"Insurance Proceeds Account"	means the account numbered 326322 with IBAN GB49SMBC40512500326322 in the joint names of the Project Co and the Board with the Account Bank (as defined in the Funding Agreement);
"Insurance Proceeds Account Agreement"	has the meaning set out in the Project Agreement;
"Insurance Term"	means any term and/or condition required to be included in a policy of insurance by Clause 53 (*Insurance*) and/or Schedule Part 15 (*Insurance Requirements*) but excluding any risk;

"Insurances"	means, as the context requires, all or any of the insurances required to be maintained by the Project Co and/or the Contractor pursuant to this Agreement;
"Intellectual Property"	means all registered or unregistered trademarks, service marks, patents, registered designs, utility models, applications for any of the foregoing, copyrights, unregistered designs, the sui generis rights of extraction relating to databases, trade secrets and other confidential information or know-how;
"Intellectual Property Rights"	means the Intellectual Property which (or the subject matter of which) is created, brought into existence, acquired, used or intended to be used by the Contractor any Contractor Party or by other third parties (for the use by or on behalf of or for the benefit of the Contractor) for the purposes of the design or construction of the Facilities and the Retained Estate Handback Infrastructure, the operation, maintenance, improvement and/or testing of the Facilities and Retained Estate Handback Infrastructure or the conduct of any other Construction Operation or otherwise for the purposes of this Agreement;
"Interface Agreement"	means an agreement in writing in the form in Schedule Part 36 (*Interface Agreement*) between the Project Co, the Contractor and the Services Provider;
"Interface Output Specification"	means the document detailing interfaces between the Facilities and the Link Building and/or the RIE Facilities set out in Appendix B of the Board's Construction Requirements;
"Interface Proposals"	means any of the Access Strategy, Connection Proposal, Construction Access Proposal, Oversail Strategy, Service Proposal, Supplemental Drainage Proposal, Traffic Management Strategy, and any strategy or proposal agreed or determined pursuant to the terms of Part 2 (*Interface Proposals Procedure*) of Schedule Part 31 *(Consort Interface with Campus Site and/or Campus Facilities)* of the Project Agreement, which Interface Proposals form part of the Project Co's Proposals and Method Statements;
"IT"	means information technology systems, hardware and software;
"Joint"	means the isolation/movement joint within the Connection Area between the Facilities and the Link Building, as more particularly referred to at paragraph 2.3 of the Interface Output Specification;

"Key Sub-Contractor Appointment" means a contract between the Contractor and the Key Sub-Contractor;

"Key Sub-Contractor" means the sub-contractors, including the Design Team, appointed to complete the following works packages:

(a) mechanical and engineering electrical and PTS;

(b) connections design only in relation to primary steelwork and secondary steelwork;

(c) roofing (excluding green and bituminous ballast/slab roofs);

(d) cladding and windows (to the extent that design liability is not covered by the package set out in limb (e) of this definition);

(e) curtain walling and windows (to the extent that design liability is not covered by the package set out in limb (d) of this definition);

(f) structural glass (glazed ballustrades);

(g) helipad;

(h) lifts;

(i) piling;

(j) SFS;

(k) external canopies;

(l) precast concrete (stairs, landings and edge beams only); and

(m) catering facilities;

"Key Sub-Contractor Collateral Agreements" means the collateral agreement among the Board, the Project Co, the Security Trustee, the Contractor and the Key Sub-Contractors as applicable in the form set out in Sections 3 to 7 of Schedule Part 9 (*Collateral Agreements with the Board, Project Co and the Security Trustee (Contractor / Key Subcontractors)*);

"Law" means:

(a) any applicable statute or proclamation or any delegated or subordinate legislation;

(b) any enforceable community right within the meaning of section 2(1) of the European Communities Act 1972;

(c) any applicable guidance, direction or determination with which the Board and/or the Project Co and/or the Contractor is bound to comply to the extent that the same are published and publicly available or the existence or contents of them have been notified to the Project Co and the Contractor; and

(d) any applicable judgement of a relevant court of law which is a binding precedent in Scotland,

in each case in force in Scotland;

"Letter of Reliance" means the letters of reliance addressed to the Contractor by Raeburn Drilling & Geotechnical Ltd dated 15 December 2014;

"LIBOR" means the rate per annum administered by ICE Benchmark Administration Limited (or any other person which takes over the administration of that rate) for six month Sterling deposits in the London interbank market displayed (before any correction, recalculation or republication by the administrator) on pages LIBOR 01 or LIBOR 02 of the Thomson Reuters screen (or any appropriate replacement screen which displays that rate) and if, in either case, that rate is less than zero, LIBOR shall be deemed to be zero ;

"Link Building" means the extension to the RIE Facilities constructed or to be constructed within the Connection Area by or on behalf of the Board pursuant to the Interface Output Specification;

"Liquidated Damages Cap" means the capped amount set out in Schedule Part 33, (*Liquidated Damages*) Part B;

"Little France Campus Working Group" has the meaning given to it in Clause 8A.1 *(Little France Campus Working Group)*;

"Little France Campus Working Group Parties" means the Board, Consort, the University, the Project Co and the relevant Sub-Contractor;

"Little France Steading" means subjects extending to 0.242 hectares forming Little France Steading shown outlined in red on Plan 10;

"Long Stop Date" means a period of twelve (12) months after the Completion Date;

"Low Value Change" has the meaning given in Schedule Part 16 (*Change Protocol*);

"Major Incident" means the widely accepted term used by the emergency services to describe any emergency that requires the implementation of special arrangements by one or more of the emergency services, the NHS, the Board or the local authority;

"Mac Co" means IHS Lothian Corporate Limited (company number 09359625)

"Maximum Payment Schedule" means the maximum payment schedule set out in Schedule Part 14 (*Contract Sum and Payment Schedule*);

"Medium Value Change" has the meaning given in Schedule Part 16 (*Change Protocol*);

"Method Statements" means the method of providing a Service as set out or identified in Section 2 (*Method Statements*) of Schedule Part 12 (*Service Requirements*) of the Project Agreement as amended from time to time in accordance with Clause 33 (*Change Procedure*) and Clause 22 (*The Services*) of the Project Agreement;

"NHS" means the National Health Service;

"NHS Requirement" means:

(a) in relation to the Works, Health Building Notes and Health Technical Memoranda and such other requirements as are designated as NHS Requirements in the Board's Construction Requirements; and

(b) in relation to the Project Operations (other than the Works), Health Building Notes, Health Technical Memoranda, all Executive Letters, Health Service Guidelines, Health Circulars of the NHS and any similar official requests, requirements and guidance having similar status for the time being in force, but only to the extent the same are published and publicly available or the existence and contents of them have been notified to the Contractor by the Project Co;

"Non-Clinical Services" has the meaning set out in Sub-Section E *(Specific Non-Clinical Requirements)* of the Board's Construction Requirements;

"Off-Site" means:

(a) the land made available to Contractor for the Works and the Off-Site Works being:

(i) the Yellow Area, the Petrol Station Site, the Orange Area,

	the Connection Area and the Service Strip; and (ii) the Foul Service Strip; (iii) [Not Used] (b) those parts of the RIE Facilities made available to the Project Co for the Off-Site Works and Services; and (c) the land procured by the Contractor for the Substation Works;
"Off-Site Conditions"	means the condition of the Off-Site (including but not limited to) hydrological, hydrogeological, ecological, environmental, geotechnical and archaeological conditions;
"Off-Site Works"	means the RIE Works, Hospital Square Works, Cycle Path Works, Substation Works, Petrol Station Site Works and/or Surface Water Drainage Works;
"Operational Functionality"	has the meaning given in the Project Agreement;
"Operational Term"	has the meaning given in the Project Agreement;
"Orange Area"	means the area of land shaded orange on Plan 2 including for the avoidance of doubt the Hatched Orange Area;
"Outline Commissioning Programme"	means the programme setting out the standards, specifications, procedures and other requirements for the carrying out and completion of the commissioning activities of the Contractor and the Board set out in outline in Schedule Part 10 (*Outline Commissioning Programme*);
"Oversail Strategy"	means the agreed Interface Proposal for oversailing parts of the Campus Site other than the Facilities, as set out in Appendix 3 of Schedule Part 31 *(Consort Interface with Campus Site and/or Campus Facilities)* of the Project Agreement;
"Parent Company Guarantee"	means the guarantees in the form set out in Schedule Part 35 (*PARENT COMPANY GUARANTEE*);
"Performance Bond"	means the on demand performance bond for 3% of the Contract Sum and the adjudication bond for 7% of the Contract Sum as relevant in the form set out in Schedule Part 32 (*Community Benefits*);
"Performance Bond Provider"	means a bank with the Required Credit Rating approved in writing by the Project Co;

"Petrol Station Site"	means the area outlined in pink set out on Plan 2;
"Petrol Station Site Contamination Investigation"	means the investigation procured by the Board dated 26 June 2014 of the conditions on the Petrol Station Site and of any extraneous materials in, on or under the Petrol Station Site (including its surface and subsoil) to enable the Petrol Station Site Works to be carried out with due regard for those conditions and the seismic activity (if any) in the region of the Petrol Station Site;
"Petrol Station Site Infrastructure"	means the infrastructure resulting from the Petrol Station Site Works;
"Petrol Station Site Works"	means the design (including preparation of all Design Data), construction, remediation, demolition, testing and commissioning and completion of the works to be undertaken in relation to the Petrol Station Site as set out in paragraph 4.6 of the Board's Construction Requirements;
"Physical Damage Policies"	means the policies of insurance referred to in Section 2 (*Policies to be Taken out by Project Co and Maintained During the Design and Construction Phase*) of Schedule Part 15 (*Insurance Requirements*);
"Plan 1"	means the plan marked "Plan 1 *(RHSC & DCN Site)"* annexed and executed as relative hereto and contained in Schedule Part 27 *(Plans);*
"Plan 2"	means the plan marked "Plan 2 *(Yellow Area, Orange Area, Connection Area, Service Strip and Substation Access Area and Petrol Station Site"* annexed and executed as relative hereto and contained in Schedule Part 27 *(Plans);*
"Plan 2A"	means the plan marked "Plan 2A *(Foul Service Strip)*" annexed and executed as relative to this Agreement and contained in Schedule Part 27 *(Plans);*
"Plan 3"	means the plan marked "Plan 3 *(Car Park E)"* annexed and executed as relative to this Agreement and contained in Schedule Part 27 *(Plans);*
"Plan 5"	means the plan marked "Plan 5 *(Car Park Layout Plan)"* annexed and executed as relative hereto and contained in Schedule Part 27 *(Plans);*
"Plan 6"	means the plan marked "Plan 6 *(Roads Layout)"* annexed and executed as relative to this Agreement and contained in Schedule Part 27 *(Plans);*
"Plan 7"	means the indicative plan marked "Plan 7 *(Campus Site Plan)"* annexed and executed as

	relative to this Agreement and contained in Schedule Part 27 *(Plans);*
"Plan 8"	means the plan marked "Plan 8 *(Access Roads)"* annexed and executed as relative to this Agreement and contained in Schedule Part 27 *(Plans);*
"Plan 9"	means the plan marked "Plan 9 *(217 Old Dalkeith Road)"* annexed and executed as relative to this Agreement and contained in Schedule Part 27 *(Plans);*
"Plan 10"	means the plan marked "Plan 10 *(Little France Steading)"* annexed and executed as relative to this Agreement and contained in Schedule Part 27 *(Plans);*
"Plan 11"	means the plan marked "Plan 11 *(Sewer)"* annexed and executed as relative to this Agreement and contained in Schedule Part 27 *(Plans);*
"Planning Approval"	means planning permission in principal for the Project given reference number 11/02454/PPP by the City of Edinburgh Council and dated 5 April 2012, and annexed as Attachment 2;
"Planning Permission"	means any planning permission, approval of matters specified in conditions attached to any planning permission in principle listed building consent, conservation areas consent and/or other consent or approval reasonably required from time to time for construction of the Facilities and the construction of the Retained Estate Handback Infrastructure (including without limitation for any Board Change and the Planning Approval);
"Plant"	means the infrastructure systems, building systems, fixed, and immovable equipment systems, installed to be provided by the Project Co pursuant to the Project Agreement;
"Post Completion Commissioning"	means, as appropriate, the Contractor's Post Completion Commissioning and/or the Board's Post Completion Commissioning;
"Pounds Sterling"	means the currency issued by the Bank of England from time to time;
"Pre Completion Commissioning"	means, as appropriate, the Contractor's Pre Completion Commissioning, and/or the Project Co's Pre Completion Commissioning;
"Programme"	means the programme set out in Schedule Part 7 (*The Programme*) as revised and issued by the Contractor from time to time pursuant to Clause 14 (*Programme and Dates for Completion*);

"Progress Milestone"	means a milestone shown in the Progress Milestone Schedule;
"Progress Milestone Schedule"	means the Progress Milestone schedule in Schedule Part 14 (*Contract Sum and Payment Schedule*);
"Prohibited Act"	has the meaning given in Clause 44 (*Corrupt Gifts and Payments*);
"Project"	has the meaning given in Recital B of the Project Agreement;
"Project Co Event of Default"	has the meaning given in Clause 40A (*Project Co Events of Default*);
"Project Co Party"	means the Project Co's agents and contractors but excluding the Contractor and any Contractor Party and the Service Provider and any Service Provider Party and its or their agents, contractors and subcontractors of any tier and its or their directors, officers, employees and workmen in relation to the Project and **"Project Co Parties"** shall be construed accordingly;
"Project Co's Community Benefits Method Statements"	means those method statements set out in Section 2 of Schedule Part 32 (*Community Benefits*);
"Project Co's Proposals"	means the document at Section 4 (*Project Co's Proposals*) of Schedule Part 6 (*Construction Matters*) as amended from time to time in accordance with Clause 33 (*Change Procedure*);
"Project Co's Representative"	means the person appointed by the Project Co pursuant to Clause 8 (*Representatives*);
"Project Data"	means: (a) all Design Data; (b) all drawings, reports, documents, plans, software, formulae, calculations and other data relating to the provision of the Services; and (c) any other materials, documents and or data acquired, brought into existence or used in relation to the Project Operations or this Agreement;
"Project Documents"	means the Project Agreement, the Funding Agreements, the Service Contract, the Parent Company Guarantee, the Performance Bond, the Interface Agreement, the Funders' Direct Agreement with the Contractor the Contingent Funding Agreement, the Contractor's Collateral Agreement with the Board, the Design Team Collateral Agreements and the Key

	Sub-Contractor Collateral Agreements;
"Project Operations"	means the carrying out of the Works, the carrying out of the Contractor's Pre-Completion Commissioning and the Contractor's Post-Completion Commissioning, the maintenance of the Facilities (including the renewal or replacement of Plant) the management and provision of the Services and the performance of all other obligations of the Project Co under this Agreement from time to time;
"Project Term"	has the meaning given in the Project Agreement;
"PTS"	means the pneumatic tube system to be installed as part of the Works and thereafter maintained by the Project Co, as more fully described in paragraph 8.7.23 *(Pneumatic Air Tube Transport System)* of the Board's Construction Requirements;
"Quality Plans"	means the Design Quality Plan and Construction Quality Plan, prepared in accordance with Section 8 (*Quality Plans (Design and Construction)*) of Schedule Part 6 (*Construction Matters*), as required to be implemented by the Contractor in accordance with Clause 20 (*Quality Assurance*);
"Range of Finishes"	has the meaning given in paragraph 1.2.3(a) of Schedule Part 8 (*Review Procedure*);
Regulatory Authority	means any competent authority having powers and duties in relation to the enforcement of any law rule regulation or obligation existing adopted made commenced introduced or otherwise brought into force prior to or after this transfer concerning the protection of human health the Environment or any Relevant Substances and for the avoidance of doubt the expression 'Regulatory Authority' shall not include any court of law, and "Regulatory Authorities" shall be construed accordingly;
"Reinstatement Plan"	has the meaning given in Clause 53.22.2 (*Reinstatement*);
"Reinstatement Works"	has the meaning given in Clause 53.22.8;
"Relevant Authority"	means any court with the relevant jurisdiction and any local, national or supra-national agency, inspectorate, minister, ministry, official or public or statutory person of the government of the United Kingdom, or of the European Union, (or of the Scottish Government or the Scottish Parliament);
"Relevant Change in Law"	has the meaning given in Clause 32.3 (*Changes in Law*);

"Relevant Event"	has the meaning given in Schedule Part 16 (*Change Protocol*);
"Relevant Incident"	has the meaning given in Clause 53.22 (*Reinstatement*);
"Relevant Petrol Station Site Contamination"	means: (a) Contamination in, on, at, over or under the Petrol Station Site; and (b) Contamination that has migrated from the Petrol Station Site to the Site or Off-Site (excluding the Petrol Station Site) after the Commencement Date, save to the extent that: (i) the implementation of cleaning up and/or mitigation measures and/or otherwise dealing with such Contamination is within the scope of the Petrol Station Site Works to be carried out by the Contractor; or (ii) such Contamination (A) arises, (B) is aggravated or disturbed by, (C) increases in concentration, (D) necessitates the implementation of cleaning up and/or mitigation measures and/or (E) otherwise requires to be dealt with (in any of these cases) as a result of an act and/or omission of the Contractor or any Contractor Party or any failure by the Contractor or any Contractor Party to carry out the Construction Operations in accordance with this Agreement;
"Relevant Tax Liability"	has the meaning given in Clause 46.7.3;
"Relief"	has the meaning given in Clause 46.7.1;
"Relief Events"	has the meaning given in Clause 30 (*Relief Events*);
"Request for Information"	has the meaning set out in the FOI(S)A or the Environmental Information (Scotland) Regulations as relevant (where the meaning set out for the term "request" shall apply);
"Required Credit Rating	means A – (Standard & Poors) and A3 (Moody's);
"Reserved Rights"	means the matters referred to in Section 2 *(Reserved Rights)* of Schedule Part 5 *(Land Matters);*

"Retail Prices Index" or "RPI"	means the Retail Prices Index (All Items) as published by the Office for National Statistics from time to time (the "**Index**"), or, failing such publication or in the event of a fundamental change to the Index, such other index as the parties may agree, or such adjustments to the Index as the parties may agree (in each case with the intention of putting the parties in no better nor worse position than they would have been in had the Index not ceased to be published or the relevant fundamental change not been made) or, in the event that no such agreement is reached, as may be determined in accordance with the Dispute Resolution Procedure;
"Retained Estate"	means the RIE Facilities and the University Facilities;
"Retained Estate Handback Infrastructure"	means the infrastructure to be handed back to the Board at or prior to the Actual Completion Date, comprising the Hospital Square Infrastructure, Cycle Path Infrastructure, Petrol Station Site Infrastructure, Surface Water Drainage Infrastructure and Bus Stop Infrastructure;
"Retained Estate Handback Works"	means the Hospital Square Works, Cycle Path Works, Surface Water Drainage Works, the Petrol Station Site Works and the Bus Stop Works;
"Retained Estate Handback Works Completion Criteria"	has the meaning given to it in paragraph 6 *(Retained Estate Handback Infrastructure Completion Criteria)* of Appendix B *(Completion Criteria)* of Schedule Part 10 (*Outline Commissioning Programme*);
"Retained Site"	means the Campus Site under exception of the Site;
"Reviewable Design Data"	means the Design Data listed at Section 5 (*Reviewable Design Data*) of Schedule Part 6 (*Construction Matters*);
"RIE Facilities"	means the existing hospital, buildings and other facilities together with all supporting infrastructure and amenities located on the RIE Site as such hospital, buildings, facilities, infrastructure and amenities may be modified from time to time;
"RIE Infrastructure"	means the infrastructure resulting from the RIE Works;
"RIE Project"	means the financing, design, construction equipping and operation of, and the provision of certain services in connection with the RIE Facilities and the University Facilities;
"RIE Project Agreement"	means the private finance initiative agreement between the Board and Consort in relation to the

	RIE Project;
"RIE Site"	means the Campus Site under exception of the Site and the University Site;
"RIE Works"	means the design (including preparation of all Design Data), construction, testing, commissioning and completion of the works to be undertaken at the RIE Site and/or the RIE Facilities in accordance with inter alia paragraph (*Site Specific Requirements*) of Subsection C of the Board's Construction Requirements (as varied, amended or supplemented from time to time in accordance with this Agreement), namely the PTS, ICT, Foul Water Drainage, Joint and Fire Alarm System;
"Room Data Sheets"	has the meaning given in Section 6 (*Room Data Sheets*) of Schedule Part 6 (*Construction Matters*);
"Schedule of Condition"	shall have the meaning given to it in paragraph 2.1 (Schedules of Condition) Part 3 (*General Matters*) of Schedule Part 31 (*Consort Interface with Campus Site and/or Campus Facilities*) of the Project Agreement;
"Scottish Futures Trust"	means Scottish Futures Trust Limited (Company Number SC348382), having its registered office at 1st Floor, 11-15 Thistle Street, Edinburgh EH2 1DT;
"Second Party"	has the meaning given in Clause 35.3;
"Security Interest"	has the meaning given in the Funders' Direct Agreement;
"Security Trustee"	means Prudential Trustee Company Limited;
"Senior Funders"	means the Senior Lenders and the Senior Subordinated Lenders, as such terms are defined respectively in the Common Terms Agreement;
"Service Contract"	means the contract dated the same date as this Agreement between the Project Co and the Service Provider, by which the Project Co will procure the performance of the Services (as amended or replaced from time to time in accordance with the Project Agreement);
"Service Level Specification"	means the requirements of the Board set out in Section 1 of Schedule Part 12 (*Service Requirements*) of the Project Agreement as amended from time to time in accordance with the Project Agreement;
"Service Proposal"	means the agreed Interface Proposal in respect of the route, depth and size (having regard to the condition of existing service media in the Service Strip and Foul Service Strip) for laying and

	maintaining service media in the Service Strip and/or foul drainage in the Foul Service Strip as applicable, as set out in Appendix 7 of Schedule Part 31 of the Project Agreement;
"Service Provider"	means Bouygues E&S FM UK Limited (registered under number 04243192) whose registered office is at Waterloo Centre, Elizabeth House, 39 York Road, London SE1 7NQ or any other person engaged by the Project Co from time to time as may be permitted by the Project Agreement to procure the provision of the Services (or any part of them);
"Service Provider Party"	means the Service Provider's agents and contractors and its or their sub-contractors of any tier and its or their directors, officers, employees and workmen in relation to the Project and "**Service Provider Parties**" shall be construed accordingly;
"Service Strip"	means the area shaded yellow and hatched black on Plan 2;
"Services"	means the services to be provided, managed and/or procured by the Project Co for the Board in relation to the Facilities in accordance with Schedule Part 12 (*Service Requirements*) of the Project Agreement as subsequently amended or adjusted in accordance with the Project Agreement;
"Sewer"	means the sewer, the expected route of which within the Site is shown red and to be located within the area of land shaded green on Plan 11;
"Site"	means the land made available to the Contractor for the Works delineated in a broken red line on "Plan 1";
"Site Conditions"	means the condition of the Site including (but not limited to) climatic, hydrological, hydrogeological, ecological, environmental, geotechnical and archaeological conditions;
"Snagging Matters"	means minor items of outstanding work (including in relation to landscaping) which would not materially impair the Board's use and enjoyment of the Facilities and/or Retained Estate and/or the Retained Estate Handback Infrastructure or the carrying out by the Board of the Board Services or the performance of the Services by the Project Co and/or the carrying out of any services pursuant to the RIE Project Agreement;
"Snagging Notice"	means the notice to be issued by the Independent Tester in accordance with Clause 17.4;

"Specific Change in Law" means:

(a) any Change in Law which specifically refers to:

(i) the provision of works the same as or similar to the Works in premises similar to the Facilities; or

(ii) Not Used

(b) any change in a NHS Requirement (other than any NHS Requirement which merely gives effect to Law generally and does not principally affect or principally relate to the provision or operation of the Facilities or healthcare premises);

"Stop Incident" means a failure by Contractor to carry out the relevant part or parts of the Constructions Operations in accordance with:

(a) Schedule Part 31 *(Consort Interface with Campus Site and/or Campus Facilities)* of the Project Agreement and/or the Interface Proposals; and/or

(b) any provision of this Agreement and such breach gives rise to an immediate and serious threat to the health and safety of any user of the Site, Off-Site, Retained Site and/or the Retained Estate (which for the avoidance of doubt shall include any adverse impact upon clinical services at the RIE Facilities) during the Construction Phase; and/or

(c) paragraphs 4.4.3(b), 4.4.3(e), 4.5.1A, 4.5.12, 6.1.1, 6.1.2 and/or 7.6(j) of Sub-section C of the Board's Construction Requirements;

"Stop Log Book" means a log book to be maintained by the Contractor pursuant to Clause *13A.9 (Project Co's Right to Stop Construction Operations During the Construction Phase)* in relation to the dates, timings and reasons for stopping and re-starting the relevant part or parts of the Project Operations;

"Sub-Contractor" means any third party (including the Contractor) who enters into any Sub-Contract;

"Sub-Contracts" means the contracts entered into by or between, the Contractor and other third parties in relation to any aspect of the Construction Operations;

"Subsidiary" has the meaning given to it in Section 1159 of the

	Companies Act 2006;
"Supplemental Drainage Proposal"	means the agreed Interface Proposal for Surface Water Drainage Works connections in the Orange Area, as set out in Appendix 5 of Schedule Part 31 *(Consort Interface with Campus Site and/or Campus Facilities)* of the Project Agreement;
"Surface Water Drainage Infrastructure"	means the surface water infrastructure resulting from the Surface Water Drainage Works;
"Surface Water Drainage Works"	means the design (including preparation of all Design Data), construction, testing and commissioning and completion of the surface water drainage works connections to be undertaken in accordance with inter alia paragraphs 4.10.5 of section C, 6.11 and 8.7.20 of Subsection C of the Board's Construction Requirements and the Initial Drainage Proposal and/or the Supplemental Drainage Proposal;
"Termination Date"	means the date on which termination of this Agreement takes effect in accordance with its terms;
"The NHS and You"	means the document so entitled and issued by the Scottish Government Health Directorate in January 2009;
"Title Conditions"	means title conditions set out in Section 1 of Schedule Part 5 (*Land Matters*);
"Traffic Management Strategy" or **"TMS"**	means the agreed Interface Proposal in relation to the traffic management strategy for construction access over the Orange Area, as set out in Appendix 2 of Schedule Part 31 *(Consort Interface with Campus Site and/or Campus Facilities* of the Project Agreement*);*
"University"	means the University Court of the University of Edinburgh and any successor or permitted assignee acquiring an interest in the University Site and/or the University Facilities of the Project Agreement;
"University Facilities"	means the existing university buildings and other facilities together with all supporting infrastructure and amenities located on the University Site as each university buildings, facilities, infrastructure and amenities may be modified from time to time;
"University Party"	means any of the University's agents, contractors and sub-contractors of any tier, its tenants and its or their directors, officers, employees, consultants, researchers, students, staff, workmen, licensees, permitted occupiers, tenants, users, visitors, sub-contractors (of any tier), any patients (whether of the University or of the University's tenants), and any other person

	for whom the University is responsible for;
"University Site"	means the two areas of land shaded peach and outlined in blue on Plan 7;
"Unreasonable Act"	means any act or omission which is contrary to any reasonable instruction, guidance or rules for the operation or management of the Facilities;
"VAT"	means value added tax at the rate prevailing at the time of the relevant supply charged in accordance with the provisions of the Value Added Tax Act 1994;
"VAT Sum"	has the meaning given in Clause 35 (*VAT and Construction Industry Tax Deduction Scheme*);
"Works"	means the design (including the preparation of all Design Data), construction, testing, commissioning and completion of the Facilities and the Retained Estate Handback Infrastructure (including any temporary works), and the installation, testing, commissioning and completion of Equipment to be performed by the Contractor in accordance with this Agreement (as varied, amended or supplemented from time to time in accordance with this Agreement);
"Yellow Area"	means the area shaded Yellow on Plan 2.

SECTION 2

INTERPRETATION

This Agreement shall be interpreted according to the following provisions, unless the context requires a different meaning:

1. The headings and marginal notes and references to them in this Agreement shall be deemed not to be part of this Agreement and shall not be taken into consideration in the interpretation of this Agreement.

2. Except where the context expressly requires otherwise, references to Clauses, Sub-clauses, paragraphs, sub-paragraphs and parts of the Schedule are references to Clauses, Sub-clauses, paragraphs, sub-paragraphs and parts of the Schedule to this Agreement and references to Sections, Appendices and Attachments (if any) are references to Sections, Appendices and Attachments to or contained in this Agreement.

3. The Schedule and Attachments (if any) to this Agreement are integral parts of this Agreement and a reference to this Agreement includes a reference to the Schedule and the Attachments (if any).

4. Words importing persons shall, where the context so requires or admits, include individuals, firms, partnerships, trusts, corporations, governments, governmental bodies, authorities, agencies, unincorporated bodies of persons or associations and any organisations having legal capacity.

5. Where the context so requires words importing the singular only also include the plural and vice versa and words importing the masculine shall be construed as including the feminine or the neuter or vice versa.

6. The language of this Agreement is English. All correspondence, notices, drawings, Design Data, test reports, certificates, specifications and information shall be in English. All operating and maintenance instructions, name plates, identification labels, instructions and notices to the public and staff and all other written, printed or electronically readable matter required in accordance with, or for purposes envisaged by, this Agreement shall be in English.

7. Save where stated to the contrary, references to any agreement or document include (subject to all relevant approvals and any other provisions of this Agreement concerning amendments to agreements or documents) a reference to that agreement or document as amended, supplemented, substituted, novated or assigned.

8. References to any Law are to be construed as references to that Law as from time to time amended or to any Law from time to time replacing, extending, consolidating or amending the same provided that the provisions of this paragraph shall be without prejudice to the operation of Clause 32 (*Changes in Law*) and Schedule Part 16 (*Change Protocol*) which shall operate in relation to a Change in Law on the basis set out in this Agreement.

9. Without prejudice to Clause 57.1, references to a public organisation (other than the Board) shall be deemed to include a reference to any successor to such public organisation or any organisation or entity which has taken over either or both the relevant functions and relevant responsibilities of such public organisation.

10. Without prejudice to Clause 57.1, references to other persons (other than the Contractor and Project Co) shall include their successors and assignees.

11. References to a deliberate act or omission of the Board or any Board Party shall be construed having regard to the interactive nature of the activities of the Board and of Project Co and the expression shall exclude acts or omissions which were within the contemplation of the parties or which were otherwise provided for in this Agreement.

12. The words in this Agreement shall bear their natural meaning. The parties have had the opportunity to take legal advice on this Agreement and no term shall, therefore, be construed contra proferentem.

13. Reference to "parties" means the parties to this Agreement and references to "a party" mean one of the parties to this Agreement.

14. In construing this Agreement, the rule known as the ejusdem generis rule shall not apply nor shall any similar rule or approach to the construction of this Agreement and accordingly general words introduced or followed by the word "other" or "including" or "in particular" shall not be given a restrictive meaning because they are followed or preceded (as the case may be) by particular examples intended to fall within the meaning of the general words.

15. All of Project Co's obligations, duties and responsibilities shall be construed as separate obligations, duties and responsibilities owed to the Board and to be performed at Project Co's own cost and expense.

16. Unless expressly stated otherwise, references to amounts or sums expressed to be "**(index linked)**" are references to amounts or sums expressed in prices relevant at the date of this Agreement (the "**Base Date**") which require to be adjusted whenever the provision containing the amount or sum is given effect in accordance with this Agreement to reflect the effects of inflation after that date. The adjustment shall be measured by changes in the relevant index published for that Contract Year as calculated in accordance with the following formula:

    16.1 Amount or sum in Base Date prices x RPId/RPIo

    16.2 Where RPI_d is the value of the Retail Prices Index published or determined with respect to the month of February most recently preceding the date when the provision in question is to be given effect and RPI_0 is the value of the Retail Prices Index at the Base Date

$$\frac{RPI_d}{RPI_0}$$

17. Reference to a document being in the Agreed Form is a reference to the form of the relevant document (or where appropriate, the form of relevant documentation on disc) agreed between the parties and for the purpose of identification initialled by each of them or on their behalf.

18. [NOT USED]

19. Words in parenthesis and italics appearing after a Clause reference or a reference to a Schedule Part are inserted for ease of reference only. If there is any discrepancy between the Clause reference and the words appearing in parenthesis and italics after the Clause reference, the Clause reference shall prevail.

20. Where this Agreement states that an obligation shall be performed "no later than" or "within" or "by" a prescribed number of Business Days after a stipulated date or event, or "no later than" or "by" a stipulated date or event which is a prescribed number of Business Days after a stipulated date or event, the latest time for performance shall be 5pm on the last Business Day for performance of the obligations concerned.

21. Where this Agreement states that an obligation shall be performed "no later than" or "within" or "by" a prescribed number of Business Days before a stipulated date or event, or "no later than" or "by" a stipulated date or event which is a prescribed number of Business Days before a stipulated date or event, the latest time for performance shall be 5pm on the last Business Day for performance of the obligations concerned.

SCHEDULE PART 2

COMPLETION DOCUMENTS

SECTION 1

DOCUMENTS TO BE DELIVERED BY THE CONTRACTOR

1. The Parent Company Guarantee, executed by the Guarantor.

2. The Contingent Funding Agreement, executed by the Guarantor.

3. Funders' Direct Agreement with the Contractor, executed by the Contractor and the Guarantor.

4. The Interface Agreement, executed by the Contractor.

5. The Board Collateral Warranty, executed by the Contractor.

6. The Performance Bond, executed by the parties to such agreements.

7. The Design Team Collateral Agreements in favour of the Board, Project Co and the Security Trustee from each of the Design Team in the Agreed Formas provided for in Clause 57.8.2.

8. In the case of the works packages set out in limbs (a), (h) and (i) of the definition of 'Key Sub-Contractor' the Key Sub-Contractor Collateral Agreement in favour of the Board, Project Co and the Security Trustee in the Agreed Formas provided for in Clause 57.8.2.

9. The Design Team Appointment executed by the parties to such agreements for the relevant appointment between the Contractor and each member of the Design Team and/or the Key Sub-Contractor Appointment for the Key Sub-contractor in limbs (a), (h) and (i) of the definition Key Sub-Contractor, and evidence that the professional indemnity insurance (or product of liability insurance, in the case of the work package referred to in limb (g), of the definition Key Sub-Contractor), to be maintained by the Design Team member or the Key Sub-Contractor in terms of the relevant Design Team Appointment / Key Sub-Contractor Appointment and Design Team Collateral Agreement / Key Sub-Contractor Collateral Agreement as applicable is in force.

SECTION 2

DOCUMENTS TO BE DELIVERED BY PROJECT CO

1. A copy of the Project Agreement and Schedule Part 1 (*Definitions and Interpretation*)– Schedule Part 32 (*Community Benefits*) thereto signed by the parties thereto.

2. A copy of the Services Contract and Schedule Part 1 (*Definitions and Interpretation*) – Schedule Part 33 (*Liquidated Damages*) thereto signed by the parties thereto.

SECTION 3

ADDITIONAL DOCUMENTS REQUIRED TO BE SIGNED AT OR BEFORE SIGNATURE OF THIS AGREEMENT

1. The Independent Tester Contract, validly signed by all parties thereto.

2. The Letters of Reliance signed by Raeburn Drilling & Geotechnical Ltd dated 15 December 2014 in relation to: (1) Contract Number 23044 and (2) Contract Number 23455.

SCHEDULE PART 3

CONTRACTOR'S KEY WORKS PERSONNEL

Position	Name
Project Director (Construction)	Alasdair Fernie
Design Lead (Construction)	Liane Edwards-Scott
Construction DIrector	Fergus Shaw
Lead M&E Engineer (Construction)	Stewart McKechnie
Lead Architect (Architect)	Lorraine Robertson
Civil and Structural Lead (Construction)	Barry McCormack

SCHEDULE PART 4

FUNDERS' DIRECT AGREEMENT

BROOKFIELD MULTIPLEX CONSTRUCTION EUROPE LIMITED
(as Construction Contractor)

- and -

BROOKFIELD MULTIPLEX PTY LIMITED
(as Guarantor)

- and -

IHS LOTHIAN LIMITED
(as Project Co)

- and -

PRUDENTIAL TRUSTEE COMPANY LIMITED
(as Security Trustee)

- and -

M&G INVESTMENT MANAGEMENT LIMITED
(as Intercreditor Agent)

CONSTRUCTION CONTRACTOR DIRECT AGREEMENT

- in relation to –

THE ROYAL HOSPITAL FOR SICK CHILDREN, CHILDREN AND ADOLESCENT MENTAL HEALTH SERVICE AND THE DEPARTMENT OF CLINICAL NEUROSCIENCES

CONTENTS

CLAUSE		PAGE
1.	DEFINITIONS AND CONSTRUCTION	1
2.	ACKNOWLEDGEMENT AND CONSENT	4
3.	PAYMENT OF MONIES	5
4.	RIGHTS OF TERMINATION BY PROJECT CO	6
5.	CONSTRUCTION CONTRACTOR TERMINATION	6
6.	RECEIVERSHIP	10
7.	NOVATION	11
8.	NUMBER OF STEP-IN ENTITIES/NOVATEES/WITHDRAWAL OF NOTICES	12
9.	SET-OFF	12
10.	DISPUTES	12
11.	ASSIGNATION	12
12.	CONFIDENTIALITY	13
13.	NOTICES	13
14.	THE CONSTRUCTION CONTRACTOR'S REPRESENTATIONS AND WARRANTIES	15
15.	GUARANTOR'S WARRANTIES AND CONTINUING OBLIGATIONS	16
16.	RECOVERY BY THE CONSTRUCTION CONTRACTOR OR THE GUARANTOR	17
17.	INSURANCE PROCEEDS	18
18.	EXPIRY	18
19.	SECURED CREDITORS' LIABILITIES	18
20.	WAIVER	18
21.	SEVERABILITY	18
22.	AMENDMENTS	18
23.	CONTINGENT FUNDING AGREEMENT	18
24.	GOVERNING LAW AND JURISDICTION	19
THE SCHEDULE		22
Form of Novation Agreement		22

THIS AGREEMENT

BETWEEN:

(1) **Brookfield Multiplex Construction Europe Limited** (registered number 03808946) whose registered office is at 99 Bishopsgate, Second Floor, London, EC2M 3XD (the "**Construction Contractor**");

(2) **Brookfield Multiplex Pty Limited** (registered number ACN 147 631 472) whose registered office is at Level 22, 135 King Street, Sydney, Australia (the "**Guarantor**");

(3) **IHS Lothian Limited** (registered number SC493676) whose registered office is at 50 Lothian Road, Edinburgh, Scotland, EH3 9WJ ("**Project Co**");

(4) **Prudential Trustee Company Limited** (registered number 01863305) whose registered office is at Laurence Pountney Hill, London, EC4R 0HH as agent and trustee for and on behalf of the Secured Creditors (the "**Security Trustee**"); and

(5) **M&G Investment Management Limited** (registered number 00936683) whose registered office is at Laurence Pountney Hill, London, EC4R 0HH as agent for and on behalf of the Senior Lenders (the "**Intercreditor Agent**").

CONSIDERING THAT:

(A) Project Co and the Lothian Health Board, supported by the Scottish Futures Trust and the Scottish Ministers (the "**Board**") have entered into an agreement (the "**Project Agreement**") on or about the date of this Agreement in relation to the financing, design, construction, testing, commissioning and completion of the Works and provision of services in connection with the Royal Hospital for Sick Children, Children and Adolescent Mental Health Service and the Department of Clinical Neurosciences (the "**Project**").

(B) Project Co, HoldCo and TopCo (as defined below) have entered into a common terms agreement on or about the date of this Agreement with, amongst others, the Security Trustee, the Senior Lenders (the "**Common Terms Agreement**") pursuant to which the Institutional Investor Senior Lenders and EIB (as Senior Lenders) have agreed to provide the Borrower with senior loan facilities pursuant to the Institutional Investor Senior Facility Agreement and the EIB Senior Finance Contract, respectively, subject to the terms and conditions set out in the Common Terms Agreement and each Loan Agreement (as such terms are defined therein).

(C) Project Co and the Construction Contractor have entered into an agreement (the "**Construction Contract**") on or about the date of this Agreement in relation to the provision of construction services relating to the Project.

(D) The Guarantor has entered into the Contractor Guarantee (as defined below) in favour of Project Co guaranteeing the obligations of the Construction Contractor under the Construction Contract.

(E) This is the "**Construction Contractor Direct Agreement**" referred to in the Common Terms Agreement. It is a condition precedent of the Institutional Investor Senior Facility Agreement and the EIB Senior Finance Contract that the Construction Contractor and the Guarantor enter into this Agreement.

IT IS AGREED AS FOLLOWS:

1. DEFINITIONS AND CONSTRUCTION

1.1 Save where expressly stated or the context otherwise requires:

(a) the headings and sub-headings are for ease of reference only;

(b) the interpretation rule known as ejusdem generis shall not apply, nor shall any similar rule or approach to interpretation and accordingly where a general statement is followed by the word "including" or "in particular" or where in some other way specific examples are given of matters included in a general statement, the word "including" or "in particular" or the specific examples shall not limit the scope of the ordinary meaning of the general statement;

(c) all references to agreements, documents or other instruments include (subject to all relevant approvals) a reference to that agreement, document or instrument as amended, supplemented, substituted, novated or assigned from time to time;

(d) all references to any statute or statutory provision shall include references to any statute or statutory provision which amends, extends, consolidates or replaces the same and shall include any orders, regulations, codes of practice, instruments or other subordinate legislation made under the relevant statute or statutory provision;

(e) a reference to "days" is a reference to "calendar days"; and

(f) where the last day for performance of an obligation under this Agreement falls on a day which is not a Business Day, the latest time for performance shall be extended to noon on the next following Business Day.

1.2 In this Agreement:

"**Advance**" has the meaning given to it in the Contingent Funding Agreement;

"**Board**" has the meaning given in Recital A;

"**Business Day**" means a day (other than a Saturday or Sunday) on which banks and EIB are open for general business in London, Luxembourg and Edinburgh;

"**Common Terms Agreement**" has the meaning given in Recital B;

"**Compensation Amount**" has the meaning given in Clause 5.8 (*Construction Contractor Termination Notice*);

"**Construction Contract**" has the meaning given in Recital C;

"**Contingent Funding Agreement**" means the contingent funding agreement entered into on or about the date of this Agreement made between Project Co and the Guarantor;

"**Contractor Guarantee**" means any guarantee of the obligations of the Construction Contractor under the Construction Contract provided by a Guarantor under and in accordance with the Construction Contract;

"**Contractor's Collateral Agreement**" has the meaning given to such term in the Project Agreement;

"**Construction Contractor Termination Notice**" has the meaning given in Clause 5.1;

"**Discharge Date**" means has the meaning give to it in the Intercreditor Agreement;

"**Documents**" means the Construction Contract, this Agreement and any other document in relation to the Project entered into or which will be entered into by the Construction Contractor;

"**Due Amount**" has the meaning given in Clause 5.8 (*Construction Contractor Termination Notice*);

"**Expiry Date**" has the meaning given in Clause 5.3 (*Suspension Period*);

"**Finance Documents**" has the meaning given to such term in the Common Terms Agreement;

"**Finance Parties**" has the meaning given to such term in the Common Terms Agreement;

"**Funders' Direct Agreement**" means the agreement entered into on or about the date of this Agreement made between the Board, Project Co, the Security Trustee and others;

"**Future Due Amount**" has the meaning given in Clause 5.8 (*Construction Contractor Termination Notice*);

"**HoldCo**" means IHS Lothian Holdings Limited, (registered number 9360660) whose registered office is at 28 Ropemaker Place, London, United Kingdom, EC2Y 9HD;

"**Intercreditor Agreement**" has the meaning given to such term in the Common Terms Agreement;

"**Novatee**" means:

(i) a person that is proposed as and becomes a party to the Project Agreement in place of Project Co by way of delegation; or

(ii) any other person subject to the Construction Contractor's consent, such consent not to be withheld other than where it is not reasonably likely that the person will have sufficient resources available to it in order to be able to meet its obligations under the Construction Contract as and when they fall due and such consent shall be deemed to be given, in the absence of a response from the Construction Contractor, within 10 Business Days after service of the Novation Notice on the Construction Contractor;

"**Novation Date**" has the meaning given in Clause 7.1;

"**Novation Liability Amount**" has the meaning given in Clause 7.2;

"**Novation Notice**" has the meaning given in Clause 7.1;

"**Party**" means a party to this Agreement;

"**Proceeds Account**" has the meaning given to such term in the Common Terms Agreement;

"**Project**" has the meaning given in Recital A;

"**Project Agreement**" has the meaning given in Recital A;

"**Project Documents**" has the meaning given to such term in the Common Terms Agreement;

"**Proposed Construction Contractor Termination Date**" has the meaning given in Clause 5.8 (*Construction Contractor Termination Notice*);

"**Receiver**" means any receiver, manager or administrative receiver or administrator;

"**Relevant Party**" means the Construction Contractor and the Guarantor;

"**Secured Creditors**" has the meaning given to such term in the Common Terms Agreement;

"**Security Documents**" has the meaning given to such term in the Common Terms Agreement;

"**Security Interest**" means a mortgage, trust, charge, pledge, lien, assignation by way of security or other security interest securing any obligation of any person or any other agreement or arrangement having a similar effect;

"**Senior Lenders**" has the meaning given to such term in the Common Terms Agreement;

"**Step-In Date**" has the meaning given in Clause 5.7 (*Right to step-in*);

"**Step-In Entity**" has the meaning given in Clause 5.7 (*Right to step-in*);

"**Step-In Liability Amount**" has the meaning given in Clause 5.9;

"**Step-In Notice**" has the meaning given in Clause 5.7 (*Right to step-in*);

"**Step-Out Date**" has the meaning given in Clause 5.14 (*Step-Out*);

"**Suspension Period**" has the meaning given in Clause 5.3;

"**Termination Action**" has the meaning given in Clause 5.1;

"**Termination Notice**" means a notice given by the Board to the Intercreditor Agent under clause 3.2 of the Funders' Direct Agreement;

"**TopCo**" means IHS Lothian Investments Limited (registered number 9359641) whose registered address is at 28 Ropemaker Place, London, United Kingdom, EC2Y 9HD;

"**Works**" has the meaning given to such term in the Construction Contract.

2. ACKNOWLEDGEMENT AND CONSENT

2.1 Notice of Security Interests

Project Co hereby gives intimation to the Relevant Parties of the Security Interests granted by Project Co to the Security Trustee under the Security Documents over all of the right, title, benefit and interest of Project Co in and to, inter alia, the Construction Contract and the Contractor Guarantee.

2.2 Consent to Security Interests

Each Relevant Party hereby acknowledges for the benefit of the Security Trustee and the Secured Creditors that it has received intimation of and consents to the granting of the Security Interests referred to in Clause 2.1 (*Notice of Security Interests*).

2.3 No Other Notice

Each Relevant Party confirms to the Security Trustee for the benefit of the Security Trustee and the Secured Creditors that, except for the notice contained in Clause 2.1 (*Notice of Security Interests*), it has not received intimation of or consented to any other Security Interest granted by Project Co over any right, title, benefit or interest in or to the Construction Contract or the Contractor Guarantee and has not received notice that any third party has or will have

any right or interest whatsoever in, or has made or will be making any claim or demand or has taken or will be taking any action whatsoever in respect of, the Construction Contract or the Contractor Guarantee.

2.4 **No Alteration or Assignation of Construction Contract**

Notwithstanding anything to the contrary in the Construction Contract, the Construction Contractor shall not be entitled to assign or transfer or otherwise dispose of any of its rights or obligations under the Construction Contract or any part thereof without the prior written consent of the Security Trustee. The Construction Contractor acknowledges that Project Co may not make or agree to any amendment, modification or waiver of any provision of the Construction Contract or any part thereof without the prior written consent of the Security Trustee.

2.5 **Obligations under Construction Contract and Contractor Guarantee**

The Construction Contractor and the Guarantor hereby agree that the Secured Creditors, any Receiver and any delegate appointed by any of the same shall have no liability or obligation under the Construction Contract or the Contractor Guarantee whatsoever, including by virtue of the granting of the Security Interests referred to in Clause 2.1 (*Notice of Security Interests*) or otherwise, save to the extent expressly provided for in this Agreement.

2.6 **Project Co's Discretions**

The Security Trustee has agreed with Project Co that, and the Construction Contractor and the Guarantor acknowledge that, Project Co is obliged to exercise certain of its discretions in compliance with the instructions of the Secured Creditors.

2.7 **Co-operation and Supply of Information**

(a) The Construction Contractor and the Guarantor each agree to promptly supply to Project Co:

(i) any information in its possession, power or control which Project Co is required to provide to the Intercreditor Agent or Security Trustee under the Finance Documents; and

(ii) any other information reasonably required in connection with this Agreement, the Construction Contract or the subject matter thereof,

and to provide a copy of such information directly to the Intercreditor Agent or Security Trustee promptly on receipt of a request from the Intercreditor Agent or Security Trustee specifying the information required.

(b) The Construction Contractor warrants that it will deliver to the Security Trustee a notice within fourteeen days of becoming aware of the same detailing (so far as the relevant facts are known to the Construction Contractor at the time) any material breach by Project Co of the Construction Contract.

(c) The Construction Contractor shall, insofar as it is lawfully able so to do, grant the Security Trustee and any other person reasonably requested by the Security Trustee access to any site relevant to the subject matter of the Construction Contract.

(d) The Parties agree to enter into such further agreements as are necessary to give effect to the intent of this Agreement.

3. PAYMENT OF MONIES

The Construction Contractor and the Guarantor agree with the Intercreditor Agent and the Security Trustee that each will pay all monies due to Project Co under the Construction

Contract and the Contractor Guarantee (as applicable) to the Proceeds Account unless and until the Intercreditor Agent or the Security Trustee otherwise directs, whereupon each of the Construction Contractor and the Guarantor shall comply with the directions of the Intercreditor Agent or the Security Trustee and the Parties agree that such payment shall constitute full discharge of the relevant payment obligation. Project Co agrees and consents to this arrangement.

4. RIGHTS OF TERMINATION BY PROJECT CO

The Construction Contractor and Project Co agree with the Security Trustee that any notice issued by Project Co to terminate, cancel or rescind the Construction Contract or the employment of the Construction Contractor thereunder shall be of no effect unless the notice is accompanied by written confirmation from the Security Trustee that it approves the giving of such notice.

5. CONSTRUCTION CONTRACTOR TERMINATION

5.1 The Construction Contractor shall not other than in accordance with Clause 5.13 (*Step-In Period*):

(a) take any steps to terminate, rescind, or cancel the Construction Contract or its employment thereunder or, subject to Clause 5.4, suspend performance thereof; or

(b) take any steps to present a petition for the administration or winding up of, or enforce execution against any assets of, Project Co,

("**Termination Action**") until it has given the Security Trustee notice (a "**Construction Contractor Termination Notice**") and the Expiry Date has occurred.

5.2 Following service of a Construction Contractor Termination Notice and the occurrence of the Expiry Date, if a Novation Date or Step-In Date has not occurred and the matter to which the Construction Contractor Termination Notice relates has not been remedied, any grace or remedy period required under the Construction Contract shall not apply in respect of such matter and the Construction Contractor shall be entitled to exercise any rights to take Termination Action arising under the Construction Contract in respect of such matter with immediate effect.

5.3 Suspension Period

Suspension Period means a period commencing on any of:

(a) the service of a Construction Contractor Termination Notice;

(b) any acceleration of amounts due and owing under any Finance Document;

(c) the occurrence of an event of default under the Common Terms Agreement or the Project Agreement;

(d) the Security Trustee having received valid and binding instructions to enforce any of the Security Documents or giving notice to the Secured Creditors of its intention to enforce any of the Security Documents; or

(e) the date of service of a Termination Notice by the Board under the Funders' Direct Agreement,

and continuing until the expiry of a period of 90 Business Days following the date on which, in the case of sub-clause 5.3(a) the Construction Contractor Termination Notice is served and in the case of sub-clauses 5.3(b)-(e) a Construction Contractor Termination Notice is

subsequently served, provided that such period shall be extended as necessary in all the circumstances, so as to:

(a) satisfy all the time limits provided for in this Agreement prior to the period expiring;

(b) enable the procedures referred to in Clause 5 (*Construction Contractor Termination*) to be completed prior to the period expiring;

(c) enable any dispute to be determined prior to the period expiring; and

(d) ensure that the period does not expire before the completion of any procedures under the Funders' Direct Agreement for the replacement of Project Co which have been commenced or contemplated,

(the **"Expiry Date"**).

5.4 **Contractor Suspension for non-payment and Security Trustee's Right to Remedy Breach by Payment**

Where the Construction Contractor is entitled to suspend performance of the Works for non-payment pursuant to Section 112 of the Housing Grants Construction and Regeneration Act 1996, it will be entitled to suspend performance on giving the Security Trustee at least 10 Business Days' notice stating:

(a) its intention to suspend performance in accordance with this Clause; and

(b) the grounds for suspension in reasonable detail (a **"Suspension Event Notice"**).

Following the expiry of such period the Contractor shall be entitled to take such action to the extent that the events or circumstances giving rise to the Contractor's right to suspend performance continue to subsist.

If any failure by Project Co to pay any amounts due and owing under the Construction Contract to the Construction Contractor is remedied by payment in full by the Security Trustee (or any other party), prior to the expiry of the notice period referred to in this Clause, then the Construction Contractor's right to suspend shall be treated as if no right had arisen in respect of such failure provided always that the Construction Contractor will still be entitled to any right to claim interest on late payment.

The Contractor shall be required to continue to maintain and care for any existing Works during any period where it has suspended the performance of the Works.

5.5 **Construction Contractor's Works during Suspension Period**

Subject to Clause 5.4 (*Contractor Suspension for non-payment and Security Trustee's Right to Remedy Breach by Payment*) and Clause 5.6 (*Security Trustee's Right to Order Suspension*), each Relevant Party warrants to the Security Trustee that during the Suspension Period it shall continue to perform its obligations under the Documents (including, in the case of the Construction Contractor, proceeding with the due and punctual performance of the Works) and any rights that a Relevant Party has to suspend performance of its obligations under a Document (including, in the case of the Construction Contractor, suspension of performance of the Works) shall be of no effect during the Suspension Period.

5.6 **Security Trustee's Right to Order Suspension**

Following the issue of a Construction Contractor Termination Notice, the Security Trustee may request that the Construction Contractor suspends the performance of all or part of its obligations under the Construction Contract and the Construction Contractor shall, upon receipt, comply with that request.

5.7 **Right to step-in**

The Security Trustee may, at any time during a Suspension Period, give notice (a "**Step-In Notice**") to the Construction Contractor that a person is to assume, jointly and severally with Project Co, all of Project Co's rights under the Construction Contract (a "**Step-In Entity**") as from the date (the "**Step-In Date**") specified in the Step-In Notice and falling prior to the Expiry Date.

5.8 **Construction Contractor Termination Notice**

A Construction Contractor Termination Notice must specify:

(a) the proposed calendar date on which (subject to Clauses 5.1 and 5.3 (*Suspension Period*), including any extension to the date thereunder) the Termination Action will be taken (the "**Proposed Construction Contractor Termination Date**");

(b) the Termination Action which the Construction Contractor proposes to take;

(c) in reasonable detail the grounds for the alleged breach or default by Project Co which the Construction Contractor alleges entitles it to take the Termination Action;

(d) full particulars of any sums which are due and payable to the Construction Contractor but unpaid by Project Co as at the date of the Construction Contractor Termination Notice (the "**Due Amount**");

(e) full particulars of any sums which will become due and payable [by Project Co] to the Construction Contractor in respect of the period up to the Proposed Construction Contractor Termination Date (taking account of any suspension of performance pursuant to Clause 5.6 (*Security Trustee's Right to Order Suspension*) or otherwise) and the dates on which they will become due and payable (the "**Future Due Amount**"); and

(f) full particulars of any material breaches, obligations or liabilities of Project Co, not covered by sub-clauses (d) and (e) above, relating to the period prior to the Construction Contractor Termination Notice and the amount required to compensate the Construction Contractor in full and final settlement of all claims in respect thereof (the "**Compensation Amount**").

5.9 The information referred to in Clause 5.8 (*Construction Contractor Termination Notice*) shall be updated by the Construction Contractor on a fortnightly basis and on the day immediately preceding the Step-In Date, such update being limited to such changes as are required to reflect any amounts paid by Project Co and any new matters occurring since the previous Construction Contractor Termination Notice or update, or notice served by the Construction Contractor under Clause 5.10 below or update thereof, and so as to cover the period (if any) between the Proposed Construction Contractor Termination Date and the Step-In Date. The total of all amounts referred to in Clause 5.8 (*Construction Contractor Termination Notice*), so updated immediately prior to the Step-In Date, shall be the "**Step-In Liability Amount**".

5.10 If a Construction Contractor Termination Notice has not been served and the Security Trustee wishes to consider exercising its rights to serve a Step-In Notice or a Novation Notice, the Construction Contractor shall serve notice on the Security Trustee setting out the information referred to in Clauses 5.8, 5.9 (*Construction Contractor Termination Notice*) and 7.2 (to the extent applicable) within fourteen days of the Security Trustee's notice so to do.

5.11 **Step-In**

Subject to Clause 8 (*Number of Step-In Entities/Novatees/Withdrawal of Notices*), with effect from the Step-In Date, the Construction Contractor Termination Notice and any right to take Termination Action in respect of the matters to which the Construction Contractor Termination Notice relates shall expire and:

(a) the Step-In Entity shall be jointly and severally entitled to the rights of Project Co under the Construction Contract and the Contractor Guarantee both arising, and relating to matters occurring, on or after the Step-In Date;

(b) the Construction Contractor and the Guarantor shall only accept as valid notices, instructions, orders and demands given or made by the Step-In Entity;

(c) in respect of the period prior to the Step-In Date, the Step-In Entity shall be jointly and severally liable with Project Co only for, and such liability shall be limited to:

(i) paying the Step-In Liability Amount; or

(ii) paying the Step-In Liability Amount less the Compensation Amount, and remedying the breaches to which the Compensation Amount relates within a reasonable period of time,

and the amounts referred to in sub-clauses (i) or (ii) above shall be paid within 15 Business Days of the Step-In Date or on such later date as they become due in accordance with the Construction Contract; and

(d) in respect of the period following the Step-In Date, the Step-In Entity will pay the Construction Contractor any sum which becomes due and payable by Project Co to the Construction Contractor pursuant to the terms of the Construction Contract during the Step-In Period which is not paid by Project Co.

5.12 **No liability**

The Step-In Entity shall have no liability to the Construction Contractor of whatsoever nature, with the exception of the liability to discharge the obligations referred to at Clause 5.11(c) and Clause 5.11(d).

5.13 **Step-In Period**

(a) Subject to paragraph (b) below, if a Step-In Notice has been issued the Construction Contractor shall not terminate the Construction Contract prior to the Step-Out Date on grounds:

(i) that the Step-In Entity has taken any action referred to in Clause 5.3(b) or Clause 5.7 (*Right to step-in*) or that the Security Trustee has enforced any Security Document(s); or

(ii) arising prior to the Step-In Date of which the Construction Contractor is aware (having made proper enquiry and whether or not continuing at the Step-In Date); or

(iii) arising solely in relation to Project Co.

(b) If a Step-in Notice has been issued, the Construction Contractor shall only be entitled to terminate the Construction Contract prior to the Step-Out Date by written notice to Project Co and the Step-In Entity:

(i) with immediate effect if any amount referred to in Clause 5.11(c) has not been paid to the Construction Contractor in accordance with that Clause;

(ii) on grounds arising after the Step-In Date in accordance with the terms of the Construction Contract.

5.14 **Step-Out**

The "**Step-Out Date**" shall be the earliest date on which any of the following occurs:

(a) the Security Trustee gives notice to that effect to the Construction Contractor;

(b) termination or expiry of the Construction Contract other than in breach of this Agreement; or

(c) the Novation Date.

5.15 On and from the Step-Out Date, the Step-In Entity shall be released from any and all obligations, liabilities and duties under the Construction Contract and this Agreement except for obligations, liabilities and duties under Clause 5.11(c) and Clause 5.11(d) which remain unperformed.

5.16 **Obligations still owed to Project Co**

The Construction Contractor and the Guarantor acknowledge and agree that notwithstanding the provisions of the Contractor's Collateral Agreement and/or the Transfer Provisions, the Construction Contractor and Guarantor shall remain responsible, and be liable to, Project Co in respect of all costs, claims, damages, losses and liabilities which arise out of or in connection with the Construction Contract prior to and/or at the date of termination of the Project Agreement to Project Co and such liability shall be deemed to include:

(a) all payments that would have fallen due to Project Co under clause 46 (Compensation on Termination) of the Construction Contract; and

(b) the discharge of all of the Construction Contractor's obligations under the Construction Contract that would have fallen due on or consequent to termination,

in each case had the Contractor's Collateral Agreement and/or the Transfer Provisions of the Project Agreement not applied and termination of the Construction Contract had occurred. For the avoidance of doubt, Project Co shall continue to have the benefit of this Clause 5.16 notwithstanding the repayment of all sums due and owing to the Secured Creditors under the Finance Documents. In this Clause 5.16, the "**Transfer Provisions**" means clause 47 (Consequences of Termination) of the Project Agreement.

6. RECEIVERSHIP

6.1 Nothing in this Agreement shall prejudice the rights of the Security Trustee and the Secured Creditors to appoint or petition for or consent to the appointment of a Receiver.

6.2 If the Security Trustee so elects, Project Co (to whom a Receiver has been appointed) shall constitute the Step-In Entity and shall be entitled to all the rights and benefits (including any applicable limitation of liability) and subject to all the obligations of the Step-In Entity, provided that such rights, benefits and obligations shall only endure for the period during which a Receiver (including any replacement Receiver) is appointed to Project Co and on and from the Step-Out Date (which shall be deemed to occur automatically on the date on which Project Co ceases to be subject to a Receiver's appointment, or otherwise in accordance with Clause 5.14 (*Step-Out*)), Project Co's rights, benefits and obligations shall be governed by Clause 5 (*Construction Contractor Termination*) in respect of the period prior to the Step-Out Date and by the Construction Contract in respect of the period on and after the Step-Out Date.

7. NOVATION

7.1 At any time:

(a) when the Security Trustee may serve a Step-In Notice; or

(b) during the period from (and including) the Step-In Date to (and including) any Step-Out Date,

the Security Trustee may give notice to the Construction Contractor (a "**Novation Notice**") and Project Co naming a Novatee and specifying a date (the "**Novation Date**") on which a novation by way of delegation is to take effect and falling within the periods referred to at paragraphs (a) and (b) above.

7.2 Where a Novation Notice is served, the Construction Contractor shall on a fortnightly basis following service of the Novation Notice and on the day immediately preceding the Novation Date update the information referred to in Clauses 5.8 and 5.9 (*Construction Contractor Termination Notice*), such update being limited to such changes as are required to reflect any amounts paid by Project Co or a Step-In Entity and any new matters occurring since the previous Construction Contractor Termination Notice or update, or notice by the Construction Contractor under Clause 5.10 (*Step-In*) or update thereof, and so as to cover the period up to the Novation Date. The total of all amounts referred to in Clauses 5.8 and 5.9 (*Construction Contractor Termination Notice*), so updated immediately prior to the Novation Date shall be the "**Novation Liability Amount**".

7.3 On the Novation Date:

(a) Project Co, the Novatee, the Construction Contractor and the Guarantor shall execute a novation agreement in substantially the form of the Schedule hereto provided that, if the Security Trustee so elects, Project Co shall not be required to be a party to the novation agreement but on execution of an agreement by the Novatee, the Construction Contractor and Guarantor in substantially the form of the Schedule hereto, modified as appropriate, Project Co shall be deemed to be released from all its liabilities under the existing Construction Contract;

(b) if so requested, the Construction Contractor, the Guarantor and the Novatee shall execute a direct agreement with the financiers of the Novatee substantially in the form, mutatis mutandis, of this Agreement;

(c) the Novatee's liability in respect of the period prior to the Novation Date shall be limited to:

(i) paying the Novation Liability Amount; or

(ii) paying the Novation Liability Amount less the Compensation Amount and remedying the breaches to which the Compensation Amount relates within a reasonable period of time,

the amounts referred to in sub-clauses (i) and (ii) above shall be paid within 15 Business Days of the Novation Date or such later date as they become due in accordance with the Construction Contract and the novation agreement.

7.4 If the Construction Contractor does not notify the Intercreditor Agent within five Business Days of receipt of notice of a proposed Novatee that it objects to such proposed Novatee and set out the grounds for such objection, the Construction Contractor shall not be entitled to object to such proposed Novatee. Notwithstanding paragraph (ii) of the definition of "**Novatee**", the Construction Contractor may not make any objection to a proposed Novatee if that entity has been accepted by the Board as an Appointed Representative or Suitable Substitute Contractor (or such equivalent position) pursuant to the terms of (and as defined under) the Funders' Direct Agreement.

8. NUMBER OF STEP-IN ENTITIES/NOVATEES/WITHDRAWAL OF NOTICES

The Security Trustee may give any number of Step-In Notices or Novation Notices and may withdraw any such notice at any time.

9. SET-OFF

Each of the Construction Contractor and the Guarantor agrees with the Security Trustee that it will not exercise any right of set-off or counterclaim it may have against Project Co so as to diminish any monies payable by the Construction Contractor under the Construction Contract or this Agreement, or by the Guarantor under the Contractor Guarantee or this Agreement save only where the right of set-off or counterclaim is made pursuant to the Construction Contract or the Contractor Guarantee.

10. DISPUTES

10.1 Any dispute between any of the Parties in connection with this Agreement or any information referred to in this Agreement (including the information referred to in Clauses 5.8, 5.9, 5.10 and 7.2) shall be determined by reference to the disputes resolution procedure as provided under the Construction Contract as if the same were incorporated herein, with references to Project Co being treated as references to the Security Trustee, mutatis mutandis.

10.2 Following any decision concerning the identity of a Novatee which is adverse to the Security Trustee, the Security Trustee shall be granted a further period of 20 Business Days in which the Security Trustee may propose a further Novatee before the Construction Contractor may take any Termination Action.

11. ASSIGNATION

11.1 This Agreement shall be binding on and shall enure to the benefit of the Parties and their respective successors and permitted assigns and transferees and reference to each Party shall be construed accordingly.

11.2 Other than as set out in Clause 2 (*Acknowledgement and Consent*), none of the Construction Contractor, the Guarantor or Project Co may assign or transfer or otherwise dispose of any of their rights or obligations under this Agreement without the prior written consent of the Intercreditor Agent.

11.3 The Intercreditor Agent and the Security Trustee may assign or transfer their respective rights under this Agreement to a successor Intercreditor Agent or, as the case may be, Security Trustee appointed in accordance with the Finance Documents.

11.4 **Resignation of Intercreditor Agent or Security Trustee**

Upon notification to the Construction Contractor and the Guarantor that the Intercreditor Agent or the Security Trustee (as the case may be) has resigned:

(a) all the liabilities, obligations and rights of the Intercreditor Agent or Security Trustee shall be assumed by any replacement agent or, as the case may be, security trustee on receipt of a notice to the Construction Contractor, the Guarantor and Project Co from such replacement agent stating that it agrees to be bound by this Agreement and with effect thereof, the Intercreditor Agent or Security Trustee (as at the date of this Agreement) shall cease to have any liability, obligation or right hereunder; and

(b) if the Intercreditor Agent has resigned without replacement, it will cease to have any continuing liability, obligation or right hereunder.

12. CONFIDENTIALITY

Each Party agrees to keep confidential all documents, other information and in each case the contents thereof and shall not publish or otherwise disclose the same other than:

(a) with the other Parties' written consent;

(b) as may be required by any law, any relevant stock exchange or other competent regulatory authority or court;

(c) where the same is in the public domain other than as a result of a breach of this Agreement; or

(d) to any person participating in or considering participating in the funding of the Project, any proposed Step-In Entity or Step-In Entity or Novatee, or in each case their professional advisers or consultants.

In the case of paragraph (d), the disclosing Party shall use reasonable endeavours to obtain a similar confidentiality undertaking in its favour from the persons mentioned in that paragraph and exercise the benefit of such undertaking so as to maintain the confidentiality of such information.

13. NOTICES

13.1 Address

Except as otherwise stated, all notices or other communications required in connection with this Agreement shall be in writing and sent by hand, by first class prepaid post or by facsimile transmission to the relevant address or facsimile number set out below or to such other address or facsimile number as a Party may notify to the others in writing by not less than five Business Days' prior notice.

The Guarantor 99 Bishopsgate, Second Floor, London EC2M 3XD [redacted] Attention: Ashley Muldoon (Director)	**The Construction Contractor** 99 Bishopsgate, Second Floor, London EC2M 3XD [redacted] Attention: The Managing Director
Security Trustee Laurence Pountney Hill London EC4R 0HH [redacted] Attention: Corporate Trust Manager	**Project Co** 50 Lothian Road, Festival Square, Edinburgh EH3 9WJ Attention: Wallace Weir
Intercreditor Agent	

Laurence Pountney Hill London EC4R 0HH [redacted] Attention: Administration Manager	

13.2 **Effective receipt**

(a) Any notice, communication or document made or delivered by one Party to another under or in connection with this Agreement will only be effective:

(i) if by way of fax, when received in legible form; or

(ii) if by way of letter, when it has been left at the relevant address for five Business Days after being deposited in the post postage prepaid in an envelope addressed to it at that address.

(b) Any communication or document to be made or delivered to any of the Finance Parties to this Agreement will be effective only when actually received by the relevant Finance Party and then only if it is expressly marked for the attention of the department or officer specified as part of its address details provided under Clause 13.1 (*Address*) (or any substitute department or officer as the Finance Party shall specify for this purpose).

13.3 **Electronic communication**

(a) Any communication to be made between any two Parties under or in connection with this Agreement may be made by electronic mail or other electronic means (including, without limitation, by way of posting to a secure website) if those two Parties:

(i) notify each other in writing of their electronic mail address and/or any other information required to enable the transmission of information by that means; and

(ii) notify each other of any change to their address or any other such information supplied by them by not less than five Business Days' notice.

(b) Any such electronic communication as specified in paragraph (a) above to be made between any two Parties may only be made in that way to the extent that those two Parties agree that, unless and until notified to the contrary, this is to be an accepted form of communication.

(c) Any such electronic communication as specified in paragraph (a) above made between any two Parties will be effective only when actually received (or made available) in readable form and in the case of any electronic communication made by a Party to the Intercreditor Agent or the Security Trustee only if it is addressed in such a manner as the Intercreditor Agent or Security Trustee shall specify for this purpose.

(d) Any electronic communication which becomes effective, in accordance with paragraph (c) above, after 5:00 p.m. in the place in which the Party to whom the relevant communication is sent or made available has its address for the purpose of this Agreement shall be deemed only to become effective on the following day.

(e) Any reference in this Agreement to a communication being sent or received shall be construed to include that communication being made available in accordance with this Clause 13.3.

14. THE CONSTRUCTION CONTRACTOR'S REPRESENTATIONS AND WARRANTIES

14.1 The Construction Contractor warrants to the Security Trustee and Intercreditor Agent that it has complied with and will continue to comply with all its obligations under the Construction Contract provided that it shall have no greater liability under this Clause 14.1 than it would have if the Security Trustee, Intercreditor Agent and Project Co were named as joint employer under the Construction Contract with the Construction Contractor owing its duties separately thereunder to each employer.

14.2 The Construction Contractor further represents and warrants to and for the benefit of each of the Security Trustee and the Intercreditor Agent that:

(a) **Status**

It is a limited liability company duly incorporated and validly existing under the laws of England and it has the power and has taken all necessary action to enter into, exercise its rights under and perform and comply with its obligations contained in the Documents.

(b) **Non-Contravention**

Its entry into, exercise of its rights and/or performance of or compliance with its obligations under the Documents to which it is a party do not and will not violate or exceed any borrowing or other power or restriction granted or imposed by:

(i) any law, order or decree of any court or arbitrator to which it is subject;

(ii) its memorandum or articles of association or other constitutional documents; or

(iii) any material agreement to which it is a party or which is binding on its assets,

or result in the existence of, or oblige it to create, any encumbrance over its assets.

(c) **General**

(i) There are no outstanding material disputes or material differences between it and any person with respect to the Construction Contract.

(ii) No litigation, action, arbitration or administrative proceedings of or before any court or agency has been commenced or threatened by or against it which in any way may have a material adverse effect on its ability to perform its obligations under the Documents.

(d) **Legal, valid, binding and enforceable obligations**

The obligations expressed to be assumed by it in each Document to which it is a party are its legal, valid, binding and enforceable obligations.

(e) **No default**

It is not in breach of or in default under any agreement to an extent or a manner which has or could have a material adverse effect on its ability to perform its obligations under any Document.

15. GUARANTOR'S WARRANTIES AND CONTINUING OBLIGATIONS

15.1 Direct Guarantee

The Guarantor:

(a) unconditionally and irrevocably guarantees to the Security Trustee on behalf of the Secured Creditors as primary obligor the performance by the Construction Contractor of its obligations under this Agreement and the Guarantor shall indemnify the Finance Parties against any loss or damage suffered as a result of any breach of the Construction Contract or this Agreement by the Construction Contractor provided that it shall have no greater liability under this Clause 15.1 than it would have if the Finance Parties were named as joint beneficiary with Project Co under the Contractor Guarantee with the Guarantor owing its duties separately thereunder to each beneficiary (the obligations of the Construction Contractor referred to in this Clause being the "Guaranteed Obligations"); and

(b) shall not be discharged nor released by any time indulgence, waiver, variation, amendment or consent given under or in respect of the Construction Contract.

15.2 Continuing Obligations

The Guarantor's rights and obligations under the Contractor Guarantee and this Agreement shall continue in full force and effect and it shall remain fully responsible for the fulfilment of its liabilities and obligations under the Contractor Guarantee notwithstanding the exercise of any rights under this Agreement by the Intercreditor Agent, the Security Trustee, any Receiver, any Step-In Entity or any Novatee.

15.3 Waiver of rights and remedies

(a) For the benefit of the Construction Contractor and the Security Trustee (on behalf of the Secured Creditors), the Guarantor waives any right or remedy that it has or may have to subrogation, indemnification or payment on any other basis by the Construction Contractor and any other remedy against the Construction Contractor (each a "**Relevant Right**") by reason of or in connection with:

(i) the performance of the Guarantor's obligations under this Agreement; or

(ii) the Guaranteed Obligations,

in circumstances where the Construction Contractor promotes, enters into, or implements a voluntary arrangement (as defined in section 1(1) of the Insolvency Act 1986) or formal scheme of arrangement (under Part 26 of the Companies Act 2006) or any analogous procedure in any jurisdiction.

(b) The Guarantor and the Construction Contractor undertake to the Security Trustee (on behalf of the Secured Creditors) that they shall not enter into any arrangement purporting to entitle the Guarantor to a Relevant Right or which otherwise conflicts with Clause 15.3(a) and in the event of any breach of this undertaking:

(i) damages shall not be an adequate remedy, and the Guarantor and the Construction Contractor shall be deemed to consent to any application brought by the Security Trustee for injunctive relief to prevent any such arrangement being enforced;

(ii) the Guarantor shall (as a separate obligation) indemnify the Security Trustee (on behalf of the Secured Creditors) against the consequences of such breach; and

(iii) the Security Trustee (on behalf of the Secured Creditors) shall, under the Third Party Rights Act 1999, have a right to enforce the termination of such arrangement, without compensation to the Guarantor or the Construction Contractor, immediately on notice to the Guarantor and Construction Contractor and an express term granting such right of termination shall be deemed to be incorporated into any such arrangement immediately on such arrangement coming into effect.

15.4 **Covenants**

The Guarantor hereby covenants with the Security Trustee not to amend, modify or replace the Contractor Guarantee or to agree to any release or waiver of any term of the Contractor Guarantee without the prior written consent of the Security Trustee.

16. RECOVERY BY THE CONSTRUCTION CONTRACTOR OR THE GUARANTOR

16.1 **Undertaking**

Neither the Construction Contractor nor the Guarantor shall, prior to the Discharge Date:

(a) claim, recover, retain or receive (or seek to claim, recover, retain or receive) any amount from Project Co save any amount that Project Co is obliged to pay to the Construction Contractor under the Construction Contract; or

(b) compete with the Security Trustee's rights on a winding up, administration or other insolvency proceedings of Project Co or claim to be subrogated to any rights of the Security Trustee or any Secured Creditor;

(c) take any steps, action or commence any proceedings for the winding up, dissolution, administration, voluntary arrangement or re-organisation of Project Co or for the appointment of a receiver, administrator, administrative receive, trustee or other similar officer in respect of Project Co or any steps, action or legal proceedings analogous to the foregoing (including any moratorium); or

(d) enforce execution against any assets of Project Co without giving the Security Trustee 120 Business Days' prior written notice of the same.

16.2 **Turnover**

If, at any time prior to the Discharge Date, the Construction Contractor or the Guarantor receives:

(a) any amount in contravention of the provisions of Clause 16.1 (whether before or after an insolvency of Project Co); and/or

(b) a part of Project Co's net property available for the satisfaction of unsecured debts pursuant to section 176A of the Insolvency Act 1986,

the Construction Contractor or the Guarantor (as the case may be) receiving such property or amount will hold such property or amount so received on trust for the Security Trustee (to the extent possible under applicable law) and shall forthwith (in any event) pay any and all such property or amounts to the Security Trustee. Any amounts so received by the Security Trustee shall be applied in accordance with the Intercreditor Agreement.

17. INSURANCE PROCEEDS

To avoid doubt, each Party to this Agreement confirms that it has seen and understood the terms of the Funders' Direct Agreement, the Project Agreement, the Intercreditor Agreement and the Common Terms Agreement including, without limitation, the clauses and schedules

of those agreements which relate to the Insurance Proceeds Account and the Board Insurance Proceeds Account (as defined in the Common Terms Agreement) and hereby irrevocably authorises the Security Trustee (without any liability or responsibility on its part) to act in accordance with those agreements, to perform its obligations (and exercise its rights) thereunder and to effect all withdrawals, releases, payments (whether to the Board or to any other person), transactions and other arrangements relating to the Insurance Proceeds Account and/or the Board Insurance Proceeds Account provided for therein.

18. EXPIRY

The rights and obligations of the Security Trustee and the Intercreditor Agent under this Agreement shall be extinguished upon the Discharge Date.

19. SECURED CREDITORS' LIABILITIES

The obligations of each Secured Creditor, the Intercreditor Agent and the Security Trustee under this Agreement are joint and none of them shall be responsible for the obligations of any other under this Agreement. Failure of a Secured Creditor, the Intercreditor Agent or the Security Trustee to perform those obligations shall not relieve any other Party from any of its or their respective obligations under this Agreement or any Project Document.

20. WAIVER

Unless otherwise expressly stated in writing, failure by any Party at any time to enforce any provision of this Agreement or to require performance by any other Party of any provision of this Agreement shall not be construed as a waiver of such provision and shall not affect the validity of this Agreement or any part of it or the right of the relevant Party to enforce any provision in accordance with its terms.

21. SEVERABILITY

If any condition, clause or provision of this Agreement, not being of a fundamental nature, is held to be illegal or unenforceable, the validity or enforceability of the remainder of this Agreement shall not be affected thereby.

22. AMENDMENTS

No amendment to this Agreement shall be binding unless in writing and signed by the duly authorised representatives of each of the Parties.

23. CONTINGENT FUNDING AGREEMENT

The Parties agree that where pursuant to the Contingent Funding Agreement, the Guarantor is obliged to make an Advance to Project Co but has not done so pursuant to clause 3.1 of the Contingent Funding Agreement, Project Co shall be deemed to have paid the Shortfall to the Construction Contractor and thereby satisfied its obligation to pay the Construction Contractor in respect of such amount under the Construction Contract, and the Guarantor shall be deemed to have paid the Advance to Project Co under the Contingent Funding Agreement.

24. GOVERNING LAW AND JURISDICTION

24.1 Law

This Agreement, which shall be considered as a contract made in Scotland, and all non-contractual obligations arising in any way whatsoever out of or in connection with this Agreement shall be governed by, construed and take effect in accordance with the laws of Scotland.

24.2 **Jurisdiction**

Subject to Clause 10.1 (*Disputes*), it is agreed that the courts of Scotland shall have exclusive jurisdiction to hear and settle any action, suit, proceeding, claim, dispute or matter of difference which may arise in any way whatsoever out of or in connection with this Agreement (including without limitation claims for set-off or counterclaim) or the legal relationships established by this Agreement.

IN WITNESS whereof these presents consisting of this and the preceding 18 pages together with the Schedule are executed by the Parties as follows:

For and on behalf of **Brookfield Multiplex Construction Europe Limited**

signature of director/secretary/authorised signatory/witness	signature of director/secretary/authorised signatory
full name of above (print)	full name of above (print)
	date of signing
address of witness	place of signing

For and on behalf of **Brookfield Multiplex Pty Ltd**

signature of director/secretary/authorised signatory/witness	signature of director/secretary/authorised signatory
full name of above (print)	full name of above (print)
	date of signing
address of witness	place of signing

For and on behalf of IHS **Lothan Limited**

signature of director/secretary/authorised signatory/witness	signature of director/secretary/authorised signatory
full name of above (print)	full name of above (print)
	date of signing
address of witness	place of signing

For and on behalf of **Prudential Trustee Company Limited**

signature of director/secretary/authorised signatory/witness	signature of director/secretary/authorised signatory
full name of above (print)	full name of above (print)
	date of signing
address of witness	place of signing

For and on behalf of **M&G Investment Management Limited**

signature of director/secretary/authorised signatory/witness	signature of director/secretary/authorised signatory
full name of above (print)	full name of above (print)
	date of signing
address of witness	place of signing

THIS IS THE SCHEDULE REFERRED TO IN THE FOREGOING DIRECT AGREEMENT BETWEEN (1) [BROOKFIELD MULTIPLEX CONSTRUCTION EUROPE LIMITED] (AS CONSTRUCTION CONTRACTOR), (2) [BROOKFIELD MULTIPLEX PTY, LIMITED] (AS GUARANTOR), (3) [PROJECT CO] (AS PROJECT CO), (3) PRUDENTIAL TRUSTEE COMPANY LIMITED (AS SECURITY TRUSTEE) AND (4) M&G INVESTMENT MANAGEMENT LIMITED (AS INTERCREDITOR AGENT).

THE SCHEDULE

Form of Novation Agreement

THIS NOVATION AGREEMENT is made on 20[**]

BETWEEN:

(1) [ ] (registered number [ ]) whose registered office is at [ ] (the "**Construction Contractor**");

(2) [ ] (registered number [ ]) whose registered office is at [ ] (the "**Guarantor**");

(3) [ ] (registered number [ ]) whose registered office is at [ ] ("**Project Co**");

(4) [ ] (registered number [ ]) whose registered office is at [ ] (the "**Novatee**").

WHEREAS:

This Agreement is entered into pursuant to a direct agreement dated [•] 20[***] between the Construction Contractor, the Guarantor, Project Co, the Security Trustee and the Intercreditor Agent as defined therein (the "**Lenders' Construction Contract Direct Agreement**").

IT IS AGREED as follows:

1. Terms defined in the Lenders' Construction Contract Direct Agreement shall have the same meaning herein.

2. This is a novation agreement in accordance with clause 7.3 of the Lenders' Construction Contract Direct Agreement and in respect of which the Novation Date is [•].

3. The Parties hereto acknowledge and agree that, on and with effect from the Novation Date:

   (a) the Novatee shall become a party to the Construction Contract by way of delegation in place of Project Co and thereafter the Novatee shall be treated as if it had originally been named as a party thereto in place of Project Co and Project Co shall be released from all its obligations under the Construction Contract;

   (b) the Novatee shall assume and enjoy the rights, powers, privileges and perform and discharge the obligations, liabilities and duties of Project Co under the Construction Contract and Project Co shall be released from all such obligations, liabilities and duties PROVIDED THAT the Novatee's liability shall be limited in accordance with clause 7.3(c) of the Lenders' Construction Contract Direct Agreement;

   (c) the Construction Contractor shall owe its obligations, liabilities and duties under the Construction Contract to the Novatee in place of Project Co;

(d) the Novatee shall become a party to the Contractor Guarantee in place of Project Co and thereafter the Novatee shall be treated as if it had originally been named as a party thereto and beneficiary thereunder in place of Project Co;

(e) the Novatee shall assume and enjoy the rights and benefits of Project Co under the Contractor Guarantee; and

(f) the Guarantor shall owe its obligations, liabilities and duties under the Contractor Guarantee to the Novatee in place of Project Co.

4. Any Construction Contractor Termination Notice issued pursuant to the Lenders' Construction Contract Direct Agreement and any Termination Action taken shall be revoked and shall be of no further effect.

5. This Agreement and all non-contractual obligations arising in any way whatsoever out of or in connection with this Agreement shall be governed by, construed and take effect in accordance with the laws of Scotland.

IN WITNESS whereof these presents consisting of this and the preceding page are executed by the Parties hereto as follows:-

For and on behalf of **[name of Construction Contractor]**

signature of director/secretary/authorised signatory/witness	signature of director/secretary/authorised signatory
full name of above (print)	full name of above (print)
	date of signing
address of witness	place of signing

For and on behalf of **[Guarantor]**

signature of director/secretary/authorised signatory/witness	signature of director/secretary/authorised signatory
full name of above (print)	full name of above (print)
	date of signing
address of witness	place of signing

For and on behalf of [**name of Project Co**]

signature of
director/secretary/authorised signatory/witness

full name of above (print)

signature of
director/secretary/authorised signatory

full name of above (print)

date of signing

address of witness

place of signing

For and on behalf of [name of **The Novatee**]

signature of
director/secretary/authorised signatory/witness

full name of above (print)

signature of
director/secretary/authorised signatory

full name of above (print)

date of signing

address of witness

place of signing

SCHEDULE PART 5

LAND MATTERS

SECTION 1 – TITLE CONDITIONS

1. Little France Steading has the benefit of the following rights:

   1.1 a servitude right to lay and thereafter maintain a pipe connecting Little France Steading to the main sewer running through the Campus Site to the northwest of Little France Steading, subject to causing as little inconvenience as possible during pipe laying operations and making good any damage caused to the surface of the said subjects occasioned by the laying of the pipe or the maintenance thereof;

   1.2 a right to enter that part of the Campus Site lying to the northeast of Little France Steading in so far as this may be necessary for the repair, maintenance or renewal of the buildings erected on these subjects.

2. 217 Old Dalkeith Road has the benefit of a heritable and irredeemable servitude right of access and egress for vehicular and pedestrian traffic in all time coming over that part of the access road shown on Plan 9 as is required to give access to 217 Old Dalkeith Road.

3. [Not Used]

4. [Not Used]

5. **Use of the Campus Site by Project Co**

   The Contractor and any Contractor Parties shall not be permitted to use any part of the Campus Site (including, without prejudice to the foregoing generality, the car parks, shops, restaurants, toilets, concourses and corridors forming the Campus Site except (a) as otherwise provided for in this Agreement, or (b) with the express permission of the Board, or (c) with regard to the accident and emergency department within the RIE Facilities, in the case of a medical emergency).

6. The following title conditions apply from the date upon which the Project Co notifies the Contractor that they shall have effect:

   6.1 a right of access and egress for pedestrians and vehicles over the Access Roads (Future) in favour of each Campus Party.

   6.2 the Contractor shall not park or leave unattended or cause or permit to be left parked or unattended any vehicles, trucks or trailers on or otherwise in any way obstruct, cause or permit to be obstructed any part of the Access Roads (Future).

   6.3 the Campus Site is subject to an absolute prohibition in all time coming on the use of any part of the Site for any purpose falling within Classes 5 and 6 of the Schedule to the Town and Country Planning (Use Classes) (Scotland) Order 1997.

   6.4 each Campus Party have the benefit of rights to connect into mains services running through the Campus Site and any service media and the right to lay, construct, maintain and repair gas, water, drainage and sewage pipes and telephone cables and wires through the Campus Site along routes to be agreed with the relevant Campus Party who shall be bound to act reasonably in this regard subject to the following provisos:

      6.4.1 the Campus Party exercising the rights shall be responsible for obtaining and complying with all necessary statutory and other consents and approvals

required in connection with the works involved in relation to such connection and the installation of such pipes and conduits;

6.4.2 the Campus Party exercising the foregoing rights shall do so at reasonable times (upon prior appointment except in the case of emergency) and shall do so in such a manner as to cause the least disturbance and inconvenience reasonably practicable to the relevant part of the Campus Site or the business being carried out thereon;

6.4.3 the Campus Party exercising the foregoing rights shall pay compensation to the owner of that part of the Campus Site affected by the exercise of the foregoing rights for any loss or physical damage caused to any part of the Campus Site and any buildings, structures or others erected thereon, or any plant, equipment and moveable items located thereon, (such rights of compensation to be agreed between the parties, or failing such agreement as determined by the Chairman of the Scottish Branch of the Royal Institute of Chartered Surveyors).

7. **Petrol Station Site**

During the Construction Phase, the Petrol Station Site is subject to the following burdens:

7.1 The Contractor shall not use or permit the Petrol Station Site or any part thereof to be used for any of the following purposes:

7.1.1 residential accommodation or development, which includes any form of accommodation that is designed as and/or converted into accommodation in which people sleep or reside whether or not on a permanent basis or as a principal residence;

7.1.2 hotel, hostel, guest house or bed and breakfast accommodation;

7.1.3 campsite or caravan site;

7.1.4 nursing home or similar geriatric facility or healthcare facility for children, disabled or injured persons in which persons sleep or reside;

7.1.5 place of worship;

7.1.6 nursery, school or a playground;

7.1.7 growing any produce for the purpose of human consumption or consumption by any living thing, or any other agricultural use;

7.1.8 processing food;

7.1.9 the construction or installation of:

(a) any water wells for drinking or food processing, or

(b) basement living space or any underground living space;

7.1.10 the construction or installation of

(a) underground storage space (including vehicle parking spaces),

(b) underground utility space, and

(c) additional underground utility conduits.

7.2 The Contractor shall:

7.2.1 not construct, install or make use of any basement or other sub ground level accommodation or facility in or under any part of the Petrol Station Site other than for (1) foundations, (2) Services (which for the purposes of this paragraph 7 of Section 1 of Schedule Part 5 *(Land Matters)* shall mean pipes, cables, conduits and utility spaces where those items are vapour tight, and shall not wells or boreholes for the abstraction of water) and (3) temporary boreholes for testing of soil and ground water and (4) use of underground storage tanks in relation to the permitted use;

7.2.2 not remove, alter or compromise the integrity of any Membrane and Fill Works (which for the purposes of this paragraph 7 of Schedule Part 5 *(Land Matters)* shall mean. the laying of an appropriate membrane that prevents exposure of users of the relevant part of the Petrol Station Site to contaminants that may be present overlaid by a protective layer of uncontaminated fill of appropriate depth) undertaken on the Petrol Station Site other than in compliance with paragraph 7.2.4;

7.2.3 install during the course of any development upon the Petrol Station Site such other building design, controls and safeguards (including protective of human health and the Environment) as an appropriately experienced environmental engineer appointed by the Contractor recommends or may be required by relevant Regulatory Authorities;

7.2.4 as part of any permitted works upon the Petrol Station Site, undertake Membrane and Fill Works protective of human health in accordance with a design specification and method statement approved by an appropriately experienced environmental engineer and that to the satisfaction of any relevant Regulatory Authorities (which, for *the purposes of this paragraph* 7 of Section 1 of Schedule Part 5 *(Land Matters)*, Regulatory Authority means any competent authority having powers and duties in relation to the enforcement of any law rule regulation or obligation existing adopted made commenced introduced or otherwise brought into force prior to or after this transfer concerning the protection of human health the Environment or any Relevant Substances and for the avoidance of doubt the expression 'Regulatory Authority' shall not include any court of law, and "Regulatory Authorities" shall be construed accordingly);

7.2.5 install a Vapour Barrier (which for the purposes of this paragraph 7 of Section 1 of Schedule Part 5 *(Land Matters)* shall mean a membrane that prevents the migration of vapours from the underlying soil to the interior of each building upon the Petrol Station Site) protective of human health during the course of construction of each building from time to time constructed upon the Petrol Station Site in accordance with a design specification and method statement approved by an appropriately experienced environmental engineer appointed by the Contractor and that to the satisfaction of all relevant Regulatory Authorities;

7.2.6 not remove, alter or compromise the integrity of any Vapour Barrier installed pursuant to paragraph 7.2.5 above unless as part of demolition of the relevant building or the relevant part of such building;

7.2.7 not open up create or use any borehole or water abstraction point upon the Petrol Station Site and upon discovery of any well or borehole upon the Petrol Station Site providing an actual or potential supply of water without unreasonable delay to permanently decommission and plug the same in accordance with a design specification and method statement of an appropriately experienced environmental engineer appointed by the Contractor and to the satisfaction of all relevant Regulatory Authorities;

7.2.8 install Engineering Controls (which, for the purpose of this paragraph 7 of Section 1 of Schedule Part 5 *(Land Matters)* means such controls as are required to effectively prevent the migration of vapours and or liquids containing Relevant Substances into any buildings underground utilities or storm water retention/detention ponds upon the Burdened Land including (without limitation) slab or at grade construction vapour installations systems, vapour barriers, sealed sumps and storm pond liners) protective of human health during the course of construction of each building from time to time constructed upon the Petrol Station Site in accordance with a design specification and method statement approved by an appropriately experienced environmental engineer appointed by the Contractor and to the satisfaction of all relevant Regulatory Authorities;

7.2.9 not remove alter or compromise the integrity of any Engineering Controls installed at the Petrol Station Site unless as part of demolition of the relevant building or the relevant part of such building; and

7.2.10 install during the course of any development upon the Petrol Station Site such building design, controls and safeguards (including protective of human health and the environment) as an appropriately experienced environmental engineer appointed by the Contractor recommends or may be required by relevant Regulatory Authorities.

SECTION 2 – RESERVED RIGHTS

1. To each Campus Party the full free and uninterrupted passage and running of water, sewage, drainage or oil, gas, electricity, telephone (and other telecommunications) and other services through the Campus Site by or through the pipes, channels, drains, sewers, conduits, water courses, wires, cables and other conducting media which currently or at any time in the future may be located within the Campus Site.

2. To each Campus Party or any party on behalf of any of them, the right to connect into and maintain, repair, renew and replace existing pipes, channels, drains, sewers, conduits, water courses, wires, cables and other conducting media through, under and over the Retained Site for the passage of services referred to in paragraph 1.

3. To each Campus Party or any party on behalf of any of them, the right to maintain, repair and renew and replace existing pipes, channels, drains, sewers, conduits, water courses, wires, cables and other conducting media through, under and over the Site for the passage of services referred to in paragraph 1 above subject to the following conditions:

   3.1 this right is exercisable on reasonable prior notice being given (except in an emergency) to the Contractor;

   3.2 the right shall be exercised in such a manner as shall cause the minimum practicable disruption to the use and occupation of the Site;

   3.3 the Project Co shall procure that any physical damage to the Site and any buildings, structures and others erected thereon and any plant, machinery and equipment resulting from the exercise of the rights is made good by the Board.

4. To each Campus Party or any party on behalf of any of them, a right of access over the Site where necessary in connection with the carrying out of works of maintenance, repair and renewal and replacement to the Retained Site and/or Retained Estate subject to the following conditions:

   4.1 this right is exercisable on reasonable prior notice being given (except in an emergency) to the Contractor;

4.2 the right shall be exercised in such a manner as shall cause the minimum practicable disruption to the use and occupation of the Site;

4.3 the Project Co shall procure that any physical damage to the Site and any buildings, structures and others erected thereon and any plant, machinery and equipment resulting from the exercise of the rights is made good by the Board.

5. To the Board and/or any Board Party and/or Consort and/or any Consort Party or any party on behalf of them, a right of overhang in respect of the canopy forming part of the RIE Facilities at the A&E entrance and a right to retain pillars supporting the said canopy, for so long as they subsist (in their existing form or as replaced or renewed from time to time) to the extent that such pillars or canopy are within the remainder of the RIE Facilities together with all rights of access over the Site where necessary for the purposes of carrying out any works of maintenance, repair, renewal or replacement of the canopy and pillars, provided that the rights in this paragraph 5 shall cease to be enforceable following the permanent dismantling and removal of the canopy and pillars.

6. To the Board and/or any Board Party and/or the University and/or any University Party a right of pedestrian and vehicular access over the Access Roads.

7. To the Board and/or any Board Party and/or the University and/or any University Party, a right of access and egress for pedestrians and cycles over the footpaths and cycle routes on the Retained Site as shall be provided from time to time (including for the avoidance of doubt the temporary diversion of such routes as required by Schedule Part 31 *(Consort Interface with Campus Site and/or Campus Facilities) of the Project Agreement*) for general use by members of the public;

8. To the Board and/or any Board Party or any party acting on their behalf all necessary rights required for the maintenance and cleansing of the Niddrie Burn.

9. To the Board and/or any Board Party and/or Consort and/or any Consort Party, an exclusive right of occupation over the RIE Site, subject to the Reserved Rights and the Ancillary Rights.

10. To the Board and/or any Board Party and/or the University and/or any University Party, an exclusive right of occupation over the University Site;

11. To each Campus Party or any party on behalf of any of them a right to inspect, maintain, repair, renew and/or replace any service media, buildings, structures and others erected thereon and any plant, machinery and equipment located within or adjacent to any part or parts of the Access Areas which are occupied and/or hoarded off by the Contractor or a Contractor Party pursuant to Section 5 (*Access Areas and Drainage*) of Part 1 (*Interface Construction Issues and Interface Proposals* of Schedule Part 31 *(Consort Interface with Campus Site and/or Campus Facilities)* of the Project Agreement and if any such party requires to access such areas to inspect, maintain, repair, renew and/or replace as aforesaid then the following provisions shall apply:

11.1 except in the case of an emergency, the Project Co shall give the Contractor reasonable prior notice of the requirement to enter such areas;

11.2 the Contractor shall provide the Board and/or any Board Party, and/or Consort and/or any Consort Party and/or the University and/or any University Party and/or any party authorised by them with the level of access required to implement their obligations and/or exercise their rights in regard to such service media, buildings, structures and others erected thereon and any plant, machinery and equipment;

11.3 the Project Co shall use reasonable endeavours to procure that the Board shall procure that Consort and the University shall in exercising the rights pursuant to this paragraph 11 cause as little inconvenience as is reasonably practicable to the Contractor; and

11.4 the Project Co shall use reasonable endeavours to procure that the Board shall procure that Consort and the University in exercising the rights pursuant to this paragraph 11 shall comply with the Contractor's reasonable site rules and requirements which are applied in accordance with Good Industry Practice.

12. To each Campus Party, or any party on behalf of any of them, a right to inspect, maintain, repair, renew and/or replace service media buildings, structures and others erected thereon and any plant, machinery and equipment, located within any parts of Car Park E which are occupied by the Contractor or a Contractor Party and/or are hoarded off pursuant to Section 1 of Part 1 of Schedule Part 31 *(Consort Interface with Campus Site and/or Campus Facilities)* of the Project Agreement (and provided always that the Contractor shall not locate any site accommodation at a location which could impede such a party in accessing service media) and if any such party requires to access such areas to inspect, maintain, repair, renew and/or replace aforesaid then the following provisions shall apply:

12.1 except in the case of an emergency where no prior notice is required, the Project Co shall give the Contractor reasonable prior notice of the requirement to enter Car Park E and/or the relevant part;

12.2 the Contractor shall provide the Board and/or any Board Party and/or Consort and/or any Consort Party, and the University and/or University Party and/or any party authorised by them with the level of access required to exercise their rights and/or implement their obligations in regard to such service media buildings, structures and others and any plant, machinery and equipment and without prejudice to the foregoing generality shall ensure that the areas under which the such service media, buildings, structures and others and any plant, machinery and equipment are located are not obstructed; and

12.3 the Project Co shall use reasonable endeavours to procure that the Board shall procure that Consort and/or the University shall in exercising the rights pursuant to this paragraph 12 cause as little inconvenience as is reasonably practicable to the Contractor.

12.4 the Project Co shall use reasonable endeavours to procure that the Board shall procure that Consort and the University in exercising the rights pursuant to this paragraph 12 shall comply with the Contractor's reasonable site rules and requirements which are applied in accordance with Good Industry Practice.

13. To the extent that the gas pipe serving the RIE Site and/or RIE Facilities is located within the Site the Contractor shall comply with the conditions and restrictions in paragraph 6.1.2 of Sub-Section C of the Board's Construction Requirements and there shall be reserved to the Board and/or any Board Party and/or Consort and/or any Consort Party and/or any party on behalf of any of them, rights of access to the Site to the extent required to maintain, repair, replace and renew the gas pipe and all necessary rights to maintain, repair, replace and renew the gas pipe.

14. To the extent that the Sewer serving the RIE Site and/or RIE Facilities and other neighbouring properties on and off the Campus Site part of which is located within the Site as shown in Plan 11 which forms part of the Disclosed Data, the Contractor shall comply with the conditions and restrictions in paragraph 6.1.1 of Sub-Section C of the Board's Construction Requirements and there shall be reserved to the Board and/or any Board Party and/or Consort and/or any Consort Party and/or any party on behalf of any of them, rights of access to the Site to the extent required to maintain, repair, replace and renew the Sewer and all necessary rights to maintain, repair, replace and renew the Sewer.

15. To each Campus Party and/or any party on behalf of any of them and other restrictions, reservations and others contained in Schedule Part 31 *(Consort Interface with Campus Site and/or Campus Facilities)* of the Project Agreement and in each of the Interface Proposals.

16. To the Board or Exxon Mobil Corporation (a company incorporated in the State of New Jersey in the United States of America and its predecessor and successor companies) a right to re-enter the Petrol Station Site to carry out any works, operations or steps for the purpose of preventing, mitigating or remedying Contamination to the Petrol Station Site that are required by any Regulatory Authority, but then only if the Contractor has failed to carry out such required remediation work.

17. There are reserved in favour of the local or public authorities and statutory undertakers, utilities companies or organisations and the like all necessary rights of access for the installation, repair, maintenance, cleaning and renewal of all electric and telegraphic cables, water, gas and drainage pipes, sewers, soil, waste and water supply pipes and all other cables, pipes and transmitters and other services serving the Site or running through the Site provided that such rights may be exercised by any local or public authority or statutory undertaker or utility company or organisation without any liability on the part of the Board.

SECTION 3 – ANCILLARY RIGHTS

The following Ancillary Rights are granted to the extent required for the purpose of implementing the Works, and fulfilling the Contractor's rights and obligations under this Agreement:

1. Occupancy

A non exclusive right to enter and remain on the Site;

2.. Construction Access over the Yellow Area and/or Petrol Station Site

The Contractor shall have the right to:-

2.1 form the Construction Access;

2.2 hoard off the Construction Access from the remainder of the Yellow Area and/or the Petrol Station Site;

2.3 use the Construction Access during the Construction Phase for access to and/or egress from the Site at all times for all kinds of construction traffic and pedestrians; and

2.4 carry out the Petrol Station Site Works at the Petrol Station Site,

subject to the Contractor complying with and carrying out such works and hoarding off in accordance with the provisions of paragraph 1 of Section 1 (*Construction Access*) of Part 1 (*Interface Construction Issues and Interface Proposals*) Schedule Part 31 *(Consort Interface with Campus Site and/or Campus Facilities)* of the Project Agreement and the Construction Access Proposal.

3. Construction Access Over The Orange Area

The Contractor shall have the right to take:

3.1 construction access to and egress from the Site for the carrying out and completion of the Works over the Orange Area; and

3.2 access to and egress from Car Park E over the Orange Area,

subject to the Contractor complying with and carrying out the Works over the Orange Area in accordance with the provisions of paragraph 2 of Section 1 (*Construction Access*)of Part 1 (*Interface Construction Issues and Interface Proposals*) of Schedule Part 31 *(Consort Interface with Campus Site and/or Campus Facilities)* of the Project Agreement and the TMS.

4. Access Areas

The Contractor shall have the right during the Construction Phase as part of the Works to:-

4.1 enter upon and occupy on an exclusive basis and where necessary hoard off from the remainder of the RIE Site any part or parts of the Access Areas in connection with the exercise of the rights granted in terms of the Access Strategy;

4.2 carry out works to form pedestrian and vehicular accesses to and from the Site onto the Orange Area;

4.3 reconfigure the roads, footpaths and landscaped areas within the Hatched Orange Area;

4.4 install the Surface Water Drainage Works from the Site to the existing surface water drain within the Orange Area; and

4.5 carry out the Cycle Path Works in the Yellow Area and the Service Strip;

subject to the Contractor complying with the conditions in Section 5 (*Access Areas and Drainage*) of Part 1 (*Interface Construction Issues and Interface Proposals*) of Schedule Part 31 (*Consort Interface with Campus Site and/or Campus Facilities*) of the Project Agreement and the Access Strategy, and in relation to the matters in the foregoing paragraph 4.4 the Initial Drainage Proposal and the Supplemental Drainage Proposal and where applicable the Amended Supplemental Drainage Proposal and/or Access Strategy agreed or determined pursuant to Section 2 (*Access Areas and Amended Supplemental Drainage Proposals*) of Part 2 (*Interface Proposals Procedure*) of Schedule Part 31 (*Consort Interface with Campus Site and/or Campus Facilities*) of the Project Agreement.

5. [NOT USED]

6. Service Strip and Foul Service Strip

The Contractor shall have the right to construct and lay and thereafter maintain, repair and renew service media through, under and over (1) the Service Strip for the passage of water, sewage, drainage or oil, gas, electricity, telephone (and other telecommunications), and (2) the Foul Service Strip for the passage of foul drainage, in each case as necessary in connection with the Works but subject to the Contractor complying with the conditions in Section 6 (*Service Strip and Foul Service Strip*) of Part 1 (*Interface Construction Issues and Interface Proposals*) of Schedule Part 31 *(Consort Interface with Campus Site and/or Campus Facilities)* of the Project Agreement and the Service Proposal and/or where applicable any Amended Service Proposal agreed or determined pursuant to Section 3 (*Amended Service Proposal*) of Part 1 () of Schedule Part 31 *(Consort Interface with Campus Site and/or Campus Facilities)* of the Project Agreement.

7. Link Building

Following the construction of the Link Building to the RIE Facilities within the Connection Area, the Contractor shall be entitled to:

7.1 install a Joint between the Facilities to the Link Building;

7.2 install interface links between the Fire Alarm System within the Facilities with those within the RIE Facilities;

7.3 install the PTS in relation to the Facilities; and

7.4 install the ICT in relation to the Facilities,

subject to the Contractor complying with the conditions in Section 7 (*Link Building*) of Part 1 (*Interface Construction Issues and Interface Proposals*) of Schedule Part 31 (*Consort Interface with Campus Site and/or Campus Facilities*) of the Project Agreement and the Connection Proposal.

8. Site Compound/Car Park E

During the Construction Phase the Contractor shall be entitled to occupy Car Park E and where necessary hoard off and segregate Car Park E or the relevant part thereof being occupied from the remainder of the Campus Site subject to the Contractor complying with the conditions in Section 3 (*Site Compound/Car Park E*) of Part 1 (Interface Constitution Issues and Interface Proposals) of Schedule Part 31 *(Consort Interface with Campus Site and/or Campus Facilities)* of the Project Agreement and the Interface Proposals.

9. Oversail

The Contractor shall be permitted to oversail parts of the Retained Site with the jib and/or counterweight of any crane subject to the Contractor complying with the requirements in Section 3 (*Site Compound/Car Park E)* of Part 1 (*Interface Constitution Issues and Interface Proposals*) of Schedule Part 31 *(Consort Interface with Campus Site and/or Campus Facilities)* of the Project Agreement and the Oversail Strategy and/or where applicable any Additional Oversail Strategy agreed or determined pursuant to Section 1 (*Oversail*) of Part 2 (*Interface Proposals Procedure*) of Schedule Part 31 *(Consort Interface with Campus Site and/or Campus Facilities)* of the Project Agreement.

9A Petrol Station Site

The Contractor shall be entitled to take access of the Petrol Station Site from the Yellow Area and to occupy and use the Petrol Station Site only for the purpose of a temporary modular office location.

9B Manhole

During the Construction Phase, the Contractor shall be entitled to construct, install, lay, commission, maintain, repair, renew and replace a water main/sewer pipe connection and any ancillary apparatus through the area shown as a continuous red line running between and connecting at the points marked MHF3 and MHF7 (indicated by a dotted red circle) and MHFX on Plan 12.

10. Access for remedying Defects/carrying out Snagging Matters

10.1 Following the Actual Completion Date the Contractor shall have the following rights of access to and egress from the Site for the purposes of remedying Defects and carrying out Snagging Matters:

10.1.1 (until adoption by the relevant authority for use as a public road) for pedestrians and vehicles (excluding heavy construction traffic) over and across the roads and footpaths shown coloured blue, coloured yellow and coloured pink and also hatched black (excluding the section of road coloured pink but unhatched) on Plan 6;

10.1.2 for pedestrians and vehicles (excluding heavy construction traffic) over and across the roads and footpaths shown coloured pink (excluding the section of road coloured pink and hatched black) on Plan 6 until such time as the Project Co notify the Contractor in writing that access over this area shall no longer be permitted;

10.1.3 a right of access over the Service Strip where necessary in connection with the carrying out of works or maintenance, repair and renewal to the Site. This right is subject to the following conditions:

(a) the right shall only be exercisable on reasonable prior notice (except in case of emergency) being given to the Board (who shall liaise with Consort);

(b) the right shall be exercised in such a manner as shall cause the minimum practicable disruption to the use and occupation of the Service Strip;

(c) the Contractor shall make good any physical damage to the Service Strip and any buildings, structures and others erected thereon and any plant, machinery and equipment resulting from the use of this right;

10.1.4 a right of access over the RIE Site where necessary in connection with the carrying out of works of maintenance, repair and renewal to the Facilities subject to the Contractor complying with the conditions in paragraph 1 of Section 2 (*Operational Construction Issues*) of Section 3 (*Site Compound/Car Park E*) of Schedule Part 31 *(Consort Interface with Campus Site and/or Campus Facilities)* of the Project Agreement and the Interface Proposals;

10.1.5 a right of access to the Service Strip and the Foul Service Strip to repair, maintain and renew service media serving the Facilities located within the Service Strip or the Foul Service Strip subject to the Contractor complying with the terms of Section 6 (*Service Strip and Foul Service Strip*) of Part 1 (*Interface Construction Issues and Interface Proposals*) of Schedule Part 31 *(Consort Interface with Campus Site and/or Campus Facilities)* of the Project Agreement and the Service Proposal, and where applicable any Amended Service Proposal agreed or determined pursuant to Section 3 (*Amended Service Proposal*) of Part 2 (*Interface Proposals Procedure*) of Schedule Part 31 *(Consort Interface with Campus Site and/or Campus Facilities)* of the Project Agreement;

10.1.6 a right of access to the RIE Facilities to:

(a) maintain, repair and renew interface links between the Fire Alarm Systems within the Facilities and those within the RIE Facilities;

(b) maintain, repair and renew the PTS in relation to the Facilities;

(c) maintain, repair and renew the ICT in relation to the Facilities,

(d) maintain, repair and renew the Joint,

subject to the Contractor complying with Section 7 (Link Building) of Part 1 (Interface Construction Issues with Interface Proposals) of Schedule Part 31 (Consort Interface with Campus Site and/or Campus Facilities) of the Project Agreement and the Connection Proposal.

10.1.7 During the Operational Term, the Contractor shall be entitled to construct, lay, commission, maintain, repair, renew and replace a water main/sewer pipe connection and any ancillary apparatus through the area shown as a continuous red line running between and connecting at the points marked MHF3 and MHF7 (indicated by a dotted red circle) and MHFX on Plan 12 (*Manhole*) in Schedule Part 27 (*Plans*).

11. Wherever in this Schedule Part 5 (*Land Matters*) the Contractor has an obligation to perform or comply with any matter, the Contractor shall procure that the Contractor Parties shall perform or comply with any such matter.

SCHEDULE PART 6

CONSTRUCTION MATTERS

SECTION 1

PLANNING/CONSENTS

[NOT USED]

SECTION 2

SAFETY DURING CONSTRUCTION

1 In this Section 2 (*Safety during Construction*) of Schedule Part 6 (*Construction Matters*) and wherever used elsewhere in this Agreement:

1.1 "**CDM Regulations**" means the Construction (Design and Management) Regulations 2007 (and "**CDM Regulation**" shall be construed accordingly); and

1.2 "the **client**", the "**Principal Contractor**", the "**CDM Co-ordinator**" and "the **Executive**" shall have the same meanings as are ascribed to them in the CDM Regulations.

2 As between the Contractor and Project Co, the Contractor shall be entirely responsible for the safety of any design which forms part of the Works and for the adequacy, stability and safety of all site operations and methods of construction.

3 The Contractor acknowledges that Project Co hereby elects to be treated as the only client in respect of the Works pursuant to CDM Regulation 8.

4 Project Co appoints the Contractor to act as CDM Co-ordinator. It is acknowledged and agreed that the Contractor shall appoint Brookfield Multiplex CDM Services Limited to perform the services set out in an appointment between the Contractor and Brookfield Multiplex CDM Services Limited dated on or about the date of this Agreement.

5 The Contractor hereby elects to be treated as the Principal Contractor in respect of the Works pursuant to CDM Regulation 14(2). The Contractor warrants that it has the competence, resources and capacity to, and shall, observe, perform and discharge or shall procure the observance, performance and discharge of:

5.1 all the obligations, requirements and duties of the Principal Contractor arising under the CDM Regulations in connection with the Works; and

5.2 all obligations incumbent on the Principal Contractor under any Code of Practice for the time being approved by the Health and Safety Commission pursuant to the Health and Safety at Work etc Act 1974 issued in connection with the CDM Regulations.

6 The Contractor shall provide to the Project Co's Representative within five (5) Business Days of its delivery to the Contractor two electronic copies (on computer disk, tape or other format) of each and every health and safety file and construction phase plan prepared by the CDM Co-ordinator pursuant to the CDM Regulations in relation to the Works and electronic or paper copies of every amendment or update made to such file during the Construction Phase.

SECTION 3

BOARD'S CONSTRUCTION REQUIREMENTS

Section 3 (*Board's Construction Requirements*) of Schedule Part 6 (*Construction Matters*) of the Project Agreement is hereby incorporated in this Agreement and forms part of this Agreement. All references to "Project Co" under Section 3 (*Board's Construction Requirements*) of Schedule Part 6 of the Project Agreement shall be deemed to be references to the Contractor for the purposes of this Agreement.

SECTION 4

PROJECT CO'S PROPOSALS

Section 4 (*Project Co's Proposals*) of Schedule Part 6 (*Construction Matters*) of the Project Agreement is hereby incorporated in this Agreement and forms part of this Agreement. All references to 'Project Co' under Section 4 (*Project Co's Proposals*) Schedule Part 6 of the Project Agreement shall be deemed to be references to "the Contractor" for the purposes of this Agreement.

SECTION 5

REVIEWABLE DESIGN DATA

Section 5 (*Reviewable Design Data*) of Schedule Part 6 (*Construction Matters*) of the Project Agreement is hereby incorporated into this Agreement and forms part of this Agreement. All references to Project Co in Section 5 (*Reviewable Design Data*) of Schedule Part 6 (*Construction Matters*) of the Project Agreement shall be deemed to be references to the Contractor.

SECTION 6

ROOM DATA SHEETS

Section 6 (*Room Data Sheets*) of Schedule Part 6 (*Construction Matters*) of the Project Agreement is hereby incorporated into this Agreement and forms part of this Agreement.

SECTION 7

THERMAL AND ENERGY EFFICIENCY TESTING PROCEDURE

1. INTRODUCTION

1.1 Main Principles

This Section **7** *(Thermal and Energy Efficiency Testing Procedure)* of Schedule Part 6 (*Construction Matters*), sets out the structure and main principles of the Thermal and Energy Efficiency Testing procedures to be carried out by the Contractor at the Facilities in order to ascertain the As Built Facilities Energy Performance. In particular, this Section **7** *(Thermal and Energy Efficiency Testing Procedure)* of Schedule Part 6 (*Construction Matters*), sets out the tests that shall be carried out during the Final Commissioning Period to ensure the completed Facilities comply with the agreed Energy Performance, or if improved, the Energy Performance stated in Section 4 *(Project Co's Proposals)* of Schedule Part 6 (*Construction Matters*).

2. Testing of the Thermal and Energy Model

The Contractor shall provide an As Built Energy Model for the Facilities to ensure compliance with the agreed Energy Performance, or if improved, the Energy Performance stated in Section 4 *(Project Co's Proposals)* of Schedule Part 6 (*Construction Matters*).

3. As Built Energy Model

3.1.1 Prior to the Commissioning End Date, the Contractor shall submit an As Built Energy Model for the Board's review on behalf of the Project Co.

3.1.2 The information provided with the As Built Energy Model shall be in line with Good Industry Practice, and consistent with the level of information submitted in Section 4 *(Project Co's Proposals)* of Schedule Part 6 (*Construction Matters*) and consistent with the Section 3 *(Board's Construction Requirements)* of Schedule Part 6 (*Construction Matters*).

3.1.3 The As Built Energy Model shall be developed from Financial Close Energy Model. When updating to the As Built Energy Model, the Contractor shall not amend any parameters of the Financial Close Energy Model other than where agreed in writing with the Board or where those parameters are affected by the information and commissioning tests detailed below.

3.1.4 The Contractor shall include the following updates in the As Built Energy Model:

(a) As built building envelope and construction materials performance;

(b) As installed manufacturers' plant and components information, including all associated operating parameters such as co-efficient of performance;

(c) Results of building wide commissioning of completed installations including, but not limited to, all Heating, Ventilation and Cooling (HVAC) systems and lighting systems; and

(d) Results of commissioning period tests as detailed in paragraph 3 of this Section **7** *(Thermal and Energy Efficiency Testing Procedure)* of Schedule Part 6 (*Construction Matters*).

3.1.5 The Contractor shall ensure the completed Facilities meet the Energy Performance or if improved, the Energy Performance stated in Section 4 *(Project Co's Proposals)* of Schedule Part 6 (*Construction Matters*) following input of all the above information.

3.1.6 The Contractor shall clearly report input information and results of the As Built Energy Model for the Board's review and approval. Reporting shall highlight where input parameters have been altered from the Financial Close Energy Model, and the reason for the change i.e. following commissioning period testing.

4. COMMISSIONING PERIOD TESTS

4.1 Introduction

4.1.1 Notwithstanding the Contractor's obligation to undertake all commissioning requirements of Schedule Part 10 (*Outline Commissioning Programme*) and Appendix B *(Completion Criteria)*, the Contractor shall undertake the following commissioning period tests in an agreed test zone (or with respect to the Air tightness test for all zones in the Facilities), to be agreed by the Contractor and Project Co, acting reasonably, to demonstrate the actual Energy Performance of the Facilities:

(a) Air tightness test;

(b) Internal lighting installation test;

(c) Building fabric performance test; and

(d) Seasonal heating, cooling and ventilation installation testing.

4.1.2 The Project Co shall be acting reasonably in withholding agreement to any test where the Board withholds its consent under the equivalent provision in the Project Agreement. The Contractor shall incorporate the results of the commissioning period tests as detailed in this paragraph 3 of this Section 7 *(Thermal and Energy Efficiency Testing Procedure)* of Schedule Part 6 (*Construction Matters*), in the As Built Energy Model.

4.1.3 The Contractor shall interpolate all results from the commissioning period tests such that the confirmed performance of the Facilities/installations following the commissioning period tests is applied across the complete Facilities in the As Built Energy Model.

4.1.4 The Contractor shall submit all commissioning period test results and interpolative calculations to the Project Co and to the Board as part of their As Built Energy Model submission for the Board's review.

4.1.5 An indication of the methodology of the commissioning period tests are outlined below, however the final extent and scope of the tests to be undertaken shall be developed and agreed by the Board and Project Co, pursuant to the Project Agreement.

4.2 Air Tightness Test

4.2.1 The Contractor shall carry out an air tightness test for the Facilities as outlined and in compliance with the Scottish Technical Standards and as detailed in CIBSE Technical Memorandum TM23-2000.

4.2.2 This air leakage rate should demonstrate the construction quality of the Facilities and allow a direct correlation to the assumed value used in the As Built Energy Model, detailed in m3/m2/h@50P.

4.3 Internal Lighting Installation

4.3.1 The lighting installation serving the agreed area/zone shall be completed, commissioned and operational and manually enabled for an agreed fixed period of time.

4.3.2 All lighting controls tested shall be as those installed in the Facilities and shall include all automatic presence and photocell sensors, time controls and manual switching/dimming controls.

4.3.3 The operating usage and hours for the lighting installation within the test zone and period shall be as the operating profiles in the Financial Close Energy Model.

4.3.4 The lighting distribution board feeding the agreed area/zone shall be separately metered to provide the actual energy consumption for that area which shall confirm, or otherwise inform, the lighting energy consumption in the As Built Energy Model.

4.3.5 The Contractor shall undertake light meter tests in the agreed area/zone to confirm, or otherwise inform, the lighting levels within the respective areas in the As Built Energy Model.

4.4 Building Fabric Performance

4.4.1 The thermal performance of the Facilities building fabric shall be assessed by the Contractor within the agreed area/zone.

4.4.2 The Contractor shall undertake the necessary tests to confirm the thermal performance of window, external door, ground floor, roof and external wall areas, as agreed between the Contractor and the Project Co, acting reasonably, within the agreed test zone. The Project Co shall be acting reasonably in withholding agreement to any test where the Board withholds its consent under the equivalent provisions in the Project Agreement.

4.4.3 The Contractor shall further undertake thermographic surveys, to the relevant British Standards, of the agreed test areas to prove the quality of the thermal performance of the Facilities.

4.4.4 The thermal performance assessment in the agreed test zone shall confirm the thermal performance figures used for the building constructions, and all assumptions on thermal bridging, assumed within the As Built Energy Model.

4.5 Seasonal Heating, Cooling and Ventilation Installation Testing

4.5.1 Energy testing of the heating, cooling and ventilation system shall require seasonal testing of the completed, commissioned and operational main heating plant and any cooling and ventilation plant serving the agreed area/zone.

4.5.2 The Contractor shall incorporate in its commissioning programme the ability to monitor the heating, and any cooling and ventilation, installations during extremes of ambient conditions, for example testing heating systems within the winter months, and testing cooling systems in the summer months

complete with fully simulated heat gains, as agreed with between the Project Co and the Board in the Financial Close Energy Model.

4.5.3 The main heating/cooling distribution pipework feeding the agreed test area/zone shall be separately metered (for the test area/zone) and the BMS/controls installation shall require to be manually adjusted to simulate an agreed operating period.

4.5.4 Ventilation systems shall be assessed at maximum power on maximum pressure drop across the system.

4.5.5 The power feeds serving the agreed area/zone heating, cooling and ventilation systems shall be further separately metered to provide the actual energy consumption for those services within that area.

4.5.6 The actual power consumption of the installations during the testing period will confirm, or otherwise inform, the Contractor's assumed co-efficients of performance, specific fan powers and energy efficiency ratings for the heating, ventilation and cooling systems in the As Built Energy Model; this being based on power inputs, heat/air flow rates/cooling outputs and associated ambient conditions during the testing procedures.

SECTION 8

QUALITY PLANS (DESIGN AND CONSTRUCTION)

The Quality Plans (Design and Construction) set out in Section 4.20 (*Quality Plan*) of Section 4 (*Project Co's Proposals*) of Schedule Part 6 (*Construction Matters*) of the Project Agreement are hereby incorporated in to this Agreement and form part of this Agreement.

SECTION 9

THE AGREED FORM BOARD'S QUALIFICATIONS/COMMENTS

lin respect of Operational Functionality Requirements set out in Section 9 of Schedule Part 6 of the Project Agreement are hereby incorporated into, and form part of, this Agreement.

SCHEDULE PART 7

THE PROGRAMME

Schedule Part 7 (*The Programme*) of the Project Agreement is hereby incorporated into this Agreement and forms part of this Agreement.

SCHEDULE PART 8

REVIEW PROCEDURE

1. REVIEW

1.1 The provisions of this Schedule Part 8 (*Review Procedure*) shall apply whenever any item, document or course of action is required to be reviewed, approved or otherwise processed in accordance with Schedule Part 8 (*Review Procedure*).

1.2 Subject to any express provision of this Agreement, the manner, form and timing of any submission to be made by the Contractor to the Project Co's Representative for review under this Schedule Part 8 (*Review Procedure*) shall be a matter for Project Co to determine. On a monthly basis, the Contractor will provide to Project Co's Representative a programme of submissions that will be made in the following two months (Monthly Programme). Each submission under this Schedule Part 8 (*Review Procedure*) shall be accompanied by a copy of the proposed document to be reviewed (including, where applicable, any Reviewable Design Data) or a statement of the proposed course of action (the entire contents of a submission being referred to in this Schedule Part 8 (*Review Procedure*) as a "**Submitted Item**"). In relation to each Submitted Item, the following procedure shall apply:

1.2.1 as soon as possible and, if the Submitted Item comprises:

(a) an item of Reviewable Design Data;

(b) a revised Programme submitted pursuant to Clause 14 (*Programme and Dates for Completion*); or

(c) a document or proposed course of action submitted in the case of (an emergency),

within seventeen (17) Business Days of the date of receipt of a submission (or re-submission, as the case may be) of the Submitted Item to the Project Co's Representative (or such other period as the parties may agree), the Project Co's Representative shall return one copy of the relevant Submitted Item to the Contractor endorsed "no comment" or (subject to and in accordance with paragraph 3 (*Grounds of Objection*)) "comments" as appropriate; and

1.2.2 Subject to paragraph 1.4, if the Project Co's Representative fails to return a copy of any Submitted Item (including any re-submitted Submitted Item) duly endorsed in accordance with paragraph1.2.1, within seventeen (17) Business Days (or within such other period as the parties may agree in writing) of the date of its submission to the Project Co's Representative, then the Project Co's Representative shall be deemed to have returned the Submitted Item to the Contractor endorsed "no comment" (and, in the case of Reviewable Design Data, endorsed "Level A - no comment"); and

1.2.3 In relation to the aspects of each Finish identified in the table below:

(a) the Contractor shall submit to the Project Co a range or selection of finishes ("**Range of Finishes**") no later than the relevant Finishes Proposal Date;

(b) the Board's Representative shall by the relevant Finishes Selection Date notify the Project Co of its selection for the relevant Finish under the Project Agreement and Project Co shall advise the Contractor of such selection; and

(c) if no selection of a Finish has been made by the Board's Representative and notified to the Project Co in accordance with paragraph 1.2.3(b) of the Project Agreement by the relevant Finish Selection Date, the Contractor shall be entitled to make a selection from the Range of Finishes submitted in accordance with paragraph 1.2.3(a). After the relevant Finish Selection Date, should the Board wish to vary any selection previously made by Project Co or by the Board such variation shall be effected as a Change in accordance with Schedule Part 16 (*Change Protocol*).

Table of Finishes

Finishes	**Aspects**	**Finishes Proposal Date**	**Finishes Selection Date**
External envelope and finishes including roof, windows, horizontal glazing or equivalent, cladding screens, ventilation outlets and grilles comprising the external elevations and roofing all incorporated in minimum of full size three mock-ups	colour and materials and detailing	13/04/15 or such earlier date as may be proposed by the Contractor	15 Business Days after the Finishes Proposal Date
internal wall finishes	colour and specification	09/10/15 (finishes) or such earlier date as may be proposed by the Contractor 21/12/15 (wall paint) or such earlier date as may be propsed by the Contractor	15 Business Days after the Finishes Proposal Date
ceiling finishes	colour and specification	28/10/15 or such earlier date as may be proposed by the Contractor	15 Business Days after the Finishes Proposal Date
floor finishes	colour and specification	28/10/15 or such earlier date as may be proposed by the Contractor	15 Business Days after the Finishes Proposal Date
doors and screens	colour and specification	11/09/15 or such earlier date as may be proposed by the Contractor	15 Business Days after the Finishes Proposal Date
ironmongery (windows and doors)	style, colour and specification	13/04/15 (external) or such earlier date as may be proposed by the Contractor 11/09/15 (internal) or such earlier date as may be proposed by the Contractor	15 Business Days after the Finishes Proposal Date
sanitary fittings	style and content	01/03/16 or such earlier date as may be proposed by the	15 Business Days after the Finishes Proposal Date

		Contractor	
reception counters and desks	colour, content, style and material	26/10/15 or such earlier date as may be proposed by the Contractor	15 Business Days after the Finishes Proposal Date
nurses station	colour, content, style and material	26/10/15 or such earlier date as may be proposed by the Contractor	15 Business Days after the Finishes Proposal Date
main public light fittings	specification and style	01/12/15 or such earlier date as may be proposed by the Contractor	15 Business Days after the Finishes Proposal Date
lifts – walls, ceilings and floors, external finishes and trims.	colour, content, style and material	01/06/15 or such earlier date as may be proposed by the Contractor	15 Business Days after the Finishes Proposal Date
external signage	size, style, colour and location	16/06/16 or such earlier date as may be proposed by the Contractor	15 Business Days after the Finishes Proposal Date
internal signage	size, style, colour and location	18/01/16 or such earlier date as may be proposed by the Contractor	15 Business Days after the Finishes Proposal Date
light switches and sockets	style and colour	01/12/15 or such earlier date as may be proposed by the Contractor	15 Business Days after the Finishes Proposal Date
light fittings	style and colour	01/12/15 or such earlier date as may be proposed by the Contractor	15 Business Days after the Finishes Proposal Date
hard landscaping	colour and material	09/02/15 or such earlier date as may be proposed by the Contractor	15 Business Days after the Finishes Proposal Date
soft landscaping	specification, material and colour	22/04/16 or such earlier date as may be proposed by the Contractor	15 Business Days after the Finishes Proposal Date
boundary fencing and enclosures	size, style, colour and location	09/12/15 or such earlier date as may be proposed by the Contractor	15 Business Days after the Finishes Proposal Date
stairs, treads, balustrades and handrails	style and colour	17/11/15 (internal) or such earlier date as may be proposed by the Contractor 04/05/15 (external) or such earlier date as may be proposed by the Contractor	15 Business Days after the Finishes Proposal Date

1.3 If any comment is raised on any Submitted Item in accordance with paragraph 3 (*Grounds of Objection*) the ground upon which such comments are based and the evidence or other information necessary to substantiate that ground shall be stated. To the extent that any comment on a Submitted Item is raised other than on the basis set out in this Schedule Part 8 (*Review Procedure*), or the provisions of this paragraph are not complied with, the Contractor may, in its discretion, either:

1.3.1 request written clarification of the basis for such comments and, if clarification is not received within twelve (12) Business Days of such request by the Contractor, refer the matter for determination in accordance with Schedule Part 20 (*Dispute Resolution Procedure*); or

1.3.2 in the case of a Submitted Item comprising Reviewable Design Data only, at its own risk, and without prejudice to Clause 12 (*The Design Construction and Commissioning Process*), proceed with further design or construction disregarding such comments pending the outcome of any reference to the Dispute Resolution Procedure that may be made by either party.

1.4 [Not Used].

2. Further Information

The Contractor shall submit any further or other information, data and documents that the Project Co's Representative reasonably requires in order to determine whether he has a basis for raising comments or making objections to any Submitted Item in accordance with this Schedule Part 8 (*Review Procedure*). If the Contractor does not submit any such information, data and documents, the Project Co's Representative shall be entitled to:

2.1 comment on the Submitted Item on the basis of the information, data and documents which have been provided; or

2.2 object to the Submitted Item on the grounds that insufficient information, data and documents have been provided to enable the Project Co's Representative to determine whether he has a legitimate basis for commenting or objecting in accordance with this Schedule Part 8 (*Review Procedure*).

2.3 Without limiting the foregoing the Contractor acknowledges and agrees that the Project Co shall be acting reasonably in requiring further or other information, data and documents where the Board Representative requests further or other information, data or documents under the equivalent provision in the Project Agreement.

3. Grounds of Objection

The expression "raise comments" in this paragraph shall be construed to mean "raise comments or make objections" and additionally in the case of any Programme submitted by the Contractor under Clause 14.4.1 or 14.4.2, it shall be construed to mean "raise comments, make objections and/or reject", unless the contrary appears from the context. The Project Co's Representative may raise comments in relation to any Submitted Item on the grounds set out in paragraph 2 (*Further Information*) above or on the ground that the Submitted Item would (on the balance of probabilities) breach any Law but otherwise may raise comments in relation to a Submitted Item only as follows:

3.1 in relation to any Submitted Item if:

3.1.1 the Contractor's ability to perform its obligations under this Agreement would (on the balance of probabilities) be adversely affected by the implementation of the Submitted Item; or

3.1.2 the implementation of the Submitted Item would (on the balance of probabilities) adversely affect any right of the Project Co under this Agreement or its ability to enforce any such right;

3.1.3 any aspect of a Submitted Item does not comply with or is not in accordance with or breaches Schedule Part 31 *(Consort Interface with Campus Site and/or Campus Facilities)* of the Project Agreement and/or the Interface Proposals;

3.1.4 the Board's Representative has raised comments under the equivalent provision in the Project Agreement and the Contractor shall treat each such comment of the Board's Representative as if it had been made by the Project Co's Representative.

3.2 in relation to any Submitted Item submitted pursuant to Clause 4.1 (*Ancillary Documents*) if:

3.2.1 the Project Co's ability to perform its obligations under this Agreement would be adversely affected by the proposed course of action;

3.2.2 the Board's ability to provide the relevant Board Services or to carry out any of its statutory functions would (on the balance of probabilities) be adversely affected by the course of action;

3.2.3 the proposed course of action would be likely to result in an increase to the Project Co's liabilities or potential or contingent liabilities under this Agreement;

3.2.4 the proposed course of action would adversely affect any right of the Project Co `under this Agreement or its ability to enforce any such right;

3.2.5 the Board's Representative has raised comments under the equivalent provision in the Project Agreement and the Contractor shall treat each such comment of the Board's Representative as if it had been made by the Project Co's Representative; or

3.2.6 the Contractor's ability to perform its obligations under this Agreement would be materially adversely affected by the proposed course of action;

3.3 in relation to Reviewable Design Data submitted pursuant to Clause 12.6:

3.3.1 which does not comprise 1:50 scale Room Layout Drawings the Project Co's Representative may raise comments, subject to and in accordance with paragraph 4 (*Effect of Review*) on the ground that the Submitted Item is not in accordance with:

(a) the Board's Construction Requirements; and/or

(b) Project Co's Proposals;

3.3.2 which comprises a 1:50 scale Room Layout Drawing in respect of which there is a corresponding generic 1:50 scale Room Layout Drawing for the relevant room type (which has previously been reviewed and commented upon by Project Co's Representative in accordance with this Schedule Part 8 (*Review Procedure*)), the Project Co's Representative may raise comments including the comments it has received form the Board's Representative, subject to and in accordance with paragraph 4 *(Effect of Review)*, on the ground that the Submitted Item does not conform to the generic 1:50 scale Room Layout Drawing; and

3.3.3 which comprises a 1:50 scale Room Layout Drawing in respect of which there is no corresponding generic 1:50 scale Room Layout Drawing for the relevant room type (which has previously been reviewed and commented upon by Project Co's Representative in accordance with this Schedule Part 8 (*Review Procedure*)), the Project Co's Representative may raise comments including the comments it has received from the Board's Representative, subject to and in accordance with paragraph 4 *(Effect of Review)*, on the grounds that the Submitted Item:

(a) is not in accordance with the Board's Construction Requirements and/or Project Co's Proposals; or

(b) is inconsistent with the guidance contained in any current NHS Requirement which is applicable to a room of that function provided that such guidance has not been superseded by and is not inconsistent with any other provisions of the Board's Construction Requirements (including any existing Approved RDD Item);

3.3.4 on the grounds that the Submitted Item is not in accordance with or breaches Schedule Part 31 *(Consort Interface with Campus Site and/or Campus Facilities)* of the Project Agreement and/or the relevant Interface Proposals;

3.4 in relation to a proposal to amend Project Co's Proposals and rectify (part of) the Works submitted pursuant to Clause 12.8, on the grounds that, following the amendment and rectification proposed:

3.4.1 Project Co's Proposals would not satisfy the Board's Construction Requirements; and/or

3.4.2 the structural, mechanical and/or electrical performance of the Facilities and/or the Retained Estate Handback Infrastructure would not be of an equivalent standard of performance to that set out in Project Co's Proposals prior to their amendment or rectification (for the purpose of this comparison disregarding the fault which required the amendment or rectification to be made);

3.5 in relation to Finishes:

3.5.1 which have the effect of making a selection from the Range of Finishes (or any alternative range or selection of Finishes submitted by the Contractor to the Project Co's Representative) pursuant to Clause 12.6.1; or

3.5.2 where the Submitted Item does not comply with the relevant provisions of the Board's Construction Requirements and/or Project Co's Proposals;

3.6 in relation to the submission of any revised Programme pursuant to Clause 14 (*Programme and Dates for Completion*) on the ground that the revised Programme would not (on the balance of probabilities) enable the Works to be completed by the Completion Date and/or reflect any timescales set out in the Schedule Part 31 *(Consort Interface with Campus Site and/or Campus Facilities)* of the Project Agreement and/or the Interface Proposals or where in the opinion of Project Co's Representative the revised Programme that has been provided pursuant to Clause 14 will not result in the Actual Completion Date occurring by the Long Stop Date if implemented;

3.7 in relation to the submission of any Quality Plan or part of a Quality Plan or any changes to any Quality Plan pursuant to Clause 20.4 or Clause 20.7 or any quality manual or procedure in accordance with Clause 20.9 (*Quality Manuals and Procedures*), on the grounds that such Quality Plans, or parts of or changes to such

Quality Plans, quality manuals or procedures, or the quality management systems which they reflect, would not comply with:

3.7.1 in the case of the Design Quality Plan and the Construction Quality Plan referred to in Clause 20.8, the requirements referred to in Section 8 (*Quality Plans (Design and Construction)*) of Schedule Part 6 (*Construction Matters*); and

3.7.2 [Not Used]

3.8 [Not Used]

3.9 [Not Used]

3.10 [Not Used]

3.11 [Not Used]

4. Effect of Review

4.1 Any Submitted Item which is returned or deemed to have been returned by Project Co's Representative endorsed "no comment" (and in the case of Reviewable Design Data, endorsed "Level A - no comment") shall be complied with or implemented (as the case may be) by the Contractor.

4.2 In the case of any Submitted Item other than Reviewable Design Data, if the Project Co notifies the Contractor that the Project Co has comments on the Submitted Item the Contractor shall, subject to receipt by the Contractor of the comments of Project Co's Representative comply with such Submitted Item after amendment in accordance with the comments of the Project Co's Representative. If the Project Co notifies the Contractor that the Board's Representative has returned the Submitted Item to Project Co endorsed "comments", the Contractor shall subject to receipt by the Contractor of the comments of the Board's Representative comply with such Submitted Item after amendment in accordance with the comments of the Board's Representative unless Project Co notifies the Contractor that Project Co is disputing the power of the Board Representative to make the comment in accordance with the Project Agreement. Where the Project Co so notifies the Contractor, the Contractor shall not act on the Submitted Item until the Project Co informs the Contractor of the outcome of the dispute raised by Project Co. Where the Project Co notifies the Contractor that the dispute has been agreed, or resolved, on the basis that the Board Representative's comment was made on grounds permitted by the Project Agreement, the Contractor shall comply with the Submitted Item after amendment in accordance with the comments of the Board's Representative..

4.3 In the case of a Submitted Item comprising Reviewable Design Data, if the Project Co notifies the Contractor that the Board's Representative has returned the Submitted Item endorsed other than "Level A - no comment", the Contractor shall subject to receipt by the Contractor of the relevant Submitted Item endorsed by the Board's Representative:

4.3.1 where the Board's Representative has endorsed the Submitted Item "Level B - proceed subject to amendment as noted", either proceed to construct or proceed to the next level of design of the part of the Works to which the Submitted Item relates but take into account any amendments required by the Board's Representative in his comments;

4.3.2 where the Board's Representative has endorsed the Submitted Item "Level C - subject to amendment as noted" not act upon the Submitted Item, amend the Submitted Item in accordance with the Board's Representative's

comments and re-submit the same to the Board's Representative on behalf of the Project Co in accordance with paragraph 4.4; and

4.3.3 where the Board's Representative has endorsed the Submitted Item "Level D - rejected" not act upon the Submitted Item, amend the Submitted Item and re-submit the Submitted Item to the Board's Representative on behalf of the Project Co in accordance with paragraph 4.4,

unless Project Co notifies the Contractor that Project Co is disputing the such comment or proposed amendment on grounds permitted by the Project Agreement, in which case (a) the Contractor shall not act on the Submitted Item until the Project Co informs the Contractor of the outcome of the dispute raised by Project Co . Where the Project Co notifies the Contractor that the dispute has been agreed, or resolved, on the basis that the Board's Representative's comment or proposed amendment was made on grounds permitted by the Project Agreement, the Contractor shall comply with the relevant Submitted Item in accordance with the comment or proposed amendment or (b) the Contractor may act on the Submitted Item at its own risk in accordance with paragraph 1.3.2.

4.3A Where the Project Co Representative returns any Submitted Item comprising Reviewable Design Data endorsed with comments listed in paragraph 4.3.1-4.3.3 the Contractor shall proceed in the manner listed in paragraph 4.3.1-4.3.3 save that the reference to the Board's Representative shall be read as being a reference to the Project Co's Representative.

4.4 Within seven (7) Business Days of receiving the comments of the Project Co's Representative or the Board's Representative (as the case may be) on any Submitted Item comprising Reviewable Design Data, the Contractor shall (except in the case contemplated in paragraph 4.3.1) send a copy of the Submitted Item as amended to the Project Co Representative where the Contractor is responding to the comments made by Project Co, or to the Board's Representative on behalf of the Project Co pursuant to paragraph 4.3 and the provisions of paragraphs 1.2.1, 4.1, 4.3 and 4.3A shall apply (changed according to context) to such re-submission.

4.5 The return or deemed return of any Submitted Item endorsed "no comment" (or in the case of Reviewable Design Data endorsed "Level A - no comment" or otherwise endorsed in accordance with paragraph 4.3.1 or 4.3.2) shall mean that the relevant Submitted Item may be used or implemented for the purposes for which it is intended but, save to the extent expressly stated in this Agreement including, without limitation, as specified in Appendix 1 Table A to this Schedule Part 8 (*Review Procedure*), such return or deemed return of any Submitted Item shall not otherwise relieve the Contractor of its obligations under this Agreement nor is it an acknowledgement that the Contractor has complied with such obligations.

4.6 [Not Used]

5. DOCUMENTATION MANAGEMENT

5.1 The Contractor shall issue three (3) copies of all Submitted Items to Project Co and compile and maintain a register of the date and contents of the submission of all Submitted Items.

5.2 The Contractor shall compile and maintain a register of the date of receipt and content of all Submitted Items that are returned or deemed to be returned by Project Co's Representative.

5.3 Save to the extent set out in Appendix 1, Table A to this Schedule Part 8 (*Review Procedure*) or elsewhere in this Schedule Part 8 (*Review Procedure*), no review, comment or approval by the Board or Project Co shall operate to exclude or limit the

Contractor's obligations or liabilities under this Agreement (or the Project Co's rights under this Agreement).

5.4 [Not Used].

6. CHANGES

6.1 No approval or comment or any failure to give or make an approval or comment under this Schedule Part 8 (*Review Procedure*) shall constitute a Change save to the extent provided in this Schedule Part 8 (*Review Procedure*).

6.2 If, having received the Board's Representative's comments, the Contractor considers that compliance with those comments would amount to a Change, the Contractor shall, before complying with the comments, notify the Project Co of the same and, shall await the outcome of discussions, or dispute resolution under the Project Agreement, between the Project Co and the Board as to whether a Change under the Project Agreement would arise if the comments were complied with. Any failure by Contractor to notify the Project Co that it considers compliance with any comments of the Board's Representative would amount to a Change shall constitute an irrevocable acceptance by the Contractor that there shall be no adjustment to the Contract Sum nor shall there be any extension of time for compliance with the Board's comments.

6.3 No alteration or modification to the design, quality and quantity of the Works arising from the development of detailed design or from the co-ordination of the design shall be construed or regarded as a Change.

APPENDIX 1

TABLE A

Approved RDD Item (by category)	**Scale**	**Meaning of "Level A - no comment" and "Level B – proceed subject to amendment as noted" endorsement of Reviewable Design Data under Schedule Part 8 (*Review Procedure*) (including both the actual and deemed endorsement).**
Room Data Sheets	n/a	A "Level A - no comment" endorsement or a "Level B - proceed subject to amendment as noted" endorsement of any room data sheet means that the Contractor may proceed to construct in accordance with the Submitted Item and that under the Project Agreement the Board is satisfied that the design and other information in the relevant room data sheet satisfies Operational Functionality.
Drawings – Development Control Plan	1:1250	A "Level A - no comment" endorsement or a "Level B - proceed subject to amendment as noted" endorsement of any 1:1250 scale development control plan means that the Contractor may proceed to construct in accordance with the Submitted Item and that under the Project Agreement the Board is satisfied that the design and other information contained in the relevant drawing satisfies Operational Functionality.
Drawings – Site Plan	1:500	A "Level A - no comment" endorsement or a "Level B - proceed subject to amendment as noted" endorsement of any 1:500 scale site plan means that the Contractor may proceed to construct in accordance with the Submitted Item and that under the Project Agreement the Board is satisfied that the design and other information contained in the relevant drawing satisfies Operational Functionality.
Drawings – Floor Plans	1:200	A "Level A - no comment" endorsement or a "Level B - proceed subject to amendment as noted" endorsement of any 1:200 scale floor plan means that the Contractor may proceed to construct in accordance with the Submitted Item and that under the Project Agreement the Board is satisfied that the design and other information contained in the relevant drawing satisfies the Operational Functionality.
Drawings – Room Layouts (including room elevations) & Reflected ceiling plans	1:50	A "Level A - no comment" endorsement or a "Level B - proceed subject to amendment as noted" endorsement of any 1:50 scale room layout and/or reflected ceiling drawing means that the Contractor may proceed to construct in accordance with the Submitted Item and that under the Project Agreement the Board is satisfied (to the extent of the design and other information contained in the relevant drawing) that the design and other information in the relevant drawing satisfies Operational Functionality.

Drawings – Departmental plans	1:50	A "Level A - no comment" endorsement or a "Level B – proceed subject to amendment as noted" endorsement of any 1:50 scale departmental plan means that the Contractor may proceed to construct in accordance with the Submitted Item and that under the Project Agreement the Board is satisfied (to the extent of the design and other information contained in the relevant drawing) that the design and other information in the relevant drawing satisfies Operational Functionality.

APPENDIX 2

[NOT USED]

SCHEDULE PART 9

COLLATERAL AGREEMENTS WITH THE BOARD, PROJECT CO AND THE SECURITY TRUSTEE (CONTRACTOR / KEY SUBCONTRACTORS)

SECTION 1

CONTRACTOR'S COLLATERAL AGREEMENT WITH THE BOARD

COLLATERAL WARRANTY

AMONG:

(1) **LOTHIAN HEALTH BOARD**, a health board constituted in Scotland under the National Health Service (Constitution of Health Boards) (Scotland) Order 1974 (S.I. 1974/267) as amended by the National Health Service (Constitution of Health Boards) (Scotland) Amendment Order 2003 (S.S.I. 2003/217) pursuant to Section 2 of the National Health Service (Scotland) Act 1978 as amended by section 28 of the National Health Service and Community Care Act 1990 and having its principal address at Waverley Gate, 2-4 Waterloo Place, Edinburgh EH1 3EG (the **"Board"**);

(2) **BROOKFIELD MULTIPLEX CONSTRUCTION EUROPE LIMITED** (registered under number 03808946) whose registered office is at 99 Bishopsgate, Second Floor, London, EC2M 3XD (the **"Contractor"**);

(3) **IHS LOTHIAN LIMITED** (registered under number SC493676) whose registered office is at Burness Paull LLP, 50 Lothian Road, Edinburgh EH3 9WJ (**"Project Co"**);

(4) **PRUDENTIAL TRUSTEE COMPANY LIMITED** as agent and trustee for and on behalf of the Secured Creditors (the **"Security Trustee"**); and

(5) **M&G INVESTMENT MANAGEMENT LIMITED** as agent for and on behalf of the European Investment Bank, The Prudential Assurance Company Limited, Prudential Retirement Income Limited, Hold Co and Top Co (the **Intercreditor Agent**").

WHEREAS:

(A) The Board and Project Co have agreed the terms on which Project Co will design, develop and construct and provide certain services in connection with the reprovision of services from the Royal Hospital for Sick Children, Child and Adolescent Mental Health Service and the Department of Clinical Neurosciences in a single building adjoining the Royal Infirmary of Edinburgh at Little France (the **"Development"**) at the Site and Off-Site (as such expressions are defined in the Project Agreement) and, accordingly, have entered into the Project Agreement and the Project Documents.

(B) Project Co has entered into the Senior Funding Agreements, (as defined in the Project Agreement) with the Funders.

(C) The Contractor and Project Co have entered into an agreement (the **"Construction Contract"**) of even date herewith relating to the provision of the Works (as defined in the Project Agreement) by the Contractor to enable Project Co to discharge its obligations to the Board regarding such Works under the Project Agreement and the Project Documents.

(D) This Contractor's Collateral Agreement (the **"Agreement"**) is the Contractor's Collateral Agreement contemplated by the Project Agreement.

NOW IT IS HEREBY AGREED as follows:

1 DEFINITIONS AND INTERPRETATION

1.1 Definitions

In this Agreement, the following terms shall, unless the context otherwise requires, have the following meanings:

"Ancillary Documents"	has the meaning given in the Project Agreement;
"Business Day"	means a day other than a Saturday, Sunday or a bank holiday in Scotland;
"Construction Contract"	has the meaning given in the Project Agreement;
"Event of Project Co Default"	has the meaning given in the Construction Contract;
"Funders"	means the Senior Lenders and the Senior Subordinated Lenders, as such terms are defined respectively in the Common Terms Agreement;
"Funders' Contractor Direct Agreement"	means the agreement of even date herewith between, amongst others, Project Co, the Contractor and the Funder;
"Funders' Direct Agreement"	is the agreement of even date herewith between, amongst others, the Board, Project Co, and the Funder;
"Novation Agreement"	has the meaning given in Clause 4.5.3(b);
"Novation Effective Date"	means the date of performance of the obligations set out in Clause 4 (*Novation*);
"Parent Company Guarantee"	has the meaning given in the Construction Contract;
"Project Agreement"	means the project agreement of even date herewith between (1) the Board and (2) Project Co;
"Proposed Novation Date"	has the meaning given in Clause 4.1 (*Proposed Substitute*);
"Proposed Novation Notice"	has the meaning given in Clause 4.1 (*Proposed Substitute*);
"Proposed Step-in Date"	has the meaning given in Clause 3.1 (*Step-in Notice*);
"Proposed Substitute"	has the meaning given in Clause 4.1 (*Proposed Substitute*);

"Secured Creditors"	has the meaning given to it in the Intercreditor Agreement;
"Security Documents"	has the meaning given in the Funders' Direct Agreement;
"Senior Funding Agreements"	has the meaning given in the Project Agreement;
"Step-in Date"	means the date of issue of the Step-in Undertaking;
"Step-in Notice"	has the meaning given in Clause 3.1 (*Step-in Notice*);
"Step-in Period"	means the period commencing on the Step-in Date and ending on the earliest of: (a) the date of the first anniversary of the Step-in Date (but subject always to Clause 4.7 (*Extension of Step-in Period*)); (b) the Step-out Date; (c) the Novation Effective Date; and (d) termination of the Construction Contract under Clause 3.3 (*Restriction of Right of Termination*);
"Step-in Undertaking"	has the meaning given in Clause 3.2.4 (*Notice of Obligation and Step-in Undertaking*);
"Step-out Date"	has the meaning given in Clause 3.4.1 (*Step-Out*Step-Out);
"Termination Notice"	has the meaning given in Clause 2.3 (*Termination Notice*).

1.2 Interpretation

Save to the extent that the context or the express provisions of this Agreement otherwise require:

1.2.1 headings and sub-headings are for ease of reference only and shall not be taken into consideration in the interpretation or construction of this Agreement;

1.2.2 all references to Clauses are references to Clauses of this Agreement;

1.2.3 all references to agreements, documents or other instruments include (subject to all relevant approvals) a reference to that agreement, document or instrument as amended, supplemented, substituted, novated or assigned from time to time;

1.2.4 all references to any statute or statutory provision shall include references to any statute or statutory provision which amends, extends, consolidates or replaces the same or which has been amended, extended, consolidated or replaced by the same and shall include any orders, regulations, codes of practice, instruments or other subordinate legislation made under the relevant statute or statutory provision;

1.2.5 any reference to time of day shall be a reference to Edinburgh time;

1.2.6 the words "herein", "hereto" and "hereunder" refer to this Agreement as a whole and not to the particular Clause in which such word may be used;

1.2.7 words importing the singular include the plural and vice versa;

1.2.8 words importing a particular gender include all genders;

1.2.9 "person" includes any individual, partnership, firm, trust, body corporate, government, governmental body, authority, agency, unincorporated body of persons or association;

1.2.10 any reference to a public organisation shall be deemed to include a reference to any successor to such public organisation or any organisation or entity which has taken over the functions or responsibilities of such public organisation;

1.2.11 references to "Party" means a party to this Agreement and references to "Parties" shall be construed accordingly;

1.2.12 all monetary amounts are expressed in pounds sterling;

1.2.13 references to the word "includes" or "including" are to be construed without limitation;

1.2.14 the obligations of any Party under this Agreement are to be performed at that Party's own cost and expense;

1.2.15 terms used in this Agreement that are defined in the Project Agreement or the Ancillary Documents shall have the meanings given to them in the Project Agreement or the Ancillary Documents, as appropriate.

2 TERMINATION NOTICE AND BOARD TERMINATION

2.1 Contractor's Warranties and Undertakings

The Contractor warrants and undertakes to the Board that it has complied with and fulfilled and shall continue to comply with and fulfil its duties and obligations arising under or by virtue of the Construction Contract, provided that the Board shall only be entitled to make a claim against the Contractor under this Clause 2.1 (*Contractor's Warranties and Undertakings*) if the Project Agreement has terminated and shall not be entitled to do so during the Step-in Period or after the Construction Contract has been novated under Clause 4 (*Novation*).

2.2 Liability of Contractor

Any liability arising from any claim for breach of the warranty under or pursuant to Clause 2.1 (*Contractor's Warranties and Undertakings*) shall be in addition to and without prejudice to any other present or future liability of the Contractor to the Board (including, without prejudice to the generality of the foregoing, any liability in negligence) and shall not be released, diminished or in any other way be affected by

any independent enquiry into any relevant matter which may be made or carried out by or on behalf of the Board by any person nor by any action or omission of any person whether or not such action or omission might give rise to an independent liability of such person to the Board provided always that the Contractor shall owe no greater duties or obligations to the Board under this Agreement than it owes or would have owed to Project Co under the Construction Contract. Without prejudice to Clause 12 (*Aggregate Liability*), the Contractor shall be entitled in any action or proceedings brought by the Board under this Agreement to rely on any limitation or exclusion of liability in the Construction Contract and to raise equivalent rights in defence of liability (but excluding retention, set-offs and counterclaims) as it would have against Project Co under the Construction Contract.

2.3 Termination Notice

2.3.1 The Contractor undertakes not to terminate the Construction Contract on account of an Event of Project Co Default without first giving the Board not less than twenty (20) Business Days' prior written notice specifying the grounds for that termination. Subject to Clause 2.3.2 below any such notice shall be a "**Termination Notice**".

2.3.2 Where the Contractor's right to terminate is subject to the terms of the Funders' Contractor Direct Agreement then the Contractor shall notify the Board of the same as soon as reasonably practicable upon becoming aware of the provisions of the Funders' Contractor Direct Agreement applying. Thereafter as soon as the Contractor becomes entitled to terminate the Construction Contract free from the constraints contained in the Funders' Contractor Direct Agreement, whether upon the expiry of the Step-in Period (as such term is defined in the Funders' Direct Agreement) or otherwise, then the Contractor undertakes to the Board not to terminate the Construction Contract on account of an Event of Project Co Default (whether occurring before or after the Contractor's right to terminate the Construction Contract was free from the constraints of the Funders' Contractor Direct Agreement) without first giving the Board not less than twenty (20) Business Days' prior notice specifying the grounds for that termination and noting that the Contractor's right of termination is not subject to the Funders' Contractor Direct Agreement. Any such notice, other than one given in circumstances where there is no default under the Construction Contract by Project Co or the Contractor, shall for the purposes of this Agreement also be a Termination Notice and the provisions of this Agreement shall apply accordingly.

2.3.3 Notwithstanding any provision of the Construction Contract to the contrary, and subject to the exercise by the Board of its rights under paragraph 3 (*Step-In and Step-Out*) of this Agreement, the parties agree that following termination of the Project Agreement the Construction Contract shall come to an end.

2.3.4 The Board acknowledges that it shall not be entitled to exercise its rights under Clauses 3 (*Step-In and Step-Out*) and 4 (*Novation*) where the event giving rise to termination of the Project Agreement is a Contractor Event of Default (as that term is defined in the Construction Contract) whether or not at the relevant time there has been notice to terminate the Construction Contract for such Contractor Event of Default.

3 STEP-IN AND STEP-OUT

3.1 Step-in Notice

3.1.1 If the Board has terminated the Project Agreement in accordance with the terms of the Project Agreement or if the Board has received a Termination

Notice, then subject to the provisions of this Agreement, the Board may give written notice to the Contractor (copied to the Security Trustee and Intercreditor Agent) (a "**Step-in Notice**") of the intention of the Board to issue a Step-in Undertaking on a specified date (the "**Proposed Step-in Date**") provided that such Proposed Step-in Date shall be:

(a) no later than five (5) Business Days after termination of the Project Agreement where this has been terminated by the Board; and

(b) no earlier than the date falling five (5) Business Days prior to the date of expiry of the Termination Notice and no later than the date of expiry of the Termination Notice where a Termination Notice has been given by the Contractor.

3.1.2 Unless the Contractor otherwise consents, only one Step-in Notice may be given during the period of this Agreement. Subject to Clause 5.1 (*Rights of Termination*) below, the Contractor shall not be entitled to terminate the Construction Contract until after the Proposed Step-in Date.

3.2 Notice of Obligation and Step-in Undertaking

3.2.1 Within three (3) Business Days of receipt of any Step-in Notice, the Contractor shall give written notice to the Board of any sums of which the Contractor has actual knowledge which are due and payable but unpaid by Project Co and of any other material obligations or liabilities, of which the Contractor has actual knowledge, which should have been performed or discharged by Project Co under the Construction Contract, in each case, as at the date of the Step-in Notice.

3.2.2 The Contractor shall inform the Board in writing as soon as reasonably practicable of:

(a) any change in such sums, obligations or liabilities referred to in Clause 3.2.1; and

(b) any further sums, obligations or liabilities thereafter falling due and payable but unpaid or falling due for performance or discharge and unperformed or undischarged (as the case may be);

in each case of which the Contractor has actual knowledge, before the Step-in Date.

3.2.3 The Contractor shall give the Board the information referred to in Clauses 3.2.1 and 3.2.2 in good faith and may not give any further notifications pursuant to Clause 3.2.2 less than two (2) Business Days prior to the Proposed Step-in Date. The Board shall not be required to assume any liability under a Step-in Undertaking for any outstanding obligations or liabilities of Project Co to the Contractor which are not notified to the Board pursuant to Clauses 3.2.1 or 3.2.2.

3.2.4 Not later than the Proposed Step-in Date the Board shall decide if it is prepared to issue a Step-in Undertaking. If it does so decide, the Board shall promptly give the Contractor written notification of such decision and, at the same time, provide a copy of such notification to the Security Trustee and Intercreditor Agent. The Board shall deliver to the Contractor on the Proposed Step-in Date, a written undertaking in form and substance agreed with the Contractor (both the Board and the Contractor acting reasonably) (the "**Step in Undertaking**"), incorporating a clause in terms similar to Clause 11 (but only to the extent that there will not be double counting of

default interest accruing under the Construction Contract and this Agreement), and undertaking to the Contractor:

(a) to pay or procure the payment to the Contractor, within twenty (20) Business Days of demand by the Contractor, of any sum due and payable but unpaid by Project Co to the Contractor under the Construction Contract before the Step-in Date and which has been notified by the Contractor to the Board in accordance with Clause 3.2.1 or 3.2.2;

(b) to perform or discharge or procure the performance or discharge of any unperformed or undischarged obligations of Project Co under the Construction Contract which shall have fallen due for performance or discharge before the Step-in Date and which have been notified by the Contractor to the Board in accordance with Clause 3.2.1 or 3.2.2 within such period as the Contractor may reasonably require;

(c) to pay or procure the payment of any sum due and payable by Project Co under the Construction Contract as a result of any act or omission occurring during the Step-in Period which shall arise from any act or omission occurring after the Step-in Date (but subject to Clauses 3.4 and 4.5.3(b)) but not, to avoid doubt, any sum due in respect of any Works carried out before the Step-in Date; and

(d) to perform or discharge or procure the performance or discharge of any obligations of Project Co under the Construction Contract as a result of any act or omission occurring during the Step-in Period which shall arise from any act or omission occurring after the Step-in Date (but subject to Clauses 3.4 (Step-Out) and 4.5.3(b)) but not, to avoid doubt, to perform or discharge or to procure the performance or discharge of any obligations in respect of any Works carried before the Step-in Date.

3.2.5 Following notification of the Board's decision pursuant to Clause 3.2.4, the Security Trustee and Intercreditor Agent shall, on or before the Proposed Step-in Date, take any action which is necessary unconditionally and irrevocably to release the Construction Contract and the Parent Company Guarantee from the security constituted by the Security Documents.

3.2.6 Upon release by the Security Trustee and Intercreditor Agent of its security over the Parent Company Guarantee in accordance with Clause 3.2.5, Project Co shall immediately assign all its rights and powers under the Parent Company Guarantee to the Board in accordance with Clause 16 of the same.

3.2.7 If the Board shall not have issued the Step-in Undertaking on or before the Proposed Step-in Date the Step-in Notice shall be deemed to have been withdrawn and the rights and obligations of the Parties shall be construed as if the Step-in Notice had not been given.

3.3 Restriction of Right of Termination

During or in respect of the Step-in Period, the Contractor confirms to the Board that it shall continue to observe and perform its duties and obligations under the Construction Contract and shall, without prejudice to Clause 5.1 (*Rights of Termination*), only be entitled to exercise its rights of termination under the Construction Contract:

3.3.1 by reference to an Event of Project Co Default arising during the Step-in Period provided that no event of default by Project Co under the Project Agreement (whether resulting in termination of the Project Agreement or

otherwise, and notwithstanding that it has occurred during the Step-in Period) shall entitle the Contractor to exercise such rights of termination during the Step-in Period; or

3.3.2 if the Board, in breach of the terms of the Construction Contract, fails to pay when due any amount owed to the Contractor or fails to perform or discharge when falling due for performance or discharge any obligation under the Step-in Undertaking or fails to procure such payment or performance or discharge; or

3.3.3 if such rights of termination arise in circumstances where there is no default under the Construction Contract by the Board or the Contractor.

3.4 Step-Out

3.4.1 the Board may, at any time, give the Contractor at least twenty (20) days' prior written notice to terminate the Step-in Period on a date specified in the notice (the "**Step-out Date**");

3.4.2 the Board shall give the Contractor at least twenty (20) days' prior written notice that (subject to Clause 4.4.2) the Step-in Period will end due to the occurrence (subject to Clause 4.7 (*Extension of Step-in Period*) of the first anniversary of the Step-in Date;

provided that:

(a) the Board has performed and discharged in full or procured the performance and discharge in full of any obligations of Project Co under the Construction Contract in relation to the maintenance of records and the provision of reports during the Step-in Period so as to permit the Contractor to monitor the performance of Project Co's other obligations under the Construction Contract; and

(b) all liability under the Step-in Undertaking pursuant to any claims made up to the date specified in either Clause 3.4.1 or Clause 3.4.2 (as the case may be) shall have been fully and unconditionally discharged,

the Board shall be released from the Step-in Undertaking on the expiry of the Step-in Period in accordance with Clauses 3.4.1 and 3.4.2. Such release shall not affect the continuation of Project Co's obligations towards the Contractor under the Construction Contract.

4 NOVATION

4.1 Proposed Substitute

At any time that the Board is entitled to give a Step-in Notice pursuant to Clause 3.1 (*Step-in Notice*) or at any time during the Step-in Period the Board may give notice (copied to the Security Trustee and Intercreditor Agent) (a "**Proposed Novation Notice**") to the Contractor that it wishes itself or another person (a "**Proposed Substitute**") to assume, by way of sale, transfer or other disposal, the rights and obligations of Project Co under the Construction Contract and specifying a date (the "**Proposed Novation Date**"):

4.1.1 falling not later than fifteen (15) Business Days after termination of the Project Agreement where this has been terminated by the Board;

4.1.2 falling not later than the expiry of the Termination Notice where a Proposed Novation Notice is given by the Board at a time when it is entitled to give a Step-in Notice pursuant to Clause 3.1 (*Step-in Notice*); and

4.1.3 falling not later than twenty-eight (28) Business Days after the date of the Proposed Novation Notice, where a Proposed Novation Notice is given during a Step-in Period.

Save as provided in Clause 4.4 (*Consent Withheld*), only one Proposed Novation Notice may be given during the period of this Agreement. Without prejudice to Clauses 3.3 (*Restriction of Right of Termination*) and 5.1 (*Rights of Termination*), the Contractor shall not be entitled to terminate the Construction Contract during the notice period specified in a Proposed Novation Notice.

4.2 Information for Consent to Novation

If the Proposed Novation Notice specifies the Board as the Proposed Substitute, the Contractor's consent to the novation shall be deemed to have been given automatically. Where the Proposed Substitute is not the Board, a novation in accordance with a Proposed Novation Notice shall only be effective if the Contractor consents to that novation in writing in accordance with Clause 4.3 *(Grant of Consent)* and the Board shall (as soon as practicable) supply the Contractor with the following information (copied to the Security Trustee and Intercreditor Agent):

4.2.1 the name and registered address of the Proposed Substitute;

4.2.2 the names of the shareholders in the Proposed Substitute and the share capital owned by each of them;

4.2.3 the names of the directors and the secretary of the Proposed Substitute;

4.2.4 details of the means by which it is proposed to finance the Proposed Substitute (including the extent to which such finance is committed and any conditions precedent as to its availability for drawing); and

4.2.5 the resources (including contractual arrangements) which are to be available to the Proposed Substitute to enable it to perform its obligations under the Construction Contract.

4.3 Grant of Consent

The Contractor may withhold or delay consent to a novation only where the Proposed Substitute is not the Board and the Board has failed to show to the Contractor's satisfaction (acting reasonably) that:

4.3.1 the Proposed Substitute has the legal capacity, power and authorisation to become a party to and perform the obligations of Project Co under the Construction Contract; and

4.3.2 the technical competence and financial standing of and the technical and financial resources available to the Proposed Substitute are sufficient to perform the obligations of Project Co under the Construction Contract.

The Contractor shall notify the Board in writing, within five (5) Business Days of the later of receipt of a Proposed Novation Notice and all information required under Clause 4.2 (*Information for Consent to Novation*), as to whether or not it has decided to grant such consent (together with an explanation of its reasons if it has decided to withhold its consent).

4.4 Consent Withheld

If, in accordance with Clause 4.3 *(Grant of Consent)*, the Contractor withholds its consent to a Proposed Novation Notice, the Board shall be entitled to give one or more subsequent Proposed Novation Notices, pursuant to the provisions of Clause

4.1 (*Proposed Substitute*), containing changed particulars relating to the same Proposed Substitute or particulars relating to another Proposed Substitute which (where the replacement Proposed Substitute is not the Board) the Board has good cause to believe would fulfil the requirements of Clauses 4.3.1 and 4.3.2, provided that only one Proposed Novation Notice may be outstanding at any one time, and provided further that:

4.4.1 where a Step-in-Notice has not been issued, any revised Proposed Novation Date shall be a date falling no later than the date specified in Clause 4.1.1 or 4.1.2 as appropriate; and

4.4.2 if the Proposed Novation Notice was served during the Step-in Period, any revised Proposed Novation Date shall be a date falling not later than twenty-eight (28) Business Days after the date of the revised Proposed Novation Notice.

4.5 Implementation of Novation

4.5.1 If the Contractor consents to a novation pursuant to a Proposed Novation Notice (whether automatically or otherwise), then on the Proposed Novation Date and without prejudice to Clause 5.1 (*Rights of Termination*),

(a) following notification pursuant to Clause 4.1 (*Proposed Substitute*) and in the absence of any prior release in accordance with Clause 3.2.5, the Security Trustee and Intercreditor Agent shall, on or before the Proposed Novation Date, take any action which is necessary unconditionally and irrevocably to release the Construction Contract and the Parent Company Guarantee from the security constituted by the Security Documents; and

(b) Project Co shall immediately assign all its rights and powers under the Parent Company Guarantee to the Board in accordance with [clause 17] of the same and on the Proposed Novation Date and without prejudice to Clause 5.1 (*Rights of Termination*).

4.5.2 Subject to the prior performance by the Security Trustee and Intercreditor Agent and Project Co of their respective obligations under Clause 4.5.1(a) and Clause 4.5.1(b) the Proposed Substitute shall become a party to the Construction Contract in place of Project Co and, thereafter, shall be treated as if it was and had always been named as a party to the Construction Contract in place of Project Co; and

(a) the Contractor, Project Co and the Proposed Substitute shall enter into a novation agreement (the "**Novation Agreement**") and any other requisite agreements, in form and substance satisfactory to the Contractor (acting reasonably), pursuant to which:

(i) the Proposed Substitute shall be granted all of the rights of Project Co under the Construction Contract (including those arising prior to the end of the Step-in Period);

(ii) subject to the Contractor giving to the Proposed Substitute within three (3) Business Days of receipt of the Proposed Novation Notice such notice as is referred to in Clause 3.2.1 and to the provisions of Clauses 3.2.2 and 3.2.3, mutatis mutandis, the Proposed Substitute shall assume all of the obligations and liabilities of Project Co under the Construction Contract (including those arising prior to the end of any Step-in Period and those arising during the period of the Proposed Novation Notice);

provided that the Contractor will not be in breach of any of its obligations under this Agreement if the Proposed Substitute does not enter into one or other of such agreements.

4.5.3 On and after the Novation Effective Date:

(a) the Contractor shall owe its obligations under the Construction Contract (whether arising before, on or after such date) to the Proposed Substitute and the receipt, acknowledgement or acquiescence of the Proposed Substitute shall be a good discharge; and

(b) if the Board shall have entered into a Step-in Undertaking, the Board will be released from the Step-in Undertaking, provided that:

(i) all obligations of the Board under the Step-in Undertaking which have accrued up to the Novation Effective Date and are identifiable as at that date shall have been fully and unconditionally discharged; and

(ii) the Board has performed and discharged in full or procured the performance and discharge in full of the obligations of Project Co under the Construction Contract in relation to the maintenance of records and the provision of reports during the Step-in Period up to the Novation Effective Date so as to permit the Contractor to monitor the performance of Project Co's other obligations under the Construction Contract.

4.5.4 the Board and the Contractor shall use all reasonable endeavours to agree and the Board shall use reasonable endeavours to procure that the Proposed Substitute agrees any amendments to the Construction Contract necessary to reflect Clause 3.2.2 and the fact that the Project Agreement may have terminated at the time of the Novation Effective Date.

4.6 Termination After Novation

After the Novation Effective Date the Contractor shall only be entitled to exercise its rights of termination under the Construction Contract:

4.6.1 in respect of any Event of Project Co Default arising after that date in accordance with the Construction Contract; or

4.6.2 if the Proposed Substitute does not discharge the obligations and liabilities assumed by it under Clause 4.5.2(a) which relate to matters arising prior to the end of the Step-in Period within fifteen (15) Business Days following the Novation Effective Date.

4.7 Extension of Step-in Period

As at the date of the first anniversary of the Step-in Date, if the Step-in Period has not previously ended, and:

4.7.1 the Board is in the course of conducting discussions in good faith with a Proposed Substitute (the novation to whom has been approved by the Contractor whether automatically or otherwise in accordance with Clause 4.3 *(Grant of Consent)*), the Step-in Period shall be extended and shall continue until such date as is proposed by the Board and agreed by the Contractor; or

4.7.2 a contract has been entered into between the Board and a Proposed Substitute (which has been approved by the Contractor in accordance with Clause 4.3 *(Grant of Consent)*) as at such date,

the Step-in Period shall be extended and shall continue until the date such contract comes into force, provided that such date shall not be later than thirty (30) Business Days after the last date of execution of such contract.

4A GUARANTEE IN RESPECT OF THE CONSTRUCTION CONTRACT

For the avoidance of doubt, the exercise of the Board's rights under Clause 3 *(Step-In and Step-Out)* or 4 *(Novation)* of this Agreement shall for the purposes of the guarantee to Project Co in respect of the Construction Contract be treated as an assignation or novation as contemplated under Clause 17 of such guarantee.

5 RIGHTS AND OBLIGATIONS UNDER THE CONSTRUCTION CONTRACT

5.1 Rights of Termination

If:

5.1.1 no Step-in Notice or Proposed Novation Notice is given before a Termination Notice expires or within twenty (20) Business Days after termination of the Project Agreement by the Board; or

5.1.2 a Step-in Undertaking is not issued on the Proposed Step-in Date; or

5.1.3 the Step-in Notice is withdrawn or, pursuant to Clause 3.2.7, deemed to have been withdrawn; or

5.1.4 the Step-in Period ends before the occurrence of the Novation Effective Date; or

5.1.5 in the absence of a Step-in Undertaking, the Contractor withholds its consent to a novation pursuant to a Proposed Novation Notice, in accordance with Clause 4.3 *(Grant of Consent)*, and does not subsequently grant consent to a novation in accordance with Clause 4.4 (*Consent Withheld*) on or before the Proposed Novation Date; or

5.1.6 in the absence of a Step-in Undertaking, the obligations of the Proposed Substitute set out in Clause 4.5 *(Implementation of Novation)* are not performed on the Proposed Novation Date; or

5.1.7 the Contractor is entitled to terminate the Construction Contract under Clause 3.3 (*Restriction of Right of Termination*) or 4.6 (*Termination After Novation*); or

5.1.8 the Board exercises its right to Step-out under Clause 3.4.1,

the Contractor shall, on and from the Step-out Date, be entitled to:

5.1.9 exercise all of its rights under the Construction Contract and act upon any and all grounds for termination available to it in relation to the Construction Contract whenever occurring; and/or

5.1.10 pursue any and all claims and exercise any and all rights and remedies against Project Co.

5.2 Project Co's Obligations to Continue

Until completion of a novation pursuant to Clause 4.5 (*Implementation of Novation*) (unless the terms of such novation expressly preserve an obligation or liability of Project Co), Project Co shall continue to be liable for all its obligations and liabilities, whenever occurring, under or arising from the Construction Contract notwithstanding:

5.2.1 the service of a Step-in Notice or the issue of a Step-in Undertaking or the expiry of the Step-in Period or the release of a Step-in Undertaking; or

5.2.2 the service of a Proposed Novation Notice; or

5.2.3 any other provision of this Agreement.

6 REVOCATION OF NOTICES

A Termination Notice and a Step-in Notice may each be revoked (in writing to the recipient) by the Party giving them before the expiry of their respective notice periods. Upon any such revocation, the rights and obligations of the Parties shall be construed as if the relevant notice had not been given.

7 ASSIGNATION

7.1 Binding on Successors and Assignees

This Agreement shall be binding on and shall enure to the benefit of the Parties and their respective successors and permitted assignees. In the case of the Board, its successors shall include any person to which the Scottish Ministers, in exercising their statutory powers to transfer property, rights and liabilities of the Board upon the Board ceasing to exist, transfers the rights and obligations of the Board under this Agreement.

7.2 Restriction on Assignation

No Party shall assign or transfer any part of its respective rights or obligations under this Agreement without the prior consent of the others (such consent not to be unreasonably withheld or delayed), provided that:

7.2.1 Project Co shall not assign this Agreement to any party other than a party to whom Project Co's interests in the Project Agreement and Construction Contract are assigned in accordance with the terms of the Project Agreement and Construction Contract respectively;

7.2.2 the Board shall be entitled, without the consent of any other Party, to transfer all its rights and obligations hereunder, to any person to whom it assigns or otherwise disposes of the benefit of the Project Agreement in accordance with Clause 57 (*Assignation and Sub-Contracting*) of the Project Agreement and, otherwise, with Project Co's and the Contractor's consent (not to be unreasonably withheld or delayed);

7.2.3 nothing in this sub-clause shall restrict the rights of the Scottish Ministers to effect a statutory transfer;

7.2.4 the Contractor shall assign this Agreement to any party to whom it assigns the Construction Contract (in accordance with the terms of that agreement).

7.2.5 the Security Trustee and Intercreditor Agent may assign or transfer its rights and obligations to a successor trustee of the Security Trustee and Intercreditor Agent under the Funding Agreement without the consent of any

other Party and this Clause 7.2 shall not prevent any Security Trustee and Intercreditor Agent assigning or transferring its rights under the Senior Funding Agreements and the Security Documents in accordance with the terms of the Senior Funding Agreements.

7.3 No Loss

The Contractor agrees that it shall not at any time assert that any permitted assignee in terms of this Agreement is precluded from recovering any loss resulting from any breach of this Agreement by reason that such assignee is not an original party to this Agreement or that no loss or a different loss has been suffered by such assignee.

8 CONFIDENTIALITY

8.1 The parties shall be bound to observe, mutatis mutandis, the terms of Clause 61 (*Confidentiality*) of the Construction Contract with respect to any information or document referred to in Clause 61 (*Confidentiality*) of the Construction Contract which shall come into its possession pursuant to this Agreement.

8.2 The Contractor agrees that the Board shall be entitled to disclose the terms of this Agreement in accordance with Clause 61 (*Confidentiality*) of the Project Agreement.

9 NOTICES

Any notice given under this Agreement shall be deemed to be duly given if it is delivered by hand or sent by recorded delivery to the party named therein at the address of such party shown in this Agreement or such other address as such party may by notice in writing nominate for the purpose of service and if sent by recorded delivery shall be deemed (subject to proof to the contrary) to have been received forty eight (48) hours after being posted.

10 PAYMENTS AND TAXES

10.1 Payments

All payments under this Agreement to any Party shall be made in pounds sterling by electronic transfer of funds for value on the day in question to the bank account of the recipient (located in the United Kingdom) specified to the other Parties from time to time.

10.2 VAT

10.2.1 All amounts stated to be payable by any Party under this Agreement shall be exclusive of any VAT properly payable in respect of the supplies to which they relate.

10.2.2 Each Party shall pay any VAT properly payable hereunder in respect of any supply made to it under this Agreement, provided that it shall first have received a valid tax invoice in respect of that supply which complies with the requirements of Part III VAT Regulations 1995.

10.3 Deductions from payments

All sums payable by a Party to any other Party under this Agreement shall be paid free and clear of all deductions or withholdings whatsoever in respect of taxation, save as may be required by Law.

11 DEFAULT INTEREST

Each Party shall be entitled, without prejudice to any other right or remedy, to receive interest on any payment not made on the due date calculated from day to day at a rate per annum equal to the Default Interest Rate from the day after the date on which payment was due up to and including the date of payment.

12 AGGREGATE LIABILITY

Notwithstanding any other provision of this Agreement, the Contractor's aggregate liability from time to time under this Agreement and the Construction Contract shall not at any time exceed its maximum liability as stated in the Construction Contract.

13 PROFESSIONAL INDEMNITY INSURANCE

13.1 The Contractor by this Agreement covenants with the Board that it has at its own cost taken out, or procured the taking out of, professional indemnity insurance with reputable insurers carrying on business in the European Union with a limit of indemnity of not less than ten million pounds / (£10,000,000) in the annual aggregate with at least one annual reinstatement, in relation to the Works, provided always that:

13.2 such insurance shall be in place from the commencement of the Works until no less than twelve (12) years after the Actual Completion Date or, if earlier, after the date of termination of the Construction Contract;

13.3 the insurance premiums in respect of the insurance shall at all times be the responsibility of the Contractor;

13.4 if such insurance is not available to the Contractor (and/or design and build contractors engaged in projects of a similar scope, size, nature and complexity as the Contractor) at commercially reasonable rates and terms (excluding any increase in premiums attributable to the actions, omissions, errors or defaults of the Contractor), the Contractor and the Board will meet and the Contractor will outline the steps it intends to take to manage such risks. If the steps proposed by the Contractor are not acceptable to the Board (acting reasonably), the Contractor and the Board shall agree an alternative method of managing such risk.

13.5 The Contractor will, upon request, provide the Board with reasonable evidence that the policy referred to in this Clause 13 (*Professional Indemnity Insurance*) is in full force and effect in accordance with the requirements of this Clause 13 (*Professional Indemnity Insurance*).

14 THIRD PARTY RIGHTS

It is agreed that this Agreement is not intended to, and does not, give to any person who is not a party to this Agreement any rights to enforce any provisions contained herein except for any person to whom the benefit of this Agreement is assigned or transferred in accordance with Clause 7 (*Assignation*).

15 AGENCY

15.1 No Delegation

No provision of this Agreement shall be construed as a delegation by the Board of any of its statutory Board to any other Party.

15.2 No Agency

Save as otherwise provided in this Agreement, no other Party shall be or be deemed to be an agent of the other Parties nor shall any party hold itself out as having Board or power to bind the other parties in any way.

15.3 Independent Contractor

The Parties shall, at all times, be independent contractors and nothing in this Agreement shall be construed as creating any partnership between the Parties or any relationship of employer and employee between the Parties.

16 WHOLE AGREEMENT

16.1 This Agreement (when read together with the Project Agreement, the Construction Contract and the Parent Company Guarantee) supersedes all previous agreements and understandings between the Parties with respect thereto and each of the Parties acknowledges and confirms that it does not enter into this Agreement in reliance on any representation, warranty or other undertaking not fully reflected in the terms of this Agreement.

16.2 Nothing in this Agreement is intended to or shall operate so as to exclude or limit any liability for fraud or fraudulent misrepresentation.

17 WAIVER

Failure by any Party at any time to enforce any provision of this Agreement or to require performance by the other Parties of any provision of this Agreement shall not be construed as a waiver of such provision and shall not affect the validity of this Agreement or any part of it or the right of the relevant Party to enforce any provision in accordance with its terms.

18 SEVERABILITY

If any condition, Clause or provision of this Agreement not being of a fundamental nature, is held to be illegal or unenforceable, the validity or enforceability of the remainder of this Agreement shall not be affected thereby.

19 COSTS AND EXPENSES

Each Party shall be responsible for paying its own costs and expenses incurred in connection with the negotiation, preparation and execution of this Agreement.

20 AMENDMENTS

No amendment to this Agreement shall be binding unless in writing and signed by the duly authorised representatives of the Parties.

21 GOVERNING LAW AND JURISDICTION

21.1 Law

This Agreement shall be governed by and construed in all respects in accordance with Scottish law.

21.2 Jurisdiction

The Parties each submit to the jurisdiction of the Scottish Courts as regards any claim or matter arising in relation to this Agreement.

IN WITNESS WHEREOF these presents consisting of this and the [*Insert number*] preceding pages are executed as follows:-

SIGNED for and on behalf of
LOTHIAN HEALTH BOARD

at

on the day
of 2015

by

.....
Authorised Signatory

..... Full Name

Before this witness

..... Witness

..... Full Name
..... Address

.....

SUBSCRIBED for and on behalf of **BROOKFIELD MULTIPLEX CONSTRUCTION EUROPE LIMITED**

at

On the day of 2015 as follows:-

..... (Director/Authorised Signatory)

..... Full Name

Before this witness: -

Witness .....

Full name .....

Address .....

.....

.....

SIGNED for and on behalf of the said **IHS LOTHIAN LIMITED** acting under a power of attorney.
at

on

by

_____ _____
Print Full Name Attorney

Before this witness

_____ _____

Print Full Name

Address

_____

Signed by
M&G INVESTMENT MANAGEMENT LIMITED

at

on

Acting by its duly
Authorised attorney

....
(Attorney)

Before this witness

....
(Witness)

Address

.....

.....

SECTION 2

[NOT USED]

SECTION 3

KEY SUB-CONTRACTOR COLLATERAL AGREEMENT WITH THE BOARD

COLLATERAL WARRANTY

AMONG:

LOTHIAN HEALTH BOARD, a health board constituted in Scotland under the National Health Service (Constitution of Health Boards) (Scotland) Order 1974 (S.I. 1974/267) as amended by the National Health Service (Constitution of Health Boards) (Scotland) Amendment Order 2003 (S.S.I. 2003/217) pursuant to Section 2 of the National Health Service (Scotland) Act 1978 as amended by section 28 of the National Health Service and Community Care Act 1990 and having its principal address at Waverley Gate, 2-4 Waterloo Place, Edinburgh EH1 3EG (the "**Beneficiary**" which expression shall include its successors in title or permitted assignees under this Agreement and for the Project Agreement and/or the Beneficiary's appointee);

and

BROOKFIELD MULTIPLEX CONSTRUCTION EUROPE LIMITED, a company incorporated in England and Wales under the Companies Acts (Registered Number 03808946) registered office at 99 Bishopsgate, Second Floor, London, EC2M 3XD (the "**Contractor**" which expression shall include its successors in title or permitted assignees under this Agreement).

and

[ ] LIMITED, a company incorporated in [Scotland/England and Wales/Northern Ireland] under the Companies Acts (Registered Number [ ]) and having its Registered Office at [ ] (the "**Subcontractor**").

WHEREAS:

(A) The Beneficiary and IHS Lothian Limited, a company incorporated in Scotland under the companies Act (Registered Number SC493676) and having its Registered Office at 50 Lothian Road, Festival Square, Edinburgh EH3 9WJ ("**Project Co**") have entered into an agreement for the design, build, finance and maintenance of a project to re-provide services from the Royal Hospital for Sick Children, Child and Adolescent Mental Health Service and the Department of Clinical Neurosciences in a single building adjoining the Royal Infirmary of Edinburgh at Little France (the "**Project**") on [●][1] (the "**DBFM Agreement**").

(B) Project Co and the Contractor have entered into a contract (the "**Construction Contract**") on or about the date of the DBFM Agreement for the design and construction of the Project (the "**Contract Works**").

(C) The Contractor has entered or intends to enter into an agreement with the Subcontractor whereby the Subcontractor will provide certain works (the "**Subcontract Works**") in connection with the Project (the "**Subcontract**") as more particularly described in the Subcontract.

(D) It is a condition of the Subcontract that the Subcontractor enters this Agreement with the Beneficiary.

(E) The Beneficiary shall be entitled to rely and is deemed to have relied on the Subcontractor's reasonable skill, care and diligence in respect of all matters covered by this Agreement insofar as they relate to the Subcontract Works provided by the Subcontractor under the Subcontract.

[1] Insert date of signature of the Project Agreement.

NOW IT IS AGREED as follows:

1 WARRANTY AND UNDERTAKING

1.1 The Subcontractor warrants and undertakes to the Beneficiary that it has complied and will continue to comply with all the terms and obligations and duties under or arising out of the Subcontract on the Subcontractor's part to be performed and observed and shall complete the Subcontract Works in accordance with the Subcontract.

1.2 Without prejudice to Clause 1.1 of this Agreement, the Subcontractor further warrants and undertakes to the Beneficiary that:

1.2.1 it has exercised and will continue to exercise all the due skill, care and diligence of a properly qualified and competent subcontractor experienced in providing design of works on projects similar in nature, size and complexity to the Project in:

(a) the design of the Subcontract Works; and

(b) the materials selected or specified by or on its behalf for use in the Subcontract Works (or any part or parts thereof) are in accordance with the guidance contained in the Good Practice Guidance and this Clause 1.2.1(b); and

(c) only materials and goods which are new and of sound and satisfactory quality shall be specified for use in connection with the Subcontract Works; and

(d) there shall not be specified for use in connection with the Subcontract Works any materials or substances which are expressly prohibited by the Subcontract or which are generally known not to be in accordance with British or European Standards and Codes of Practice at the time of specification or use (as applicable), or any materials or substances which are deleterious to health and safety or to the durability of buildings and/or other structures and/or finishes and/or plant and machinery in the particular circumstances in which they are used, or any materials or substances identified as deleterious, unsatisfactory or unsuitable in the relevant circumstances in the Good Practice Guidance and, in addition to and separate from the foregoing, any substances or combination of substances publicised prior to the time of construction in any Building Research Establishment Limited ("BRE") publications issued as part of the BRE Professional development service which the BRE recommend are not used for building purposes or for the type of buildings comprised in the Project; and

(e) the performance of the Subcontract Works to the Contractor under the Subcontract.

For the purposes of Clause 1.2.1, "**Good Practice Guidance**" means the edition of the publication entitles "Good practice in the selection of construction materials" (British Council for Offices (BCO): 2011) or any amended or updated version as at the Commencement Date (as such term is defined in the DBFM Agreement);

1.2.2 the final design and all materials and goods specified therein will correspond as to description, quality and condition with the requirements of the Subcontract; and

1.2.3 the final design will at practical completion or its equivalent under the Subcontract, as the case may be, comply with all relevant legislation and Good Industry Practice.

2 INSURANCE

2.1 The Subcontractor shall maintain throughout the duration of provision of the Subcontract Works and for a period of 12 years after the date of practical completion or its equivalent under the Construction Contract, professional indemnity insurance in an amount of not less than [five] million pounds (£[5,000,000])[2] sterling on an each and every claim basis and for any one occurrence or series of occurrences arising out of any one event with insurers of good repute carrying on business in the European Union provided always that such insurance is available at rates which are commercially reasonable to subcontractors.

2.2 In determining whether or not insurance is available as aforesaid, the financial characteristics and claims' record of the Subcontractor shall be ignored.

2.3 The Subcontractor shall immediately inform the Beneficiary if such insurance ceases to be available at rates which are commercially reasonable in order that the Subcontractor and the Beneficiary can consider alternative means of best protecting their respective positions in respect of the Project in the absence of such insurance provided that the Beneficiary shall be entitled to require the Subcontractor to maintain such lesser amount of Professional Indemnity Insurance as is available to the Subcontractor at rates which are commercially reasonable.

2.4 As and when it is reasonably requested to do so by the Beneficiary the Subcontractor shall produce for inspection documentary evidence satisfactory to the Beneficiary (acting reasonably) that its Professional Indemnity Insurance is being maintained.

2.5 The Subcontractor confirms that this Agreement has been disclosed to and has been approved by the Subcontractor Professional Indemnity Insurers or Underwriters.

2.6 Should the Subcontractor be in breach of any of its obligations under this Clause 2 (*Insurance*), the Beneficiary may itself insure against any risk with respect to which the breach shall have occurred and may recover such sum or sums from the Subcontractor as a debt.

3 COPYRIGHT

3.1 The Subcontractor hereby grants to the Beneficiary or its appointee and all those authorised by the Beneficiary an irrevocable, transferable, non-exclusive and royalty-free licence (which shall be capable of assignation) to use and reproduce all information (whether or not stored in computer systems), drawings, models, bills of quantities, specifications, schedules, details, plans, programmes, budgets, reports, calculations or other documents, work or things including all applicable passwords or access codes whatsoever provided or to be provided by the Subcontractor in connection with the Subcontract Works (the **"Documents"**) for such purposes as the Beneficiary may at its sole discretion require.

3.2 Such licence shall carry the right to grant sub-licences and shall subsist notwithstanding that the Subcontract is terminated or the obligations and duties there

[2] The exact amount shall be an appropriate amount on a case by case tasks having regard to the scope, value and importance of works package.

under have been completed. For the avoidance of doubt, the grant of such licence or sub-licences shall not impose any additional liability on the Subcontractor.

3.3 The Subcontractor shall on reasonable demand provide to the Beneficiary or its appointee and those authorised by the Beneficiary additional copies of any documents on receipt of reasonable copying costs. The Subcontractor will not be liable for any use by the Beneficiary or any appointee or sub-licensee of any of the Documents for any purpose other than that for which the same were prepared and provided by the Subcontractor or for any improper or negligent use by the Beneficiary or any appointee or sub-licensee.

3.4 The Subcontractor agrees to indemnify and keep indemnified the Beneficiary from and against all loss, damage, cost, expense, liability or claim in respect of breach of the copyright or other intellectual property rights of any third party caused by or arising out of the carrying out of the Subcontract Works or the use of the licence.

4 ASSIGNATION

4.1 This Agreement may be assigned or otherwise transferred, novated, in whole or in part by the Beneficiary to any successor to the Beneficiary's interest in the Project or any part thereof without the consent of the Subcontractor being required and such assignation shall be effective upon written notice thereof being given to the Subcontractor. No assignation of this Agreement by any other party shall be permitted.

4.2 The Subcontractor agrees that it shall not at any time assert that any permitted assignee in terms of this Agreement is precluded from recovering any loss resulting from any breach of this Agreement by reason that such assignee is not an original party to this Agreement or that no less or a different loss has been suffered by such assignee.

5 NO WAIVER OR VARIATION

5.1 No failure, approval, act or forbearance on the part of the Beneficiary in respect of any right of the Beneficiary pursuant to this Agreement shall constitute any waiver of any right of the Beneficiary under or arising out of this Agreement nor relieve the Subcontractor of any of its duties or obligations under or arising out of this Agreement.

5.2 The Subcontractor will not seek to modify or vary any of the obligations for which it is responsible under the Subcontract in any respect if that modification or variation will be detrimental to the Beneficiary or affects the Beneficiary's rights or obligations under the DBFM Agreement, the Construction Contract or this Agreement or affects the Subcontractor's obligations under this Agreement.

6 EQUIVALENT RIGHTS

The obligations of the Subcontractor under this Agreement shall be no greater in extent or quantity than if the Beneficiary had been named as joint employer with the Contractor under the Subcontract. The Subcontractor shall be entitled in any action or proceedings by the Beneficiary to rely on any limitation in the Subcontract and to raise the equivalent rights in defence of liability as it would have against the Contractor under the Subcontract (other than retention, counterclaim, set-off or to state a defence of no loss or a different loss has been suffered by the Contractor).

7 NOTICES

7.1 Any notice, consent or demand to be given or made by any party under this Agreement (hereinafter called a "Notice") shall only be validly served if in writing and delivered personally or sent by pre-paid first class recorded delivery post to the

following address and marked for the attention of the following person in the case of each party:

Party	Address	Person
The Beneficiary	Lothian Health Board Waverley Gate 2-4 Waterloo Place Edinburgh EH1 3EG	The Chief Executive
The Contractor	[•]	[•]
The Subcontractor	[•]	[•]

Any party may by Notice to the other party/parties change its address, or the title of the person for whose attention Notices are to be given or made pursuant to this Clause. Any such Notice shall be deemed to have been received:

7.1.1 if delivered personally, at the time of delivery; and

7.1.2 in the case of pre-paid first class recorded delivery post, on the first Business Day after the date of posting.

7.2 If any Notice is delivered after 5 p.m. on a Business Day, or at any time during a day which is not a Business Day, that Notice shall be deemed to have been received at 9 a.m. on the next Business Day.

7.3 For the purposes of this Clause 7 (*Notices*), "Business Day" means any day which is not a Saturday, a Sunday or a public holiday in Scotland. In proving service it shall be sufficient to prove that the envelope containing such Notice was properly addressed to the relevant party and either delivered personally to that address or delivered into the custody of the postal authorities as a pre-paid first class recorded delivery letter. For the avoidance of doubt, Notices shall not be validly served if sent by e-mail or fax.

7.4 The definitions of words and phrases used in this Agreement shall be those set out in the Construction Contract and the Subcontract except where expressly defined in this Agreement.

7.5 This Agreement shall be governed by and construed in accordance with Scots Law and the parties hereto submit to the exclusive jurisdiction of the Scottish Courts.

7.6 Save to the extent expressly provided in this Agreement no provision of this Agreement is intended to or does confer upon any third party any benefit or right enforceable at the option of that third party or any liability whatsoever to any third party, and without prejudice to the generality of the foregoing, there shall not in any circumstances be created by this Agreement a jus quaesitum tertio in favour of any person whatsoever.

IN WITNESS WHEREOF this Agreement consisting of this and the preceding [ ] pages is executed as follows:

SIGNED for and on behalf of
LOTHIAN HEALTH BOARD

at

on the day

of 2015

by

.....
Authorised Signatory

..... Full Name

Before this witness

..... Witness

..... Full Name
..... Address

.....

SUBSCRIBED for and on behalf of **BROOKFIELD MULTIPLEX CONSTRUCTION EUROPE LIMITED**

at

On the day of 2015 as follows:-

..... (Director/Authorised Signatory)

..... Full Name

Before this witness: -

Witness .....

Full name .....

Address .....

.....

.....

SUBSCRIBED for and on behalf of the said **[SUBCONTRACTOR]**

at

on

By

Print Full Name Authorised Signatory

before this witness

Print Full Name

Witness

Address

SECTION 4

[NOT USED]

SECTION 5

[NOT USED]

SECTION 6

COLLATERAL WARRANTY: SUBCONTRACTOR TO PROJECT CO

AMONG:

(1) **IHS LOTHIAN LTD**, a company incorporated in Scotland under the Companies Acts (Registered Number SC493676)) and having its Registered Office at 50 Lothian Road, Festival Square, Edinburgh, EH39WJ (**"Project Co"** which expression shall include its successors in title or permitted assignees under this Agreement);

and

(2) **BROOKFIELD MULTIPLEX CONSTRUCTION EUROPE LIMITED**, a company incorporated in England and Wales under the Companies Acts (Registered Number 03808946) and having its Registered Office at 99 Bishopsgate, London EC2M 3XD (the **"Contractor"** which expression shall include its successors in title or permitted assignees under this Agreement).

and

(3) **[ ] LIMITED**, a company incorporated in [Scotland/England and Wales/Northern Ireland] under the Companies Acts (Registered Number [ ]) and having its Registered Office at [ ] (the **"Subcontractor"**).

WHEREAS:

(A) The Lothian Health Board and the Beneficiary have entered into an agreement for the design, build, finance and maintenance of a project to re-provide services from the Royal Hospital for Sick Children, Child and Adolescent Mental Health Service and the Department of Clinical Neurosciences in a single building adjoining the Royal Infirmary of Edinburgh at Little France (the **"Project"**) on or about the date hereof (the **"DBFM Agreement"**).

(B) The Beneficiary and the Contractor have entered into a contract (the **"Construction Contract"**) on or about the date of the DBFM Agreement for the design and construction of the Project (the **"Contract Works"**).

(C) The Contractor has entered or intends to enter into an agreement with the Subcontractor whereby the Subcontractor will provide certain works (the **"Subcontract Works"**) in connection with the Project (**"the Subcontract"**) as more particularly described in the Appointment.

(D) It is a condition of the Appointment that the Subcontractor enters this Agreement with the Beneficiary.

(E) The Beneficiary shall be entitled to rely and is deemed to have relied on the Subcontractor's reasonable skill, care and diligence in respect of all matters covered by this Agreement insofar as they relate to the Subcontract Works provided by the Subcontractor under the Subcontract.

NOW IT IS AGREED as follows:

1 WARRANTY AND UNDERTAKING

1.1 The Subcontractor warrants and undertakes to the Beneficiary that it has complied and will continue to comply with all the terms and obligations and duties under or arising out of the Subcontract on the Subcontractor's part to be performed and observed and shall complete the Subcontract Works in accordance with the Subcontract.

1.2 Without prejudice to Clause 1.1 of this Agreement, the Subcontractor further warrants and undertakes to the Beneficiary that:

1.2.1 it has exercised and will continue to exercise all the due skill, care and diligence of a properly qualified and competent subcontractor experienced in providing design of Works on projects similar in nature, size and complexity to the Project in:

(a) the design of the Subcontract Works;

(b) the materials selected or specified by or on its behalf for use in the Subcontract Works (or any part or parts thereof) are in accordance with the guidance contained in the Good Practice Guidance and this Clause 1.2.1(b); and

(c) the performance of the Subcontract Works to the Contractor under the Subcontracts.

1.2.2 only materials and goods which are new and of sound and satisfactory quality shall be specified for use in connection with the Subcontract Works; and

1.2.3 there shall not be specified for use in connection with the Subcontract Works any materials or substances which are expressly prohibited by the Subcontract or which are generally known not to be in accordance with British or European Standards and Codes of Practice at the time of specification or use (as applicable), or any materials or substances which are deleterious to health and safety or to the durability of buildings and/or other structures and/or finishes and/or plant and machinery in the particular circumstances in which they are used, or any materials or substances identified as deleterious, unsatisfactory or unsuitable in the relevant circumstances in the Good Practice Guidance and, in addition to and separate from the foregoing, any substances or combination of substances publicised prior to the time of construction in any Building Research Establishment Limited ("BRE") publications issued as part of the BRE Professional development service which the BRE recommend are not used for building purposes or for the type of buildings comprised in the Project.

1.2.4 For the purposes of Clause 1.2.1, **"Good Practice Guidance"** means the edition of the publication entitles "Good practice in the selection of construction materials" (British Council for Offices (BCO): 2011) or any amended or updated version as at the Commencement Date (as such term is defined in the DBFM Agreement):

1.2.5 the final design and all materials and goods specified therein will correspond as to description, quality and condition with the requirements of the Subcontract;

1.2.6 the final design will at practical completion or its equivalent under the Subcontract, as the case may be, comply with all relevant legislation and Good Industry Practice;

2 INSURANCE

2.1 The Subcontractor shall maintain throughout the duration of provision of the Services and for a period of 12 years after the date of practical completion or its equivalent under the Construction Contract, professional indemnity insurance in an amount of not less than [five] million pounds (£[5,000,000]) sterling on an each and every claim basis and for any one occurrence or series of occurrences arising out of any one event with insurer of good repute carrying on business in the European Union

provided always that such insurance is available at rates which are commercially reasonable to subcontractors.

2.2 In determining whether or not insurance is available as aforesaid, the financial characteristics and claims' record of the Subcontractor shall be ignored.

2.3 The Subcontractor shall immediately inform the Beneficiary if such insurance ceases to be available at rates which are commercially reasonable in order that the Subcontractor and the Beneficiary can consider alternative means of best protecting their respective positions in respect of the Project in the absence of such insurance provided that the Beneficiary shall be entitled to require the Subcontractor to maintain such lesser amount of Professional Indemnity Insurance as is available to the Subcontractor at rates which are commercially reasonable.

2.4 As and when it is reasonably requested to do so by the Beneficiary the Subcontractor shall produce for inspection documentary evidence satisfactory to the Beneficiary (acting reasonably) that its Professional Indemnity Insurance is being maintained.

2.5 The Subcontractor confirms that this Agreement has been disclosed to and has been approved by the Subcontractor's Professional Indemnity Insurers or Underwriters.

2.6 Should the Subcontractor be in breach of any of its obligations under this Clause 2 (Insurance), the Beneficiary may itself insure against any risk with respect to which the breach shall have occurred and may recover such sum or sums from the Subcontractor as a debt.

3 COPYRIGHT

3.1 The Subcontractor hereby grants to the Beneficiary or its appointee and all those authorised by the Beneficiary an irrevocable, transferable, non-exclusive and royalty-free licence (which shall be capable of assignation) to use and reproduce all information (whether or not stored in computer systems), drawings, models, bills of quantities, specifications, schedules, details, plans, programmes, budgets, reports, calculations or other documents, work or things including all applicable passwords or access codes whatsoever provided or to be provided by the Subcontractor in connection with the Subcontract Works (the "**Documents**") for such purposes as the Beneficiary may at its sole discretion require.

3.2 Such licence shall carry the right to grant sub-licences and shall subsist notwithstanding that the Subcontract is terminated or the obligations and duties there under have been completed. For the avoidance of doubt, the grant of such licence or sub-licences shall not impose any additional liability on the Subcontractor.

3.3 The Subcontractor shall on reasonable demand provide to the Beneficiary or its appointee and those authorised by the Beneficiary additional copies of any documents on receipt of reasonable copying costs. The Subcontractor will not be liable for any use by the Beneficiary or any appointee or sub-licensee of any of the Documents for any purpose other than that for which the same were prepared and provided by the Subcontractor or for any improper or negligent use by the Beneficiary or any appointee or sub-licensee.

3.4 The Subcontractor agrees to indemnify and keep indemnified the Beneficiary from and against all loss, damage, cost, expense, liability or claim in respect of breach of the copyright or other intellectual property rights of any third party caused by or arising out of the carrying out of the Subcontract Works or the use of the licence.

4 ASSIGNATION

4.1 This Agreement may be assigned or otherwise transferred, novated, in whole or in part by the Beneficiary on no more than two occasions to any successor to the

Beneficiary's interest in the Project or any part thereof without the consent of the Subcontractor being required and such assignation shall be effective upon written notice thereof being given to the Subcontractor. No assignation of this Agreement by any other party shall be permitted.

Notwithstanding the foregoing, the Beneficiary shall at any time be fully entitled to assign or transfer its rights under this Agreement any number of times without the consent of the Contractor or the Subcontractor to any undertaking which is a group undertaking in relation to the Beneficiary and/or to any other undertaking in which the Beneficiary or any other group undertaking holds more than 25 per cent of the shares. For these purposes the expressions "undertaking", "group undertaking" and "shares" have the meanings given in section 1161 of the Companies Act 2006.

4.2 The Subcontractor agrees that it shall not at any time assert that any permitted assignee in terms of this Agreement is precluded from recovering any loss resulting from any breach of this Agreement by reason that such assignee is not an original party to this Agreement or that no less or a different loss has been suffered by such assignee.

5 NO WAIVER OR VARIATION

5.1 No failure, approval, act or forbearance on the part of the Beneficiary in respect of any right of the Beneficiary pursuant to this Agreement shall constitute any waiver of any right of the Beneficiary under or arising out of this Agreement nor relieve the Subcontractor of any of its duties or obligations under or arising out of this Agreement.

5.2 The Subcontractor will not seek to modify or vary any of the obligations for which it is responsible under the Appointment in any respect if that modification or variation will be detrimental to the Beneficiary or affects the Beneficiary's rights or obligations under the DBFM Agreement, the Construction Contract or this Agreement or affects the Subcontractor's obligations under this Agreement.

6 EQUIVALENT RIGHTS

The obligations of the Subcontractor under this Agreement shall be no greater in extent or quantity than if the Beneficiary had been named as joint employer with the Contractor under the Appointment. The Subcontractor shall be entitled in any action or proceedings by the Beneficiary to rely on any limitation in the Appointment and to raise the equivalent rights in defence of liability as it would have against the Contractor under the Subcontract (other than retention, counterclaim, set-off or to state a defence of no loss or a different loss has been suffered by the Contractor)

7 NOTICES

7.1 Any notice, consent or demand to be given or made by any party under this Agreement (hereinafter called a "Notice") shall only be validly served if in writing and delivered personally or sent by pre-paid first class recorded delivery post to the following address and marked for the attention of the following person in the case of each party:

Party	**Address**		**Person**
The Beneficiary	[•]		[•]

The Contractor	[•]		[•]
The Subcontractor	[•]		[•]

Any party may by Notice to the other party/parties change its address or the title of the person for whose attention Notices are to be given or made pursuant to this Clause. Any such Notice shall be deemed to have been received:

7.1.1 if delivered personally, at the time of delivery, and

7.1.2 in the case of pre-paid first class recorded delivery post, on the first Business Day after the date of posting

7.2 If any Notice is delivered after 5 p.m. on a Business Day, or at any time during a day which is not a Business Day, that Notice shall be deemed to have been received at 9 a.m. on the next Business Day.

7.3 For the purposes of this Clause 7 (*Notices*), "Business Day" means any day which is not a Saturday, a Sunday or a public holiday in Scotland. In proving service it shall be sufficient to prove that the envelope containing such Notice was properly addressed to the relevant party and either delivered personally to that address or delivered into the custody of the postal authorities as a pre-paid first class recorded delivery letter. For the avoidance of doubt, Notices shall not be validly served if sent by e-mail or fax.

7.4 The definitions of words and phrases used in this Agreement shall be those set out in the Construction Contract and the Subcontract except where expressly defined in this Agreement.

7.5 This Agreement shall be governed by and construed in accordance with Scots Law and the parties hereto submit to the exclusive jurisdiction of the Scottish Courts.

7.6 Save to the extent expressly provided in this Agreement no provision of this Agreement is intended to or does confer upon any third party any benefit or right enforceable at the option of that third party or any liability whatsoever to any third party, and without prejudice to the generality of the foregoing, there shall not in any circumstances be created by this Agreement a jus quaesitum tertio in favour of any person whatsoever.

8 STEP IN

8.1 The Subcontractor shall not without first giving the Beneficiary not less than twenty eight days written notice exercise or seek to exercise any rights it may have to determine its employment under the Subcontract or treat it as having been determined by the Contractor (which expression in this and the succeeding clause shall include the appointment of a liquidator, receiver, administrator, administrative receiver or manager of the Contractor) or to discontinue performance of any service or obligations thereunder. The Contractor agrees that any period stipulated in the Subcontract for the exercise by the Subcontractor of a right of termination shall nonetheless be extended as may be necessary to take account of the period of notice required under this Clause 8.1.

8.2 The Subcontractor acknowledges that its right to determine its employment under the Subcontract or treat it as determined by, or repudiated by, the Contractor or to discontinue performance as aforesaid shall cease if within the said period of twenty eight days referred to in clause 8 hereof:

8.2.1 the Beneficiary gives the Subcontractor written notice requiring the Subcontractor to fulfil the terms of the Subcontract as if it and not the Contractor were its employer thereunder, and

8.2.2 the Beneficiary acknowledges in such notice that it is assuming all of the obligations of the Contractor under the Subcontract, including without prejudice to the foregoing generality payment of any monies due outstanding at the date of the notice or which may subsequently become due under the Subcontract.

8.3 In the event of notice being given by the Beneficiary as aforesaid, the Subcontract will continue in full force and effect as if no right to determine the Subcontract or treat it as determined had arisen. The Subcontractor shall, where the Beneficiary has given notice under Clause 8.2.1 hereof, assume liability to the Beneficiary in terms of the Subcontract in lieu of the liability to the Contractor.

8.4 The Subcontractor shall, if so required by the Beneficiary following determination of the Subcontract, contract direct with the Beneficiary or its nominees by novation or otherwise on the same terms, mutatis mutandis, as are contained in the Appointment provided that the Beneficiary gives the Subcontractor written notice requiring the Subcontractor to do so within a period of twenty eight days from the date of determination of the Subcontract.

8.5 the Beneficiary acknowledges that the Security Trustee shall take priority over the rights and benefits available to Project Co under this Agreement

8.6 The Contractor has agreed to be a party to this Agreement for the purposes of acknowledging that the Subcontractor shall not be in breach of the Subcontract by complying with the obligations imposed on it by clauses 8.1 and 8.2.1.

IN WITNESS WHEREOF this Agreement consisting of this and the preceding 8 pages is executed as follows:

SIGNED for and on behalf of
LOTHIAN HEALTH BOARD

at

on the day
of 2015

by

.....
Authorised Signatory

..... Full Name

Before this witness

..... Witness

..... Full Name
..... Address
.....

SUBSCRIBED for and on behalf of **BROOKFIELD MULTIPLEX CONSTRUCTION EUROPE LIMITED**

at

On the day of 2015 as follows:-

..... (Director/Authorised Signatory)

..... Full Name

Before this witness: -

Witness .....

Full name .....

Address .....

.....

.....

SUBSCRIBED for and on behalf of the said **[SUBCONTRACTOR]**

at

on

By

Print Full Name Authorised Signatory

before this witness

Print Full Name Witness

Address

SECTION 7

COLLATERAL WARRANTY: SUBCONTRACTOR TO SECURITY TRUSTEE

AMONG:

(1) **PRUDENTIAL TRUSTEE COMPANY LIMITED** , (Registered Number 01863305) whose registered office at Laurence Pountney Hill, London, EC4R OHH ("**Beneficiary**" which expression shall include its successors in title or permitted assignees under this Agreement);

and

(2) **BROOKFIELD MULTIPLEX CONSTRUCTION EUROPE LIMITED**, a company incorporated in England and Wales under the Companies Acts (Registered Number 03808946) and having its Registered Office at 99 Bishopsgate, London EC2M 3XD (the "**Contractor**" which expression shall include its successors in title or permitted assignees under this Agreement).

and

(3) **[ ] LIMITED**, a company incorporated in [Scotland/England and Wales/Northern Ireland] under the Companies Acts (Registered Number [ ]) and having its Registered Office at [ ] (the "**Subcontractor**").

WHEREAS:

(A) The Lothian Health Board and IHS Lothian Limited have entered into an agreement for the design, build, finance and maintenance of a project to re-provide services from the Royal Hospital for Sick Children, Child and Adolescent Mental Health Service and the Department of Clinical Neurosciences in a single building adjoining the Royal Infirmary of Edinburgh at Little France (the "**Project**") on or about the date hereof (the "**DBFM Agreement**").

(B) IHS Lothian Ltd and the Contractor have entered into a contract (the "**Construction Contract**") on or about the date of the DBFM Agreement for the design and construction of the Project (the "**Contract Works**").

(C) The Secured Creditors have entered into a funding agreement with IHS Lothian in relation to the Project. The Beneficiary is the agent and trustee of the Secured Creditors as defined in the funding agreement.

(D) The Contractor has entered or intends to enter into an agreement with the Subcontractor whereby the Subcontractor will provide certain works (the "**Subcontract Works**") in connection with the Project ("**the Subcontract**") as more particularly described in the Appointment.

(E) It is a condition of the Appointment that the Subcontractor enters this Agreement with the Beneficiary.

(F) The Beneficiary shall be entitled to rely and is deemed to have relied on the Subcontractor's reasonable skill, care and diligence in respect of all matters covered by this Agreement insofar as they relate to the Subcontract Works provided by the Subcontractor under the Subcontract.

NOW IT IS AGREED as follows:

1 WARRANTY AND UNDERTAKING

1.1 The Subcontractor warrants and undertakes to the Beneficiary that it has complied and will continue to comply with all the terms and obligations and duties under or arising out of the Subcontract on the Subcontractor's part to be performed and

observed and shall complete the Subcontract Works in accordance with the Subcontract.

1.2 Without prejudice to Clause 1.1 of this Agreement, the Subcontractor further warrants and undertakes to the Beneficiary that:

1.2.1 it has exercised and will continue to exercise all the due skill, care and diligence of a properly qualified and competent subcontractor experienced in providing design of Works on projects similar in nature, size and complexity to the Project in:

(a) the design of the Subcontract Works;

(b) the materials selected or specified by or on its behalf for use in the Subcontract Works (or any part or parts thereof) are in accordance with the guidance contained in the Good Practice Guidance and this Clause 1.2.1(b); and

(c) the performance of the Subcontract Works to the Contractor under the Subcontracts.

1.2.2 only materials and goods which are new and of sound and satisfactory quality shall be specified for use in connection with the Subcontract Works; and

1.2.3 there shall not be specified for use in connection with the Subcontract Works any materials or substances which are expressly prohibited by the Subcontract or which are generally known not to be in accordance with British or European Standards and Codes of Practice at the time of specification or use (as applicable), or any materials or substances which are deleterious to health and safety or to the durability of buildings and/or other structures and/or finishes and/or plant and machinery in the particular circumstances in which they are used, or any materials or substances identified as deleterious, unsatisfactory or unsuitable in the relevant circumstances in the Good Practice Guidance and, in addition to and separate from the foregoing, any substances or combination of substances publicised prior to the time of construction in any Building Research Establishment Limited ("BRE") publications issued as part of the BRE Professional development service which the BRE recommend are not used for building purposes or for the type of buildings comprised in the Project.

1.2.4 For the purposes of Clause 1.2.1, **"Good Practice Guidance"** means the edition of the publication entitles "Good practice in the selection of construction materials" (British Council for Offices (BCO): 2011) or any amended or updated version as at the Commencement Date (as such term is defined in the DBFM Agreement):

1.2.5 the final design and all materials and goods specified therein will correspond as to description, quality and condition with the requirements of the Subcontract;

1.2.6 the final design will at practical completion or its equivalent under the Subcontract, as the case may be, comply with all relevant legislation and Good Industry Practice;

2 INSURANCE

2.1 The Subcontractor shall maintain throughout the duration of provision of the Services and for a period of 12 years after the date of practical completion or its equivalent under the Construction Contract, professional indemnity insurance in an amount of not less than [five] million pounds (£[5 ,000,000]) sterling on an each and every claim

basis and for any one occurrence or series of occurrences arising out of any one event with insurers of good repute carrying on business in the European Union provided always that such insurance is available at rates which are commercially reasonable to subcontractors.

2.2 In determining whether or not insurance is available as aforesaid, the financial characteristics and claims' record of the Subcontractor shall be ignored.

2.3 The Subcontractor shall immediately inform the Beneficiary if such insurance ceases to be available at rates which are commercially reasonable in order that the Subcontractor and the Beneficiary can consider alternative means of best protecting their respective positions in respect of the Project in the absence of such insurance provided that the Beneficiary shall be entitled to require the Subcontractor to maintain such lesser amount of Professional Indemnity Insurance as is available to the Subcontractor at rates which are commercially reasonable.

2.4 As and when it is reasonably requested to do so by the Beneficiary the Subcontractor shall produce for inspection documentary evidence satisfactory to the Beneficiary (acting reasonably) that its Professional Indemnity Insurance is being maintained.

2.5 The Subcontractor confirms that this Agreement has been disclosed to and has been approved by the Subcontractor's Professional Indemnity Insurers or Underwriters.

2.6 Should the Subcontractor be in breach of any of its obligations under this Clause 2 (Insurance), the Beneficiary may itself insure against any risk with respect to which the breach shall have occurred and may recover such sum or sums from the Subcontractor as a debt.

3 COPYRIGHT

3.1 The Subcontractor hereby grants to the Beneficiary or its appointee and all those authorised by the Beneficiary an irrevocable, transferable, non-exclusive and royalty-free licence (which shall be capable of assignation) to use and reproduce all information (whether or not stored in computer systems), drawings, models, bills of quantities, specifications, schedules, details, plans, programmes, budgets, reports, calculations or other documents, work or things including all applicable passwords or access codes whatsoever provided or to be provided by the Subcontractor in connection with the Subcontract Works (the "**Documents**") for such purposes as the Beneficiary may at its sole discretion require.

3.2 Such licence shall carry the right to grant sub-licences and shall subsist notwithstanding that the Subcontract is terminated or the obligations and duties there under have been completed. For the avoidance of doubt, the grant of such licence or sub-licences shall not impose any additional liability on the Subcontractor.

3.3 The Subcontractor shall on reasonable demand provide to the Beneficiary or its appointee and those authorised by the Beneficiary additional copies of any documents on receipt of reasonable copying costs. The Subcontractor will not be liable for any use by the Beneficiary or any appointee or sub-licensee of any of the Documents for any purpose other than that for which the same were prepared and provided by the Subcontractor or for any improper or negligent use by the Beneficiary or any appointee or sub-licensee.

3.4 The Subcontractor agrees to indemnify and keep indemnified the Beneficiary from and against all loss, damage, cost, expense, liability or claim in respect of breach of the copyright or other intellectual property rights of any third party caused by or arising out of the carrying out of the Subcontract Works or the use of the licence.

4 ASSIGNATION

4.1 This Agreement may be assigned or otherwise transferred, novated, in whole or in part by the Beneficiary on no more than two occasions to any successor to the Beneficiary's interest in the Project or any part thereof without the consent of the Subcontractor being required and such assignation shall be effective upon written notice thereof being given to the Subcontractor. No assignation of this Agreement by any other party shall be permitted.

Notwithstanding the foregoing, the Beneficiary shall at any time be fully entitled to assign or transfer its rights under this Agreement any number of times without the consent of the Contractor or the Subcontractor to any undertaking which is a group undertaking in relation to the Beneficiary and/or to any other undertaking in which the Beneficiary or any other group undertaking holds more than 25 per cent of the shares. For these purposes the expressions "undertaking", "group undertaking" and "shares" have the meanings given in section 1161 of the Companies Act 2006.

4.2 The Subcontractor agrees that it shall not at any time assert that any permitted assignee in terms of this Agreement is precluded from recovering any loss resulting from any breach of this Agreement by reason that such assignee is not an original party to this Agreement or that no less or a different loss has been suffered by such assignee.

5 NO WAIVER OR VARIATION

5.1 No failure, approval, act or forbearance on the part of the Beneficiary in respect of any right of the Beneficiary pursuant to this Agreement shall constitute any waiver of any right of the Beneficiary under or arising out of this Agreement nor relieve the Subcontractor of any of its duties or obligations under or arising out of this Agreement.

5.2 The Subcontractor will not seek to modify or vary any of the obligations for which it is responsible under the Appointment in any respect if that modification or variation will be detrimental to the Beneficiary or affects the Beneficiary's rights or obligations under the DBFM Agreement, the Construction Contract or this Agreement or affects the Subcontractor's obligations under this Agreement.

6 EQUIVALENT RIGHTS

The obligations of the Subcontractor under this Agreement shall be no greater in extent or quantity than if the Beneficiary had been named as joint employer with the Contractor under the Appointment. The Subcontractor shall be entitled in any action or proceedings by the Beneficiary to rely on any limitation in the Appointment and to raise the equivalent rights in defence of liability as it would have against the Contractor under the Subcontract (other than retention, counterclaim, set-off or to state a defence of no loss or a different loss has been suffered by the Contractor)

7 NOTICES

7.1 Any notice, consent or demand to be given or made by any party under this Agreement (hereinafter called a "Notice") shall only be validly served if in writing and delivered personally or sent by pre-paid first class recorded delivery post to the following address and marked for the attention of the following person in the case of each party:

Party	Address		Person
The Beneficiary	[•]		[•]
The Contractor	[•]		[•]
The Subcontractor	[•]		[•]

Any party may by Notice to the other party/parties change its address or the title of the person for whose attention Notices are to be given or made pursuant to this Clause. Any such Notice shall be deemed to have been received:

7.1.1 if delivered personally, at the time of delivery, and

7.1.2 in the case of pre-paid first class recorded delivery post, on the first Business Day after the date of posting.

7.2 If any Notice is delivered after 5 p.m. on a Business Day, or at any time during a day which is not a Business Day, that Notice shall be deemed to have been received at 9 a.m. on the next Business Day.

7.3 For the purposes of this Clause 7 (*Notices*), "Business Day" means any day which is not a Saturday, a Sunday or a public holiday in Scotland. In proving service it shall be sufficient to prove that the envelope containing such Notice was properly addressed to the relevant party and either delivered personally to that address or delivered into the custody of the postal authorities as a pre-paid first class recorded delivery letter. For the avoidance of doubt, Notices shall not be validly served if sent by e-mail or fax.

7.4 The definitions of words and phrases used in this Agreement shall be those set out in the Construction Contract and the Subcontract except where expressly defined in this Agreement.

7.5 This Agreement shall be governed by and construed in accordance with Scots Law and the parties hereto submit to the exclusive jurisdiction of the Scottish Courts.

7.6 Save to the extent expressly provided in this Agreement no provision of this Agreement is intended to or does confer upon any third party any benefit or right enforceable at the option of that third party or any liability whatsoever to any third party, and without prejudice to the generality of the foregoing, there shall not in any circumstances be created by this Agreement a jus quaesitum tertio in favour of any person whatsoever.

8 STEP IN

8.1 The Subcontractor shall not without first giving the Beneficiary not less than twenty eight days written notice exercise or seek to exercise any rights it may have to determine its employment under the Subcontract or treat it as having been determined by the Contractor (which expression in this and the succeeding clause shall include the appointment of a liquidator, receiver, administrator, administrative receiver or manager of the Contractor) or to discontinue performance of any service

or obligations thereunder. The Contractor agrees that any period stipulated in the Subcontract for the exercise by the Subcontractor of a right of termination shall nonetheless be extended as may be necessary to take account of the period of notice required under this Clause 8.1.

8.2 The Subcontractor acknowledges that its right to determine its employment under the Subcontract or treat it as determined by, or repudiated by, the Contractor or to discontinue performance as aforesaid shall cease if within the said period of twenty eight days referred to in clause 8 hereof

8.2.1 the Beneficiary gives the Subcontractor written notice requiring the Subcontractor to fulfil the terms of the Subcontract as if it and not the Contractor were its employer thereunder, and

8.2.2 the Beneficiary acknowledges in such notice that it is assuming all of the obligations of the Contractor under the Subcontract, including without prejudice to the foregoing generality payment of any monies due outstanding at the date of the notice or which may subsequently become due under the Subcontract.

8.3 In the event of notice being given by the Beneficiary as aforesaid, the Subcontract will continue in full force and effect as if no right to determine the Subcontract or treat it as determined had arisen. The Subcontractor shall, where the Beneficiary has given notice under Clause 8.2.1 hereof, assume liability to the Beneficiary in terms of the Subcontract in lieu of the liability to the Contractor.

8.4 The Subcontractor shall, if so required by the Beneficiary following determination of the Subcontract, contract direct with the Beneficiary or its nominees by novation or otherwise on the same terms, mutatis mutandis, as are contained in the Appointment provided that the Beneficiary gives the Subcontractor written notice requiring the Subcontractor to do so within a period of twenty eight days from the date of determination of the Subcontract.

8.5 If two or more valid notices claiming the benefit of a step in right relating to the Subcontract and/or a right to issue instructions to the Subcontractor are received by the Subcontractor the deemed order of priority of such notices shall be that issued hereunder by the Beneficiary before any issued by any other party. Only the notice deemed to have first priority shall take effect and no other relevant notice shall bind the Subcontractor and it is agreed the Beneficiary under this warranty will take priority over Project Co.

8.6 The Contractor has agreed to be a party to this Agreement for the purposes of acknowledging that the Subcontractor shall not be in breach of the Subcontract by complying with the obligations imposed on it by clauses 8.1 and 8.2.1.

IN WITNESS WHEREOF this Agreement consisting of this and the preceding 8pages is executed as follows:

SUBSCRIBED for and on behalf of the said
PRUDENTIAL TRUSTEE COMPANY LIMITED

at

on

by

Print Full Name [Director/ Authorised Signatory]

before this witness

Print Full Name Witness

Address

SUBSCRIBED for and on behalf of the said
BROOKFIELD MULTIPLEX CONSTRUCTION EUROPE LIMITED

at

on

by

Print Full Name [Authorised Signatory]

before this witness

Print Full Name Witness

Address

SUBSCRIBED for and on behalf of the said

[SUBCONTRACTOR]

at

on

by

Print Full Name [Authorised Signatory]

before this witness

Print Full Name Witness

Address

SCHEDULE PART 10

OUTLINE COMMISSIONING PROGRAMME

1 PRE-COMPLETION COMMISSIONING

1.1 The Contractor's Pre-Completion Commissioning shall comprise the activities described as such in Table A of Appendix A of this Schedule Part 10 (*Outline Commissioning Programme*) and more fully set out in Appendix C of this Schedule Part 10 (*Outline Commissioning Programme*).

1.2 The Contractor shall give written notice to each of the Independent Tester, the Project Co Representative and the Board's Representative of the commencement of the Contractor's Pre-Completion Commissioning not less than five (5) Business Days prior to the date when the Contractor (acting reasonably) considers that it shall commence the Contractor's Pre-Completion Commissioning.

1.3 The Board's Pre-Completion Commissioning shall comprise the activities identified as such in Table A of Appendix A of this Schedule Part 10 (*Outline Commissioning Programme*) and more fully set out in Appendix C of this Schedule Part 10 (*Outline Commissioning Programme*).

1.4 The Contractor shall give written notice to each of the Project Co's Representative and the Board's Representative of the date upon which the Board shall be entitled to commence the Board's Pre-Completion Commissioning, such notice to be given at least one (1) month prior to the date when the Contractor (acting reasonably) considers that the Board should commence the Board's Commissioning in accordance with the Final Commissioning Programme.

2 POST-COMPLETION COMMISSIONING

2.1 The Contractor's Post-Completion Commissioning shall comprise the activities identified as such in Table A of Appendix A of this Schedule Part 10 (*Outline Commissioning Programme*) and more fully set out in Appendix C of this Schedule Part 10 (*Outline Commissioning Programme*) .

2.2 The Board's Post-Completion Commissioning shall comprise the activities identified as such in Table A of Appendix A of this Schedule Part 10 (*Outline Commissioning Programme*) and more fully set out in Appendix C of this Schedule Part 10 (*Outline Commissioning Programme*) .

3 EQUIPMENT AND TRAINING

3.1 The Contractor shall not clean, or move to enable general cleaning, items of equipment so identified by the Board unless in agreement with the Project Co's Representative and the Board's Representative. This shall include but not be limited to:

3.1.1 physiological monitoring equipment;

3.1.2 department based computers, visual display units and radiographic equipment or machine consoles including anything bearing radiation or hazard Warning signs; and

3.1.3 equipment that is plugged in for re-charging.

3.2 Not Used.

SCHEDULE PART 10: OUTLINE COMMISSIONING PROGRAMME

APPENDIX A: COMMISSIONING RESPONSIBILITIES

Table A:

Area	Pre-Completion Commissioning		Post-Completion Commissioning	
	Contractor	**Board**	**Contractor**	**Board**
Rooms/areas which contain Equipment to be installed by the Contractor and contains Equipment to be installed/commissioned by the Board prior to the Completion Date.	The Contractor to install, commission, test and asset tag Group 1 Equipment as required in accordance Schedule Part 11 (*Equipment*) and the Final Commissioning Programme. The Contractor to install commission and test Group 2A Equipment as required in accordance with Schedule Part 11 (Equipment) and the Final Commissioning Programme Equipment to be protected by the Contractor until after the Actual Completion Date. Completion of Works after Equipment installation. The Contractor to carry out Handover Clean in accordance with the Final Commissioning Programme.	Board to install, commission, test and asset tag Group 2B Equipment in accordance with Schedule Part 11 (*Equipment*) and the Final Commissioning Programme.	None required.	Board to install, commission, test and asset tag remaining Group 2B Equipment and to install, commission, test and asset tag Group 3 Equipment as required pursuant to Schedule Part 11 (*Equipment*) and the Final Commissioning Programme. Board to carry out Clinical Clean in accordance with the Final Commissioning Programme. Board transfer of patients to be carried out in accordance with the Final Commissioning Programme.
Rooms/areas which contain Equipment to be installed by the Contractor and contain Equipment to be	the Contractor to install, commission, test and asset tag Group 1 Equipment as required in	None required.	Notwithstanding Project Co's obligations under the Service Level Specification, the Contractor shall support the Board	Board to install, commission, test and asset tag, Group 2B Equipment and Group 3 Equipment as

Area	Pre-Completion Commissioning		Post-Completion Commissioning	
	Contractor	**Board**	**Contractor**	**Board**
installed/commissioned by the Board following the Completion Date.	accordance with Schedule Part 11 (*Equipment*) and the Final Commissioning Programme. The Contractor to install commission and test Group 2A Equipment as required in accordance with Schedule Part 11 (Equipment) and the Final Commissioning Programme. The Contractor to carry out Handover Clean in accordance with the Final Commissioning programme.		in achieving a "clinically clean" standard to the satisfaction of the Board's Head of Service Infection Control Facilities pursuant to the NHS Scotland National Cleaning Services Specification through the provision of relevant cleaning and maintenance of the Plant or Group 1 Equipment as required. See Interface Agreement Appendix 2 item 5(a) for division of responsibility between the Contractor and the Service Provider.	required pursuant to Schedule Part 11 (*Equipment*) and the Final Commissioning Programme. Board to carry out Clinical Clean in accordance with the Final Commissioning Programme. Board transfer of patients to be carried out in accordance with the Final Commissioning Programme.

Area	Pre-Completion Commissioning		Post-Completion Commissioning	
	Contractor	**Board**	**Contractor**	**Board**
ICT	The relevant infrastructure to be provided by the Contractor as part of the works has been installed, commissioned and tested in accordance with the Final Commissioning Programme. The Contractor to carry out Handover Clean in accordance with the Final Commissioning Programme.	Board hardware installed, commissioned and tested (this being the network, servers and workstations in clinical and non clinical areas) in accordance with the Final Commissioning Programme.	None required.	Board hardware installed, commissioned and tested. Board to carry out Clinical Clean in accordance with the Final Commissioning Programme.

APPENDIX B – COMPLETION CRITERIA

1. GENERAL

1.1 General Requirements

1.1.1 The Contractor shall provide such labour, materials, stores, test equipment, tools, instruments, apparatus and assistance as are reasonably required for the purpose of any inspection and where appropriate testing by the Independent Tester, and shall be responsible for the provision of such electricity, fuel, water and other consumables and materials as may be reasonably required for the same. Invitations shall be furnished by the Contractor to each of the Independent Tester, Project Co, the Board and its technical advisers and the Funder's Technical Adviser to witness such inspections, testing and commissioning activities of the Works as the Project Co or the Board deems necessary at least fourteen (14) Business Days' prior to the date of any such inspections, testing and commissioning activities of the Works. If the Board and/or its technical advisers are unable to attend such inspections, testing and commissioning activities of the Works then the Independent Tester shall carry out such inspections, testing and commissioning activities of the Works at the date previously notified to the Project Co and the Board.

1.1.2 The Contractor shall ensure that major items of Plant shall be tested during the Works for both performance and safety prior to dispatch and provide documentary evidence that testing has been carried out if requested by the Independent Tester. For the purposes of this paragraph "major items of Plant" shall include, but not be limited to, boilers, air handling units, generators, chillers, HV/MV switchgear and pressure vessels. The Contractor shall arrange for each of the Board, its technical advisers, the Project Co and the Funder's Technical Adviser and the Independent Tester to witness specific unit factory testing of major items of Plant and shall furnish the Board, its technical advisers, the Project Co and the Funder's Technical Adviser and the Independent Tester with the opportunity to witness all such factory testing. The Board, its technical advisers, the Project Co and the Funder's Technical Adviser and the Independent Tester shall be given at least fourteen (14) Business Days' prior notice, or such reasonable notice as may be agreed, of such testing of major items of Plant. If the Board and/or or its technical advisers are unable to attend such testing of major items of Plant the Independent Tester shall carry out such testing of major items of Plant at the date previously notified to the Board.

2. WORKS INSPECTION, TESTING AND ACCEPTANCE ACTIVITIES

2.1 Completion Criteria

The Contractor shall demonstrate that the following criteria (the **"Completion Criteria"**) has been achieved:

2.1.1 The building is structurally complete, all external fabric is complete, wind and watertight and air pressure testing complete. Internally all the finishes are complete in accordance with the Room Data Sheets;

2.1.2 The Joint between the Link Building and the Facilities has been constructed in accordance with this Agreement;

2.1.3 All incoming Utilities including but not limited to power, water, gas and all relevant back up systems are tested, commissioned and operational;

2.1.4 All mechanical and electrical Plant and systems shall be tested, commissioned and operate satisfactorily in accordance with the specified design criteria, any manufacturers' operating requirements and the Room Data Sheets;

2.1.5 The building management system is complete, tested, commissioned and operational including the setting up of graphs, logs or equivalent;

2.1.6 All furniture and Equipment shown on the loaded room layout drawings (as supplemented by Schedule Part 11 (*Equipment*) as the Contractor's responsibility have been installed (and commissioned if appropriate);

2.1.7 All keys, access cards, access codes and other access devices along with any associated suiting, for access to all relevant areas of the Facilities, complete with all relevant schedules, including agreed suiting schedules are ready for handover to the Board;

2.1.8 Safe access and egress to and within the Facilities has been established;

2.1.9 The Works shall be free from all surplus materials, plant and equipment and shall comply with the standards and requirements of paragraph 3 (*Handover Clean*);

2.1.10 All internal, external and below ground drainage systems are installed and are operational including connections to the drainage as operated by Consort;

2.1.11 All external works as appropriate have been completed and are available for use by the Board;

2.1.12 All hard-landscaped external works, including roads, car parks, pavements and boundary walls/fences are complete and available for use by the Board;

2.1.13 All lift systems are complete, commissioned and operational; including connection and monitoring of lift car emergency call device;

2.1.14 All, building, directional, departmental, general information, room numbering and external signage as indicated within Project Co's Proposals and/or Reviewable Design Data and necessary to allow the operational Services to commence has been provided and installed. This includes both internal and external signage for the Facilities and areas outwith the Site to include the access routes and buildings on the Retained Site;

2.1.15 Those elements of the fire management strategy and fire safety risk assessment in accordance with the Fire (Scotland) Act 2005, for which Project Co is responsible, have been produced;

2.1.16 All fire detection, alarm and suppression systems including the interconnection with the existing RIE Facilities are complete, tested commissioned and operational;

2.1.17 All external lighting including specialist lighting for the helipad, is installed, tested, commissioned and operational;

2.1.18 All IT, communication and security systems to be installed by the Contractor including the interconnection with the existing RIE Facilities (where relevant), are complete, tested and test results submitted to the each of the Project Co, the Funder's Technical Adviser and the Board (and if appropriate commissioned);

2.1.19 All security and surveillance systems, access controls and call alarms are complete, tested, commissioned, operational and available for use by the Board;

2.1.20 All acoustic testing has been completed to prove compliance with the Board's Construction Requirements and Project Co's Proposals;

2.1.21 All medical gas and vacuum systems are complete, tested, commissioned and witnessed by the Board's chief pharmacist and medical gases approved person;

2.1.22 All pneumatic tube systems including the elements within the RIE Facilities are complete, tested, commissioned, operational and available for use by the Board;

2.1.23 The Contractor has provided all documentation to the Independent Tester in accordance with this Agreement and paragraph 4 *(Indicative Testing and Commissioning Documentation)* below;

2.1.24 A final draft Operational Manual for the Facilities, in accordance with Clause 18.5 *(Operational Manuals)* of this Agreement, (containing, as a minimum, all the testing and commissioning information including as-built drawings / test results so far as it is reasonably practicable) have been made available by the Contractor to Project Co to allow the Facilities to be operated safely;

2.1.25 All tests undertaken in accordance with Section 7 *(Thermal and Energy Efficiency Testing Procedure)* of Schedule Part 6 (*Construction Matters*);

2.1.26 All elements of the Handover Clean, set out in paragraph 3 (*Handover Clean)* below are complete;

2.1.27 Testing and commissioning of all access systems;

2.1.28 Project Co shall ensure the following finishing Works are completed;

(a) Removal of Site establishment;

(b) Cap off and completely remove temporary site services and record position;

(c) Removal of temporary materials, including surfacing, complete with full reinstatement; and

2.1.29 Project Co shall reinstate any damage to Car Park E and/or the relevant part and/or any service media, buildings, structures and others erected thereon and any plant, machinery and equipment at Car Park E in accordance with paragraph 3 of Part 3 (*General Matters*) and shall comply with the requirements in paragraphs 3 and 4 of Part 3 (*General Matters*) of Schedule Part 31 *(Consort Interface with Campus Site and/or Campus Facilities)* of the Project Agreement;

2.1.30 Project Co shall demonstrate that the following areas shall comply with the requirements of paragraph 8.60 of SHTM 03-01 for conventional operating rooms:

(a) Operating Theatre suites including;
   i. Anaesthetic room;
   ii. Theatre;
   iii. Preparation room;
   iv. Scrub up room; and
   v. Utility room.

(b) Digital Angiography including:
   i. Procedures room;
   ii. Control room; and
   iii. Sterile supplies.

(c) Intra Operative MRI including:
   i. MRI room;
   ii. Clean utility;
   iii. MRI control room; and
   iv. Induction area.

The aforementioned areas are as defined in the Schedule of Accommodation;

2.1.31 The Contractor shall provide completed Section 6 (*Room Data Sheets*) of Schedule Part 6 (*Construction Matters*) for all rooms and areas within the Facilities including the environmental data contained in the Environmental Matrix. These Room Data Sheets shall be complete in all respects;

2.1.32 The Contractor shall provide Environmental Matrix including Commissioning data test sheets as commissioned in accordance with CIBSE Commissioning Code C and demonstrating compliance with the Environmental Matrix;

2.1.33 To the extent not already provided, the Contractor shall provide the Key Sub-Contractor Collateral Agreements referred to in Clause 57.8.2 of this Agreement together with copies

certified by the Contractor of the sub-contracts for Key Sub-Contractors executed by the parties to such agreements for the relevant sub-contract between the Contractor and each Key Sub-contractor required to provide a Collateral Agreement pursuant to Clause 57.8.2 of this Agreement, and evidence that the professional indemnity insurance (or product liability insurance, in the case of the work package referred to in limb (g) of the definition of "Key Sub-Contractor"), to be maintained by the Key Sub-Contractor in terms of the relevant sub-contract and Collateral Agreement as applicable is in place.

3. HANDOVER CLEAN

On completion of the Works, the Contractor shall remove builders debris, and clean all areas of the Facilities including plant rooms, to the standard defined below:

3.1 Floors

3.1.1 The floor is cleaned to remove paint, plaster, grit and litter, water and other liquids;

3.1.2 The floor is cleaned to remove stains, spots and scuffs;

3.1.3 Inaccessible areas (edges and corners) cleaned to remove grit and lint;

3.1.4 All carpets, vinyl's and the like floor coverings are clean and vacuumed;

3.1.5 Barrier matting zones are vacuumed and wells free of debris;

3.1.6 Toilets, Sinks, Basins, Baths, Taps and Fixtures free of all labels, tape and sticky marks to be removed;

3.1.7 Porcelain, cubicle rails and plastic surfaces are wiped clean;

3.1.8 Metal surfaces, shower screens and mirrors are wiped clean;

3.1.9 Wall tiles and wall fixtures (including dispensers, toilet holders, paper dispensers, grab rails and the like) wiped clean to remove grit;

3.1.10 Inaccessible areas (edges, corners, folds and crevices) are cleaned to remove grit and lint;

3.1.11 All pieces of fixed furniture, equipment and appliances free of all labels, tape and sticky marks and litter, cleaned inside and out;

3.1.12 All high surfaces are wiped clean;

3.1.13 Blinds, curtains, screens including hanging rails, hooks and fixings cleaned to remove all dust and wiped clean;

3.1.14 Shelves, bench tops, cupboards and wardrobes are wiped clean inside and out and are free of litter;

3.1.15 Protective film is removed from all hard surfaces and equipment unless otherwise requested by the Service Provider.

3.2 Low Level Surfaces

3.2.1 Internal walls cleaned to remove paint splashes, grit, soil and graffiti;

3.2.2 Skirtings, covings and the like are cleaned to remove paint or plaster splashes;

3.2.3 Light switches and electrical sockets are wiped clean; and

3.2.4 All windows (glass internal and external), ironmongery, vents window frames and sills are cleaned.

3.3 High Level Surfaces

3.3.1 Walls and ceilings are cleaned to remove plaster splashes, paint splashes, grit, soil, film and graffiti;

3.3.2 Ceilings and light fittings and are cleaned to remove surface markings, dust and dirt;

3.3.3 Doors and doorframes are cleaned to remove grit, soil, and film;

3.3.4 Air vents, grilles and other ventilation outlets are unblocked and cleaned to remove grit, soil, scuffs and other marks; and

3.3.5 Door tracks and door jambs are cleaned to remove grit and other debris.

4. INDICATIVE TESTING AND COMMISSIONING DOCUMENTATION

4.1 Documentation

The following list is indicative of the test documentation expected to be provided

4.1.1 Building warrant completion certificates;

4.1.2 Evidence that all conditions for which Project Co is responsible attached to the detailed Planning Approval have been discharged to the satisfaction of the relevant local authority;

4.1.3 Not Used;

4.1.4 Flushing cleaning and chlorination test certificates;

4.1.5 Boiler Plant manufacturer's factory test and commissioning sheets in accordance with CIBSE Commissioning Code B, including all steam systems;

4.1.6 Ductwork systems pressure test and volume flow rate certificates if appropriate;

4.1.7 Kitchen equipment commissioning certificate if appropriate;

4.1.8 Electrical installation completion and inspection certificates in accordance with (BS 7671 and NICEIC requirements);

4.1.9 Lighting and power certificate of test;

4.1.10 Fire and intruder alarms commissioning certificates, including intruder detection and alarm, access control system(s);

4.1.11 General electrical earth loop and insulation resistance test sheets;

4.1.12 Testing of all hot water service thermostatic mixing valves ("TMV's") in accordance with BS6700 and tests to comply with HSE Document L8 and HGN 'Safe Hot Water and Surface Temperatures;

4.1.13 Emergency lighting completion and test certificates;

4.1.14 Security systems commissioning certificates;

4.1.15 Certificate of soundness testing of gas installation;

4.1.16 Gas pipework pressure test and purge certificates;

4.1.17 Fire suppression system certificates (in accordance with BS6266 and tests to comply with CIBSE Guidance E;

4.1.18 Fire alarm sound record sheets;

4.1.19 Lighting calculation sheets and lux level test results;

4.1.20 Machine (generator/ups etc) specialist commissioning and factory test sheets;

4.1.21 Acoustic test sheets (in accordance with BS EN ISO 717 – 1: 1997);

4.1.22 Lift Commissioning in accordance with BS EN 81;

4.1.23 Lightning protection risk analysis and test/commissioning sheets in accordance with BS EN 62305 (2008);

4.1.24 Works pressure test certificates for all pressure vessels;

4.1.25 Mechanical pipework systems pressure tests;

4.1.26 A/C Equipment performance tests;

4.1.27 Condensate clearance tests for A/C Equipment;

4.1.28 BMS/EMS tests/commissioning records in accordance with CIBSE Commissioning Code C;

4.1.29 Air distribution systems in accordance with CIBSE Commissioning Code A;

4.1.30 Water systems (heating and domestic water) in accordance with CIBSE Commissioning Code W and SHTM 04-01;

4.1.31 Legionella testing (to include an organic check on the incoming mains) within tolerances given in HSE ACOP test sheets;

4.1.32 Domestic water systems bacteriological quality test sheets;

4.1.33 All medical gas and medical and dental vacuum systems test and commissioning certificates as witnessed by the Board's chief pharmacist and medical gases approved person in accordance with SHTM 02-01: Medical gas pipeline systems, Vol 1 - Design, installation, validation and verification;

4.1.34 Anaesthetic gas scavenging system test and commissioning certificates in accordance with SHTM 02-01: Medical gas pipeline systems, Vol 1 - Design, installation, validation and verification;

4.1.35 Plant (Calorific, Treatment etc.) specialist commissioning and factory test sheets, if applicable;

4.1.36 Nurse call test certificate;

4.1.37 Disabled Toilet Alarm test certificate;

4.1.38 Fire Alarm Test Certificate;

4.1.39 CCTV and access control test certificate;

4.1.40 Telephone and data structured cable scheme test certificate, test results and copy of manufacturer's warranty;

4.1.41 Pneumatic tube system test certificate;

4.1.42 Induction loop test certificate;

4.1.43 Pipeline Pressure and flow rate test certificates including drainage and all steam systems;

4.1.44 Steam boiler/generator test factory test and commissioning certificates in accordance with CIBSE Commissioning Code B;

4.1.45 Chiller factory test and commissioning certificates in accordance with CIBSE Commissioning Code R;

4.1.46 Chemical clean and inhibitor dosing certification to heating/chilled water systems;

4.1.47 Ductwork physical cleaning certification in accordance with SHTM 03-01 and the HVCA (2005) 'TR/19 – Guide to good practice;

4.1.48 Proving of isolation rooms differential pressure;

4.1.49 Air tests and test records for the Facilities drains and drainage network;

4.1.50 Test certificates and sufficient written evidence covering the design, construction and repair etc for all protective devices such as pressure relief valves and the like. Specific reference is made to compliance with Regulation 5 of The Pressure Systems Safety Regulations 2000; and

4.1.51 The Contractor has provided documentation relating to the acceptance of the helipad for operation by the CAA and Air Ambulance operators including the lighting and Rescue and Fire Fighting provision.

5. RETAINED ESTATE HANDBACK WORKS COMPLETION CRITERIA.

Prior to handing back the Retained Estate Handback Works to the Board, at a point in the programme agreed to by Project Co, the Contractor shall ensure the following "Retained Estate Handback Works Completion Criteria" have occurred for the Retained Estate Handback Works:

5.1.1 All furniture and Equipment shown on the loaded room layout drawings (as supplemented by Schedule Part 11 (*Equipment*) as Project Co's or the Contractor's responsibility have been installed (and commissioned if appropriate);

5.1.2 Safe access and egress to, from and within land associated with the Retained Estate Handback Works has been established;

5.1.3 The Retained Estate Handback Works shall be free from all surplus materials, plant and equipment;

5.1.4 All external drainage systems associated with the Retained Estate Handback Works are installed and are operational including connections to the drainage as operated by Consort;

5.1.5 All external works as appropriate for the Retained Estate Handback Works have been completed and are available for use by the Board;

5.1.6 All hard-landscaped external works, including roads, pavements and boundary walls/fences within land associated with the Retained Estate Handback Works are complete and available for use by the Board;

5.1.7 All external signage as indicated within Project Co's Proposals and/or Reviewable Design Data and necessary to allow the Retained Estate Handback Works to operate has been provided and installed;

5.1.8 Those elements of the fire management strategy and fire safety risk assessment in accordance with the Fire (Scotland) Act 2005, for which Project Co is responsible, have been provided;

5.1.9 All external lighting as appropriate for the Retained Estate Handback Works is installed, tested, commissioned and operational;

5.1.10 All security and surveillance systems associated with the Retained Estate Handback Works is tested, commissioned, operational and available for use by the Board;

5.1.11 Reinstatement of damage in accordance with paragraph 1 of Part 1 of Schedule Part 31 *(Consort Interface with Campus Site and/or Campus Facilities)* of the Project Agreement insofar as is relevant to the Retained Estate Handback Works.

5.1.12 The Contractor shall ensure the following finishing works are undertaken for land associated with the Retained Estate Handback Works;

(a) Removal of any Site establishment;

(b) Cap off and completely remove temporary site services and record position; and

(c) Removal of temporary materials, including surfacing, complete with full reinstatement.

6. PETROL STATION SITE WORKS COMPLETION CRITERIA

6.1 Prior to notifying the Project Co that the Petrol Station Site Works are in a condition in which they can be handed back to the Board, the Contractor shall ensure the following Petrol Station Site Works Completion Criteria have occurred for the Petrol Station Site Works:

6.1.1 All furniture and Equipment shown on Project Co's Proposals' external works drawings and/or Reviewable Design Data (as supplemented by Schedule Part 11 (*Equipment*)) as Project Co's responsibility have been installed (and commissioned if appropriate);

6.1.2 Safe access and egress to, from and within land associated with the Petrol Station Site Works has been established;

6.1.3 The Petrol Station Site Works shall be free from all surplus materials, plant and equipment;

6.1.4 All external drainage systems associated with the Petrol Station Site Works are installed and are operational including connections to the drainage as operated by Consort;

6.1.5 All external works as appropriate for the Petrol Station Site Works have been completed and are available for use by the Board;

6.1.6 All hard-landscaped external works, including roads, pavements and boundary walls/fences within land associated with the Petrol Station Site Works are complete and available for use by the Board;

6.1.7 All external signage as indicated within Project Co's Proposals and/or Reviewable Design Data and necessary to allow the Petrol Station Site Works to operate has been provided and installed;

6.1.8 Those elements of the fire management strategy and fire safety risk assessment in accordance with the Fire (Scotland) Act 2005, for which Project Co is responsible, have been provided;

6.1.9 All external lighting as appropriate for the Petrol Station Site Works is installed, tested, commissioned and operational;

6.1.10 All security and surveillance systems associated with the Petrol Station Site Works is tested, commissioned, operational and available for use by the Board;

6.1.11 Reinstatement of damage in accordance with paragraph 3 of () of Schedule Part 31 *(Consort Interface with Campus Site and/or Campus Facilities)* of the Project Agreement insofar as is relevant to the Petrol Station Site Works.

6.1.12 The Contractor shall ensure the following finishing works are undertaken for land associated with the Petrol Station Site Works;

(a) Removal of any Site establishment;

(b) Cap off and completely remove temporary site services and record position; and

(c) Removal of temporary materials, including surfacing, complete with full reinstatement.

6.1.13 Remedial measures associated with the proposed public open space land use at the Petrol Station Site Works are completed and shall be independently verified by the Environmental Consultant and certified in accordance with the City of Edinburgh Council Planning Requirements and Regulations.

6.1.14 The Contractor shall provide all documentation relating to remediation of the Petrol Station Site Works for proposed temporary uses (e.g. construction access road) and final use as an area of public open space. This shall include contaminated land risk assessments, remedial options appraisal reports, remedial strategy reports, detailed design documents and completion/validation reports produced in line with Part IIA of the Environmental Protection Act (1990) and following best practice guidelines detailed in CLR11 (2004), BS10175:2011+A1:2013 and PAN 33; and

6.1.15 The Contractor shall provide evidence that the ground conditions within the Petrol Station Site Works have not deteriorated as a result of the construction activities.

APPENDIX C: OUTLINE COMMISSIONING PROGRAMME

Appendix C of Schedule Part 10 of the Project Agreement is incorporated into, and forms part of, this Agreement.

SCHEDULE PART 11

EQUIPMENT

1. GROUP 1 EQUIPMENT

1.1 Subject to paragraph 1.3, the Contractor shall at its own cost procure, install and commission the Group 1 Equipment at the Facilities as part of the Works in accordance with the Board's Construction Requirements, the Final Commissioning Programme, Project Co's Proposals and any other relevant provisions of this Agreement.

1.2 The Contractor shall, as required by Clause 17A, at its own cost repair and/or replace, the Group 1 Equipment in accordance with the requirements specified in paragraph 1.1 above.

1.3 Project Co shall procure that the Board shall at the Board's own cost install and commission or procure the installation and the commissioning of Group 1 Equipment set out in the rooms referred to in Appendix 6 (*Board's installation responsibility for rooms with Group 1 Equipment*).

1.4 If at the time of the Board installing the Group 1 Equipment referred to in paragraph 1.3 above, such Group 1 Equipment is:

1.4.1 damaged by the Board; or

1.4.2 is defective or does not properly function due to the acts or omissions of the Board or any Board Party, then the Contractor shall repair or replace such Group 1 Equipment and, subject to Clause 75 (*Overriding Entitlements*) Project Co shall reimburse the Contractor for any costs reasonably and properly incurred by the Contractor in repairing or replacing any item of Group 1 Equipment referred to in paragraph 1.3 above within twenty-two (22) Business Days of receipt of a demand thereof together with supporting information, provided that, to avoid doubt, where such Group 1 Equipment referred to in paragraph 1.3 above is damaged or is defective or does not function properly to occur due to the acts or omissions of the Contractor or any Contractor Party, then the costs associated with any repair and/or replacement of Group 1 Equipment referred to in paragraph 1.3 above shall be borne by the Contractor .

1A NOT USED

1B NOT USED

1C Not Used

1D Not Used

1E Not Used

2. GROUP 2A EQUIPMENT

2.1 Project Co shall procure that the Board shall at the Board's own cost:

2.1.1 procure and make available the Group 2A Equipment for installation by the Contractor at the Facilities in accordance with the Final Commissioning Programme; and

2.1.2 without prejudice to paragraph 2.1.1, ensure that the relevant items are delivered to the Facilities during the relevant periods set out in the Final Commissioning Programme and in accordance with paragraph 2.6.

2.2 The Contractor shall install the Group 2A Equipment at the Facilities in accordance with the Final Commissioning Programme, the Board's Construction Requirements and Project Co's Proposals and the provisions of Clause 17 A shall apply to the Group 2A Equipment.

2.3 Not Used.

2.4 The Contractor shall give the Board not less than three (3) Months prior written notice of the date upon which the Contractor requires the Board to procure the delivery of Group 2A Equipment to be installed and commissioned by the Contractor in accordance with paragraph 2.2. Each notice given under this Paragraph 2.4 shall state that it is given on behalf of Project Co and shall be copied simultaneously to the Project Co Representative.

2.5 Each notice given pursuant to paragraph 2.4 shall specify;

2.5.1 the item or items of Group 2A Equipment to be delivered by the Board;

2.5.2 the location on the Site to which that Group 2A Equipment is to be delivered by the Board; and

2.5.3 the date upon which the Contractor requires the Board to deliver the relevant item or items of Group 2A Equipment.

2.6 Without prejudice to paragraph 2.1, Project Co shall procure that the Board shall deliver, or shall procure delivery of the relevant item or items of and/or pertaining to the Group 2A Equipment on the date specified in the relevant notice issued by the Contractor pursuant to paragraph 2.4 to such location as set out in paragraph 2.5.2 (which for the avoidance of doubt, must be safely accessible by those persons delivering the relevant item or items of Equipment).

2.7 Following delivery of the Group 2A Equipment pursuant to paragraph 2.6, the Contractor shall procure the safe and appropriate storage of the same until the completion of installation of the Group 2A Equipment by the Contractor.

2.8 If at the time of installing or commissioning the Group 2A Equipment, such Group 2A Equipment is found to be damaged, does not properly function or otherwise does not correspond with the items to be procured by the Board pursuant to paragraph 2.1 to allow successful completion of commissioning to occur, then Project Co shall procure that the Board shall procure the repair or replacement of such Group 2A Equipment as soon as reasonably practicable, having regard to the length of time generally taken to procure such Group 2A Equipment or procure repairs to such Group 2A Equipment provided that, to avoid doubt, where such Group 2A Equipment is damaged or does not function properly to allow commissioning to occur due to the acts or omissions of the Contractor or any Contractor Party, then the Contractor shall reimburse the Project Co for any costs reasonably and properly incurred by the Board in procuring the repair of a replacement item of Group 2A Equipment within eighteen (18) Business Days of receipt of a demand thereof together with supporting information.

3. GROUP 2B EQUIPMENT

3.1 Project Co shall procure that the Board shall at the Board's own cost:

3.1.1 procure the Group 2B Equipment for installation by its own contractors at the Facilities in accordance with the Final Commissioning Programme; and

3.1.2 without prejudice to paragraph 3.1.1, ensure that the Group 2B Equipment is delivered to and installed at the Facilities during the relevant periods set out in the Final Commissioning Programme in accordance with paragraph 3.6.

3.2 Project Co shall procure that the Board shall procure the installation of the Group 2B Equipment at the Facilities in accordance with the Final Commissioning Programme, the Board's Construction Requirements and Project Co's Proposals.

3.3 Not Used.

3.4 The Contractor shall give the Board not less than twenty-five (25) Business Days prior written notice to the Board's Representative of the date upon which the Contractor requires the Board to procure the delivery and installation of the Group 2B Equipment by the Board and its contractors in accordance with paragraph 3.2. Each notice given under this Paragraph 3.4 shall state that it is given on behalf of Project Co and shall be copied simultaneously to the Project Co Representative.

3.5 Each notice given pursuant to paragraph 3.4 shall specify;

3.5.1 the item or items of Group 2B Equipment be delivered and installed by the Board;

3.5.2 the location on the Site to which that Group 2B Equipment is to be delivered and installed by the Board; and

3.5.3 the date upon which the Contractor requires the Board to deliver and install the relevant item or items of Group 2B Equipment.

3.6 Without prejudice to paragraph 3.1, Project Co shall procure that the Board shall deliver, or shall procure delivery of the relevant item or items of and/or pertaining to the Group 2B Equipment on the date specified in the relevant notice issued by the Contractor pursuant to paragraph 3.4 to such location as set out in paragraph 3.5.2 (which for the avoidance of doubt, must be safely accessible by those persons delivering the relevant item or items of Equipment).

3.7 Following delivery of the Group 2B Equipment pursuant to paragraph 3.6, the Contractor shall procure the safe and appropriate storage of the same until the completion of installation by or procured by the Board.

3.8 If at the time of installing or commissioning the Group 2B Equipment, such Group 2B Equipment is found to be damaged, does not properly function or otherwise does not correspond with the items to be procured by the Board pursuant to paragraph 3.1 to allow successful completion of commissioning to occur, then Project Co shall procure the Board shall procure the repair or replacement of such Group 2B Equipment as soon as reasonably practicable, having regard to the length of time generally taken to procure such Group 2B Equipment or procure repairs to such Group 2B Equipment provided that, to avoid doubt, where such Group 2B Equipment Is damaged or does not function properly to allow commissioning to occur due to the acts or omissions of the Contractor or any Contractor Party, then the Contractor shall reimburse the Project Co for any costs reasonably and properly incurred by the Board in procuring the repair of a replacement item of Group 2B Equipment within eighteen (18) Business Days of receipt of a demand thereof together with supporting information.

4. GROUP 3 EQUIPMENT

4.1 Without prejudice to paragraph 1, Project Co shall procure that the Board shall at its own cost procure, install and commission the Group 3 Equipment at the Facilities as part of the Board's Post Completion Commissioning.

4.2 If such Group 3 Equipment is damaged or does not function properly to allow commissioning to occur due to the acts or omissions of the Contractor or any Contractor Party, then the Contractor shall reimburse the Project Co for any costs reasonably and properly incurred by the Board in procuring the repair of a replacement item of Group 3 Equipment within eighteen (18) Business Days of receipt of a demand thereof together with supporting information.

5. GENERAL

5.1 Each Party shall at its own expense perform its obligations described in this Schedule Part 11 (*Equipment*).

6. EQUIPMENT SCHEDULE

Refer to the disc that is identified as the disc in the Agreed Form containing 1 (*Equipment Schedule*) of Schedule Part 11 (*Equipment*) of the Project Agreement which is incorporated into, and forms part of, this Agreement.

APPENDIX 3

Not Used

APPENDIX 4

Board Specified Group 1 Equipment

Item	Code	Quantity	Description	Group
1	AUT900	1	Autoclave	1
2	CAB200	2	CABINET: Class II tissue culture cabinet	1
3	CAN010	7	CANOPY: ultra clean ventilation (UCV) operating theatre, 2000mm clear from floor level to underside, 3200W x3200D, sliding screens.	1
4	HOI006	45	HOIST PATIENT; electric; 24V; straight track ceiling mounted (Length of the track to suit the individual needs).	1
5	HOI906	4	HOIST PATIENT; BARIATRIC, electric; 24V; H-frame track ceiling mounted. (Length of the track to suit the individual needs.)	1
6	HOI907	75	HOIST, patient, electric, 24V, H-frame track ceiling mounted. (Length of the track to suit the individual needs)	1
7	LIG2502	4	LUMINAIRE; double arm; operating theatre; table with satellite; shadowless; lux 140000 and lux 110000.	1
8	LIG2505	6	LIGHT; Operating 3 arm	1
9	LIG2506	6	LIGHT; green blue light source.	1
10	LSU003	1	SINK laboratory; 300H 450W 420D; HTM67/S3.	1
11	PAN053	10	PANEL operating theatre; to meet the theatre requirements.	1
12	PEN002	35	PENDANT; Anaesthetic; medical & power supply unit; vertical movement; ceiling mounted; outlets comprising.	1
13	PEN006	2	PENDANT SURGICAL; touch screen monitor; medical and power supply unit; lateral and vertical movement; ceiling mounted; outlets comprising:	1
14	PEN006A	4	PENDANT SURGICAL; medical and power supply unit; lateral and vertical movement; ceiling mounted; outlets comprising:	1
15	PEN1000L	20	PENDANT; critical care; twin arm; left hand monitor arm, with elbow joints; multi movement.	1
16	PEN1004	24	PENDANT; critical care; CIS; single arm with elbow joints; multi movement (to NHSL specification).	1
17	PEN1005	4	PENDANT; critical care; single arm (to NHSL specification).	1
18	PEN2504	1	PENDANT; Anaesthetic; medical & power supply unit; vertical movement; ceiling mounted; outlets comprising:	1
19	PEN900	8	PENDANT RESUSCITATION, medical gases and power supply unit, fixed location, ceiling mounted, medical gases and power outlets comprising:	1

APPENDIX 5

Board Specified Group 1 Equipment Specifications

Refer to the disc that is identified as being the disc in Agreed Form containing Appendix 5 (*Board Specified Group 1 Equipment Specifications*) of Schedule Part 11 (*Equipment*) of the Project Agreement which is incorporated into, and forms part of, this Agreement.

APPENDIX 6

Board's installation responsibility for rooms with Group 1 Equipment

Ref	Department	Sub Department	Room No	Room Name	Comment
C2	RHSC Wards Support Areas		3-C2-002	Grab & Go	
D05	Paediatric Dentistry		G-D5-002	Laboratory	
D05	Paediatric Dentistry		G-D5-004	Surgery - Multi-Disciplinary	
D05	Paediatric Dentistry		G-D5-008	Surgery - Standard	
D05	Paediatric Dentistry		G-D5-009	Surgery - Standard	
D05	Paediatric Dentistry		G-D5-010	Surgery - Standard	
I1	RHSC Entrance		G-I1-006	Retail Shop	
I1	RHSC Entrance		G-I1-007	Catering Shop	
K1	Family Support		G-K1-022	Radio Lollipop Broadcasting Studio	
N2	DCN Wards / Health Records Support		2-N2-003	Grab & Go	
P1	Theatres & RHSC SDCU	Intra Operative MRI	1-P1-064	MRI Room	Clarification re group 1 items to be issued to NHSL sub-contractor provided in Transmittal 000052.
P1	Theatres & RHSC SDCU	Digital Angiography	1-P1-093	Angiography Procedures Room	Clarification re group 1 items to be issued to NHSL sub-contractor provided in Transmittal 000052.
Q1	Radiology	RHSC Main Department	G-Q1-016	Screening Room (fluoroscopy)	Clarification re group 1 items to be issued to NHSL sub-contractor provided in Transmittal 000052.
Q1	Radiology	Gamma Camera	G-Q1-039	Gamma Camera 1	Clarification re group 1 items to be issued to NHSL sub-contractor provided in Transmittal 000052.
Q1	Radiology	Gamma Camera	G-Q1-044	Gamma Camera 2	Clarification re group 1 items to be issued to NHSL sub-contractor provided in Transmittal 000052.
Q1	Radiology	DCN CT	G-Q1-059	CT Room	Clarification re group 1 items to be issued to NHSL sub-contractor provided in Transmittal

					000052.
Q1	Radiology	DCN MRI (NHS 2 Scanners)	G-Q1-110	MRI Room	Clarification re group 1 items to be issued to NHSL sub-contractor provided in Transmittal 000052.
Q1	Radiology	DCN MRI (NHS 2 Scanners)	G-Q1-123	MRI Room	Clarification re group 1 items to be issued to NHSL sub-contractor provided in Transmittal 000052.
Q1	Radiology	RHSC MRI/CT	G-Q1-134	MRI Room	Clarification re group 1 items to be issued to NHSL sub-contractor provided in Transmittal 000052.
Q1	Radiology	RHSC MRI/CT	G-Q1-136	CT Room	Clarification re group 1 items to be issued to NHSL sub-contractor provided in Transmittal 000052.
Q1	Radiology	RHSC Main Department	G-Q1-141	Dental Room	Clarification re group 1 items to be issued to NHSL sub-contractor provided in Transmittal 000052.

SCHEDULE PART 12

SERVICE REQUIREMENTS

SECTION 1

[NOT USED]

SECTION 2

[NOT USED]

SECTION 3

[NOT USED]

SECTION 4

ENERGY STRATEGY

Refer to the disc that is identified as the disc in Agreed Form containing Section 4 (*ENERGY STRATEGY*) of Schedule Part 12 (*Service Requirements*) of the Project Agreement which is incorporated into, and forms part of, this Agreement.

SCHEDULE PART 13

INDEPENDENT TESTER CONTRACT

AGREEMENT

AMONG:

(1) **LOTHIAN HEALTH BOARD**, a health board constituted in Scotland under the National Health Service (Constitution of Health Boards) (Scotland) Order 1974 (S.I. 1974/267) as amended by the National Health Service (Constitution of Health Boards) (Scotland) Amendment Order 2003 (S.S.I. 2003/217) pursuant to Section 2 of the National Health Service (Scotland) Act 1978 as amended by section 28 of the National Health Service and Community Care Act 1990 and having its principal address at Waverley Gate, 2-4 Waterloo Place, Edinburgh EH1 3EG (together with its successors, assignees and/or transferees is referred to as the "**Board**");

(2) **IHS LOTHIAN LIMITED** (registered under number SC493676 whose registered office is at Business Paull LLP, 50 Lothian Road, Festival Square, Edinburgh EH3 9WJ) ("**Project Co**");

(3) **EC HARRIS LLP** (registered under number OC368843 whose registered office is at EC HQ, 34 York Way, London N1 9AB) (the "**Independent Tester**");

(4) **PRUDENTIAL TRUSTEE COMPANY LIMITED**, as agent and trustee for and on behalf of the Secured Creditors ("the **Security Trustee**"); and

(5) **M&G INVESTMENT MANAGEMENT LIMITED**, as agent for and on behalf of the European Investment Bank, The Prudential Assurance Company Limited, Prudential Retirement Income Limited, Hold Co and Top Co (the "**Intercreditor Agent**"); and

(6) **BROOKFIELD MULTIPLEX CONSTRUCTION EUROPE LIMITED** (registered under number 03808946) whose registered office is at 99 Bishopsgate, Second Floor, London, EC2M 3XD (the "**Contractor**").

WHEREAS:

(A) Project Co and the Board have entered into an agreement for the financing, design and construction of and the provision of certain services in connection with a project to re-provide services from the Royal Hospital for Sick Children, Child and Adolescent Mental Health Service and the Department of Clinical Neurosciences in a single building adjoining the Royal Infirmary of Edinburgh at Little France at the Site and Off-Site (the "**Project**") pursuant to the Government's private finance initiative (the "**Project Agreement**") under the terms of which they have jointly agreed to appoint an independent tester.

(B) Project Co has entered into the Construction Contract with the Contractor for the development of the Project at the Site and Off-Site.

(C) Project Co has entered into the Senior Funding Agreements with the Funders.

(D) The Independent Tester is an independent adviser willing to provide services to Project Co and the Board and for the benefit of the Secured Creditors and the Funders.

(E) Project Co and the Board have jointly agreed to engage the Independent Tester to carry out the duties and obligations ascribed to the Independent Tester in the Project Agreement upon the terms of this Agreement.

IT IS AGREED as follows:

1 INTERPRETATION

1.1 Unless the context otherwise requires, words and expressions defined in the Project Agreement have the same meanings in this Agreement as in the Project Agreement.

"**Completion Process**" means the process and procedures for carrying out the notification, testings, inspections and completion certification as set out in Schedule Part 10 *(Outline Commissioning Programme)* of the Project Agreement as may be applicable to the Works.

1.2 The headings in this Agreement do not affect its interpretation.

Unless the context otherwise requires, all references to Clauses and Appendices are references to clauses of and appendices to this Agreement.

2 APPOINTMENT

2.1 Project Co and the Board jointly appoint the Independent Tester to perform the services obligations and tasks which are ascribed to the Independent Tester under the Project Agreement and which are set out in Appendix 1 upon the terms and conditions set out below. The Contractor is a party to this Agreement solely to make the commitments on its part as expressly made in this Agreement and, for the avoidance of doubt, the Independent Tester shall have no liability to the Contractor.

2.2 The Independent Tester shall provide the services, obligation and tasks under Clause 2.1 above (the "**Services**") independently, fairly and impartially to and as between Project Co and the Board in relation to the Project Agreement at such times and at such locations as the parties shall agree from time to time. In performing the Services in accordance with the terms of this Agreement, the Independent Tester shall have regard to the interest of and shall perform the same for the benefit of and with a duty of care to the Funders, the Secured Creditors, the Security Trustee and the Intercreditor Agent. Whilst the Independent Tester shall take account of any representations made by Project Co and the Board and the Contractor (as appropriate) the Independent Tester shall not be bound to comply with any representations made by any of them in connection with any matter on which the Independent Tester is required to exercise his professional judgement.

3 VARIED SERVICES

3.1 The Independent Tester shall carry out and perform any additional and/or varied services required for the implementation of the Project reasonably required by the Board and Project Co which are not included in, or which are omitted from, the Services (the "**Varied Services**"), subject to prior agreement by the Board and Project Co to the costs thereof. The written agreement by the Board and Project Co pursuant to this Clause 3.1 shall state whether (and where applicable in what proportions) the Board and/or Project Co will be responsible for the payment of the fee agreed for the Varied Services. The Independent Tester acknowledges that the liability of Project Co and the Board to pay the Independent Tester for the Varied Services shall be several and not joint.

3.2 If the Independent Tester shall at any time be required to perform Varied Services, it shall give to the Board and Project Co a written estimate of the cost thereof (taking into account any reduction in work or other expense which might also occur as a result of the circumstances giving rise to the Varied Services).

3.3 Where a change to the Project occurs pursuant to the terms of the Project Agreement (whether by virtue of a Delay Event, Change, change to the Programme or otherwise) which may materially impact on the Services or otherwise on the Independent Tester, the Board and Project Co shall promptly notify the Independent Tester of such change. The Independent Tester shall within five (5) Business Days of receiving such notification, notify the Board and Project Co of the impact of such change, if any, on the Services, including whether such change gives rise to any Varied Services and the provisions of this Clause 3.3 shall apply accordingly.

3.4 The Independent Tester shall promptly and efficiently provide the Services and the Varied Services:

3.4.1 with the reasonable care, skill and diligence to be expected of a properly qualified and competent professional adviser who has held itself out as competent and experienced in rendering such services for projects of a similar size, nature, scope and complexity to the Project; and

3.4.2 in accordance with all applicable Law and NHS Requirements.

3.5 All instructions to the Independent Tester must be given signed and given jointly by the Board's Representative and Project Co's Representative or such other person appointed pursuant to Clause 8 (*Representatives*) of the Project Agreement and, for the avoidance of doubt, the Independent Tester shall not act in accordance with any instructions given to him by either the Board or Project Co (or any other person) not given in accordance with the provisions of this Clause 3.5.

3.6 The Independent Tester shall comply with all reasonable instructions given to it by Project Co and the Board pursuant to Clause 3.5 except and to the extent that the Independent Tester reasonably considers that any such instructions vary or might vary the Services or its authority or responsibilities under this Agreement or prejudices or might prejudice the exercise by the Independent Tester of its professional judgement in accordance with Clauses 2.2 and 3.4 above. The Independent Tester shall promptly confirm in writing to Project Co and the Board whether or not it shall comply with any such instruction setting out the grounds upon which the decision is made.

3.7 The Board, Project Co and the Contractor agree to co-operate with and provide reasonable assistance to the Independent Tester to familiarise the Independent Tester with all necessary aspects of the Project to enable the Independent Tester to carry out its obligations under this Agreement.

3.8 The Independent Tester shall be deemed to have full knowledge of the provisions of the Project Agreement, the Construction Contract, the Service Contracts, the Senior Funding Agreements and the Interface Agreement (as defined in the Construction Contract) such as relates to the Services and shall be deemed to be aware of and to have taken full account of all the undertakings and warranties, both expressed and implied, on the part of Project Co and the Board which are set out in the Project Agreement provided always that true and accurate copies have been delivered to the Independent Tester.

3.9 Subject to Clause 3.10, the Independent Tester shall use the following partners, directors or employees: Ed Baldwin – Partner, John Edwards – Lead Independent Tester, Christian Darbyshire – Independent Tester, Glen Thompson – Independent Tester, Gio Credali – Independent Tester, in connection with the performance of the Services and such persons' services shall be available when necessary and for so long as may be necessary to ensure the proper performance by the Independent Tester of the Services. Such persons shall have full authority to act on behalf of the Independent Tester for all purposes in connection with the Services.

3.10 The Independent Tester may by written notice to the Board and Project Co replace the staff identified in Clause 3.9 taking into account the need for liaison, continuity, level of qualification and availability of personnel in respect of the Project. Such replacement shall be subject to approval in writing by Project Co and the Board (not to be unreasonably withheld or delayed).

4 DURATION

4.1 The Services shall commence on the last date of execution of the Project Agreement

4.2 The parties hereby agree that this Agreement governs all of the Services (including the Varied Services, if any) provided by the Independent Tester in relation to the Project whether before or after the date hereof.

5 FEE

5.1 Project Co shall pay to the Independent Tester a fee of [one hundred and ninety thousand five hundred and twenty pounds (£190,520.00)] for the Services provided under this Agreement. The fee is exclusive of value added tax and inclusive of disbursements. The Independent Tester shall issue an invoice to Project Co on a monthly basis in accordance with Appendix 2 Section 1 (*Schedule of Drawdown of Fees*) (the "**Application for Payment**"). Five (5) days after the date on which the invoice is received by Project Co shall constitute the due date (the "**Due Date**"). The final date for payment by Project Co shall be thirty (30) days after receipt of the Independent Tester's invoice (the "**Final Date**"). If Varied Services are provided then they shall be paid for in accordance with the agreement between the Independent Tester and the Board and Project Co pursuant to Clause 3.1.

5.2 Not later than five (5) days after the Due Date ascertained in accordance with Clause 5.1, Project Co shall give written notice to the Independent Tester stating the amount which Project Co considers to be or have been due at the Due Date and the basis on which the amount is calculated (the "**Payment Notice**"). It is immaterial that the sum referred to in this notice may be zero. If Project Co fails to give a Payment Notice in accordance with this Clause 5.2 and the Independent Tester has given an Application for Payment in accordance with Clause 5.1, subject to any Pay Less Notice given under Clause 5.3, the sum to be paid to the Independent Tester shall be the sum specified in the Application for Payment.

5.3 Where Project Co intends to pay less than the sum stated as due pursuant to this Agreement, Project Co shall, not later than two (2) days before the relevant Final Date, give a written notice to the Independent Tester (a "**Pay Less Notice**"). Such Pay Less Notice shall specify both the sum that Project Co considers to be due to the Independent Tester at the date the notice is given and the basis on which that sum is calculated. It is immaterial that the sum referred to in this Clause 5.3 may be zero. Where any Pay Less Notice is given, the payment to be made on or before the relevant Final Date shall be not less than the amount stated as due in such notice.

5.4 If Project Co fails to pay a sum, or any part of it, properly due to the Independent Tester under this Agreement by the relevant Final Date, Project Co shall, in addition to any unpaid amount that should properly have been paid, pay the Independent Tester simple interest on that amount from the Final Date until the actual date of payment at the Default Interest Rate.

5.5 If Project Co fails to pay any amount properly due pursuant to this Agreement by the relevant Final Date and the failure continues for twenty one (21) days after the

Independent Tester has given notice to Project Co of its intention to suspend performance of all or any of the Services and the ground or grounds on which it is intended to suspend performance, the Independent Tester may suspend performance of any or all of its obligations until payment of the amount properly due is made in full. Any period of suspension of the Services in accordance with this Clause 5.5 shall be disregarded in computing any contractual time limit to complete work directly or indirectly affected by the exercise of the rights conferred by this Clause 5.5 or as the case may be, the time for completion of such work shall be extended by a period equal to the period of suspension.

Where the Independent Tester exercises its right of suspension under this Clause 5.5, it shall be entitled to a reasonable amount in respect of costs and expenses reasonably incurred by it as a result of the exercise of that right. Any such costs and expenses shall be included in the Independent Tester's next Application for Payment and the Independent Tester shall, with its application, submit such details of the costs and expenses as are reasonably necessary to enable the Independent Tester's entitlement to be ascertained.

5.6 Without prejudice to Clause 3.5, neither the Board nor Project Co shall issue instructions or do anything which does or is reasonably likely materially to increase the fees payable to the Independent Tester without the prior approval of the other (such approval not to be unreasonably withheld or delayed).

5.7 As soon as the Independent Tester becomes aware of the same and before acting on the same the Independent Tester shall inform the Board and Project Co of any instructions given to him pursuant to Clause 3.5 which will or could reasonably be expected to increase the fees payable to the Independent Tester under the terms of this Agreement. The Independent Tester shall if requested by either Project Co or the Board provide both the Board and Project Co with as detailed an estimate as is reasonably practicable of the increase to the fees payable to it if it carries out such instructions. The estimate of increased fees shall be based upon the rates contained in Appendix 2, Section 2 (*Schedule of Daily Rates*).

6 LIMITATIONS ON AUTHORITY

6.1 The Independent Tester shall not:

6.1.1 make or purport to make any alteration or addition to or omission from the design of the Facilities and/or the Retained Estate Handback Infrastructure, (including, without limitation, the setting of performance standards) or issue any instruction or direction to any contractor or professional consultant employed or engaged in connection with the Project; or

6.1.2 (unless both Project Co and the Board consent in writing) consent or agree to any waiver or release of any obligation of Project Co or the Board under the Project Agreement or of any contractor or professional consultant employed or engaged in connection with the Project.

6.2 For the avoidance of doubt, the Independent Tester shall not express an opinion on and shall not interfere with or give any advice, opinion or make any representation in relation to any matters which are beyond its role and responsibilities under this Agreement.

7 TERMINATION

7.1 Project Co and the Board may by joint notice in writing (a "**Joint Notice**") immediately terminate this Agreement if the Independent Tester:

7.1.1 is in breach of any of the terms of this Agreement which, in the case of a breach capable of remedy, shall not have been remedied by the Independent Tester within twenty one (21) days of receipt by the Independent Tester of a Joint Notice specifying the breach and requiring its remedy;

7.1.2 is incompetent, guilty of gross misconduct and/or any material failure, negligence or delay in the provision of the Services and/or its other duties under this Agreement;

7.1.3 fails or refuses after written warning to provide the Services and/or its other duties under this Agreement reasonably and as properly required of him; or

7.1.4 is subject to an event analogous to any of the events set out in Clause 40.1.1 (*Insolvency*) of the Project Agreement.

7.2 If the Project Agreement is rescinded, terminated or repudiated for any reason and, notwithstanding that the validity of such rescission, termination or repudiation may be disputed, this Agreement may be terminated by Joint Notice and with immediate effect.

7.3 Following any termination of this Agreement, but subject to any set-off or deductions which Project Co or the Board may be entitled properly to make as a result of any breach of this Agreement by the Independent Tester, the Independent Tester shall be entitled to be paid in full and final settlement of any valid claim which the Independent Tester may have in consequence thereof, any fees due under Clause 5 (*Fee*) above in respect of the Services carried out in accordance with this Agreement prior to the date of termination.

7.4 Termination of this Agreement shall be without prejudice to any accrued rights and obligations under this Agreement as at the date of termination (including the right of Project Co and the Board to recover damages from the Independent Tester).

7.5 If this Agreement is terminated in accordance with Clause 7.1,.Project Co and the Board shall use reasonable endeavours to engage an alternative Independent Tester within thirty (30) days, subject to Law and public procurement rules. If within such period Project Co and the Board are unable to procure the appointment of an alternative Independent Tester on reasonable commercial terms, the Independent Tester shall pay to Project Co and/or the Board, as the case may be, any reasonable incremental loss, damage or extra costs suffered by each of them.

7.6 If Project Co fails to make a payment of any undisputed sum to the Independent Tester within twenty (20) Business Days of the expiry of any notice issued pursuant to Clause 5.5. in respect of such sum, the Independent Tester may issue a further written notice to the Board and Project Co specifying that the payment remains outstanding (the "**Second Notice**") and if payment is not made within fifteen (15) Business Days of receipt of the Second Notice the Independent Tester may issue a further written notice terminating this Agreement with immediate effect. Failure by Project Co to pay, following receipt of a Second Notice pursuant to this Clause 7.6, shall be the Independent Tester's sole ground for terminating this Agreement by reason of breach of this Agreement by the Board and/or Project Co.

7.7 Termination of this Agreement shall not affect the continuing rights and obligations of Project Co, the Board and the Independent Tester under Clauses 6 (*Limitations on Authority*), 8 (*Confidential Information and Copyright*), 9 (*Professional Indemnity*

Insurance), 18 (*Dispute Resolution Procedure*) and this Clause or under any other Clause which is expressed to survive termination or which is required to give effect to such termination or the consequences of such termination.

8 CONFIDENTIAL INFORMATION AND COPYRIGHT

8.1 The Independent Tester shall treat as secret and confidential and shall not at any time for any reason disclose or permit to be disclosed to any person or otherwise make use of or permit to be made use of any unpublished information relating to Project Co's or the Board's or the Contractor's (if appropriate) technology or other know-how business plans or finances or any such information relating to a subsidiary, supplier, customer or client of Project Co or the Board or the Contractor (if appropriate) where the information was received during the period of this Agreement except as may be reasonably necessary in the performance of the Services. Upon termination of this Agreement for whatever reasons the Independent Tester shall offer to deliver up to Project Co or the Board (as appropriate) all working papers, computer disks and tapes or other material and copies provided to or prepared by him pursuant either to this Agreement or to any previous obligation owed to Project Co or the Board provided always that the Independent Tester shall be entitled to retain copies of all such items where such offer is accepted.

8.2 The obligation to maintain confidentiality does not apply to any information or material to the extent that the Independent Tester is compelled to disclose any such information or material by law or any regulatory or Government authority.

8.3 The copyright in all reports, and other documents produced by the Independent Tester in connection with the Project shall remain vested in the Independent Tester but the Independent Tester grants to Project Co and Board and their nominees with full title guarantee a non-exclusive irrevocable royalty free licence to copy and use such reports, and other documents and to reproduce the information contained in them for any purpose related to the Project including (but without limitation) the construction, completion, maintenance, letting, promotion, advertisement, reinstatement, extension and repair of the Project. Such licence shall include a licence to grant sub-licences and to transfer the same to third parties.

8.4 The Independent Tester shall not be liable for use by any person of the documents, (including reports, details, plans, specifications, schedules, computer programs, software, consents and any other papers, works, reports and inventions produced by the Independent Tester) for any purpose other than that for which the same were prepared by or on behalf of the Independent Tester.

9 PROFESSIONAL INDEMNITY INSURANCE

9.1 Without prejudice to its obligations under this Agreement, or otherwise at law, the Independent Tester shall maintain professional indemnity insurance with a limit of indemnity of not less than ten million pounds (£10,000,000) for any one claim in respect of any neglect, error or omission on the Independent Tester's part in the performance of its obligations under this Agreement for the period commencing on the date of this Agreement and expiring twelve (12) years after:

9.1.1 the date of final certification of the Works; or

9.1.2 the termination of this Agreement,

whichever is the earlier, provided that such insurance is available in the market place at commercially reasonable rates.

9.2 The Independent Tester shall maintain such insurance with reputable insurers carrying on business in the United Kingdom.

9.3 Any increased or additional premium required by insurers by reason of the Independent Tester's own claims record or other acts, omissions, matters or things particular to the Independent Tester shall be deemed to be within commercially reasonable rates.

9.4 The Independent Tester shall as soon as reasonably practicable inform Project Co and the Board if such insurance ceases to be available at commercially reasonable rates in order that the Independent Tester and Project Co and the Board can discuss means of best protecting the respective positions of Project Co and the Board and the Independent Tester in respect of the Project in the absence of such insurance.

9.5 The Independent Tester shall fully co-operate with any measures reasonably required by Project Co and the Board including (without limitation) completing any proposals for insurance and associated documents, maintaining such insurance at rates above commercially reasonable rates if Project Co and the Board undertake in writing to reimburse the Independent Tester in respect of the net cost of such insurance to the Independent Tester above commercially reasonable rates.

9.6 The Independent Tester shall, prior to commencing the provision of the Services and as soon as reasonably practicable following renewal dates, produce for inspection by Project Co and the Board documentary evidence that such insurance is being properly maintained.

9.7 The above obligations in respect of professional indemnity insurance shall continue notwithstanding termination of this Agreement for any reason whatsoever, including (without limitation) breach by Project Co and the Board.

10 LIMITATION OF LIABILITY

10.1 With the exception of liability for death, personal injury and/or any other liability that cannot lawfully be excluded or limited, the Independent Tester's maximum aggregate liability to all parties, under or in connection with this Agreement, whether in contract or in delict, or for breach of statutory duty is limited to ten million (£10,000,000).

10.2 [Not Used]

10.3 No action or proceedings under or in connection with this Agreement shall be commenced against the Independent Tester after the expiry of twelve years from the earlier of: (a) the completion of the Services; and (b) the termination of this Agreement.

11 SUB-CONTRACTOR LOSSES AND NO LOSS AVOIDANCE

11.1 Without prejudice to Clause 10 (*Limitation of Liability*) the Independent Tester hereby acknowledges and accepts (a) that a breach or failure on the part of the Independent Tester could have adverse financial consequences for the Sub-Contractors (or any of them) and (b) any losses, damages, costs and/or other liabilities suffered or incurred by the Sub-Contractors (or any of them) (as the case may be) arising from or in connection with any breach or failure on the part of the Independent Tester under this Agreement shall, for the purposes of this Agreement and notwithstanding the provisions of any Sub-Contract, be deemed to be losses, damages, costs and/or liabilities suffered or incurred by Project Co arising from or in connection with such breach or failure.

11.2 Where the Independent Tester would otherwise be liable to make a payment by way of compensation to Project Co including amounts which, in turn, comprise compensation to any Sub-Contractor which is payable by Project Co and/or which would be payable by way of compensation to any Sub-Contractor by Project Co the Independent Tester shall not be entitled to withhold, reduce or avoid any such payment to Project Co in reliance (in whole or in part) on the fact that payment of the amount which is or would be due from Project Co to the Sub-Contractor or the entitlement of the Sub-Contractor to receive payment of such amount (as a result of the circumstances giving rise to the Independent Tester's obligation to pay such compensation) is conditional on receipt by Project Co of such amount from the Independent Tester.

12 NOTICES

All notices or other communications required in connection with this Agreement shall be in writing and sent by hand, by first class pre-paid post or by facsimile transmission to the relevant address or facsimile number set out in the Project Agreement or in the case of the Independent Tester to its registered office for the attention of the company secretary or to such other address or facsimile number as a party to this Agreement may notify to another party to this Agreement in writing.

13 ASSIGNATION

13.1 The Independent Tester shall not assign or transfer any of its rights or obligations under this Agreement or sub-contract the whole or any part of the Services.

13.2 Neither Project Co nor the Board shall be entitled to assign or transfer any of their respective rights or obligations under this Agreement save that the parties hereby consent to any such assignation or transfer which is contemporaneous to the assignation or transfer of the Project Agreement and is made to the same assignee or transferee. In the event that the Project Agreement is novated to a third party, the term "Project Agreement" shall include any replacement contract arising from such novation.

13.3 The Independent Tester shall not be entitled to contend that any person to whom this Agreement is assigned in accordance with Clause 13.2 is precluded from recovering under this Agreement any loss incurred by such assignee resulting from any breach of this Agreement (whenever happening) by reason that such person is an assignee and not a named party under this Agreement.

14 CUMULATIVE RIGHTS AND ENFORCEMENT

14.1 Any rights and remedies provided for in this Agreement whether in favour of Project Co or the Board or the Independent Tester are cumulative and in addition to any further rights or remedies which may otherwise be available to the parties.

14.2 The duties and obligations of the Independent Tester arising under or in connection with this Agreement are owed to Project Co and the Board both jointly and severally and Project Co and the Board may accordingly enforce the provisions hereof and pursue their respective rights hereunder in their own name, whether separately or with each other.

14.3 Project Co and the Board covenant with each other that they shall not waive any rights, remedies or entitlements or take any other action under this Agreement which would or might reasonably be expected to adversely affect the rights, remedies or entitlements of the other without the other's prior written consent, such consent not to be unreasonably withheld or delayed.

15 WAIVER

The failure of any party at any one time to enforce any provision of this Agreement shall in no way affect its right thereafter to require complete performance by any other party, nor shall the waiver of any breach or any provision be taken or held to be a waiver of any subsequent breach of any provision or be a waiver of the provision itself.

16 SEVERABILITY

In the event that any term, condition or provision contained in this Agreement shall be held to be invalid, unlawful or unenforceable to any extent, such term, clause or provision shall, to that extent, be omitted from this Agreement and the rest of this Agreement shall stand, without affecting the remaining clauses.

17 VARIATION

A variation of this Agreement is valid only if it is in writing and signed by or on behalf of each party.

18 DISPUTE RESOLUTION PROCEDURE

18.1 All disputes shall be resolved in accordance with terms equivalent (mutatis mutandis) to the Dispute Resolution Procedure as set out in the Project Agreement.

18.2 Project Co, the Board and the Independent Tester shall co-operate to facilitate the proper, just, economical and expeditious resolution of any and all such disputes which arise under this Agreement.

19 GOVERNING LAW AND JURISDICTION

Subject to Clause 18 (*Dispute Resolution Procedure*) above, this Agreement shall be governed by and construed in accordance with the laws of Scotland, and (subject as aforesaid) the parties hereby submit to the non-exclusive jurisdiction of the courts of Scotland.

20 THIRD PARTY RIGHTS

Save as expressly set out herein, no provision of this Agreement is intended to or does confer upon any third party any benefit or right enforceable at the option of that third party against any party to this Agreement.

IN WITNESS WHEREOF these presents consisting of this and the eleven preceding pages and the Appendices are executed as follows:-

(a)
(b)

SIGNED for and on behalf of
LOTHIAN HEALTH BOARD

at

on the day
of 2015

by

.....
Authorised Signatory

..... Full Name

Before this witness

..... Witness

..... Full Name
..... Address

.....

SIGNED for and on behalf of the said **IHS LOTHIAN LIMITED** acting under a power of attorney

at

on

by

_____ _____

Print Full Name Attorney

Before this witness

_____ _____

Print Full Name Witness

Address

_____

SUBSCRIBED for and on behalf
of the said **EC HARRIS LLP**

at

on

by

_____ _____

Print Full Name Member

_____ _____

Print Full Name Member

Address

_____

_____

_____

Signed by
PRUDENTIAL TRUSTEE COMPANY LIMITED

at

on

Acting by its duly
Authorised Sealing Officer

.....
Sealing Officer

Before this witness

.....

.....
Witness

Address

.....

.....

Signed by
M&G INVESTMENT MANAGEMENT LIMITED

at

on

Acting by its duly
Authorised attorney

.....

.....
(Attorney)

Before this witness

.....

.....
(Witness)

Address

.....

.....

SUBSCRIBED for and on behalf of **BROOKFIELD MULTIPLEX CONSTRUCTION EUROPE LIMITED**

at

On the day of 2015 as follows:-

..... (Director/Authorised Signatory)

..... Full Name

Before this witness: -

Witness .....

Full name .....

Address .....

.....

.....

SUBSCRIBED for and on behalf of the said **BROOKFIELD MULTIPLEX CONSTRUCTION EUROPE LIMITED**

at

on

by

_____ _____

Print Full Name Director

before this witness

_____ _____

Print Full Name

Address

_____

_____

_____

APPENDIX 1

SCOPE OF SERVICES - INDEPENDENT TESTER CONTRACT

The Independent Tester shall perform the role of Independent Tester as referred to in Clauses 17 (*Pre-Completion Commissioning and Completion*), 18 (*Post Completion Commissioning*) and 19 (*Fossils and Antiquities*) (including complying with any time limits specified in such Clauses) and Schedule Part 6 *(Construction Matters)*, Schedule Part 7 (*The Programme*), Schedule Part 8 *(Review Procedure)*, Schedule Part 10 (*Outline Commissioning Programme*) and Schedule Part 11 (*Equipment*) of the Project Agreement, by providing the following scope of Services:

1 MONTHLY REPORT AND COMPLETION CERTIFICATION

The Independent Tester shall:

1.1 During the Works, attend monthly site progress meetings and provide the Board and Project Co with a monthly report on the activities carried out by the Independent Tester.

1.2 Undertake regular inspections during the Works, as necessary, in accordance with the Project Agreement. Report on the completion status of the Project, identifying any work that is not compliant with the Board's Construction Requirements, Project Co's Proposals, the Approved Reviewable Design Data (Approved RDD) and/or the Completion Criteria.

1.3 Provide details of any tests carried out by Project Co together with results obtained during that period.

1.4 Certify the Actual Completion Date and issue a Certificate of Practical Completion in accordance with the Project Agreement.

1.5 Within five (5) Business Days of issue of the Certificate of Practical Completion, issue a Snagging Notice specifying any Snagging Matters. Monitor and review rectification of such Snagging Matters in accordance with the Project Agreement.

1.6 Review the programme for the rectification of all Snagging Matters to be carried out and advise Project Co and the Board as appropriate.

1.7 And in order to enable the Independent Tester to discharge these primary functions which are to be performed independently, fairly and impartially to and as between Project Co and the Board and having regard to the interests of Funders, the Secured Creditors, the Security Trustee and the Intercreditor Agent, the Independent Tester shall discharge the further duties described below.

1.8 Monitor the Works against the required standards of construction quality and Reviewable Design Data.

1.9 Monitor the Works for compliance with the Board Construction Requirements and Project Co's Proposals and compliance with Law.

1.10 Provide details of Project Co's compliance with the Quality Plans.

2 GENERAL

The Independent Tester shall:

2.1 Familiarise itself with the Project Agreement (including the Design Data, the Design Quality Plan, the Construction Quality Plan, Schedule Part 11 (*Equipment*) of the Project Agreement and any Changes issued from time to time and any other relevant documentation or information referred to in the Project Agreement, relevant Service Level Specification and Method Statements) and the Construction Contract to the extent necessary to enable it to provide a report to the Board and Project Co on any contradictory requirements contained within the same and to be in a position to carry out the Services in accordance with the terms of the Project Agreement and this Agreement. Prior to the Commencement Date the Independent Tester shall prepare and issue to the Board and Project Co a project execution plan ("**PEP**") to include a detailed execution methodology for undertaking the Services including the following; (i) proposed team and duties for each team member; (ii) proposed programme for site visits detailing key inspections; (iii) monthly report template including standard format and items to be covered; and (iv) detailed project specific procedures for undertaking the Services.

2.2 Following notification by Project Co, pursuant to Clauses 17.8 *(Commissioning prior to Completion Date)* and 17.10 *(Pre-Completion inspection)* of the Project Agreement, inspect and comment as required on the Works as required by the Completion Process.

2.3 Undertake monthly inspections in accordance with the Programme and Final Commissioning Programme.

2.4 Identify any delays in the Programme and/or Final Commissioning Programme, any non-compliance by Project Co and any other quality control matters.

3 DESIGN REVIEW

The Independent Tester shall:

3.1 Monitor and report upon the implementation of the Design Quality Plan for the construction, structural and engineering services design for the Project.

3.2 Monitor the detailed working drawings and specifications for a sample number and type of rooms which in his professional judgment is appropriate to be selected by the Independent Tester to verify that they comply with the Approved RDD as described in the Project Agreement. The Independent Tester has indicated that in normal circumstances twenty-five percent (25%) of rooms should be sampled. If in the professional judgment of the Independent Tester, because of the results of its sample or other circumstances a different sampling percentage is appropriate, he shall provide a detailed report in respect of that and, if so agreed (or determined as between Project Co and the Board by the Dispute Resolution Procedure) any change in the percentage sampling resulting in a change in fees will be borne by Project Co and the Board as they shall agree or as determined by the Dispute Resolution Procedure.

3.3 Review the detailed design information for any approved design or specification variations for compliance with the performance and quality standards of the Project Agreement, and quality standards as set out in the and the Contractor's Quality Plan.

4 PROCEDURE REVIEW

The Independent Tester shall:

4.1 Monitor the operation of the quality assurance procedures of the Contractor at monthly intervals during the execution of the Works.

4.2 The Independent Tester shall familiarise itself with the proposed procedures and programmes for the testing and commissioning of the Mechanical and Electrical engineering services prior to the Board's occupation.

4.3 Monitor the procedures for the identification, approval and recording of agreed Changes to the Works in accordance with the Project Agreement.

4.4 Review any samples or mock ups as required by Section 5 *(Reviewable Design Data)* of Schedule Part 6 *(Construction Matters)* and Schedule Part 8 *(Review Procedure)* and check that they have been approved in accordance with the Project Agreement.

5 CONSTRUCTION REVIEW

The Independent Tester shall:

5.1 Visit the Site and Off-Site and monitor the Works for their compliance with the Project Agreement, the Completion Criteria, the Board's Construction Requirements, Project Co's Proposals and the Approved RDD. The frequency and timing of the Independent Tester's visits are dependent on the progress of construction on Site and Off-Site. The Contractor shall agree a programme with the Independent Tester for the inspection of key construction processes and the completed Works and shall give the Independent Tester advance notice of these Works being carried out on Site and Off-Site. The Independent Tester shall identify any aspect of the Works which needs to be inspected before being covered over by subsequent activity so that he may satisfy himself that these have been constructed in accordance with the Contractor's Quality Plan without the need for opening up.

5.2 Randomly check that the Works are being undertaken in accordance with the Construction Quality Plan that has been agreed by the Board and Project Co.

5.3 Review the written Mechanical and Electrical engineering services testing and commissioning procedure. Undertake selective witnessing of the Mechanical and Electrical services testing and commissioning. The Independent Tester has indicated that these sampling proportions should amount to approximately fifty percent (50%). The Independent Tester shall review one hundred percent (100%) of all test results. If in the professional judgment of the Independent Tester, because of the results of witnessing (or because of other circumstances) a different sampling percentage is appropriate he shall provide a detailed report in respect of that and any change in the percentage sampling resulting in a change of fees will be borne by Project Co, the Board or the Contractor as they shall agree, failing such agreement, as determined by the Dispute Resolution Procedure.

5.4 Inspect rectification works which have previously prevented the Independent Tester from certifying the Project as complete. Concurrent with the issue of the Certificate of Practical Completion, agree a list of Snagging Matters with the Board and Project Co together with its programme for implementation and issue a Snagging Notice in accordance with Clause 17.14 *(Completion Certificate)* of the Project Agreement.

5.5 Check the production of the relevant operating manuals, relevant approvals, test results, inspection records and as built drawings and monitor the timely handover of this documentation.

6 PARTICIPATION IN DISPUTE RESOLUTION

As and when required by the Board or Project Co, the Independent Tester shall participate in the Dispute Resolution Procedure of the Project Agreement (as such term is defined in the Project Agreement) to the extent that issues under the Project Agreement which have been referred to the said Dispute Resolution Procedure relate to the Independent Tester's other obligations and tasks as set out in this Appendix 1 and this Agreement.

APPENDIX 2

SECTION 1

SCHEDULE OF DRAWDOWN OF FEES

FEE BREAKDOWN
(excluding VAT)

	Drawdown Fee per month
Month 1	£5,850
Month 2	£11,310
Month 3	£11,860
Month 4	£7,020
Month 5	£5,920
Month 6	£7,570
Month 7	£6,370
Month 8	£5,270
Month 9	£10,210
Month 10	£3,320
Month 11	£3,030
Month 12	£3,030
Month 13	£3,110
Month 14	£3,110
Month 15	£3,110
Month 16	£3,110
Month 17	£3,110
Month 18	£3,110
Month 19	£3,110
Month 20	£3,110
Month 21	£3,150
Month 22	£3,150
Month 23	£3,150
Month 24	£9,660
Month 25	£9,660
Month 26	£9,660
Month 27	£11,930
Month 28	£11,930
Month 29	£13,240
Month 30	£3,990
Month 31	£2,680
Month 32	£2,680
Month 33	———
Month 34	———
Month 35	———
Month 36	———
	Total £190,520

SECTION 2

SCHEDULE OF DAILY RATES

Daily Rates for Provisions of Additional Services

Grade	**Daily Rate (£)**
Partner	£1,240.00
Lead Independent Tester	£1,064.00
Independent Tester	£712.00
Service Expert (Structural Engineer, ICT, Medical Equipment)	£768.00
Technical Support	£352.00

SCHEDULE PART 14

CONTRACT SUM AND PAYMENT SCHEDULE

Part 1

Progress Milestone Schedule and Maximum Payment Schedule

Progress Milestone Schedule						Maximum Payment Schedule	
Relevant Period			C - commenced SC - substantially complete		(£ stg)	(£ stg)	(£ stg)
From	To (last Business Day of the month)	Progress Milestone number	Progress Milestone			Monthly	Cumulative
12/02/2015	12/02/2015	IP1	Initial Payment at Financial Close		8,883,000	8,883,000	8,883,000
12/02/2015	12/02/2015	IP2	Intiial Payment at Financial Close - Design Fees		360,000	360,000	9,243,000
16/02/2015	27/02/2015	A1	Enabling works	15%	1,112,000		
			Demolition	50%	50,000		
			Substructure	C	2,350,000	3,512,000	12,755,000
01/03/2015	31/03/2015	A2	Enabling works	40%	1,600,000		
			Demolition	SC	50,000		
			Substructure	10%	2,149,000	3,799,000	16,554,000
01/04/2015	30/04/2015	A3	Enabling works	63%	1,200,000		
			Substructure	20%	1,350,000		
			Structure	C	1,384,000	3,934,000	20,488,000
01/05/2015	29/05/2015	A4	Enabling works	87%	885,116		
			Substructure	35%	700,000		
			Structure	11%	1,692,884	3,278,000	23,766,000
01/06/2015	30/06/2015	A5	Enabling works	SC	50,000		
			Substructure	45%	1,000,000		
			Ground slab & underground drainage	C	300,000		
			Structure	18%	2,177,000	3,527,000	27,293,000
01/07/2015	31/07/2015	A6	Substructure	55%	800,000		
			Ground slab & underground drainage	10%	300,000		

Progress Milestone Schedule						Maximum Payment Schedule	
Relevant Period			C - commenced SC - substantially complete		(£ stg)	(£ stg)	(£ stg)
From	To (last Business Day of the month)	Progress Milestone number	Progress Milestone			Monthly	Cumulative
			Structure	25%	2,244,000	3,344,000	30,637,000
01/08/2015	31/08/2015	A7	Substructure	65%	350,000		
			Ground slab & underground drainage	20%	225,000		
			Structure	32%	2,711,000	3,286,000	33,923,000
01/09/2015	30/09/2015	A8	Substructure	75%	400,000		
			Ground slab & underground drainage	30%	477,000		
			Structure	39%	2,100,000		
			Structural Steel	C	200,000	3,177,000	37,100,000
01/10/2015	30/10/2015	A9	Substructure	85%	500,000		
			Ground slab & underground drainage	40%	240,834		
			Structure	46%	3,045,166		
			Envelope	C	300,000		
			Structural Steel	10%	100,000	4,186,000	41,286,000
01/11/2015	30/11/2015	A10	Substructure	95%	500,000		
			Ground slab & underground drainage	50%	376,764		
			Structure	53%	2,050,000		
			Structural Steel	15%	100,000		
			Envelope	10%	1,658,236		
			Fitout Zone A	C	200,000	4,885,000	46,171,000
01/12/2015	24/12/2015	A11	Substructure	SC	100,000		
			Ground slab & underground drainage	60%	396,000		
			Structure	60%	2,050,000		
			Structural Steel	25%	250,000		
			Envelope	20%	100,000		
			Fitout Zone A	8%	2,300,0		

Progress Milestone Schedule						Maximum Payment Schedule	
Relevant Period			C - commenced SC - substantially complete		(£ stg)	(£ stg)	(£ stg)
From	To (last Business Day of the month)	Progress Milestone number	Progress Milestone			Monthly	Cumulative
					00		
			EC Structure	C	500,000	5,696,000	51,867,000
01/01/2016	29/01/2016	A12	Ground slab & underground drainage	70%	136,406		
			Structure	67%	1,300,000		
			Structural Steel	25%	100,000		
			Envelope	30%	800,000		
			Fitout Zone A	15%	3,644,594		
			Lifts	C	250,000		
			EC Structure	19%	200,000	6,431,000	58,298,000
01/02/2016	29/02/2016	A13	Ground slab & underground drainage	80%	100,000		
			Structure	74%	1,000,000		
			Structural Steel	30%	50,000		
			Envelope	40%	1,250,000		
			Fitout Zone A	21%	4,294,500		
			Fitout Zone C	C	500,000		
			Lifts	10%	500,000		
			Plantroom Zone A	C	200,000		
			External Services	C	100,000		
			EC Structure	36%	600,500	8,595,000	66,893,000
01/03/2016	31/03/2016	A14	Ground slab & underground drainage	90%	100,000		
			Structure	81%	1,850,434		
			Structural Steel	60%	50,000		
			Envelope	50%	1,000,000		
			Fitout Zone A	28%	3,446,566		
			Fitout Zone B	C	200,000		
			Fitout Zone C	10%	600,000		

Progress Milestone Schedule						Maximum Payment Schedule	
Relevant Period			C - commenced SC - substantially complete		(£ stg)	(£ stg)	(£ stg)
From	To (last Business Day of the month)	Progress Milestone number	Progress Milestone			Monthly	Cumulative
					0		
			Lifts	20%	100,000		
			Plantroom Zone A	18%	200,000		
			External Services	15%	100,000		
			EC Structure	55%	500,000	8,147,000	75,040,000
01/04/2016	29/04/2016	A15	Ground slab & underground drainage	SC	40,000		
			Structure	88%	1,850,500		
			Structural Steel	90%	40,000		
			Envelope	60%	1,000,000		
			Fitout Zone A	35%	3,126,500		
			Fitout Zone B	10%	500,000		
			Fitout Zone C	17%	600,000		
			Lifts	25%	100,000		
			Plantroom Zone A	30%	200,000		
			External Services	30%	100,000		
			EC Structure	72%	500,000	8,057,000	83,097,000
01/05/2016	31/05/2016	A16	Structure	SC	250,000		
			Structural Steel	SC	10,000		
			Envelope	70%	1,000,000		
			Fitout Zone A	43%	3,400,000		
			Fitout Zone B	17%	750,000		
			Fitout Zone C	24%	900,000		
			Lifts	35%	100,000		
			Plantroom Zone A	43%	200,000		
			Plantroom Zone B&C	C	188,500		
			External Services	43%	100,000		

Progress Milestone Schedule						Maximum Payment Schedule	
Relevant Period			C - commenced SC - substantially complete		(£ stg)	(£ stg)	(£ stg)
From	To (last Business Day of the month)	Progress Milestone number	Progress Milestone			Monthly	Cumulative
					0		
			EC Structure	90%	400,000		
			EC Fitout & M&E	C	400,500	7,699,000	90,796,000
01/06/2016	30/06/2016	A17	Envelope	85%	1,750,464		
			Fitout Zone A	52%	1,850,000		
			Fitout Zone B	24%	1,000,000		
			Fitout Zone C	31%	1,270,536		
			Lifts	45%	200,000		
			Plantroom Zone A	56%	200,000		
			Plantroom Zone B&C	15%	200,000		
			External works outwith Site boundary	C	50,000		
			External Services	56%	200,000		
			EC Structure	SC	100,000		
			EC Fitout & M&E	25%	250,000	7,071,000	97,867,000
01/07/2016	29/07/2016	A18	Envelope	95%	1,600,000		
			Fitout Zone A	59%	1,350,000		
			Fitout Zone B	31%	1,350,000		
			Fitout Zone C	38%	1,302,000		
			Lifts	55%	200,000		
			Plantroom Zone A	68%	100,000		
			Plantroom Zone B&C	30%	200,000		
			External works outwith Site boundary	25%	250,000		
			External Services	67%	100,000		
			Hard & Soft Landscaping	C	100,000		
			EC Fitout & M&E	41%	250,000	6,802,000	104,669,000

Progress Milestone Schedule						Maximum Payment Schedule	
Relevant Period			C - commenced SC - substantially complete		(£ stg)	(£ stg)	(£ stg)
From	To (last Business Day of the month)	Progress Milestone number	Progress Milestone			Monthly	Cumulative
01/08/2016	31/08/2016	A19	Envelope	SC	150,000		
			Fitout Zone A	66%	1,680,000		
			Fitout Zone B	38%	1,644,434		
			Fitout Zone C	45%	1,621,566		
			Lifts	65%	200,000		
			Plantroom Zone A	81%	100,000		
			Plantroom Zone B&C	45%	200,000		
			External works outwith Site boundary	50%	250,000		
			External Services	81%	100,000		
			Hard & Soft Landscaping	10%	500,000		
			EC Fitout & M&E	60%	250,000	6,696,000	111,365,000
01/09/2016	30/09/2016	A20	Fitout Zone A	73%	1,730,000		
			Fitout Zone B	45%	1,730,000		
			Fitout Zone C	52%	1,721,566		
			Lifts	75%	200,000		
			Plantroom Zone A	95%	75,000		
			Plantroom Zone B&C	60%	200,000		
			External works outwith Site boundary	70%	250,000		
			External Services	94%	10,000		
			Hard & Soft Landscaping	20%	455,434		
			EC Fitout & M&E	75%	250,000	6,622,000	117,987,000
01/10/2016	31/10/2016	A21	Fitout Zone A	80%	1,646,522		
			Fitout Zone B	52%	1,600,000		
			Fitout Zone C	59%	1,600,000		
			Lifts	80%	100,000		

Progress Milestone Schedule						Maximum Payment Schedule	
Relevant Period			C - commenced SC - substantially complete		(£ stg)	(£ stg)	(£ stg)
From	To (last Business Day of the month)	Progress Milestone number	Progress Milestone			Monthly	Cumulative
			Plantroom Zone A	SC	25,000		
			Plantroom Zone B&C	71%	300,000		
			External works outwith Site boundary	90%	0		
			External Services	SC	75,000		
			Hard & Soft Landscaping	30%	8,478		
			EC Fitout & M&E	90%	500,000	5,905,000	123,892,000
01/11/2016	30/11/2016	A22	Fitout Zone A	87%	50,000		
			Fitout Zone B	59%	1,299,740		
			Fitout Zone C	66%	1,400,000		
			Lifts	85%	1,333,260		
			Plantroom Zone B&C	84%	100,000		
			External works outwith Site boundary	SC	300,000		
			Hard & Soft Landscaping	40%	25,000		
			EC Fitout & M&E	SC	500,000	5,008,000	128,900,000
01/12/2016	23/12/2016	A23	Fitout Zone A	93%	50,000		
			Fitout Zone B	64%	1,209,000		
			Fitout Zone C	73%	1,300,000		
			Lifts	90%	1,300,000		
			Plantroom Zone B&C	94%	100,000		
			Hard & Soft Landscaping	50%	200,000		
01/01/2017	31/01/2017	A24	Fitout Zone A	97%	500,000	4,609,000	133,509,000
			Fitout Zone B	70%	1,059,000		
			Fitout Zone C	77%	1,300,000		
			Lifts	95%	1,300,000		
			Plantroom Zone B&C	SC	100,000		
					100,000		

Progress Milestone Schedule						Maximum Payment Schedule	
Relevant Period			C - commenced SC - substantially complete		(£ stg)	(£ stg)	(£ stg)
From	To (last Business Day of the month)	Progress Milestone number	Progress Milestone			Monthly	Cumulative
			Hard & Soft Landscaping	58%	500,000	4,359,000	137,868,000
01/02/2017	28/02/2017	A25	Fitout Zone A	SC	150,000		
			Fitout Zone B	76%	1,708,000		
			Fitout Zone C	83%	1,700,000		
			Lifts	SC	100,000		
			Hard & Soft Landscaping	67%	500,000	4,158,000	142,026,000
01/03/2017	31/03/2017	A26	Fitout Zone B	83%	1,706,024		
			Fitout Zone C	90%	1,674,976		
			Hard & Soft Landscaping	77%	200,000	3,581,000	145,607,000
01/04/2017	28/04/2017	A27	Fitout Zone B	89%	1,000,000		
			Fitout Zone C	96%	1,009,000		
			Hard & Soft Landscaping	85%	75,000	2,084,000	147,691,000
01/05/2017	31/05/2017	A28	Fitout Zone B	97%	300,000		
			Fitout Zone C	SC	250,000		
			Hard & Soft Landscaping	95%	274,000		
			Demobilisation	50%	250,000	1,074,000	148,765,000
01/06/2017	30/06/2017	A29	Fitout Zone B	SC	200,000		
			Hard & Soft Landscaping	SC	200,000		
			Demobilisation	SC	209,000	609,000	149,374,000
01/07/2017	31/07/2017	A30	Achieve Completion	100%	1,000,000	1,000,000	150,374,000
					150,374,000	150,374,000	150,374,000

Part 2 – Priced Equipment List

1. The following Priced Equipment table is included in this Schedule Part 14 (*Contract Sum and Payment Schedule*) as Section 2 for reference only - the Contractor is obliged to include with each interim payment application a note of the equipment from this list that is included within the progress milestone schedule payment request (for purpose of clarifying title passing on payment.

Code	Quantity	Description	Group	Rate	Total
ALA001	191	PUSH BUTTON, security alarm	1	£51.55	£9,846.05
ALA020	4	LAMP INDICATING fire alarm initiation, wall mounted	1	£100.00	£400.00
AMA900	4	AMALGAMATOR; dental.	3	Nil	Nil
AMP2500	4	AMPLIFIER SYSTEM	1	£15,000.00	£60,000.00
ANA001	18	ANAESTHETIC MACHINE/WORKSTATION electrically powered piston ventilator, mobile, 1350H 750W 650D	3	Nil	Nil
ANA004	14	ANAESTHETIC MACHINE/WORKSTATION with ventilator, with accessories, mobile, 1580H 565W 695D	3	Nil	Nil
ANA007	6	ANAESTHETIC MACHINE/WORKSTATION; MRI compatible; electrically powered piston ventilator; mobile; 1350H 750W 650D	3	Nil	Nil
ANA050	3	ANALYSER; blood gas with electrolytes; 510H 560W 485D	3	Nil	Nil
ANA1001	1	ANALYSER; Haematocrit	3	Nil	Nil
ANA2500	1	Integral/mobile Quantiflex Inhalation Sedation Machine	3	Nil	Nil
ANA2502	1	ANALYSER; Gas Chromatography / Mass Spectrometry.	3	Nil	Nil
ANA2503	1	ANALYSER; Biochrom amino acid	3	Nil	Nil
ANA901	1	ANALYSER; LIQUID CHROMOTOGRAPHY; High Pressure	3	Nil	Nil
APX900	1	Apex Locator	3	Nil	Nil
AUD003	3	METER; sound level; 265H 75W 60D	3	Nil	Nil
AUD005	6	AUDIOMETER; clinical; diagnostic; 195H 475W 450D	3	Nil	Nil
AUD2502	1	Audio Recording Machine	3	Nil	Nil
AUD8000	1	EVOKED POTENTIAL instrument; complete unit with Videotoscopy; 380H 365W 255D	3	Nil	Nil
AUD8001	4	TYMPANOMETER; High Frequency; 380H 365W 255D	3	Nil	Nil
AUD8002	1	Automated Auditory Brainstem Responses (AABR)	3	Nil	Nil
AUR2500	7	AURICLE; with videotoscopy	3	Nil	Nil
AUR2501	1	AURICLE	3	Nil	Nil
AUT900	1	Autoclave	1	£4,500.00	£4,500.00
BAC002	4	BACKREST, WC/toilet, padded, wall mounted	1	£64.93	£259.72
BAG2500	1	Bean Bag; with washable covers	3	Nil	Nil
BAL900	1	BALANCE	3	Nil	Nil
BAS015	15	BASIN; small; stainless steel; apron front; 1 tap hole; 500W 400D	1	£108.56	£1,628.40
BAS1002	3	BASIN; medium; inset; vitreous china; 1 no right hand tap hole; no overflow.	1	£149.90	£449.70

Code	Quantity	Description	Group	Rate	Total
BAS101	633	BASIN, medium, hospital pattern, vitreous china, no tap holes, no overflow, intefral back outlet, 500W 400D	1	£149.90	£94,886.70
BAS102	1	BASIN; medium; inset; vitreous china; 1 no right hand tap hole; no overflow.	1	£149.90	£149.90
BAS105	166	BASIN; small; general pattern; vitreous china; 1 tap hole centred on basin; no overflow; bottom outlet; 400W 300D; HTM64LBGS	1	£149.90	£24,883.40
BAS106	241	BASIN; medium; general pattern; vitreous china; 1 tap right hand hole; no overflow; bottom outlet; 500W 400D. HTM64LBGM	1	£149.90	£36,125.90
BAT015	9	BATH; variable height; with control panel and all services.	1	£8,000.00	£72,000.00
BAT1000	25	BATH; domestic style; 2 no tap holes; 480-500h; 1700w; 700d.	1	£828.81	£20,720.25
BAT900	1	Automated bath seat	3	Nil	Nil
BAT901	1	Bath Board	3	Nil	Nil
BAT902	2	Bath seat (Medici)	3	Nil	Nil
BAT903	1	Bath step	3	Nil	Nil
BAT904	1	Perching stool	3	Nil	Nil
BAT905	1	Swivel bather	3	Nil	Nil
BAT907	1	BATH splint 540W 340D	3	Nil	Nil
BED003	11	BED; cot; baby; dropside; standard size	3	Nil	Nil
BED004	22	BED, divan style, fixed height, with legs, on lockable castors, 1950L 900W	3	Nil	Nil
BED008	4	BED; Kings Fund; child; variable height; two-way tilt; adjustable backrest; on castors	3	Nil	Nil
BED013	197	BED Kings Fund; variable height; two-way tilt; adjustable backrest; bedstripper; on castors	3	Nil	Nil
BED016	14	BED, CCU/ITU, radio translucent rising backrest, two-way tilt, height adjustable (685-860), on castors	3	Nil	Nil
BED020	47	BED; fold down; 760 mm width mattress; vertical.	1	£2,000.00	£94,000.00
BED030	10	BED headboard single	2A	£3.96	£39.60
BED1000	12	BEDSIDE UNIT; 1 drawer, 1 cupboard with 1 shelf; 540H 450W 450D	3	Nil	Nil
BED2500	2	Moses basket	3	Nil	Nil
BED2501	20	Mobile bed divider 1600W 1350H	3	Nil	Nil
BED2502	270	BED HEAD BUFFER; bed and wall protection; vertical; wall mounted.	1	£72.10	£19,467.00
BED2506	5	BED; variable height; electric; with cot sides	3	Nil	Nil
BED2507	2	BED lever	3	Nil	Nil
BED2508	64	BED; ward; fold down; 760 mm width mattress; vertical with services.	1	£1,965.10	£125,766.40
BED2509	45	BED HEAD BUFFER; bed and wall protection; horizontal; wall mounted.	1	£40.00	£1,800.00
BED2510	3	BED; ward; fold down; 760 mm width mattress.	1	£1,965.10	£5,895.30
BED2511	3	BED; ward; fold down; 760 mm width mattress.	1	£1,965.10	£5,895.30
BED900	52	BED: Divan style bed with pull out bed under	3	Nil	Nil
BED904	2	BED; divan style; fixed height; with legs; 1950L 900W	2A	£23.71	£47.42
BEN002	23	PLAY-BENCH UNIT; with 3 storage	3	Nil	Nil

Code	Quantity	Description	Group	Rate	Total
		boxes; 360H 1035W 470D			
BEN901	4	BENCH; changing; 450H 2000W 400D	3	Nil	Nil
BEN999	1	BENCH; play with shelves; to interior design development	3	Nil	Nil
BIN023	2	BIN; flammable waste; hinged lid. Complies with HTM83/1983 and BS476PT 7 (1971) for class '0' fire retardancy	3	Nil	Nil
BIN025	7	BIN, disposal, standard, pedal, epoxy coated steel, radioisotope symbol, 17 litres 6mm lead, 640H 240W 360D	3	Nil	Nil
BIN034	2	BIN wheelie, 240 litre, 1060H 600W 730D	3	Nil	Nil
BIN037	30	BIN wheelie, 770 litre, 1360H1360W 800D	3	Nil	Nil
BIN2501	379	BIN; sanitary disposal	3	Nil	Nil
BIN2503	103	BIN; sharps disposal	3	Nil	Nil
BIN2504	160	BIN; confidential waste	3	Nil	Nil
BIN2505	5	Bin Sharps disposal lead lined	3	Nil	Nil
BIN2506	1	BIN; disposal; general purpose; MRI compatible; plastic	3	Nil	Nil
BIN2507	10	BIN; nappies	3	Nil	Nil
BIN2508	23	BIN; storage;toy box	3	Nil	Nil
BIN2509	23	BIN; sharps disposal; 7 litre; rail mounted	3	Nil	Nil
BIN900	191	BIN; Recycle waste	3	Nil	Nil
BIN950	26	BIN, wheelie, 360L	3	Nil	Nil
BIN951	26	BIN, wheelie, 240L	3	Nil	Nil
BLA900	1	BLANKET; Cooling	1	£100.00	£100.00
BLA901	2	UNDERBLANKET; Gel 194P	3	Nil	Nil
BLA902	5	UNDERBLANKET; Gel 195P	3	Nil	Nil
BLI2500	60	Blind; total blackout boxed; length as indicated. Wipeable.	1	£150.00	£9,000.00
BLI2501	4	BLIND; ROLLER; length as drawn.	1	£174.37	£697.48
BOA006	31	BOARD; marker; whiteboard; dry-wipe; with pen holder; wall mounted; 1200H 1800W.	1	£96.93	£3,004.83
BOA017	29	BOARD; display/notice; magnetic; wall mounted; 1200H 1200W.	1	£56.69	£1,644.01
BOA022	387	BOARD; display/notice; magnetic; wall mounted; 900H 600W.	1	£44.04	£17,043.48
BOA027	33	BOARD; marker/display; whiteboard; magnetic; dry-wipe; with pen holder; wall mounted; 1200H 1800W.	1	£137.03	£4,521.99
BOA034	114	BOARD; marker; whiteboard; dry-wipe; with pen holder; wall mounted; 600H 900W.	1	£31.09	£3,544.26
BOA037	46	BOARD; marker; whiteboard; dry-wipe; with pen holder; wall mounted; 900H 1200W.	1	£45.13	£2,075.98
BOA051	16	BOARD; flip chart; height adjustable; freestanding	3	Nil	Nil
BOA203	13	BOARD; combined magnetic display/whiteboard; dry-wipe; with pen holder; wall mounted; 1200H 1500W.	1	£94.17	£1,224.21
BOA2500	50	BOARD; marker; whiteboard; dry-wipe; with pen holder; wall mounted; 900H 600W.	1	£31.09	£1,554.50
BOA2501	136	BOARD; combined magnetic display/whiteboard; dry-wipe; with pen holder; wall mounted; 900H 600W	1	£44.04	£5,989.44

Code	Quantity	Description	Group	Rate	Total
BOA2502	126	BOARD; display/notice; magnetic; wall mounted; 900H 1200W	1	£63.02	£7,940.52
BOA2504	53	BOARD; marker; whiteboard; dry-wipe; with pen holder;magnetic; wall mounted; 600H 900W.	1	£44.04	£2,334.12
BOA2505	2	BOARD; flip chart on rails	3	Nil	Nil
BOA2507	22	BOARD; Interactive smartboard	2A	£15.31	£336.82
BOA2508	3	BOARD; marker/display; whiteboard; magnetic; dry-wipe; with pen holder; sliding on rail; 1200H 1800W.	1	£423.87	£1,271.61
BOA2510	12	BOARD; glass fronted; wall mounted; 900H 1200W	1	£221.68	£2,660.16
BOA2511	5	BOARD; black with chalk holder	1	£153.56	£767.80
BOA3501	1	BOARD; Backlit display; Radio Lollipop, to fit available area	2B	Nil	Nil
BOA3503	1	BOARD; Radio Lollipop Activity	2B	Nil	Nil
BOO002	10	BOOKCASE; 2 adjustable shelves; 1160H 800W 290D	2A	£23.08	£230.80
BOO016	11	BOOKCASE; 3 shelves; cupboard under; 1800H 940W 350D	2A	£30.77	£338.47
BOO2501	15	BOOKCASE; full height doors; 900H 600W 350D	2A	£30.77	£461.55
BOO2502	10	BOOKCASE; full height doors; 1800H 600W 350D	3	Nil	Nil
BOT999	1	BOTTLE, warmer; baby	3	Nil	Nil
BOX1000	1	BOX; Returns; Crutches	3	Nil	Nil
BOX1001	3	BOX; for Magpies	3	Nil	Nil
BOX2500	1	CRASH BOX; ambulance; with aerial; NHSL to confirm	3	Nil	Nil
BOX900	5	BOX Carrying; Lead	3	Nil	Nil
BRA003	36	BRACKET, holder, suction unit, wall mounted	2A	£3.96	£142.56
BRA004	227	BRACKET; holder; suction unit; trunking/rail mounted	2A	£3.96	£898.92
BRA010	14	BRACKET; TV; height adjustable; swivel; ceiling mounted.	1	£76.16	£1,066.24
BRA013	195	BRACKET; TV; height adjustable; wall mounted.	1	£34.74	£6;774.30
BRA015	66	BRACKET, flat panel monitor, height adjustable, wall mounted	2A	£10.46	£690.36
BRA2501	1	BRACKET; holder; suction unit; pendant mounted.	1	£25.00	£25.00
BRA2502	129	BRACKET; TV; height adjustable; swivel; wall mounted.	1	£72.37	£9,335.73
BRA2503	1	BRACKET; TV; height adjustable; swivel; ceiling mounted	1	£72.37	£72.37
BRA900	36	BRACKET; computer; height adjustable; tilt & swivel; wall mounted.	1	£180.37	£6,493.32
BRA901	1	Bracket; Monitor oxygen/saturation outside rooms	2A	£3.96	£3.96
BRA902	46	Bracket; Monitor oxygen/saturation inside room	2A	£3.96	£182.16
BRA903	4	BRACKET; 24inch monitor, pendant mounted	1	£61.64	£246.56
BRA904	1	BRACKET; for Wii	2A	£23.08	£23.08
BUC003	5	BUCKET; plaster; with stand; mobile; 900H 300 dia.	3	Nil	Nil
BUC004	169	Bucket; plastic hand pails	3	Nil	Nil
BUT2500	9	Quench button.	2B	Nil	Nil
CAB024	12	CABINET; filing; 2 drawer; 710H 470W 620D	3	Nil	Nil

Code	Quantity	Description	Group	Rate	Total
CAB025	129	CABINET, filing, 4 drawer, 1320H 465W 620D	3	Nil	Nil
CAB034	2	CABINET warming, contrast media, stainless steel, wall mounted	2A	£7.90	£15.80
CAB047	22	CABINET; urine test, lockable, wall mounted.	1	£95.67	£2,104.74
CAB049	17	CABINET, lateral filing, 6 rails, 2 door, 1970H 1000W 470D	3	Nil	Nil
CAB050	5	CABINET; x-ray cassette storage; mobile; 550H 700W 500D	3	Nil	Nil
CAB056	42	CABINET; stationery; metal; 10 drawer with lock; 600H 280W 410D	3	Nil	Nil
CAB057	13	CABINET; lateral filing; 4 rails; 2 door; 1830H 910W 560D	3	Nil	Nil
CAB059	36	CABINET; closed top 2 shelves; 2 suspension filing rails; front panels; 1650H 1000W 470D	3	Nil	Nil
CAB066	80	CABINET; roller shutter; screen-hung/wall mounted; 430H 800W 430D.	1	£122.72	£9,817.60
CAB072	3	CABINET; exhaust protective; Class 1 microbiological safety BS5726; recirculating with integral fan and dual in line hepa filters; 1420H 1200W 620D (10 scopes).	2A	£300.00	£900.00
CAB095	1	CABINET; filing; 5 shelves; 1970H 915W 455D	3	Nil	Nil
CAB1000	5	CABINET; Tamba Storage Unit; 900w x 500d x 1995h	3	Nil	Nil
CAB200	2	CABINET: Class II tissue culture cabinet	1	£3,948.56	£7,897.12
CAB2502	1	CABINET; medicine; wall mounted.	1	£117.80	£117.80
CAB2503	23	CABINET; filing; 4 drawer; lockable; 1320H 465W 620D	3	Nil	Nil
CAB2505	4	CABINET; filing; 2 drawer; lockable; 710H 800W 470D	3	Nil	Nil
CAB2507	36	CABINET;library	1	£150.00	£5,400.00
CAB2508	29	CABINET;library	1	£150.00	£4,350.00
CAB2509	46	CABINET;library	1	£150.00	£6,900.00
CAB2510	27	CABINET;library	1	£150.00	£4,050.00
CAB2513	2	CABINET; filing; 5 shelves;shutter fronts and lockable; 1970H 915W 455D	3	Nil	Nil
CAB2515	1	CABINET; 800x300	3	Nil	Nil
CAB2517	97	CABINET; filing with 3 drawers 1073 mm high x 1200 mm wide	3	Nil	Nil
CAB2520	13	CABINET; double doors 1912 mm high x 1000 mm wide	3	Nil	Nil
CAB2521	12	CABINET; tambour front 997 mm high x 1000 mm wide	3	Nil	Nil
CAB2522	33	CABINET; unit 3 drawers 1073 mm high x 1000 mm wide	3	Nil	Nil
CAB2524	59	CABINET; filing/storage 2300 mm high x 600 mm deep x 1000 mm wide	3	Nil	Nil
CAB2556	1	CABINET; stationery; metal; 15 drawer with lock; 850H 280W 410D	3	Nil	Nil
CAB2565	10	CABINET; warming lothian; 12 x 1 litre; wall mounted lockable.	1	£1,156.65	£11,566.50
CAB300	1	POISONS CABINET: Large, under bench	3	Nil	Nil
CAB301	1	POISONS CABINET: Small, wall mounted	2A	£23.08	£23.08
CAB900	1	CABINET; exhaust protective; Class 1 microbiological safety BS5726; recirculating with integral fan and dual in line hepa filters;(5 scopes).	2A	£300.00	£300.00

Code	Quantity	Description	Group	Rate	Total
CAB901	1	CABINET; display	3	Nil	Nil
CAB902	1	POISONS CABINET: Small, wall mounted.	2A	£23.08	£23.08
CAB903	2	CABINET; equipment, integrated operating theatre	2B	Nil	Nil
CAB950	2	CONSOLE, X-ray , specialist.	2B	Nil	Nil
CAB952	4	CABINETS/WORKTOPS, Dental: Specialist cabinetry as per design layout. Includes WHB, sink, tray system, etc.	2B	Nil	Nil
CAB996	3	CABINET, metal with locking doors for model storage, approx 1000 x 500x 1800mm H	3	Nil	Nil
CAB997	2	CABINET, metal, drugs, 1000W x 500D 1800H	3	Nil	Nil
CAL001	1	BELL/BUZZER push, wall mounted	1	£30.00	£30.00
CAL005	289	CEILING, PULL CORD, patient/staff call.	1	£30.00	£8,670.00
CAL012	2	RESET UNIT, with repeat lamp, patient/staff call	1	£141.55	£283.10
CAL021	2	LAMP repeat staff emergency call; ceiling mounted; (green).	1	£141.55	£283.10
CAL043	278	PUSH BUTTON patient/staff call with socket for extension pear push; trunking mounted.	1	£252.35	£70,153.30
CAL047	406	PUSH BUTTON staff emergency call; reset and integral/adjacent indicator lamp; trunking mounted.	1	£47.39	£19,240.34
CAL1000	4	CALL; nurse call system; to specialist design/specification.	1	£0.00	£0.00
CAM031	59	CAMERA; CCTV; pan/tilt/zoom.	1	£1,723.55	£101,689.45
CAM034C	2	CAMERA, ceiling mounted	1	£2,500.00	£5,000.00
CAM2500	20	VIDEO MONITORING EQUIPMENT; camera.	2A	£250.00	£5,000.00
CAM2503	1	CAMERA; ID badge	3	Nil	Nil
CAM2504	2	CAMERA; CCTV; pan/tilt/zoom; ceiling mounted.	2B	Nil	Nil
CAM2505	5	CAMERA CCTV; pan/tilt/zoom; MRI compatible.	2B	Nil	Nil
CAM2507	3	CAMERA; CCTV; pan/tilt/zoom	1	£2,500.00	£7,500.00
CAN010	7	CANOPY : ultra clean ventilation (UCV) operating theatre, 2000mm clear from floor level to underside, 3200W x3200D, sliding screens.	1	£126,832.26	£887,825.82
CAR001	2	CARREL; single sided study; freestanding; strap light and socket outlet	3	Nil	Nil
CAR010	1	CARREL; gas cylinder; metal frame and uprights; set to floor; cross bars; securing chain; 1300H 900W 500D.	1	£155.24	£155.24
CAS020	45	FIRST AID BOX	2A	£3.96	£178.20
CAS900	3	OPHTHALMOSCOPE; Indirect	3	Nil	Nil
CAT003	2	MINI KITCHEN (combined unit) with refrigerator and microwave; sink top; wall cabinet; cupboard and drawers; laminate backboard; 1970H 1200W 600D	1	£1,029.60	£2,059.20
CAT1000	5	MINI KITCHEN (combined unit) with refrigerator; sink top; wall cabinet; cupboard and drawers; laminate backboard; 1970H 1200W 600D	1	£1,029.60	£5,148.00
CAT1010	10	KITCHEN, regen, specialist equipment, refer to CDS drawings for information	2B	Nil	Nil
CAT1011	14	KITCHEN, specialist equipment, refer to CDS drawings for information	2B	Nil	Nil
CAT1012	2	KITCHEN, restaurant, specialist	2B	Nil	Nil

Code	Quantity	Description	Group	Rate	Total
		equipment, refer to CDS drawings for information			
CAT914	2	STAINLESS STEEL worktop 1500mm long x 650mm deep (920mm height).	1	£280.80	£561.60
CAT936	2	SHELF: Stainless steel 300mm deep as drawn.	1	£93.60	£187.20
CEN003	6	CENTRIFUGE bench mounted; 300H 420W 490D	3	Nil	Nil
CEN004	3	CENTRIFUGE: Swingout rotor, refrigerated, bench top	3	Nil	Nil
CEN012	2	CENTRIFUGE: refrigerated, large, bench top	3	Nil	Nil
CEN023	1	MIKRO CENTRIFUGE	3	Nil	Nil
CEN900	1	MIKRO CENTRIFUGE	3	Nil	Nil
CHA002	1127	CHAIR; height adjustable; medium back; swivel; 5 star base; on castors	3	Nil	Nil
CHA003	1	CHAIR; height adjustable 540-790; tilting back; adjustable footrest; swivel; 5 star base; on glides	3	Nil	Nil
CHA005	242	CHAIR; easy; low back; upholstered	3	Nil	Nil
CHA006	62	CHAIR; easy; with open arms; low back; upholstered	3	Nil	Nil
CHA007	226	CHAIR; easy; with open arms; high back; upholstered, wipeable	3	Nil	Nil
CHA011	2	CHAIR; semi-easy; modular unit; 600W 600D	3	Nil	Nil
CHA017	1574	CHAIR; upright; upholstered; stacking	3	Nil	Nil
CHA018	481	CHAIR; upright; with arms; upholstered; stacking	3	Nil	Nil
CHA021	25	CHAIR; executive; height adjustable; with arms; swivel; 5 star base; on castors	3	Nil	Nil
CHA023	10	CHAIR; upright; wood	3	Nil	Nil
CHA024	23	CHAIR, anaesthetist, height adjustable	3	Nil	Nil
CHA030	22	CHAIR; child; upright; stacking; seat height 280mm	3	Nil	Nil
CHA031	139	CHAIR; child; upright; stacking; seat height 380mm	3	Nil	Nil
CHA032	11	CHAIR; child; upright; stacking; seat height 420mm	3	Nil	Nil
CHA038	6	SANI-CHAIR/COMMODE, tubular, metal, mobile	3	Nil	Nil
CHA040	4	CHAIR; dental; with multi-services; fully adjustable; electrically operated; floor mounted	2B	Nil	Nil
CHA047	6	CHAIR; easy; with open arms; high back; with wings; upholstered	3	Nil	Nil
CHA054	4	CHAIR nursing with side panels	3	Nil	Nil
CHA056	3	CHAIR, venepuncture	3	Nil	Nil
CHA057	8	CHAIR nursing; 830H 600W 670D	3	Nil	Nil
CHA059	11	WHEELCHAIR, folding, self-propelled, 910H 1070W 635D	3	Nil	Nil
CHA062	1	CHAIR; height adjustable; with arms; medium back; swivel; 5 star base; on castors	3	Nil	Nil
CHA063	59	CHAIR; height adjustable; with arms; high back; swivel; 5 star base; on castors	3	Nil	Nil
CHA067	102	UNIT CHAIR; 1 seater; with arms; upholstered	3	Nil	Nil
CHA068	72	UNIT CHAIR with links; 2 seater; with arms; upholstered	3	Nil	Nil
CHA069	40	UNIT CHAIR with links; 3 seater; with arms; upholstered	3	Nil	Nil

Code	Quantity	Description	Group	Rate	Total
CHA072	4	CHAIR; treatment; reclining; height adjustable	3	Nil	Nil
CHA078	26	UNIT CHAIR; easy; with arms; fully upholstered	3	Nil	Nil
CHA079	39	UNIT CHAIR/SETTEE; 2 seater; easy; with arms; fully upholstered	3	Nil	Nil
CHA080	3	UNIT CHAIR/SETTEE; 3 seater; easy; with arms; fully upholstered	3	Nil	Nil
CHA083	51	CHAIR, stacking, polypropylene, with back and seat pads	3	Nil	Nil
CHA085	23	WHEELCHAIR, type transit, (seat 430x430mm), fixed armrests, hinged backrest, 910H 790W 635D	3	Nil	Nil
CHA091	18	CHAIR; easy; reclining; 1000H 630W 1880D	3	Nil	Nil
CHA094	9	CHAIR; bathroom	3	Nil	Nil
CHA095	156	CHAIR; shower; mobile	3	Nil	Nil
CHA1017	2	CHAIR; upright; upholstered; height adjustable	3	Nil	Nil
CHA130	2	CHAMBER; radioisotope; ionisation (Part of CON022)	3	Nil	Nil
CHA2500	17	Chair; childs; upright; lockable; height adjustable	3	Nil	Nil
CHA2502	2	CHAIR; Reflexology chair; as drawn	3	Nil	Nil
CHA2503	1	CHAIR; high; infant feeding	3	Nil	Nil
CHA2505	1	CHAIR; height adjustable; with arms; swivel; 5 star base; on castors	3	Nil	Nil
CHA2506	6	CHAIR; upright; stacking	3	Nil	Nil
CHA2509	4	CHAIR; height adjustable 540-790	3	Nil	Nil
CHA2511	12	CHAIR; child; upright; upholstered; seat height 380mm	3	Nil	Nil
CHA2512	40	CHAIR; upright; with arms; vinyl plastic; stacking	3	Nil	Nil
CHA2513	4	CHAIR; upright; vinyl; stacking	3	Nil	Nil
CHA2514	3	D CHAIR; with safety straps	3	Nil	Nil
CHA2515	6	WHEELCHAIR; self attendant propelled	3	Nil	Nil
CHA302	1	CHAIR, swivel, height adjustable, medium back, wipeable, 5 star base, on castors	3	Nil	Nil
CHA317	19	CHAIR, upright, upholstered, stacking, wipeable	3	Nil	Nil
CHA367	25	UNIT CHAIR, 1 seater, with arms, upholstered, wipeable	3	Nil	Nil
CHA391	4	CHAIR, easy, reclining, wipeable	3	Nil	Nil
CHA900	1	Bariatric Chair	3	Nil	Nil
CHA901	1	CHAIR; X-Ray Dental	2B	Nil	Nil
CHA902	2	CHAIR; Scoliosis	3	Nil	Nil
CHA904	2	WHEELCHAIR; MR Compatible	3	Nil	Nil
CHA905	3	CHAIR; Venepuncture reclining	3	Nil	Nil
CHE2500	1	CHEST; Linen/moses basket storage 4 drawer; 1575H 900W 600D	3	Nil	Nil
CHR900	3	IMAGING CHAIR; Chest Paediatric	3	Nil	Nil
CHR901	1	CHAIR; MR Compatible	3	Nil	Nil
CHR902	2	CHAIR; Saddle Cannulae	3	Nil	Nil
CHR903	6	CHAIR; Saddle Operator	3	Nil	Nil
CHR904	17	CHAIR; with hinged writing table	3	Nil	Nil
CIS004	43	CISTERN disposal unit; concealed; reversible. To suit disposal unit HTM64.	1	£55.83	£2,400.69
CIS005	415	CISTERN, concealed, low level,	1	£55.83	£23,169.45

Code	Quantity	Description	Group	Rate	Total
		reversible, 7.5 litres, 300H 500W 150D			
CLE008	43	SCRUBBING/POLISHING MACHINE, single brush, 110v machine	3	Nil	Nil
CLE009	1	CLEANER VACUUM; dry suction; tub; with accessories; domestic	3	Nil	Nil
CLE018	45	CLEANER VACUUM, dry suction, tub, with accessories, filtered air exhaust	3	Nil	Nil
CLE1000	1	CLEANER VACUUM; Industrial	3	Nil	Nil
CLE900	43	CLEANER VACUUM; Vacumat; 22T; Taski-Johnson Diversey	3	Nil	Nil
CLE901	84	MOPS; box	3	Nil	Nil
CLE902	1	Scrubber-Dryer ride on	3	Nil	Nil
CLE904	44	Fleece poles	3	Nil	Nil
CLE905	43	High dusters	3	Nil	Nil
CLE906	2	SCRUBBER/DRIER	3	Nil	Nil
CLE907	2	Pad drive Harpoon grip 430mm	3	Nil	Nil
CLE908	2	Scrubbing brush 430mm	3	Nil	Nil
CLE909	42	HS Pad drive	3	Nil	Nil
CLE910	42	Scrubbing brush 17	3	Nil	Nil
CLE911	42	Water tank	3	Nil	Nil
CLE912	42	Strainer	3	Nil	Nil
CLE913	42	Mop frame	3	Nil	Nil
CLE914	43	Mop handle	3	Nil	Nil
CLE916	42	DUST PAN	3	Nil	Nil
CLE917	42	SQUEEGEE SWEEPER	3	Nil	Nil
CLE919	2	Steam Cleaner	3	Nil	Nil
CLE920	1	Carpet Shampooer	3	Nil	Nil
CLE921	1	Upholstery kit	3	Nil	Nil
CLE922	42	FREEDOM HANDLE	3	Nil	Nil
CLE923	42	Doodle bug hand scrubber	3	Nil	Nil
CLE924	415	Toilet Brush and Holder	3	Nil	Nil
CLE929	42	Wands (Dusting)	3	Nil	Nil
CLE930	42	Wands Sleeves	3	Nil	Nil
CLE931	42	Interchange Handles	3	Nil	Nil
CLE932	3	Extension pole	3	Nil	Nil
CLI017	95	CLIP; spring; 32mm dia. 3; mounted on a wooden batten; wall mounted.	1	£10.35	£983.25
CLO003	633	CLOCK synchronous with second sweep hand, wall mounted	1	£37.90	£23,990.70
CLO005	1	CLOCK synchronous with second sweep hand, wall mounted	1	£143.10	£143.10
CLO2500	3	CLOCK; digital alarm	3	Nil	Nil
CLO2501	1	CLOCK; desk mounted	3	Nil	Nil
COC001	15	STOP COCK or PLUG VALVE including ball-o-fix.	1	£51.11	£766.65
COM031	77	COMPUTER: standard with keyboard and screen.	3	Nil	Nil
COM033	1199	COMPUTER KEYBOARD	3	Nil	Nil
COM034	3	COMPUTER PRINTER, inkjet, colour	3	Nil	Nil
COM035	73	COMPUTER PRINTER; line; small	3	Nil	Nil
COM038	179	COMPUTER PRINTER, laser, A4, 250H 380W 385D	3	Nil	Nil
COM039	1	COMPUTER, CPU, vertical, specific to radiation therapy software	3	Nil	Nil
COM041	40	COMPUTER PRINTER; SCANNER; PHOTOCOPIER; FAX; A4; 235H 485W	3	Nil	Nil

Code	Quantity	Description	Group	Rate	Total
		390D			
COM047	3	COMPUTER MONITOR, 17in; TFT, digital flat panel display, touch screen, desk top	3	Nil	Nil
COM051	1	COMPUTER MONITOR, 17in; TFT, digital flat panel display, touch screen, bracket mounted	3	Nil	Nil
COM1000	1199	COMPUTER MONITOR; TFT; Sunray digital flat panel display; desk top	3	Nil	Nil
COM2500	27	COMPUTER; PACS; workstation	3	Nil	Nil
COM2501	1	FAX machine	3	Nil	Nil
COM2503	18	COMPUTER MONITOR, PACS REVIEW STATION; 2 21", high-resolution screens,	3	Nil	Nil
COM2506	30	Laptop	3	Nil	Nil
COM2509	108	INTERCOM two way communication system; wall mounted (flush).	1	£250.00	£27,000.00
COM898	1	COMPUTER CPU	3	Nil	Nil
COM899	2	COMPUTER, secret garden installation	3	Nil	Nil
COM900	6	EEG Recorder portable laptop	3	Nil	Nil
COM901	39	DOCKING STATION; tablet	2A	£30.00	£1,170.00
COM904	25	CIS; CART; with CPU ; screen; keyboard & mouse	3	Nil	Nil
COM905	117	IT Tablet	3	Nil	Nil
COM906	1	Computer Server	2B	Nil	Nil
COM907	12	Video conference unit, comprising; Codec eagle eye camera, 40' LCD screen, Unicol Axia workspace trolley etc	3	Nil	Nil
COM908	9	Telemedicine package tandberg 770MXP wall mounted	2B	Nil	Nil
COM909	1	Telemedicine package tandberg 150 desk mounted	2B	Nil	Nil
COM910	1	MONITOR; double CT monitor	2B	Nil	Nil
COM911	1	CONTROL CONSOLE; for CT Injector & hard drive	2B	Nil	Nil
COM912	1	MRI Workstation	2B	Nil	Nil
COM913	3	Hard drive for MRI scanner	2B	Nil	Nil
COM925	2	IT Equipment; use with secret garden installation	3	Nil	Nil
COM930	8	COMPUTER: tablet including cover	3	Nil	Nil
COM931	3	COMPUTER; dual monitor	3	Nil	Nil
COM950	3	Small LCD digital flat panel display screen	2A	£250.00	£750.00
COM951	1	Large LCD digital flat panel display screen	2A	£250.00	£250.00
COM999	5	COMPUTER MONITOR, 23in; TFT, digital flat panel display, wall mounted	3	Nil	Nil
CON022	2	CONTROL UNIT; ionisation chamber; with read out; (Part of CHA130)	3	Nil	Nil
CON061	253	CONE, warning, 'wet floor'	3	Nil	Nil
CON2500	1	CONTROL UNIT; for treadmill.	3	Nil	Nil
CON2501	2	CONTROL UNIT; for sleep system.	3	Nil	Nil
CON2502	3	CONTROL SYSTEM; for sleep; with computer screen	3	Nil	Nil
CON2503	2	Control Unit for induction loop.	1	£100.00	£200.00
CON900	2	Control Unit; fire suppression (Helipad).	1	£100.00	£200.00
CON901	1	Control Unit; lighting (Helipad).	1	£100.00	£100.00
CON902	20	Remote monitor control (cabling integrated into the pendant or WiFi)	3	Nil	Nil

Code	Quantity	Description	Group	Rate	Total
COO002	4	COOKER; electric; four burner; domestic	2A	£100.00	£400.00
COO004	2	COOKER; gas; oven; four burner; domestic	2A	£100.00	£200.00
COO006	6	COOKER CONTROL UNIT; 30amp; wall mounted.	1	£75.00	£450.00
COO2500	2	COOKER; electric; four burner; domestic, variable height	2A	£100.00	£200.00
COP008	21	COPIER; photocopier; collator; floor standing; 800H 1500W 650D	3	Nil	Nil
COU0011	1	Desk; Radio Lollipop Desk; Transfer	2A	£50.00	£50.00
COU1000	19	COUNTER; staff/nurse base; as per detailed design.	1	£2,718.64	£51,654.16
COU1001	15	COUNTER; reception; DDA compliant; with below counter storage; as per detailed design.	1	£1,209.42	£18,141.30
COU2506	79	COUCH; examination/treatment; (3 section); electric; variable height; retractable wheels; with paper roll holder.	3	Nil	Nil
COU2510	2	COUCH; Massage.	3	Nil	Nil
COU900	8	COUCH; examination/treatment; (3 section);electric, variable height; with arms; retractable wheels; bariatric.	3	Nil	Nil
COU901	1	COUNTER; Gamma.	3	Nil	Nil
CRD016	2	ECHOCARDIOGRAPHY MACHINE	3	Nil	Nil
CRD051	1	CONTROL CONSOLE and COMPUTER for catheter laboratories; (Part of CRD021 or CRD023)	2B	Nil	Nil
CRY001	1	CRYOSURGICAL UNIT; with trolley	3	Nil	Nil
CUP006	33	CUPBOARD, flammable material, metal, lockable, liquid retaining shelf, floor standing, 760H 460W 485D	3	Nil	Nil
CUP011	52	CUPBOARD, metal, with 4 pull out galvanised shelves, lockable, 1800H 1000W 500D	3	Nil	Nil
CUP016	4	CUPBOARD, metal, 1 shelf, wall mounted, 600H 600W 300D.	1	£501.22	£2,004.88
CUP021	9	CUPBOARD; 1 shelf; lockable; on plinth; 750H 600W 500D.	1	£104.98	£944.82
CUP027	2	CUPBOARD; 1 shelf; on plinth; 800H 600W 500D.	1	£104.98	£209.96
CUP031	22	CUPBOARD; 1 shelf; on plinth; 800H 1200W 500D.	1	£168.19	£3,700.18
CUP048	16	CUPBOARD; 2 shelves; 1 pull out shelf; lockable; on plinth; 800H 600W 500D.	1	£153.03	£2,448.48
CUP051	10	CUPBOARD; 2 shelves; on plinth; 800H 1200W 500D.	1	£176.10	£1,761.00
CUP076	8	CUPBOARD; 1 shelf; on plinth; 900H 500W 600D.	1	£97.96	£783.68
CUP100	1	CUPBOARD; broom; metal; shelf; lockable; 1800H 600W 450D.	1	£1,185.55	£1,185.55
CUP1000	1	CUPBOARD; opens up for display	3	Nil	Nil
CUP1001	35	CUPBOARD, mobile, 1 shelf, specialist laboratory	3	Nil	Nil
CUP1002	20	CUPBOARD, mobile, with drawer, specialist laboratory	3	Nil	Nil
CUP1003	8	CUPBOARD, mobile, with 4 drawer, specialist laboratory	3	Nil	Nil
CUP112	1	CUPBOARD UNIT; non-ferrous; open; 3 adjustable shelf; on plinth; 850H 1000W 500D.	1	£109.34	£109.34
CUP116	1	CUPBOARD/DRAWER UNIT; non-ferrous; 2 drawer; 1 adjustable shelf; on	1	£227.39	£227.39

Code	Quantity	Description	Group	Rate	Total
		plinth; 850H 1000W 500D.			
CUP142	3	CUPBOARD; fume; with extract; bench mounted; 1050H 1000W 750D.	1	£300.00	£900.00
CUP212	6	CUPBOARD; stationery; metal; shutter front; lockable; 1970H 1000W 470D	3	Nil	Nil
CUP245	25	CUPBOARD; 1 shelf; lockable; wall mounted; 600H 600W 300D.	1	£82.67	£2,066.75
CUP2501	19	CUPBOARD; base unit; LH door; lockable; 500mm.	1	£97.96	£1,861.24
CUP2502	8	CUPBOARD; base unit; RH door; lockable; 500mm.	1	£97.96	£783.68
CUP2503	7	CUPBOARD; base unit; LH door; 1 drawer; lockable; 500mm.	1	£117.54	£822.78
CUP2504	8	CUPBOARD; base unit; RH door; 1 drawer; lockable; 500mm.	1	£117.54	£940.32
CUP2507	24	CUPBOARD; base unit; 4 drawer; lockable; 500mm.	1	£164.98	£3,959.52
CUP2509	34	CUPBOARD; base unit; LH door; lockable; 600mm.	1	£116.83	£3,972.22
CUP2510	61	CUPBOARD; base unit; LH door; ; 600mm.	1	£104.98	£6,403.78
CUP2515	21	CUPBOARD; base unit; 4 drawer; lockable; 600mm.	1	£139.04	£2,919.84
CUP2517	104	CUPBOARD; base unit; 2 door; lockable; 1200mm.	1	£168.19	£17,491.76
CUP2519	15	CUPBOARD; wall unit; LH door; 600h; lockable; 500mm.	1	£82.67	£1,240.05
CUP252	14	CUPBOARD; 2 adjustable shelves; wall mounted; 750H 600W 300D.	1	£82.67	£1,157.38
CUP2520	4	CUPBOARD; wall unit; RH door; 600h; lockable; 500mm.	1	£77.92	£311.68
CUP2522	2	CUPBOARD; Wall.	1	£82.67	£165.34
CUP2523	2	CUPBOARD; Wall	1	£82.67	£165.34
CUP2525	64	CUPBOARD; wall unit; LH door; 600h; lockable; 600mm.	1	£82.67	£5,290.88
CUP2526	82	CUPBOARD; wall unit; RH door; 600h; lockable; 600mm.	1	£82.67	£6,778.94
CUP2531	2	CUPBOARD; wall unit; 2 door; lockable; 600mm.	1	£154.34	£308.68
CUP2535	2	CUPBOARD; metal; with adjustable shelves; lockable; 1800H 1000W 500D	3	Nil	Nil
CUP2536	15	CUPBOARD; 1 shelf; on plinth; 800H 1000W 500D.	1	£154.34	£2,315.10
CUP2538	5	CUPBOARD; base unit; 4 drawer; lockable; 500W 860H 500D.	1	£164.98	£824.90
CUP2540	1	CUPBOARD; key; 30 hooks; lockable; wall mounted; right hand; 305H 230W 70D.	1	£106.68	£106.68
CUP2551	10	CUPBOARD; wall unit; 2 glass door; 600h; lockable; 1000mm.	1	£162.00	£1,620.00
CUP2555	1	CUPBOARD; fume; bench mounted; 1200W 700D	2A	£250.00	£250.00
CUP2563	3	CUPBOARD; 2 shelves; free standing; 800H x 600W x 500D	3	Nil	Nil
CUP2564	8	CUPBOARD; roller shutter door; 1000 x 500 x 1800H.	1	£552.86	£4,422.88
CUP2566	26	CUPBOARD; base unit; RH door; 500mm.	1	£97.96	£2,546.96
CUP2569	6	Generator Cabinet.	2B	Nil	Nil
CUP2570	6	CUPBOARD UNIT; non-ferrous; open; 9 adjustable shelf; on plinth; 1000H 500W 2700D.	1	£324.24	£1,945.44

Code	Quantity	Description	Group	Rate	Total
CUP2572	24	CUPBOARD; base unit; 4 drawer; 500mm.	1	£164.98	£3,959.52
CUP2600	122	CUPBOARD, wall mounted, 600H 1800W 500D.	1	£354.90	£43,297.80
CUP263	48	CUPBOARD; 2 shelves; lockable; wall mounted; 600H 1200W 300D.	1	£136.37	£6,545.76
CUP2997	2	CUPBOARD, flammable store, ducted to CUP142	1	£751.16	£1,502.32
CUP2998	2	CUPBOARD, base unit, 1 door, 1 shelf 600W 300D 880H	1	£125.25	£250.50
CUP2999	2	CUPBOARD, built in, sliding doors, distraction free treatment	1	£1,128.16	£2,256.32
CUP330	1	CUPBOARD; key; 200 hooks; lockable; wall mounted.	1	£1,017.29	£1,017.29
CUP331	1	CUPBOARD; key; 100 hooks; lockable; wall mounted; 275H 380W 140D	1	£106.68	£106.68
CUP332	15	CUPBOARD; key; 30 hooks; lockable; wall mounted; 305H 230W 70D.	1	£106.68	£1,600.20
CUP378	15	CUPBOARD/DRAWER UNIT; 1 drawer; 1 shelf; on castors; 660H 480W 390D	3	Nil	Nil
CUP381	3	CUPBOARD/DRAWER UNIT; 1 drawer; 2 shelves; lockable; 800H 600W 500D.	1	£129.23	£387.69
CUP550	1	CUPBOARD, flammable material, metal, adjustable spillage tray and sump, lockable, 712H 355W 305D	3	Nil	Nil
CUP675	4	CUPBOARD; 1 shelf; on plinth; 850H 600W 500D.	1	£104.98	£419.92
CUP677	1	CUPBOARD/DRAWER UNIT; 2 drawer; on plinth; 850H 600W 500D.	1	£0.00	£0.00
CUP900	1	FLAMMABLE STORE: Under bench	3	Nil	Nil
CUP901	2	CUPBOARD; fume; with extract;1025H 2000W 920D	2B	Nil	Nil
CUP999	12	CUPBOARD, tall for instrument storage for polycarbonate drawers. 450 x 650 x 2000mmH	3	Nil	Nil
CYL2500	9	CYLINDER; oxygen	3	Nil	Nil
CYL2501	2	CYLINDER; carbon dioxide; BOC size L	3	Nil	Nil
CYL2502	2	CYLINDER; nitrogen; BOC size L	3	Nil	Nil
CYL2503	2	CYLINDER; helium	3	Nil	Nil
DEN010	4	DENTAL UNIT; with multi-services terminal	2B	Nil	Nil
DEN2500	1	SURGICAL drill with irrigation - Kavo	2B	Nil	Nil
DEN910	1	DENTAL UNIT; theatre use	2B	Nil	Nil
DES019	348	DESK, cantilever, cable management, 1500W 800D	3	Nil	Nil
DES022	209	DESK; cantilever; single pedestal 3 drawer; cable management; modesty panel; 1600W 800D	3	Nil	Nil
DES027	1	DESK UNIT; cantilever; cable management; adjustable legs; modesty panel; 1600W 800D	3	Nil	Nil
DES028	1	DESK RETURN UNIT; cantilever; cable management; adjustable legs; modesty panel; freestanding; 1200W 600D	3	Nil	Nil
DES2504	1	DESK UNIT; free standing with drawers; cable management; adjustable legs; modesty panel; 1600W 800D	3	Nil	Nil
DES3501	21	DESK, adjustable workstation, 720 - 920H with acoustic screen	3	Nil	Nil
DES3502	1	DESK, nurse station	3	Nil	Nil
DES920	3	DESK, return unit, 600W, 800D, 720H	3	Nil	Nil
DET2500	5	Ferromagnetic detector	1	£2,500.00	£12,500.00

Code	Quantity	Description	Group	Rate	Total
DET900	4	Contamination detectors.	3	Nil	Nil
DEV900	2	DEVICE; Ditto Diversional	3	Nil	Nil
DIA002	4	DIATHERMY APPARATUS; Surgical with 2 suction jars, mobile	3	Nil	Nil
DIA004	10	DIATHERMY UNIT; surgical; monopolar; bipolar; argon compatible; 111H 356W 439D	3	Nil	Nil
DIA005	10	SMOKE EVACUATION SYSTEM; (diathermy) complete with trolley; 860H 487W 643D	3	Nil	Nil
DIA2500	74	DIAGNOSTIC SET; auroscope/opthalmoscope; wall mounted.	2A	£5.92	£438.08
DIA2501	5	DIAGNOSTIC SET; retinoscope/opthalmoscope; wall mounted.	2A	£5.92	£29.60
DIA900	26	DIAGNOSTIC SET; mobile	3	Nil	Nil
DIS002	1	DISPENSER; cooler; drinking water; (fountain); (capacity 63.3 l/hr); floor standing	1	£50.00	£50.00
DIS004	20	DISPENSER, disposable bedpans, wall mounted	2A	£5.92	£118.40
DIS005	20	DISPENSER, disposable urine bottles, wall mounted	2A	£5.92	£118.40
DIS006	16	DISPENSER, disposable nailbrush, wall mounted	2A	£5.92	£94.72
DIS007	36	DISPENSER, paper towel roll, wall mounted	2A	£5.92	£213.12
DIS010	17	DISPENSER; pack; wall mounted; 600H 600W 300D	2A	£5.92	£100.64
DIS011	29	DISPENSER, barrier cream, disposable single cartridge, wall mounted	2A	£5.92	£171.68
DIS013	1113	DISPENSER, paper towel, wall mounted	2A	£5.92	£6,588.96
DIS015	267	DISPENSER, toilet paper, dispense individual sheets, wall mounted	2A	£5.92	£1,580.64
DIS016	4	DISPENSER, paper sheet (for couch/trolley), wall mounted	2A	£5.92	£23.68
DIS024	613	DISPENSER, soap, wall mounted	2A	£5.92	£3,628.96
DIS030	540	DISPENSER, soap, disposable single cartridge, lever action, wall mounted	2A	£5.92	£3,196.80
DIS031	9	DISPENSER; soap; pump action with 500ml container; sink or worktop mounted	2A	£5.92	£53.28
DIS2500	543	DISPENSER; danicentre; combined glove/apron.	2A	£7.90	£4,289.70
DIS2501	23	DISPENSER; disposable vomit bowls; wall mounted.	2A	£5.92	£136.16
DIS2502	6	DISPENSER; plinth roller towel	2A	£5.92	£35.52
DIS2503	1061	DISPENSER; alcohol gel; disposable single cartridge; wall mounted.	2A	£5.92	£6,281.12
DIS2504	1	DISPENSER; Medical hand sanitizer; lever action.	2A	£5.92	£5.92
DIS2505	28	DISPENSER; WATER COOLER, mains supply.	1	£300.00	£8,400.00
DIS2506	8	DISPENSER; cleaning wipes	2A	£5.92	£47.36
DIS2507	14	DISPENSER; alcohol scrub; disposable single cartridge; wall mounted.	2A	£6.15	£86.10
DIS436	1	DISPENSER, disposable apron, wall mounted	2A	£7.18	£7.18
DIS437	11	DISPENSER, disposable mask, wall mounted	2A	£11.84	£130.24
DIS910	4	DISPENSER; gloves x 5 sets.	2A	£7.87	£31.48

Code	Quantity	Description	Group	Rate	Total
DRA023	1	DRAWER UNIT; 3 drawer; 1 shelf pull out with 2 bowl cut-outs; on plinth; 800H 600W 500D.	1	£177.19	£177.19
DRA030	1	DRAWER UNIT; 4 drawer; on plinth; pull out shelf with 2 bowl cut-outs; 750H 600W 500D.	1	£189.25	£189.25
DRA056	711	DRAWER UNIT, 2 drawer, lockable, on castors, 600H 410W 600D	3	Nil	Nil
DRA057	12	DRAWER UNIT, 3 drawer, lockable, on castors, desk height 715H 430W 600D	3	Nil	Nil
DRA060	2	DRAWER UNIT; under worktop; 3 drawer; cut-out to front for film cassettes; 350H 600W 450D.	1	£161.49	£322.98
DRA2500	15	DRAWER UNIT; Plastic;5 drawer; on castors	3	Nil	Nil
DRA2501	1	DRAWER UNIT; paper storage 6 drawer; 900w x 600d x 650h	3	Nil	Nil
DRA2502	2	STORAGE UNIT; stacking unit for artwork; 900w x 600d x 650h	3	Nil	Nil
DRA2556	39	DRAWER UNIT; 3 drawer; lockable; on castors; 670H 410W 600D	3	Nil	Nil
DRA900	24	Drawer for monitoring consumables.	1	£516.50	£12,396.00
DRI2500	4	DRILL; 7 bar power drill	3	Nil	Nil
DRY004	12	DRYER, hand/face, non-touch action, electric, 210H 260W 240D.	1	£800.00	£9,600.00
DRY007	5	DRYER, tumble, heavy duty commercial, 9kg load, 1060H 685W 775D	3	Nil	Nil
DRY2500	21	HAIRDRYER; wall mounted; requires connection unit.	1	£500.00	£10,500.00
DRY900	1	Dryer unit for equipment	3	Nil	Nil
DSU001	23	DISPOSAL UNIT (macerator), disposable bedpan, bedpan liners/urine bottles, 525W 650D	1	£2,314.44	£53,232.12
DSU013	43	DISPOSAL UNIT, hopper with flushing rim, 110mm outlet, no tap holes no overflow, back inlet, stainless steel, 900H 600W 600D	1	£1,220.61	£52,486.23
DYN900	1	DYNAMOMETER, size to be confirmed	3	Nil	Nil
END900	1	Endodontic unit/accessories.	3	Nil	Nil
END901	1	Endodontic unit with heat source/accessories.	3	Nil	Nil
ENT2500	4	ENT Treatment Unit - ATMOS 561 servant	3	Nil	Nil
EPT900	2	Vitality Tester.	3	Nil	Nil
EXE002	2	EXERCISE BARS; junior foldable parallel; 650mm H X 1860mm L X 360mm W	3	Nil	Nil
EXE003	1	EXERCISE BARS; parallel; 3600mm long.	2A	£50.00	£50.00
EXE004	1	EXERCISE BARS; foldable parallel; 1000mm H X 2300mm L X 610mm W	3	Nil	Nil
EXE007	2	EXERCISE BARS; wall; 2400H 920W.	2A	£50.00	£100.00
EXE008	1	EXERCISE BENCH; 400H 3400W 260D	3	Nil	Nil
EXE013	1	EXERCISE STEPS; corner configuration; different heights; 1400H 1230W 1530D	3	Nil	Nil
EXE014	3	EXERCISE BICYCLE; ergometer; 1170 x 530	3	Nil	Nil
EXE016	1	EXERCISE TREADMILL	3	Nil	Nil
EXE101	1	EXERCISE STEPS; retractable; space saving; 1400W 860D	3	Nil	Nil
EXE2501	2	Motamed Bike (Wheelchair Accessible)	3	Nil	Nil

Code	Quantity	Description	Group	Rate	Total
EXE2508	1	Trampoline; mini; 920mm dia.	3	Nil	Nil
EXE2509	1	CROSS TRAINER; 2030 x 940	3	Nil	Nil
EXE2511	1	ROWING MACHINE; 2090 x 540	3	Nil	Nil
EXE2512	1	RECUMBENT BIKE; 1660 x660	3	Nil	Nil
EXE2513	4	RACK; gym ball storage; adjustable; wall mounted	2A	£50.00	£200.00
EXE2517	1	EXERCISE STAIR; corner	3	Nil	Nil
EXE2518	18	EXERCISE MAT; 1520W 2130L	3	Nil	Nil
EXE900	1	EXERCISE SYSTEM; Bicycle	3	Nil	Nil
EXE901	1	MACHINE; unweighting system	3	Nil	Nil
EXT001	4	EXTRACTION SYSTEM, to remove spilled anaesthetic gasses.	1	£50,000.00	£200,000.00
FRA024	1	FRAME; suspended; mesh infill; ceiling mounted; 700W x 1900D.	1	£345.18	£345.18
FRA2501	11	FRAME; double column frame with 12 clear trays; 5 single shelves; runners and shelf clips	3	Nil	Nil
FRA2502	1	FRANKING MACHINE; (neopost)	3	Nil	Nil
FRA900	17	FRAME; A1 Poster	2A	£5.92	£100.64
FRA901	2	FRAME; A2 Poster	2A	£6.15	£12.30
FRA902	1	FRAME; A3 Poster	2A	£6.15	£6.15
GAM1000	1	Gaming; Playstation	3	Nil	Nil
GAM1001	1	Gaming; X-box	3	Nil	Nil
GAM1002	1	Gaming; Wii	1	£300.00	£300.00
GRI8000	1	GRINDER; GP Ortho 2; dust extraction with filter system.	2A	£50.00	£50.00
GRI8001	1	GRINDER; Ortho Mini; fitted with a rubber sanding wheel that takes grinding bands on one side and a chuck on the other to take tools.	2A	£50.00	£50.00
GUI900	7	GUILLOTINE	3	Nil	Nil
HAN902	4	DENTAL HANDPIECES/INSTRUMENTS, reprocessed	4	Nil	Nil
HEA900	3	HEAT GUN; Steinel	3	Nil	Nil
HEA909	1	HEATER, overhead 850W 600D 1750H	1	£5,000.00	£5,000.00
HEA910	2	Hot air gun	3	Nil	Nil
HOI003	22	HOIST PATIENT; chair type mobile	3	Nil	Nil
HOI004	1	HOIST PATIENT; sling type; mobile	3	Nil	Nil
HOI006	118	HOIST PATIENT; electric; 24V; track ceiling mounted (Length of the track to suit the individual needs).	1	£9,500.00	£1,121,000.00
HOL004	29	HOLDER, sack, with lid foot operated, small, freestanding	3	Nil	Nil
HOL005	1630	HOLDER; bin; medium; capacity 70 litres; freestanding.	3	Nil	Nil
HOL008	1	HOLDER, sack with lid foot operated, large, freestanding, 960H 500W 415D	3	Nil	Nil
HOL014	5	HOLDER, sack, with lid foot operated, large, capacity 120 litre, mobile	3	Nil	Nil
HOL020	22	HOLDER, sharps box, up to 7 litre capacity, rail/trolley hang or wall mounted, 170H 125W 100D	3	Nil	Nil
HOL1000	24	HOLDER; bin; plastic lined; freestanding.	3	Nil	Nil
HOL1001	2	HOLDER; A4 Patient Records	2A	£6.15	£12.30
HOO018	57	HOOK; coat; single.	1	£3.80	£216.60
HOO019	781	HOOK, single, small, wall mounted	1	£3.80	£2,967.80
HOO020	474	HOOK, single, large, wall mounted	1	£3.80	£1,801.20

Code	Quantity	Description	Group	Rate	Total
HOO022	316	HOOK; double; wall mounted.	1	£4.57	£1,444.12
HOO024	623	HOOK; hat and coat; 1.	1	£4.57	£2,847.11
HOO061	7	HOOK; limb sling; ceiling mounted	2A	£20.00	£140.00
HOO2500	2	HOOK; single; large; ceiling mounted; for heavy loads.	1	£30.78	£61.56
HOO900	44	Drip hook for water bag required.	1	£25.00	£1,100.00
HOO901	40	Integral adjustable drip stand with 6 hanging hooks.	1	£282.42	£11,296.80
HOO902	24	Hook for suction support: Upper Medirail mounted.	1	£50.00	£1,200.00
HOO903	4	HOOD, extraction for cooker	1	£750.00	£3,000.00
HUM900	17	HUMIDIFIER	3	Nil	Nil
ILL007	3	ILLUMINATOR; x-ray film; single; wall mounted	1	£20.00	£60.00
ILL016	1	ILLUMINATOR; x-ray film; high intensity; portable	3	Nil	Nil
IMG021	5	IMAGE INTENSIFIER UNIT; C-arm; mobile	3	Nil	Nil
IMG023	4	IMAGE INTENSIFIER; monitor; (Part of IMG021)	3	Nil	Nil
IMG024	4	IMAGE INTENSIFIER; monitor trolley; (Part of IMG021)	3	Nil	Nil
IMG025	1	C-ARM MULTI-PURPOSE and X-RAY TUBE FLUOROSCOPY; floor mounted; (intensifier above table; x-ray tube below)	2B	Nil	Nil
IMG066	2	TABLE PATIENT - CT imager; floating top; (Part of IMG2502)	2B	Nil	Nil
IMG072	2	IMAGER GAMMA CAMERA; digital; multi detector/PET; with monitor	2B	Nil	Nil
IMG073	2	TABLE PATIENT - SPECT; gamma camera; variable height; 970/730H 2060W 720D; Part of gamma camera)	2B	Nil	Nil
IMG075	1	IMAGER COLLIMATOR RACK; gamma camera PET; (Included in IMG072 and IMG091)	2B	Nil	Nil
IMG076	8	IMAGER CART exchange collimator; gamma camera; 1270H 670W 910D; (Part of IMG070 and IMG072	2B	Nil	Nil
IMG077	1	CONSOLE UNIT and COMPUTER for gamma camera/PET; 1180H 1040W 900D; (Included in IMG070; IMG071; IMG072 and IMG091)	2B	Nil	Nil
IMG081	2	IMAGER; MAGNETIC RESONANCE IMAGING (MRI); closed bore; 1.5 Tesla unit	2B	Nil	Nil
IMG086	6	TABLE PATIENT - MRI imager; floating top; (Part of IMG081)	2B	Nil	Nil
IMG101	1	MONITOR viewing; flat panel display for image intensifier; ceiling mounted	2B	Nil	Nil
IMG102	2	MONITOR viewing flat panel display for image intensifier; (Part of IMG025; IMG026; IMG028 and IMG030)	2B	Nil	Nil
IMG105	1	TABLE PATIENT - image intensifier; X-ray; floating top; (Part of IMG026; or IMG030)	2B	Nil	Nil
IMG111	2	CONTROL CONSOLE - tableside gantry control for digital imaging system	2B	Nil	Nil
IMG112	4	CONTROL CONSOLE; for MRI	2B	Nil	Nil
IMG116	2	IMAGE GENERATOR/POWER DISTRIBUTION CABINET; (Part of fluoroscopy imager)	2B	Nil	Nil
IMG121	2	IMAGE CS RAIL; ceiling suspensions for monitors	2B	Nil	Nil

Code	Quantity	Description	Group	Rate	Total
IMG131	1	SHIELD lead acrylic; overhead suspended on bracket; 760W 610D lead equivalent 0.5mm Pb; ceiling mounted	2B	Nil	Nil
IMG141	3	IMAGING; Computed Radiography Unit; large high-throughput; CR plate reader; o/a 1720H 730W 720D	2B	Nil	Nil
IMG2500	2	Gamma camera control console	2B	Nil	Nil
IMG2501	5	Coil Holder.	2B	Nil	Nil
IMG2502	2	IMAGER; COMPUTER TOMOGRAPHY (CT) ; 128 slice unit	2B	Nil	Nil
IMG2506	5	READER; CR dental	3	Nil	Nil
IMG2507	16	Wave Guide.	2B	Nil	Nil
IMG2508	2	IMAGER; MAGNETIC RESONANCE IMAGING (MRI); closed bore; 3 Tesla unit	2B	Nil	Nil
IMG2509	10	IMAGING; Camera box.	1	£500.00	£5,000.00
IMG2511	2	Single monitor processing station	3	Nil	Nil
IMG2512	2	CONTROL CONSOLE; for CT	2B	Nil	Nil
IMG901	2	SAM HALL TURNER	3	Nil	Nil
IMG902	2	CONTRAST OVEN	3	Nil	Nil
IMG903	1	Liquid Scintillation counter	3	Nil	Nil
IMG905	1	Biplane Imaging System	2B	Nil	Nil
INC004	7	INCUBATOR; baby	3	Nil	Nil
INC020	1	INCUBATOR: heated, benchtop, with shaker platform	3	Nil	Nil
INC021	2	INCUBATOR for cell culture (not babies)	3	Nil	Nil
IND1000	2	Induction Loop; mobile.	3	Nil	Nil
INF001	90	INFUSION volumetric pump; 356H 178W 178D	3	Nil	Nil
INF900	1	INFUSER; Rapid	3	Nil	Nil
INF901	1	INFUSION volumetric pump; MR Compatible 356H 178W 178D	3	Nil	Nil
INS002	1	INSUFFLATOR; automatic delivery 30L/min; 145H X 300W X 320D	3	Nil	Nil
INT900	2	Intermittent Positive Pressure Breathing & stand	3	Nil	Nil
IRO001	3	IRON: Electric	3	Nil	Nil
IRO002	3	IRON: Board	3	Nil	Nil
IRO003	1	Clothes airer, concertina upright	3	Nil	Nil
IRO901	1	IRON: Rotary machine	3	Nil	Nil
KET001	1	Kettle, electric	3	Nil	Nil
KIC001	3	KICKABOUT; bowl stand; stainless steel; 360mm dia.	3	Nil	Nil
LAB033	1	BENCH MAGNIFIER; with fluorescent lamp; wall mounted	2A	£75.00	£75.00
LAB110	1	STILL; distilled water; with storage tank, wall mounted; 1095H 375W 440D	2A	£75.00	£75.00
LAB136	1	VACUUM SPATULATOR; dental; 550H 255W 230D	2B	Nil	Nil
LAB208	1	PLATE READER	3	Nil	Nil
LAB2503	1	BUNSEN BURNER	3	Nil	Nil
LAB400	4	FREEZER; Laboratory, under bench	3	Nil	Nil
LAB500	2	DRYING OVEN; bench top	3	Nil	Nil
LAB600	4	WATER BATH: heated	3	Nil	Nil
LAB901	5	ENTONOX UNIT; Mobile	3	Nil	Nil
LAB902	2	ENDTIDAL Co2 Unit	3	Nil	Nil
LAB907	1	VIBRATOR, dental 450W 350D 100H	3	Nil	Nil

Code	Quantity	Description	Group	Rate	Total
LAB910	1	POWERPACK; for Muccopolysacchadide electrophoresis.	3	Nil	Nil
LAB911	1	VACUUM PUMP.	3	Nil	Nil
LAB912	1	WATERBATH/SHAKER.	3	Nil	Nil
LAB913	1	FLUORIMETER.	3	Nil	Nil
LAB914	1	LIGHT BOX.	3	Nil	Nil
LAB915	1	AMINO ACID SAMPLER UNIT.	3	Nil	Nil
LAB916	2	VORTEX MIXER.	3	Nil	Nil
LAB917	2	MAGNETIC STIRRER [1 with heater].	3	Nil	Nil
LAB918	1	THERMOPLATE 250 X 360 X 150.	3	Nil	Nil
LAB919	1	DRIBLOCK and sample concentrator 300 X 320 X 550.	3	Nil	Nil
LAB920	1	SPECTROPHOTOMETER 857 X 250 X 650.	3	Nil	Nil
LAB921	1	SCINTILLATION COUNTER 480 X 1030 X 820.	3	Nil	Nil
LAB922	2	ICE MACHINE: bench mounted 430 X 600 X 710.	2A	£15.38	£30.76
LAB923	1	SONICATOR (cell disruptor).	3	Nil	Nil
LAB924	1	ROTAMIXER.	3	Nil	Nil
LAB925	1	WATER DEIONISER.	3	Nil	Nil
LAB926	1	PH METER.	3	Nil	Nil
LAB927	1	GENERATOR: Nitrogen	3	Nil	Nil
LAB928	2	BENCH, laboratory, 1400W 800D	3	Nil	Nil
LAB933	1	BENCH MAGNIFIER; with fluorescent lamp; 120dia 1000H	3	Nil	Nil
LAD001	60	STEP; 3 tread; 4 sprung wheels; 750H 600W 500D	3	Nil	Nil
LAD002	46	LADDER; 3 tread; platform type 750mm height; folding	3	Nil	Nil
LAD2500	5	LADDER; 3 tread; platform type; folding; 1300h 490w 800d	3	Nil	Nil
LAD2501	4	LADDER; 4 tread; platform type; folding; 1700h 565w 1005d	3	Nil	Nil
LAD2502	3	FOOT STEPS: MR compatible	3	Nil	Nil
LAD2503	2	LADDER; MR compatible; folding	3	Nil	Nil
LAT007	1	LATHE POLISHING UNIT; with dust collector; 500H 890W 500D	2B	Nil	Nil
LEC2500	8	LECTERN; with flat top for PC and associated kit in Cupboard	3	Nil	Nil
LEN900	4	LENS SET; Trial	3	Nil	Nil
LIG003	65	LUMINAIRE, reading, adjustable arm, 100 watt	1	£263.09	£17,100.85
LIG005	224	LUMINAIRE, bedhead, dimmable, patient reading and general nursing care/examination	1	£263.09	£58,932.16
LIG015	13	LUMINAIRE observation/examination; mobile; 1000 lux	3	Nil	Nil
LIG046	5	SLIT LAMP; with accessories and height adjustable stand	3	Nil	Nil
LIG050	2	LUMINAIRE operating (minor)	1	£4,500.66	£9,001.32
LIG055	4	LUMINAIRE variable spotlight beam produce around 40000 lux @ 1m and 60000 lux @ 0.8m. flexible arm; wall/ceiling mounted.	1	£5,730.10	£22,920.40
LIG060	2	LUMINAIRE fitted with twin fluorescent lamp.	1	£263.09	£526.18
LIG063	221	LUMINAIRE, single fluorescent lamp, wall, 8 watt, 300 mm	1	£263.09	£58,142.89

Code	Quantity	Description	Group	Rate	Total
LIG065	1	LUMINAIRE fitted with single fluorescent lamp; 58watt; 1500mm; ceiling mounted.	1	£750.00	£750.00
LIG071	50	ILLUMINATED SIGN RADIATION ON, wall mounted	1	£120.04	£6,002.00
LIG073	3	ILLUMINATED SIGN, Room in use	1	£120.04	£360.12
LIG074	30	ILLUMINATED SIGN DO NOT ENTER	1	£120.04	£3,601.20
LIG081	47	LUMINAIRE fitted with single fluorescent lamp with switch; below drug cupboard; 8watt; 400mm.	1	£33.46	£1,572.62
LIG096	6	LUMINAIRE fluorescent asymmetric distribution; 36watt; 1200mm; ceiling mounted	1	£350.00	£2,100.00
LIG1001	3	LUMINAIRE variable spotlight beam produce around 40000 lux @ 1m and 60000 lux @ 0.8m. flexible arm; wall/ceiling mounted.	1	£7,500.00	£22,500.00
LIG2502	5	LUMINAIRE; double arm; operating theatre; table with satellite; shadowless; lux 140000 and lux 110000.	1	£46,350.00	£231,750.00
LIG2503	1	LAMP; freestanding	3	Nil	Nil
LIG2504	10	Head light source	3	Nil	Nil
LIG2505	5	LIGHT; Operating 3 arm	1	£53,358.00	£266,790.00
LIG2506	5	LIGHT; green blue light source.	1	£1,500.00	£7,500.00
LIG3501	1	LIGHT; mirror ball	2B	Nil	Nil
LIG3502	2	LIGHT; spot, use with mirror ball	2B	Nil	Nil
LIG900	20	Uplighter, pendant mounted.	1	£1,500.00	£30,000.00
LIG901	24	Small examination light.	1	£500.00	£12,000.00
LIG902	29	ILLUMINATED SIGN; LASER ON (entrance to theatre).	1	£120.04	£3,481.16
LIG903	15	LUMINAIRE; reading; adjustable arm; 100 watt	1	£350.00	£5,250.00
LIG904	52	LAMP: Bedside with shade	3	Nil	Nil
LIG905	4	LIGHT, curing LED rechargable	4	Nil	Nil
LIG910	26	Task lamp: Anglepoise type.	3	Nil	Nil
LIG958	7	LUMINAIRE; examination; wall; adjustable;	1	£1,750.00	£12,250.00
LIG963	92	LUMINAIRE; examination; ceiling; adjustable.	1	£2,150.00	£197,800.00
LOC002	209	LOCKER, bedside, 3 compartment, towel rail at rear, on castors, 902H 485W 485D	3	Nil	Nil
LOC005	23	LOCKER, CLOTHES, SINGLE, 1800H 300W 550D	3	Nil	Nil
LOC008	748	LOCKER clothes; single; 2 compartments; 1800H 300W 550D	3	Nil	Nil
LOC009	125	LOCKER clothes; single; slimline; 1800H 225W 500D	3	Nil	Nil
LOC012	113	LOCKER; wall mounted; 340H 300W 300D.	1	£41.93	£4,738.09
LOC014	25	LOCKER, 4 compartments, 1800H 300W 450D	3	Nil	Nil
LOC019	139	LOCKER; 6 compartments; 1800H 300W 450D	3	Nil	Nil
LOC030	11	LOCKER; luggage/bag; 3 compartments; 1800H 450W 550D	3	Nil	Nil
LOC1012	8	LOCKER; MR compatible, wall mounted; 340H 300W 300D	1	£500.00	£4,000.00
LOC2502	1	LOCK; entrance; coded.	1	£41.93	£41.93
LOC2503	1	LOCKER; wall mounted; RH; 340H 300W 300D.	1	£41.93	£41.93
LOC902	52	TABLE, bedside, family hotel	3	Nil	Nil

Code	Quantity	Description	Group	Rate	Total
LOC999	11	LOCKER; dry food storage; 3 compartments; on plinth, 1900H 450W 350D	1	£750.00	£8,250.00
LOU003	4	LOUDSPEAKER; ceiling mounted.	1	£49.59	£198.36
LOU903	6	LOUDSPEAKER; wall mounted.	2A	£15.38	£92.28
LSU003	1	SINK laboratory; 300H 450W 420D; HTM67/S3.	1	£1,504.31	£1,504.31
MAC2500	1	ACT Machine on trolley	3	Nil	Nil
MAN1000	1	MANNEQUIN; Heavy Man	3	Nil	Nil
MAN1001	1	MANNEQUIN; half torso, tube feed	3	£10,000.00	£10,000.00
MAT004	196	MATTRESS; Kings Fund bed; standard backrest; 1955L 865W 125D	3	Nil	Nil
MAT006	12	MATTRESS; ITU/CCU bed; extra care	3	Nil	Nil
MAT010	11	MATTRESS, single divan, 1950L 900W	3	Nil	Nil
MAT2502	5	MAT; baby change; 760L 585W 145H	3	Nil	Nil
MAT2503	1	MATTRESS elevator	3	Nil	Nil
MAT900	2	MAT; Crash 1800 X 1200	3	Nil	Nil
MAT901	10	MATTRESS, reliever	3	Nil	Nil
MEA2501	3	MEASURE; Baby; 1230L 460W	2A	£7.90	£23.70
MEA2502	2	MEASURE; Baby height; 215W 474L 570H	2A	£7.90	£15.80
MIC040	4	MICROSCOPE: Conventional	3	Nil	Nil
MIC041	1	MICROSCOPE: Multi-header for instruction with camera and computer	3	Nil	Nil
MIC042	1	MICROSCOPE: Time Lapse	3	Nil	Nil
MIC043	1	MICROSCOPE: Inverted	3	Nil	Nil
MIC2501	1	MICROSCOPE; mobile	3	Nil	Nil
MIC900	1	MICROSCOPE; desk mounted	3	Nil	Nil
MIC901	1	Colposcope	3	Nil	Nil
MIC902	2	MICROMOTOR, dental with control unit, knee or foot operated	2B	Nil	Nil
MIR001	41	MIRROR; wall mounted; 650H 300W.	1	£16.38	£671.58
MIR003	3	MIRROR; wall mounted; 1000H 300W.	1	£18.32	£54.96
MIR004	26	MIRROR; wall mounted; 1600H 400W.	1	£30.22	£785.72
MIR010	57	MIRROR; wall mounted; 800H 300W.	1	£18.23	£1,039.11
MIR012	3	MIRROR; unbreakable/safety glass; mobile; 1600H 500Wl	3	Nil	Nil
MIR023	175	MIRROR; unbreakable; wall mounted; 650H 300W	1	£42.66	£7,465.50
MIR024	83	MIRROR; unbreakable; wall mounted; 800H 300W.	1	£28.11	£2,333.13
MIR026	5	MIRROR, unbreakable, wall mounted, 1300H 500W	1	£127.62	£638.10
MIR2500	192	MIRROR; wall mounted; 1600H 400W unbreakable.	1	£125.94	£24,180.48
MIR2501	10	MIRROR; unbreakable; wall mounted; 1600 H 1600W.	1	£503.79	£5,037.90
MIR2504	2	MIRROR; wall mounted; 1600H 1200W; unbreakable.	1	£365.98	£731.96
MIR901	4	MIRROR, hand	4	Nil	Nil
MNT025	1	GRINDER/SANDER/POLISHER; bench mounted	2A	£50.00	£50.00
MON011	26	MONITOR; electrocardiograph (ECG); 12-lead	3	Nil	Nil
MON014	28	MONITOR; Blood Pressure	3	Nil	Nil
MON017	11	MONITOR and CONTROL for CCTV; complete with flat screen monitor; keyboard; digital recorder (computer) and	1	£750.00	£8,250.00

Code	Quantity	Description	Group	Rate	Total
		power supply.			
MON042	10	MONITOR sedation depth; 169H 175W 100D	3	Nil	Nil
MON051	4	MONITOR; patient; MR compatible; vital signs; multi-parameter; includes pulse oximeter	3	Nil	Nil
MON1001	1	MONITOR; ACCU blood sugar	3	Nil	Nil
MON1002	1	MONITOR; ACCU platelet	3	Nil	Nil
MON1003	1	MONITOR; ROTEM, ACT analyser	3	Nil	Nil
MON2501	10	MONITOR; flat screen; recessed; wall mounted; double PACS theatre specific	2B	Nil	Nil
MON2504	3	MONITOR and CONTROL for CCTV; complete with flat screen monitor; keyboard; digital recorder (computer) and power supply	2B	Nil	Nil
MON2509	5	Central Station linked to monitors: locations to be confirmed by NHSL	3	Nil	Nil
MON2510	1	SIEMENS Via server	2B	Nil	Nil
MON2513	10	MONITOR; 42inch, wall mounted	2B	Nil	Nil
MON2515	2	Injection control monitor	2B	Nil	Nil
MON2517	12	MONITOR; HD screen on arm	3	Nil	Nil
MON2519	1	CT MULTI MODALITY WORKSTATION	2B	Nil	Nil
MON2520	1	MONITOR and CONTROL for Temperature Monitoring System	1	£750.00	£750.00
MON2999	1	MONITOR; Oxygen levels, with bracket	2A	£250.00	£250.00
MON900	106	MONITOR; Low end monitor, general Ward /OPD use	3	Nil	Nil
MON901	3	MONITOR; double MRI monitor	2B	Nil	Nil
MON902	43	MONITOR; Mid range use in Recovery & HDU.	3	Nil	Nil
MON904	76	MONITOR; High end multi-functionality for ITU/Theatre/High Acuity	3	Nil	Nil
MON906	39	MONITOR; Clinical slave	2A	£75.00	£2,925.00
MON907	2	MONITOR; 24inch, operating theatre	2B	Nil	Nil
MON908	2	MONITOR and CONTROL/Intercom for vehicle entry system	1	£1,250.00	£2,500.00
MON909	25	MONITOR; Transport monitor for ITU/Theatre/High Acuity	3	Nil	Nil
MON910	17	MONITOR; Solus screen	2A	£75.00	£1,275.00
MON911	1	TOSCA (trans cutaneous CO2 monitor)	3	Nil	Nil
MON912	180	MONITOR; Oxygen/Saturation	3	Nil	Nil
MON913	2	MONITOR; Bus Tracking monitor	2B	Nil	Nil
MON915	2	MONITOR; Cerebral function	3	Nil	Nil
MON916	44	MONITOR; Apnoea	3	Nil	Nil
MON917	3	MONITOR; Transcutaneous Co2	3	Nil	Nil
MON918	2	MONITOR; Intra-Cranial Pressure	3	Nil	Nil
MON919	3	MONITOR; Portable contamination detection	2B	Nil	Nil
MON920	3	MONITOR; electrocardiograph (ECG); 3 lead	3	Nil	Nil
MON921	3	MONITOR; chiller temperature display	2B	Nil	Nil
MON922	2	MONITOR; oxygen monitoring	2B	Nil	Nil
MON923	3	MONITOR; Personal contamination detection	2A	£250.00	£750.00
MON924	1	MONITOR; for use with remote camera, with bracket	2A	£250.00	£250.00

Code	Quantity	Description	Group	Rate	Total
MSC001	24	CABINET tall; 600mm facing; (600x400 inserts); with formed plastic liners; open; on plinth; o/a height 2100.	1	£228.33	£5,479.92
MSC006	19	CABINET tall; 400mm facing; (400x600 inserts); with formed plastic liners; open; on plinth; o/a height 2100.	1	£233.67	£4,439.73
MSC045	33	CABINET tall; 600mm facing; 1 door hinged right; o/a height 2100.	1	£364.52	£12,029.16
MSC046	34	CABINET tall; 600mm facing; 1 door hinged LEFT; o/a height 2100.	1	£364.52	£12,393.68
MSC081	106	CABINET base; 600mm facing; (600x400 inserts); with formed plastic liners; 1 door hinged right; on plinth; o/a height 900.	1	£140.14	£14,854.84
MSC082	87	CABINET base; 600mm facing; (600x400 inserts); with formed plastic liners; 1 door hinged left; on plinth; o/a height 900.	1	£140.14	£12,192.18
MSC083	3	CABINET base; 600mm facing; (600x400 inserts); with 6 telescopic runners; 1 door hinged right; on plinth; o/a height 900.	1	£206.43	£619.29
MSC085	1	CABINET base; 600mm facing; (600x400 inserts); with 3 telescopic runners; 1 door hinged right; on plinth; o/a height 900.	1	£165.55	£165.55
MSC091	40	CABINET base; 400mm facing; (400x600 inserts); with formed plastic liners; 1 door hinged right; on plinth; o/a height 900.	1	£135.73	£5,429.20
MSC092	35	CABINET base; 400mm facing; (400x600 inserts); with formed plastic liners; 1 door hinged left; on plinth; o/a height 900.	1	£137.32	£4,806.20
MSC096	7	CABINET base; 400mm facing; (400x600 inserts); with 3 telescopic runners; 1 door hinged left; on plinth; o/a height 900.	1	£158.81	£1,111.67
MSC122	23	CABINET top; 400mm facing; (400x300 inserts); with formed plastic liners; 1 door hinged right; wall mounted.	1	£106.64	£2,452.72
MSC123	40	CABINET top; 400mm facing; (400x300 inserts); with formed plastic liners; 1 door hinged left; wall mounted.	1	£106.64	£4,265.60
MSC127	72	CABINET top; 600mm facing; (600x400 inserts); with formed plastic liners; 1 door hinged right; wall mounted.	1	£137.32	£9,887.04
MSC128	76	CABINET top; 600mm facing; (600x400 inserts); with formed plastic liners; 1 door hinged left; wall mounted.	1	£137.32	£10,436.32
MSC154	6	CABINET tall; 600mm facing; with 6 shelves; roller shutter; on plinth; lockable. o/a height 2100.	1	£447.74	£2,686.44
MSC157	3	CABINET tall; 400mm facing; with 6 shelves; 1 door hinged right; on plinth; o/a height 2100.	1	£306.92	£920.76
MSC158	4	CABINET tall; 400mm facing; with 6 shelves; 1 door hinged left; on plinth; o/a height 2100.	1	£306.92	£1,227.68
MSC162	2	CABINET tall; 600mm facing; with 5 shelves; 1 door hinged right; on plinth; o/a height 1700.	1	£276.87	£553.74
MSC163	2	CABINET tall; 600mm facing; with 5 shelves; 1 door hinged left; on plinth; o/a height 1700.	1	£276.87	£553.74
MSC182	6	CABINET base; 600mm facing; with 2 shelves; 1 door hinged right; on plinth; o/a height 900.	1	£141.31	£847.86
MSC183	3	CABINET base; 600mm facing; with 2 shelves; 1 door hinged left; on plinth; o/a height 900.	1	£141.31	£423.93

Code	Quantity	Description	Group	Rate	Total
MSC187	10	CABINET base; 400mm facing; with 2 shelves; 1 door hinged right; on plinth; o/a height 900.	1	£136.95	£1,369.50
MSC188	10	CABINET base; 400mm facing; with 2 shelves; 1 door hinged left; on plinth; o/a height 900.	1	£136.95	£1,369.50
MSC192	2	CABINET top; 400mm facing; with 1 shelf; 1 door hinged right; wall mounted	1	£110.57	£221.14
MSC193	2	CABINET top; 400mm facing; with 1 shelf; 1 door hinged left; wall mounted.	1	£110.57	£221.14
MSC197	40	CABINET top; 600mm facing; with 1 shelf; 1 door hinged right; wall mounted.	1	£122.79	£4,911.60
MSC198	23	CABINET top; 600mm facing; with 1 shelf; 1 door hinged left; wall mounted.	1	£122.79	£2,824.17
MSC2502	1	CABINET base; 600mm facing; (600x400 inserts); with formed plastic liners; 1 door hinged right; lockable; on plinth; o/a height 900.	1	£140.14	£140.14
MSC2503	2	CABINET base; 600mm facing; (600x400 inserts); with formed plastic liners; 1 door hinged right; lockable; on plinth; o/a height 900	1	£140.14	£280.28
MSC2504	3	CABINET top; 600mm facing; (600x400 inserts); with formed plastic liners; 1 door hinged right; lockable; wall mounted.	1	£137.32	£411.96
MSC2505	2	CABINET top; 600mm facing; (600x400 inserts); with formed plastic liners; 1 door hinged left; lockable; wall mounted.	1	£137.32	£274.64
MSC2507	6	CABINET top; 600mm facing; (600x400 inserts); with formed plastic liners; shelves; 1 door hinged right; wall mounted.	1	£137.32	£823.92
MSC2508	17	CABINET top; 600mm facing; (600x400 inserts); with formed plastic liners; shelves; 1 door hinged left; wall mounted.	1	£137.32	£2,334.44
MSC2510	12	CABINET base; 1000mm facing; (1000x400 inserts); with formed plastic liners; 1 door hinged right; on plinth; o/a height 900.	1	£135.73	£1,628.76
MSC2511	5	CUPBOARD; 600mm facing; medicine; 1 door hinged left; 1700mm.	1	£730.46	£3,652.30
MSC2515	21	CABINET base; 600mm facing; (600x400 inserts); with formed plastic liners; 1 door hinged right; lockable; shelved; on plinth; o/a height 900.	1	£140.14	£2,942.94
MSC2516	13	CABINET base; 600mm facing; (600x400 inserts); with formed plastic liners; 1 door hinged left; lockable; shelved; on plinth; o/a height 900.	1	£140.14	£1,821.82
MSC2518	3	CABINET top; 400mm facing; (400x300 inserts); with formed plastic liners; 1 door hinged left; lockable; shelved; wall mounted.	1	£135.73	£407.19
MSC2519	8	CABINET top; 600mm facing; (600x400 inserts); with formed plastic liners; 1 door hinged right; lockable; shelved; wall mounted.	1	£140.14	£1,121.12
MSC2520	7	CABINET top; 600mm facing; (600x400 inserts); with formed plastic liners; 1 door hinged left; lockable; shelved; wall mounted.	1	£140.14	£980.98
MSC2529	2	CABINET base; 600mm facing; (600x400 inserts); with telescopic runners; 1 door hinged right; on plinth; o/a height 900.	1	£206.43	£412.86

Code	Quantity	Description	Group	Rate	Total
MSC253	4	CABINET/DRAWER features; base; 600mm facing; 4 drawer; on plinth; o/a height 900.	1	£308.02	£1,232.08
MSC2530	2	CABINET base; 400mm facing; (400x600 inserts); with formed plastic liners; 1 door hinged right; on plinth; o/a height 780.	1	£135.73	£271.46
MSC2531	2	CABINET base; 400mm facing; (400x600 inserts); with formed plastic liners; 1 door hinged left; on plinth; o/a height 780.	1	£137.32	£274.64
MSC2532	2	CABINET base; 400mm facing; (400x600 inserts); with 3 telescopic runners; 1 door hinged left; on plinth; o/a height 780.	1	£173.99	£347.98
MSC2533	5	CABINET base; drawer line, 400mm facing; (400x600 inserts); with formed plastic liners; 1 door hinged right; on plinth; o/a height 680.	1	£142.10	£710.50
MSC2535	6	CABINET base; drawer lined, 400mm facing; (400x600 inserts); with formed plastic liners; 1 door hinged left; on plinth; o/a height 680.	1	£142.10	£852.60
MSC262	14	CABINET/DRAWER features; base; 400mm facing; 3 drawer; on plinth; o/a height 900.	1	£265.30	£3,714.20
MSC263	6	CABINET/DRAWER features; base; 400mm facing; 4 drawer; on plinth; o/a height 900.	1	£319.85	£1,919.10
MSC501	2	PHARMACY CABINET; 600mm facing; with 4 shelves; 1 pull out prep. shelf; warning light; 1 door hinged right w/security lock; o/a height 1200.	1	£357.49	£714.98
MSC503	24	PHARMACY CABINET; 600mm facing; with 4 shelves; 1 pull out prep. shelf; controlled drugs cupboard; warning light; 1 door hinged right w/security safe lock; o/a height 1200.	1	£548.88	£13,173.12
MSC981	8	CABINET base; 600mm facing; (600x400 inserts); with formed plastic liners; vertical tambour front; on plinth; o/a height 880	1	£427.89	£3,423.12
MSF021	31	FRAME long span shelving supports; with distance pieces; 1 bay; 600mm deep; 5 shelf (4 adjustable); steel; 2130H 1000W 665D nominal.	1	£708.05	£21,949.55
MSF022	44	FRAME long span shelving supports; with distance pieces; additional bay; 600mm deep; 5 shelf (4 adjustable); steel; 2100H 1000W 665D nominal.	1	£608.98	£26,795.12
MSF026	59	FRAME long span shelving supports; with distance pieces; 1 bay; 400mm deep; 5 shelf (4 adjustable); steel; 2130H 1000W 465D nominal.	1	£708.05	£41,774.95
MSF027	120	FRAME long span shelving supports; with distance pieces; additional bay; 400mm deep; 5 shelf (4 adjustable); steel; 2130H 1000W 465D nominal.	1	£608.98	£73,077.60
MSF2500	11	FRAME long span shelving supports; with distance pieces; 1 bay; 450mm deep; 5 shelf (4 adjustable); steel.	1	£717.19	£7,889.09
MST001	50	TROLLEY; single open frame; with handle; up to 5 sets of runners; 600mm facing; approx 850H 730W 450D	3	Nil	Nil
MST005	50	TROLLEY; half size open frame; up to 5 sets of runners; 400mm facing; approx 850H 450W 350D	3	Nil	Nil

Code	Quantity	Description	Group	Rate	Total
MST007	61	TROLLEY; lockable; closed; with worktop; approx 900H 660W 500D; 600mm facing	3	Nil	Nil
MST011	5	TROLLEY; large, single with handles, 12 sets of runners, 400 facing, buffered, braked, 1800H 600W 650D nominal	3	Nil	Nil
MST901	7	TROLLEY; lockable; closed; with worktop; approx 1200H 1300W 500D	3	Nil	Nil
NAN010	1	NANODROP	3	Nil	Nil
NCU001	12	BABY NAPPY CHANGING UNIT; folds up base; heavy duty plastic; safety straps; wall mounted; 900H 560W 885D.	1	£260.79	£3,129.48
NCU002	2	BABY NAPPY CHANGING UNIT; mobile, fold up base; 900H 560W 885D.	3	Nil	Nil
OFF2500	12	LAMINATOR	3	Nil	Nil
OPH003	1	ANALYSER; visual field; on stand (Goldman Perminter)	3	Nil	Nil
OUT001	1	OUTLET cable fused; wall/trunking mounted.	1	£83.74	£83.74
OUT002	7	OUTLET, cable 13amp	1	£83.74	£586.18
OUT004	152	OUTLET cable, fused, 13 amp, ceiling mounted	1	£83.74	£12,728.48
OUT005	1779	SOCKET outlet, switched, 13amp, single	1	£37.90	£67,424.10
OUT006	110	SOCKET outlet unswitched 13amp single; wall mounted.	1	£37.90	£4,169.00
OUT009	817	SOCKET outlet switched 13 amp twin; floor mounted.	1	£78.23	£63,913.91
OUT010	5208	SOCKET outlet, switched, 13amp, twin	1	£40.54	£211,132.32
OUT011	215	SOCKET outlet switched 13amp twin; pilot light.	1	£35.59	£7,651.85
OUT012	3026	SOCKET outlet switched 13amp twin; trunking/pendant mounted.	1	£24.69	£74,711.94
OUT023	4	SOCKET outlet switched.30amp single, wall mounted.	1	£70.29	£281.16
OUT025	192	SOCKET outlet, shaver	1	£78.23	£15,020.16
OUT026	7	SOCKET outlet switched 30amp single; TP&N; wall mounted.	1	£70.29	£492.03
OUT030	28	SOCKET, outlet switched, 13amp single, splash proof.	1	£76.89	£2,152.92
OUT032	12	SOCKET outlet switched 13amp double; splashproof.	1	£76.89	£922.68
OUT046	2	CONNECTION UNIT, unswitched, 13amp, flex outlet	1	£32.37	£64.74
OUT049	38	CONNECTION UNIT, switched, 13amp, flex outlet	1	£37.88	£1,439.44
OUT050	47	OUTLET, controlled drugs cupboard	1	£43.60	£2,049.20
OUT052	213	CONNECTION UNIT, switched, 13 amp	1	£33.88	£7,216.44
OUT054	40	CONNECTION UNIT, unswitched, 13 amp, neon indicator	1	£41.30	£1,652.00
OUT056	13	CONNECTION UNIT, unswitched, 13 amp	1	£32.37	£420.81
OUT059	186	CONNECTION UNIT switched 13amp, indicator light	1	£41.30	£7,681.80
OUT067	1	OUTLET isolator 15amp; TP&N.	1	£60.87	£60.87
OUT075	25	OUTLET isolator 20amp; TP&N; wall mounted.	1	£47.69	£1,192.25
OUT079	12	OUTLET isolator, equipment manufacturer's specification	1	£47.69	£572.28
OUT095	88	Earth bonding point, pendant mounted.	1	£125.00	£11,000.00
OUT101	4	SOCKET outlet extra low voltage 13amp; switched; single; wall mounted.	1	£50.00	£200.00

Code	Quantity	Description	Group	Rate	Total
OUT121	1076	SOCKET outlet; computer data; double.	1	£39.30	£42,286.80
OUT122	758	SOCKET outlet computer data; floor mounted.	1	£39.55	£29,978.90
OUT126	5	SOCKET outlet switched 13amp double; with data protection mains RF filter/suppressor.	1	£200.00	£1,000.00
OUT131	2614	SOCKET outlet double data/voice; wall/trunking mounted.	1	£33.79	£88,327.06
OUT133	20	Outlet, video telemetry.	1	£200.00	£4,000.00
OUT201	1	SOCKET outlet; single V.H.F. radio aerial; wall mounted.	1	£50.00	£50.00
OUT206	349	SOCKET outlet television aerial; single; wall mounted.	1	£19.48	£6,798.52
OUT207	4	SOCKET outlet aerial television, closed circuit (CCTV), wall mounted	1	£20.03	£80.12
OUT208	8	SOCKET outlet television aerial; single; ceiling mounted.	1	£39.30	£314.40
OUT210	101	SOCKET outlet two-way communication system (intercom), wall mounted	1	£8.12	£820.12
OUT215	169	SOCKET outlet, telephone	1	£25.33	£4,280.77
OUT2500	15	OUTLET; connection for IPOD.	1	£50.00	£750.00
OUT2501	2	OUTLET drinking water; hot and cold for equipment.	1	£250.00	£500.00
OUT2502	22	LOOP; induction.	1	£1,500.00	£33,000.00
OUT2503	33	SOCKET; outlet switched 13amp double; ceiling mounted.	1	£40.54	£1,337.82
OUT2504	19	SOCKET; outlet data; ceiling mounted.	1	£39.30	£746.70
OUT2505	1	SOCKET outlet television; Sky dish; single; wall mounted.	1	£250.00	£250.00
OUT2508	22	SOCKET outlet computer double data; floor mounted.	1	£78.23	£1,721.06
OUT2509	8	SOCKET; Telemedicine.	1	£200.00	£1,600.00
OUT2512	84	SOCKET outlet; video entry.	1	£200.00	£16,800.00
OUT301	54	OUTLET, cold water for equipment	1	£79.57	£4,296.78
OUT305	8	OUTLET hot water for equipment.	1	£79.57	£636.56
OUT315	98	OUTLET, drinking water for equipment	1	£79.57	£7,797.86
OUT341	35	OUTLET, drainage, anti-syphon	1	£79.57	£2,784.95
OUT345	21	OUTLET, floor drainage and grating, 150 mm dia. hospital pattern.	1	£253.90	£5,331.90
OUT406	6	OUTLET dental compressed air 5.5kPA; wall mounted.	1	£73.75	£442.50
OUT435	3	OUTLET; natural gas connection for equipment.	1	£73.75	£221.25
OUT452	379	OUTLET; 4 kPa compressed air medical; trunking mounted.	1	£73.75	£27,951.25
OUT453	69	OUTLET, 4kPa compressed air, medical	1	£73.75	£5,088.75
OUT454	38	OUTLET, 7kPa compressed air, medical	1	£73.75	£2,802.50
OUT461	67	OUTLET, nitrous oxide, medical	1	£73.75	£4,941.25
OUT462	1	OUTLET; nitrous oxide/oxygen mixture medical; trunking mounted.	1	£73.75	£73.75
OUT463	12	OUTLET; nitrous oxide; medical, trunking mounted.	1	£73.75	£885.00
OUT470	219	OUTLET, oxygen, medical	1	£73.75	£16,151.25
OUT471	604	OUTLET; oxygen medical; trunking mounted.	1	£73.75	£44,545.00
OUT475	210	OUTLET, vacuum, medical	1	£73.75	£15,487.50
OUT476	397	OUTLET; vacuum medical; trunking mounted.	1	£73.75	£29,278.75
OUT480	104	OUTLET, gas scavenging (AGS), medical	1	£102.37	£10,646.48

Code	Quantity	Description	Group	Rate	Total
OUT481	12	OUTLET; gas scavenging (AGS); medical, trunking mounted.	1	£102.37	£1,228.44
OUT491	3	OUTLET; carbon dioxide; trunking mounted.	1	£73.75	£221.25
OUT900	44	Data Input Box for CIS with 16 input channels (Lantronix): uses 1 plug, 1 data point	3	Nil	Nil
OUT901	18	SOCKET; outlet solus screen.	1	£150.00	£2,700.00
OUT903	8	OUTLET; video	1	£150.00	£1,200.00
OUT904	150	OUTLET; socket, AV and control system, typt tbc	1	£150.00	£22,500.00
OUT910	1	OUTLET; helium; trunking mounted	1	£150.00	£150.00
OVE013	1	OVEN, microwave, heavy duty, 1600watt, capacity 26 litre, 370H 465W 560D	3	Nil	Nil
OVE014	6	OVEN, microwave, light duty, 1000watt, capacity 26 litres, 295H 295W 410D	3	Nil	Nil
OVE015	35	OVEN; microwave; super heavy duty; 1850watt; capacity 26 litres; stainless steel; 370H 465W 615D	3	Nil	Nil
OXI2500	5	OXIMETER	3	Nil	Nil
PAD2500	2	PAD; kneeling	3	Nil	Nil
PAN053	10	PANEL operating theatre; to meet the theatre requirements.	1	£11,592.00	£115,920.00
PAN063	83	PANEL; indicator.	1	£3,000.00	£249,000.00
PAN2500	7	PANEL; syringe injector controller.	2B	Nil	Nil
PAN900	1	HEATING PAN; non stick; 28 X 28 X 5	3	Nil	Nil
PAN901	2	PANEL; integrated, theatre control, from light fitting	2B	Nil	Nil
PAR016	7	Partition; 1300x100x1600.	1	£96.00	£672.00
PAR1000	4	Partition; 1400hx1200lx50t.	1	£250.00	£1,000.00
PCR010	2	PCR MACHINE	3	Nil	Nil
PEG002	37	PEGS; equipment; medium; 2; wide spacing; wall mounted.	1	£15.95	£590.15
PEG2500	21	HOOK; Pat Slide.	1	£47.19	£990.99
PEN002	35	PENDANT; Anaesthetic; medical & power supply unit; vertical movement; ceiling mounted; outlets comprising.	1	£8,827.87	£308,975.45
PEN006	2	PENDANT SURGICAL; touch screen monitor; medical and power supply unit; tandem; lateral and vertical movement; ceiling mounted; outlets comprising.	1	£14,301.68	£28,603.36
PEN006A	4	PENDANT SURGICAL; touch screen monitor; medical and power supply unit; tandem; lateral and vertical movement; ceiling mounted; outlets comprising.	1	£14,301.68	£57,206.72
PEN1000L	20	PENDANT; critical care; twin arm; left hand monitor arm, with elbow joints; multi movement.	1	£22,506.80	£450,136.00
PEN1000R	20	PENDANT; critical care; twin arm; right hand monitor arm, with elbow joints; multi movement.	1	£22,506.80	£450,136.00
PEN1004	24	PENDANT; critical care; CIS; single arm with elbow joints; multi movement (to NHSL specification).	1	£8,710.00	£209,040.00
PEN1005	4	PENDANT; critical care; single arm (to NHSL specification).	1	£12,861.46	£51,445.84
PEN2504	1	PENDANT; Anaesthetic; medical & power supply unit; vertical movement; ceiling mounted; outlets comprising: MRI compatible.	1	£8,361.22	£8,361.22

Code	Quantity	Description	Group	Rate	Total
PEN900	8	PENDANT RESUSCITATION, medical gases and power supply unit, fixed location, ceiling mounted, medical gases and power outlets comprising:	1	£9,344.82	£74,758.56
PFT2500	1	Master PFT pro & body box	3	Nil	Nil
PHO901	1	PHOTOTHERAPY, lamp, mobile unit	3	Nil	Nil
PIA2500	2	PIANO	3	Nil	Nil
PIG016	9	PIGEONHOLE UNIT; two level; 12 compartments; wall mounted; 800H 1000W 450D.	1	£146.53	£1,318.77
PIN900	3	MAYFIELD PIN HEAD REST (Carbon)	3	Nil	Nil
PLA002	69	PLATFORM; step-stand; stackable; portable; 130H 480W 330D	3	Nil	Nil
PLA900	4	PHOSPHOR PLATES, for CR reader	4	Nil	Nil
PLI040	2	PLINTH; Bobath centre; height adjustable (380-910mm) and head section; 910H 1900W 1200D	3	Nil	Nil
PLI041	11	PLINTH; 3 section; variable height 380/1010H 1880W 710D	3	Nil	Nil
PLI042	2	PLINTH; 3 section; variable height 380/1010H 2100W 1000D	3	Nil	Nil
PLI2500	3	Plinth; patient	3	Nil	Nil
PNU2500	21	PNEUMATIC Tube System, with digital control panel, cage underneath.	1	£5,000.00	£105,000.00
POL901	3	POLE, for use with equipment charging, floor to ceiling	1	£250.00	£750.00
PPE001	8	1.2 m sided square fire resistant blanket	3	Nil	Nil
PPE002	1	105cm crowbar	3	Nil	Nil
PPE003	1	15 m life-line of 50cm circumference	3	Nil	Nil
PPE004	1	3 m ladder	3	Nil	Nil
PPE005	1	60cm bolt cutters	3	Nil	Nil
PPE006	1	Adjustable Wrench	3	Nil	Nil
PPE007	12	Foil blankets	3	Nil	Nil
PPE008	1	General purpose eclipse-type saw	3	Nil	Nil
PPE009	1	Grab hook	3	Nil	Nil
PPE010	1	Heavy-duty hacksaw	3	Nil	Nil
PPE011	1	Large rescue axe	3	Nil	Nil
PPE012	2	Medical pack with specified contents	3	Nil	Nil
PPE013	1	Power saw	3	Nil	Nil
PPE014	1	Resuscitation pocket mask	3	Nil	Nil
PPE015	1	Set of assorted screwdrivers	3	Nil	Nil
PPE016	1	Side cutting pliers	3	Nil	Nil
PPE017	7	Boots	3	Nil	Nil
PPE018	7	Fire resistant Gloves (pair)	3	Nil	Nil
PPE019	12	Harness Knife & sheath	3	Nil	Nil
PPE020	7	Helmet with flash hood	3	Nil	Nil
PPE021	7	Tunic & trousers	3	Nil	Nil
PPE023	4	Stretchers	3	Nil	Nil
PRI015	212	PRINTER; label; portable	3	Nil	Nil
PRI2500	2	Bar Code; reader	3	Nil	Nil
PRI900	3	Printer; high spec	3	Nil	Nil
PRO023	1	PROJECTOR; overhead	2A	£200.00	£200.00
PRO026	25	PROJECTOR; multi-media; ceiling mounted	2A	£200.00	£5,000.00
PRO901	1	PROJECTOR, rise and fall houseing unit, ceiling mounted	2A	£250.00	£250.00

Code	Quantity	Description	Group	Rate	Total
RAC001	1	RACK, drainage, bedpan holder (5), with drip tray, wall mounted	2A	£15.38	£15.38
RAC010	2	RACK; draining equipment; wall mounted; 450H 300W 150D.	1	£84.11	£168.22
RAC062	1	RACK; gas cylinder; holds 2 cylinders 670 long with diameter 180-270mm; wall mounted; 1000H 550W 350D	2A	£19.76	£19.76
RAC067	4	RACK; 12 medical gas cylinder; 845H 1200W 860D	3	Nil	Nil
RAC069	4	RACK; medical gas; 6 cylinder; 800l x 180d	3	Nil	Nil
RAC076	4	CABINET, 1800H 785W 400D	1	£162.74	£650.96
RAC089	9	RACK; leaflet/pamphlet; 4 sections; with adjustable dividers; wall mounted; 300H 805W 215D.	1	£30.77	£276.93
RAC090	4	RACK, leaflet/pamphlet, single section, 5 dividers, wall mounted, 150H 1000W 100D	1	£30.77	£123.08
RAC091	18	RACK; magazine; 3 shelves; floor standing; fixed to the wall; 1400H 900W 300D.	1	£126.61	£2,278.98
RAC094	1	RACK; magazine; double sided; mobile	3	Nil	Nil
RAC1000	1	RACK; educational brochures; mobile	3	Nil	Nil
RAC1001	4	RACK; clothes drying; indoor	3	Nil	Nil
RAC1002	1	RACK; Shelving for splinting material; 1100w x 600d x 1100h.	3	Nil	Nil
RAC155	6	RACK shoe; (bridge unit base between lockers assembly) 175H 900W 450D.	1	£88.12	£528.72
RAC156	24	RACK shoe; double; stainless steel with hooks (holds 6-8 pairs); 200H 600W 305D.	1	£300.53	£7,212.72
RAC191	6	RACK, vertical, open front, wall mounted, 1800H 1200W 300D	2A	£46.15	£276.90
RAC194	3	RACK; x-ray lead apron; 3 hangers; wall mounted	2A	£11.86	£35.58
RAC195	3	RACK; x-ray lead apron; 5 hangers; wall mounted	2A	£11.86	£35.58
RAC196	20	RACK, x-ray lead apron, 5 hangers hinged, wall mounted	2A	£11.86	£237.20
RAC197	11	RACK; x-ray lead apron; 6 swivel arms; mobile	3	Nil	Nil
RAC2500	1	RACK; magazine; double sided; mobile; MRI compatible	3	Nil	Nil
RAC360	2	RACK; catheter and guide wire storage; rotary; mobile; wire basket; top 600x600mm; 800mm dia. 230H 600W 600D	3	Nil	Nil
RAC362	193	RACK; catheter; vertical; 2 compartments; 420H 160W 65D	2A	£15.31	£2,954.83
RAC403	3	RACK; metal; 3 internal shelves; 1850H 1000W 480D.	1	£220.33	£660.99
RAC405	1	RACK; metal; 1 bay; 4 shelves; 1980H 900W 450D.	1	£202.02	£202.02
RAC409	18	RACK; metal; 1 bay; 4 shelves; 1980H 1200W 450D.	1	£208.12	£3,746.16
RAC422	7	RACK; metal; 2 bays; 4 shelves; 2000H 1800W 600D.	1	£423.03	£2,961.21
RAC425	2	RACK; metal; 2 bays; 4 shelves; 1980H 1800W 450D.	1	£413.90	£827.80
RAC440	19	RACK; leaflet; wall mounted; 915H 250W 105D.	1	£30.77	£584.63
RAC445	38	RACK UNIT; metal; 1 bay; single sided; 5 fixed shelves with dividers; 2215H 900W	1	£259.95	£9,878.10

Code	Quantity	Description	Group	Rate	Total
		300D.			
RAC450	8	RACK UNIT; metal; 1 bay; double sided; 10 fixed shelves with dividers; 2215H 900W 600D.	1	£503.81	£4,030.48
RAC500	1	RACK UNIT; metal; shelves with dividers, shelves to be height adjustable	3	Nil	Nil
RAC979	7	RACK; chrome / stainless steel, 5 wire shelves, mobile, 1739H 1524W, 610D	3	Nil	Nil
RAC980	22	RACK; pneumatic tube carrier holder; wall mounted; size TBC	1	£750.00	£16,500.00
RAD900	1	Radiometer.	3	Nil	Nil
RAI021	19	RAIL; coat hanging; 13 secure hangers with sleeve lock chain; (bridge unit top between lockers assembly); 900W 450D	3	Nil	Nil
RAI023	7	RAIL; coat hanging; 20 secure hangers with sleeve lock chain; (bridge unit top between lockers assembly); 1200W 450D	3	Nil	Nil
RAI046	1	RAIL, grab, vertical, wall mounted, 450mm	1	£22.52	£22.52
RAI048	1126	RAIL, grab, vertical, wall mounted, 600mm	1	£24.15	£27,192.90
RAI056	27	RAIL; towel; single; stainless steel; 15mm dia. 600mm.	1	£24.44	£659.88
RAI061	13	RAIL; towel; single stainless steel; 15mm dia. 450mm.	1	£28.57	£371.41
RAI062	2	RAIL; towel; triple swing arm; chromium plated; 12.5mm dia. 460mm.	1	£33.98	£67.96
RAI076	6	RAIL; grab; horizontal; wall mounted; 400mm.	1	£22.52	£135.12
RAI081	8	RAIL, grab, horizontal, wall mounted, 900mm	1	£25.77	£206.16
RAI091	2	RAIL; storage; walking aids; with subdivisions; wall mounted; 1800W 300D.	1	£138.80	£277.60
RAI092	3	RAIL; storage; walking aids; with subdivisions; wall mounted; 600W 300D.	1	£88.40	£265.20
RAI130	257	RAIL, clinical equipment, wall mounted, 600mm	1	£29.69	£7,630.33
RAI132	18	RAIL, clinical equipment, wall mounted, 1200mm	1	£36.25	£652.50
RAI136	36	RAIL; clinical equipment; wall mounted; 2100mm.	1	£24.15	£869.40
RAI161	416	RAIL, grab, horizontal, wall mounted, 600mm	1	£126.48	£52,615.68
RAI172	4	RAIL, grab, hinged, wall mounted, 650mm	1	£70.49	£281.96
RAI174	149	RAIL, grab, hinged, wall mounted, 650mm with toilet roll holder	1	£94.36	£14,059.64
RAI175	390	RAIL; grab; hinged; wall mounted; 750mm.	1	£94.36	£36,800.40
RAI2500	9	RAIL; clinical equipment; wall mounted; length as drawn.	1	£103.97	£935.73
RAI2501	5	RAIL; grab; anti-ligature; vertical; wall mounted; 600mm.	1	£71.74	£358.70
RAI2502	2	RAIL; grab; anti-ligature; horizontal; wall mounted; 600mm.	1	£71.74	£143.48
RAI2503	2	RAIL; grab; anti-ligature; hinged; wall mounted; 750mm.	1	£576.67	£1,153.34
RAI2504	12	RAIL; towel; anti-ligature; single stainless steel; 15mm dia. 450mm.	1	£129.38	£1,552.56
RAI266	12	RAIL for shower curtain; 1800mm.	1	£65.70	£788.40

Code	Quantity	Description	Group	Rate	Total
RAI900	44	Lower Medirail with mounts for suction pressure, suction control unused suction catheters.	1	£103.97	£4,574.68
RAI901	20	Monitor module rack pole mounted plus CO2/Press.	1	£1,500.00	£30,000.00
RAI903	24	Shelf and mount for monitor (tilt and swivel of screen required)	1	£389.48	£9,347.52
RAI904	28	Integral drip stand for transducers with hooks	1	£200.00	£5,600.00
RAI905	1	RAIL, clothes	1	£205.13	£205.13
RAN901	4	RA MACHINE; c/w patient circuit.	3	Nil	Nil
REC030	11	RECORDER/VIDEO; playback	3	Nil	Nil
REC032	3	RECORDER/DVD; playback	3	Nil	Nil
REC900	4	Recorder EMG (EP)	3	Nil	Nil
REC901	5	Recording System	3	Nil	Nil
REC902	5	Recorder Ambulatory	3	Nil	Nil
REC903	5	VTEM Recorder	3	Nil	Nil
REC905	15	Review Station	3	Nil	Nil
REC907	1	Magstim equipment	3	Nil	Nil
REC908	2	Spinal monitoring equipment	3	Nil	Nil
REC909	2	Visual Stimulator	3	Nil	Nil
REF032	3	FREEZER upright -20 deg.C; Panasonic MDF-U700VX-PE; 2010H 1010W 870D	3	Nil	Nil
REF042	2	REFRIGERATED DEEP FREEZE CABINET, capacity 243 litres, internal temperature gauge, 1450H 700W 700D	3	Nil	Nil
REF053	6	REFRIGERATOR; laboratory; capacity 160 litres; external temperature gauge; automatic defrost; lockable; underbench; 850H 550W 620D	3	Nil	Nil
REF058	3	REFRIGERATOR, capacity 160 litre, automatic defrost, stainless steel, underbench, external temperature gauge, lockable, on castors, 850H 610W 600D	3	Nil	Nil
REF059	1	REFRIGERATED DEEP FREEZE CABINET, capacity 243 litres, internal temperature gauge, 1450H 600W 600D	3	Nil	Nil
REF062	10	REFRIGERATOR, capacity 82 litres, external temperature gauge, lockable, 660H 500W 510D	3	Nil	Nil
REF063	10	REFRIGERATOR, capacity 117 litres, domestic type, 865H 500W 550D	3	Nil	Nil
REF065	13	REFRIGERATOR, capacity 285 litres, 1430H 600W 635D	3	Nil	Nil
REF066	10	REFRIGERATOR, capacity 390 litres, 1855H 645W 595D	3	Nil	Nil
REF067	4	REFRIGERATOR, capacity 385 litre, automatic defrost, stainless steel, external temperature gauge, lockable, on castors, 1995H 600W 700D	3	Nil	Nil
REF091	19	REFRIGERATOR; drug; capacity 35 litres; external temperature gauge; lockable; wall mounted; 510H 380W 445D	2A	£50.00	£950.00
REF105	2	ICE MACHINE: under bench, plumbed in	2A	£15.38	£30.76
REF107	1	REFRIGERATOR MACHINE, ice production 23 kg ice/24hours, 650H 475W 450D	2A	£15.38	£15.38
REF120	5	REFRIGERATOR, capacity 160 litre refrigerator, 1650H 550W 610D	3	Nil	Nil
REF200	1	REFRIGERATOR: upright	3	Nil	Nil

Code	Quantity	Description	Group	Rate	Total
REF2500	1	FREEZER; capacity 82 litres; 660H 500W 510D	3	Nil	Nil
REF2501	1	Blast chiller	3	Nil	Nil
REF2503	3	REFRIGERATOR special feeds; 650H 475W 450D	3	Nil	Nil
REF900	1	Ultra-Slender 360 L / 12.7 cft Freezer	3	Nil	Nil
REF901	8	REFRIGERATOR 600 x 600 x 850.	3	Nil	Nil
REF902	2	REFRIGERATOR 550 x 600 x 850.	3	Nil	Nil
REF903	1	FREEZER 600 X 600 X 1430.	3	Nil	Nil
REF904	4	FREEZER 600 X 600 X 850.	3	Nil	Nil
REF910	1	FREEZER -70 degrees 1670 X 860 X 1100.	3	Nil	Nil
REF912	1	FREEZER 800W 1050D 1500H	3	Nil	Nil
REF913	2	REFERIGERATOR, undercounter, 66L, glass fronted, chemotherapy use, 720H 450W 485D	3	Nil	Nil
REF914	9	REFRIGERATOR, bench mounted, 36L, glass fronted, intrathecal use, 535H 450W 485D	3	Nil	Nil
REF915	4	REFRIGERATOR, undercounter, 150L, glass fronted, drug use, 820H 600W 610D	3	Nil	Nil
REF916	2	REFRIGERATOR; 1350 litre upright cabinet, 1440W 820D 2080H	3	Nil	Nil
REF920	2	REFRIGERATOR, with freezer, capacity 117 litres, domestic type, 865H 500W 550D	3	Nil	Nil
RES003	3	REST FOOT; height adjustable; washable cover	3	Nil	Nil
RES004	3	REST ARM; height adjustable; mobile; washable cover	3	Nil	Nil
RES030	1	RESIDUAL CURRENT DEVICE (RDS); 30amp; S.P.& N; wall mounted.	1	£75.00	£75.00
RIN005	1	RING; basket ball; includes: ring; fixing; basket ball and net; 500mm dia.	2A	£30.00	£30.00
RSU010	20	DEFIBRILLATOR; Manual	3	Nil	Nil
RSU011	10	DEFIBRILLATOR; Manual with pacing capability	3	Nil	Nil
RSU012	5	DEFIBRILLATOR; Automated External	3	Nil	Nil
RTM010	1	REAL TIME MACHINE	3	Nil	Nil
SAF001	6	SAFE; small; floor standing; 680H 500W 500D.	3	Nil	Nil
SAF003	2	SAFE; radioisotopes; lead lined; 240H 200W 120D	3	Nil	Nil
SAF005	2	SAFE; wall; recessed; 150H 200W 150D.	1	£300.00	£600.00
SAF900	29	SAFE; wardrobe mounted; 250H 350W 280D	2A	£46.15	£1,338.35
SAF901	3	SAFE; small; floor standing; 250H 350W 250D	3	Nil	Nil
SAF903	1	SAFE; floor standing; 640H 550W 480D	3	Nil	Nil
SAN900	1	SANDBLASTER, small 1 grit model (50 micron)	3	Nil	Nil
SAW2500	4	SAW; plaster	3	Nil	Nil
SCA011	12	SCALE; baby	3	Nil	Nil
SCA012	10	SCALE; swab; includes Mains adaptor	3	Nil	Nil
SCA081	10	SCALE column; weighing person; electronic; and telescopic column for height measure	3	Nil	Nil
SCA083	3	SCALE CHAIR; weighing person; mobile	3	Nil	Nil

Code	Quantity	Description	Group	Rate	Total
SCA085	10	SCALE WHEELCHAIR; weighing person; electronic; flat platform and ramp; capacity 300 kg	3	Nil	Nil
SCA2500	8	SCALE COLUMN; weighing person; electric; and telescopic column for height measure; wall mounted.	3	Nil	Nil
SCA2501	9	SCALE; free standing height column	3	Nil	Nil
SCA2503	5	SCALPEL; harmonic	3	Nil	Nil
SCA3501	3	SCALE, height, wall mounted	3	Nil	Nil
SCA900	2	SCALE: Weighting High Precision	3	Nil	Nil
SCP900	22	STETHOSCOPE	3	Nil	Nil
SCR012	2	SCREEN; dividing; woodgrain melamine w PVC edge; portable; 1525H 1200W	3	Nil	Nil
SCR019	195	SCREEN, dividing, 1500H 1500W	3	Nil	Nil
SCR043	4	SCREEN; projection; ceiling mounted; 1800H 1800W.	1	£158.80	£635.20
SCR044	3	SCREEN; projector; ceiling mounted; 1800H 2400W.	1	£214.19	£642.57
SCR060	1	SCREEN shielding; radiation proof; 1mm lead; solid/glass; 2000H 2100L; angle	2B	Nil	Nil
SCR061	3	SCREEN shielding; radiation proof; 2mm lead; solid/glass; 2000H 2100L; angle	2B	Nil	Nil
SCR066	7	SCREEN shielding; radiation protection; lead sheets; mobile; 1140H 1070L; lead equivalent 0.8 mm Pb @ 110 keV.	2B	Nil	Nil
SCR1000	1	SCREEN shielding; radiation proof; 2mm lead; solid/glass; 2000H length to suit	2B	Nil	Nil
SCR1001	1	SCREEN; Shower with door 1000 high with door.	1	£1,000.00	£1,000.00
SCR1002	1	SCREEN; Shower screen; length as drawn; 1000 high.	1	£1,500.00	£1,500.00
SCR2501	2	SCREEN; Mobile	3	Nil	Nil
SCR2502	2	SCREEN; Perspex; length as drawn.	1	£200.00	£400.00
SCR2503	5	SCREEN, mobile 2500L 480W 1700H	3	Nil	Nil
SCR2504	6	SCREEN, acoustic, floor standing 800L 1500H	3	Nil	Nil
SCR901	1	SCREEN; Mobile 3 fold (1400H X 630 X 470)	3	Nil	Nil
SEA001	163	2in1 toilet seat, plastic, double lid with large and small aperture suitable respectively for adults/ adolescents and small children.	1	£250.00	£40,750.00
SEA006	30	SEAT; bench; with shoe rack; 450H 1200W 450D	3	Nil	Nil
SEA024	4	SEAT, tip-up, wall mounted, 400 W 400D	1	£65.70	£262.80
SEA2500	16	SEATING; as per detailed design.	1	£1,000.00	£16,000.00
SEA900	1	SEATING; as per detailed design, including built in shelving, music system, wii system, laptop on trolley, table & chairs, tv/dvd recorder all anti ligature	3	Nil	Nil
SEA902	15	SEATING; Restaurant - table, round, 900 diameter, nominal with 4 chairs	2B	Nil	Nil
SEA903	6	SEATING; Restaurant - table, rectangular, 1750L 750D, nominal with 6 chairs	2B	Nil	Nil
SEA904	2	SEATING; Restaurant - table, rectangular, 600L 750D, nominal with 2 chairs	2B	Nil	Nil
SET001	1	SETTEE/BED; convertible; with arms	3	Nil	Nil
SEW001	1	SEWING MACHINE; electric	3	Nil	Nil
SHE063	1	SHELF; adjustable; P.V.C. coated steel;	1	£561.25	£561.25

Code	Quantity	Description	Group	Rate	Total
		perforated; wall mounted; 1500W 600D			
SHE100	141	SHELF; 200mm deep; length as drawn.	1	£18.28	£2,577.48
SHE1000	2	SHELF; 150mm deep; length as drawn.	1	£26.13	£52.26
SHE1002	294	SHELF; 300mm deep; length as drawn.	1	£23.83	£7,006.02
SHE1003	104	SHELF; 400mm deep; length as drawn.	1	£26.64	£2,770.56
SHE1004	4	SHELF; 600mm deep Modular unit as drawn.	1	£75.00	£300.00
SHE1009	44	SHELF; 500mm deep; length as drawn.	1	£33.51	£1,474.44
SHE1010	30	SHELF; metal; adjustable; 500mm deep; length as drawn.	1	£31.82	£954.60
SHE1011	12	SHELF; metal; adjustable; 770mm deep; length as drawn.	1	£35.92	£431.04
SHE1065	12	SHELF, plinth 1200W 500D 200H	1	£103.21	£1,238.52
SHE1068	1	SHELF, plinth 1800W 500D 200H	1	£114.40	£114.40
SHE1100	26	SHELF, raised edge, non-breakable, 600W 200D	1	£70.00	£1,820.00
SHE1101	1	SHELF, rolling storage system	2A	£5,000.00	£5,000.00
SHE127	15	SHELF BOOK UNIT; 5 shelves; single sided; open; freestanding; 2000H 800W 250D	2A	£46.15	£692.25
SHE2010	8	SHELF; metal; adjustable; 550mm deep; length as drawn.	1	£424.11	£3,392.88
SHE2500	16	PIGEON HOLE UNITS; 4 Levels; single sided; open; fixed to wall. 1000H 800W 300D	1	£146.53	£2,344.48
SHE2502	23	SHELF; 600mm deep; length as drawn	1	£49.78	£1,144.94
SHE2503	149	SHELF; 300mm deep; folding; length as drawn.	1	£79.81	£11,891.69
SHE900	40	Shelf for airway consumables	1	£26.64	£1,065.60
SHE901	23	Lower height adjustable shelf for small monitors.	1	£89.52	£2,058.96
SHE902	6	SHELF, with supports from island units, 2no each side	1	£288.46	£1,730.76
SHE903	4	SHELF, 2no, with supports	1	£62.48	£249.92
SHI001	2	SHIELD; radioisotope; lead brick 25mm lead thickness; 600H 600W 600D	3	Nil	Nil
SHO002	203	SHOWER; slip resistant floor with drainage outlet; 900W 900D	1	£79.57	£16,152.71
SHO003	4	SHOWER TRAY; slip resistant base; with drainage outlet; 1000W 1000D	1	£79.57	£318.28
SHO018	210	SHOWER, valve, thermostatic mixer (associated with SHO020)	1	£199.92	£41,983.20
SHO020	211	SHOWER, adjustable shower head hand spray (associated with SHO018)	1	£107.09	£22,595.99
SHO1000	13	SHOWER; anti-ligature; sensor operated with time regulated water flow.	1	£1,060.00	£13,780.00
SHO1001	7	SHOWER; pre-plumbed unit; wall mounted.	1	£500.00	£3,500.00
SHO1002	4	SHOWER; cubicle; to fit 'SHO003	1	£1,200.00	£4,800.00
SHO1003	1	SHOWER; emergency drench, complete with services	1	£5,000.00	£5,000.00
SHO900	2	Shopfitting; Turnkey package	2B	Nil	Nil
SHO901	2	Shopfitting; NHSL,Café Aroma fit out	2B	Nil	Nil
SHO902	1	Shopfitting; NHSL,Café Aroma fit out	2B	Nil	Nil
SHOW1002	24	SHOWER; IPS/wall mounted; on adjustable rail	1	£600.00	£14,400.00
SHR001	1	SHREDDER; paper	3	Nil	Nil
SIG2500	124	SIGN; vacant/engaged; wall mounted.	1	£31.00	£3,844.00
SIG2501	53	Sign; door slot Drs name	1	£3.96	£209.88

Code	Quantity	Description	Group	Rate	Total
SIG900	8	SIGN; door; vacant/engaged & names slot	1	£31.00	£248.00
SIN013	3	SINK and BASIN combination Janitorial unit, hinged bucket grating to sink and monobloc mixer tap with swivel nozzle, stainless steel, 900H 500W 600D	1	£950.00	£2,850.00
SIN093	7	SINK; Belfast style; stainless steel; 38mm waste; combined outlet and overflow; 205H 455W 380D	1	£483.39	£3,383.73
SIN105	1	SINK UNIT; 1 bowl and drainer; stainless steel; variable height; motorised system; 650/910H 1200W 580D	1	£428.35	£428.35
SLE901	9	HOME VENTILATION; Cpap – S9 Escape	3	Nil	Nil
SLE902	2	HOME VENTILATION; Cpap – Sulivan VpapIII	3	Nil	Nil
SLE903	7	HOME VENTILATION; Cpap – Humidaire 2i	3	Nil	Nil
SLE904	2	HOME VENTILATION; Resmed VS 111	3	Nil	Nil
SLE905	1	HOME VENTILATION; Elisee 150	3	Nil	Nil
SLE906	1	HOME VENTILATION; Legendair	3	Nil	Nil
SLE907	1	HOME VENTILATION; Cpap S8 Escape	3	Nil	Nil
SLE908	2	HOME VENTILATION; Humidifier HC 150	3	Nil	Nil
SLE909	4	HOME VENTILATION; Humidifier MR 850	3	Nil	Nil
SLI2500	38	PATSLIDE	3	Nil	Nil
SMC121	1	CATHETER CUPBOARD, 600mm facing, with formed plastic liners, incl. shelf with 5 telescopic rails, 1 door, on plinth, o/a height 2100	3	Nil	Nil
SNO900	1	Snoezelen equipment	2B	Nil	Nil
SNS1002R	16	SINKTOP; inset; bowl and a half; stainless steel; right hand drainer.	1	£428.35	£6,853.60
SNS1003L	34	SINKTOP; inset; single bowl and drainer; stainless steel; left hand drainer.	1	£428.35	£14,563.90
SNS1003R	42	SINKTOP; inset; single bowl and drainer; stainless steel; right hand drainer.	1	£428.35	£17,990.70
SNS1005L	1	SINKTOP; inset; double bowl and single drainer; stainless steel; left hand drainer.	1	£428.35	£428.35
SNS510	4	SINK plaster; plain top; no tap holes; no upstand; no overflow; left hand drainer; stainless steel; 900H 1200W 600D; HTM64PSH	1	£428.35	£1,713.40
SNS516	1	SINK; plaster; plain top; no tap holes; no upstand; no overflow; right hand drainer; stainless steel; 1200W 600D. HTM64PSH	1	£428.35	£428.35
SNS700	3	SINK; single bowl; 2 tap holes; no overflow; stainless steel; 600W 600D; HTM64SK1	1	£344.59	£1,033.77
SNS752	4	SINKTOP; single bowl; no tap holes; no overflow; left hand integral ribbed drainer; stainless steel; 1200W 600D.	1	£344.59	£1,378.36
SNS753	8	SINKTOP; single bowl; no tap holes; no overflow; right hand integral ribbed drainer; stainless steel; 1200W 600D. HTM64STA	1	£344.59	£2,756.72
SOM2500	6	SOMNOSCREEN; sleep study system	2B	Nil	Nil
SOM900	2	SOMNOSCREEN; System	3	Nil	Nil
SPA2505	1	Fittings with basin and storage to artist design. To include tall shelved cupboard	1	£2,500.00	£2,500.00

Code	Quantity	Description	Group	Rate	Total
		for linen storage.			
SPE2500	4	SPEAKERS; high specification	1	£150.00	£600.00
SPH003	36	SPHYGMOMANOMETER; rail mounted	3	Nil	Nil
SPH900	2	STAND; sphygmomanometer	3	Nil	Nil
SPI300	4	SPILL KIT	3	Nil	Nil
SPI301	2	RADIATION SPILL KIT	3	Nil	Nil
SPI900	2	TABLE; spinal	3	Nil	Nil
SPL2500	1	SPLINT BATH; 750W 660D	3	Nil	Nil
SPR007	1	SPRAY UNIT; wall mounted; hand; dispenser; flexible; hose	1	£269.21	£269.21
SPR2500	2	Shower; hand spray; long hose; with 2 wall brackets.	1	£250.00	£500.00
STA101	20	STAND; lotion bowl; single; stainless steel; (Bowls not included)	3	Nil	Nil
STA102	6	STAND; 2 lotion bowls; stainless steel	3	Nil	Nil
STA120	1	STAND; hat; coat; umbrella; 12 hangers; 1675H 900W400D	3	Nil	Nil
STA142	236	STAND; infusion; twin hook; breaks; mobile	3	Nil	Nil
STA185	1	STAND; projector overhead; mobile; 865H 1140W 520D	3	Nil	Nil
STA2501	2	STAND; infusion; twin hook; breaks; mobile; weighted	3	Nil	Nil
STA2502	2	STAND; scoliosis cassettes	3	Nil	Nil
STA2503	4	STAND; BP Vital Signs	3	Nil	Nil
STA2504	82	STAND; Roll stand for monitor	3	Nil	Nil
STA2505	1	STAND; Roll stand for docking station	3	Nil	Nil
STA2506	3	STAND; Optiflow	3	Nil	Nil
STA2507	1	STAND; Cortrak	3	Nil	Nil
STA2508	9	STAND; drip, rail mounted	3	Nil	Nil
STA2509	46	STAND; sharps bin, mobile, 30 litre	3	Nil	Nil
STA2510	2	STAND; drip, twin hooks, MR compatible	3	Nil	Nil
STE2500	1	STEPS; stepped platform	3	Nil	Nil
STF111	1	STORAGE UNIT; lower; cupboard; 1 door; 1 shelf; lockable; 550H 500W 300D	1	£89.71	£89.71
STF120	6	STORAGE UNIT; lower; cupboard; 1 door; 1 shelf; on castors; 600H 500W 450D	3	Nil	Nil
STF125	10	STORAGE UNIT; lower; cupboard; 1 door; 1 shelf; 550H 500W 450D	1	£97.96	£979.60
STF127	1	STORAGE UNIT; lower; cupboard; 2 door; 1 shelf; 550H 600W 450D	1	£104.98	£104.98
STF129	3	STORAGE UNIT; lower; cupboard; 2 door; 2 shelves; 550H 600W 450D	1	£108.98	£326.94
STF130	1	STORAGE UNIT; lower; cupboard; 2 door; 1 shelf; on castors; 600H 600W 550D	3	Nil	Nil
STF135	14	STORAGE UNIT; lower; cupboard; 2 door; 1 shelf; lockable; 750H 1000W 450D	1	£154.34	£2,160.76
STF136	5	STORAGE UNIT; lower; cupboard; 2 door; 1 shelf; lockable; 550H 1000W 450D	1	£154.34	£771.70
STF151	50	STORAGE UNIT; lower; 2 drawer; on castors; 600H 500W 450D	3	Nil	Nil
STF154	4	STORAGE UNIT; lower; 3 drawer; lockable; on castors; 600H 600W 450D	3	Nil	Nil
STF158	3	STORAGE UNIT; lower; 3 drawer; 550H	1	£147.77	£443.31

Code	Quantity	Description	Group	Rate	Total
		600W 450D			
STF161	1	STORAGE UNIT; lower; 4 drawer; 550H 500W 450D	1	£164.98	£164.98
STF165	1	STORAGE UNIT; lower; 6 drawer; on castors; 600H 600W 450D	3	Nil	Nil
STF200	200	STORAGE UNIT; mid; shelf; 150H 300W 150D	1	£27.67	£5,534.00
STF205	13	STORAGE UNIT; mid; writing shelf; hinged; 200H 600W 400D	1	£45.21	£587.73
STF206	1	STORAGE UNIT; mid; writing shelf; fixed; 200H 600W 400D	1	£39.14	£39.14
STF231	12	STORAGE UNIT; tall; cupboard; 2 door; adjustable shelves; lockable; 1600H 600W 300D	1	£217.62	£2,611.44
STF233	2	STORAGE UNIT; tall; cupboard; 2 door; adjustable shelves; lockable; 1600H 600W 600D	1	£224.34	£448.68
STF2330	5	STORAGE UNIT; tall; cupboard; 2 door; adjustable shelves; lockable; 1600H 800W 600D	1	£273.38	£1,366.90
STF238	2	STORAGE UNIT; tall; open shelf carcase; adjustable shelves and pack dispenser; 1600H 600W 300D	1	£140.54	£281.08
STF2500	10	STORAGE UNIT; tall; cupboard; 2 door; adjustable shelves; lockable; 1800H 600W 300D	2A	£46.15	£461.50
STF2501	2	STORAGE UNIT; underbench; stationary filing; 750H 500W 500D; HTM67.	1	£145.34	£290.68
STF2505	5	STORAGE UNIT; upper cupboard; drugs; 1 door; lockable; 550h 600w 300d	1	£82.67	£413.35
STF2506	1	STORAGE UNIT; lower; cupboard; 2 door; 1 shelf; lockable; on plinth	1	£140.62	£140.62
STF2572	1	CUPBOARD; domestic base unit; 2 door; with sink cut out adjustable shelf	1	£166.18	£166.18
STF270	2	STORAGE UNIT; upper; cupboard; 1 door; 1 shelf; 550H 500W 300D	1	£77.92	£155.84
STF271	1	STORAGE UNIT; upper; cupboard; 1 door; 1 shelf; lockable; 550H 500W 300D	1	£77.92	£77.92
STF274	63	STORAGE UNIT; upper; cupboard; 2 door; 1 shelf; 550H 600W 300D	1	£82.67	£5,208.21
STF275	18	STORAGE UNIT; upper; cupboard; 2 door; 1 shelf; lockable; 550H 600W 300D	1	£82.67	£1,488.06
STF280	4	STORAGE UNIT; upper; cupboard; 2 door; 1 shelf; 550H 1000W 300D	1	£121.03	£484.12
STF281	11	STORAGE UNIT; upper; cupboard; 2 door; 1 shelf; lockable; 550H 1000W 300D	1	£121.03	£1,331.33
STF286	7	STORAGE UNIT; upper; cupboard; medicine; 2 door; lockable; 550H 600W 300D	1	£117.80	£824.60
STF290	38	STORAGE UNIT; upper; cupboard; controlled drugs; 1 door; lockable; with inner lockable cupboard and warning light; 550H 600W 300D	1	£759.85	£28,874.30
STF300	3	STORAGE UNIT; upper cupboard; 2 door; 1 shelf; 550H 1000W 450D	1	£152.40	£457.20
STF400	1	CABINET: Under bench cabinet with 1 drawer at top and cabinet with shelf beneath; on castors	3	Nil	Nil
STF900	26	Vanity desk with 2 integrated drawers	3	Nil	Nil
STO002	13	STOOL, height adjustable, 380H 480 dia.	3	Nil	Nil
STO003	2	STOOL; height adjustable; on slides; 600-750H 320 dia.	3	Nil	Nil

Code	Quantity	Description	Group	Rate	Total
STO004	28	STOOL, height adjustable, swivel, mobile	3	Nil	Nil
STO006	39	STOOL, surgeon/anaesthetist, height adjustable, includes anti-static seat pads	3	Nil	Nil
STO007	1	STOOL, metal frame, upholstered, 710 height	3	Nil	Nil
STO013	14	STOOL; swivel; with back; 710 height	3	Nil	Nil
STO015	3	STOOL, wooden, 400H 400W 400D	3	Nil	Nil
STO020	43	STOOL; anatomic; backrest; armrests; height adjustable	3	Nil	Nil
STO023	35	STOOL; laboratory; complete with footring	3	Nil	Nil
STO024	16	STOOL, dental, with back support, mobile	3	Nil	Nil
STO2500	1	STOOL; laboratory; complete with foot ring; no fabric; on castors	3	Nil	Nil
STO2501	2	STOOL; height adjustable; on castors; 450H 355 dia.	3	Nil	Nil
STO2502	3	INJECTION STOOL: MR compatible	3	Nil	Nil
STO900	2	STOOL; MR Compatible	3	Nil	Nil
SUC002	20	SUCTION UNIT; pipeline; high pressure; theatre	3	Nil	Nil
SUC004	52	SUCTION UNIT; electric; portable; 350H 320W 340D	3	Nil	Nil
SUC902	1	SUCTION UNIT; pipeline; high pressure; theatre; MRI compatible	3	Nil	Nil
SUP2500	215	SUPPORT LEG; for 920 high worktop	1	£32.65	£7,019.75
SUP2501	535	SUPPORT LEG; for 720 high worktop	1	£32.65	£17,467.75
SUP2502	5	SUPPORT; over bed monkey bar.	3	Nil	Nil
SUR1000	1	DOPPLER IMAGER; Laser	3	Nil	Nil
SUR1001	2	MACHINE; Nitric Oxide	3	Nil	Nil
SUR2001	3	Braun Tourniquets	3	Nil	Nil
SUR2002	3	Flowtron Machine	3	Nil	Nil
SUR2003	1	Cusa Ultrasonic Suction	3	Nil	Nil
SUR2004	1	Cusa Ultrasonic Suction	3	Nil	Nil
SUR2005	1	ELECROSURGERY UNIT,	3	Nil	Nil
SUR2006	1	PIEZO SCALER, complete with spare tips and handpiece	3	Nil	Nil
SUR900	2	Theatre trays for additional theatres	3	Nil	Nil
SUR901	1	Brain Lab (DCN)	3	Nil	Nil
SUR902	2	STEALTH MONITOR	3	Nil	Nil
SUR903	1	Scopes	3	Nil	Nil
SUR904	4	Microscope (ENT) Outpatients	3	Nil	Nil
SUR905	2	MICROSCOPE (DCN)	3	Nil	Nil
SUR906	1	MICROSCOPE(OPMI PENTERO) (neurology)	3	Nil	Nil
SUR907	2	LAPAROSCOPIC STACKS	3	Nil	Nil
SUR908	2	MICROSCOPE	3	Nil	Nil
SUR909	2	OR1 NEO Animation system, laparoscopic	2B	Nil	Nil
SUR910	1	MICROSCOPE & MONITOR (OPMI) (ent)	3	Nil	Nil
SUR911	1	MICROSCOPE & TV SCREEN(ZEISS) (plastics)	3	Nil	Nil
SUR912	2	SONA SITE	3	Nil	Nil
SUR913	1	ENT STACK (STORZ)	3	Nil	Nil
SUR914	1	DORC-CRYOSTAR (opthalmics)	3	Nil	Nil
SUR915	2	MEDTRONIC DRILL	3	Nil	Nil

Code	Quantity	Description	Group	Rate	Total
SUR916	1	ARTHROSCOPY STACK. SMITH & NEPHEW	3	Nil	Nil
SUR917	2	INTUBATING TROLLEY STACK (anaes)	3	Nil	Nil
SUR918	1	Scopes Stack	3	Nil	Nil
SUR919	2	HEADLIGHT (ENT)	3	Nil	Nil
SUR920	2	HEADLIGHT (ophthalmic)	3	Nil	Nil
SUR921	2	FACIAL NERVE MONITOR	3	Nil	Nil
SUR922	1	CARDIAC OUTPUT MONITOR LIDCO PLUS	3	Nil	Nil
SUR923	20	Laparoscopes, endoscopes etc	3	Nil	Nil
SUR924	3	ANAESTHETIC MACHINE (SPARE)	3	Nil	Nil
SUR925	2	Difficult Incubation Trolley	3	Nil	Nil
SUR926	1	S.U.F.E TABLE & ATTACHMENTS	3	Nil	Nil
SUR927	1	HEADLIGHT (neurology)	3	Nil	Nil
SUR928	2	New Headlight	3	Nil	Nil
SUR929	2	KAVO DENTAL DRILL (dental)	3	Nil	Nil
SUR930	4	AUSCULAP ELECTRIC DRILL	3	Nil	Nil
SUR931	1	OCCUSAN	3	Nil	Nil
SUR932	1	RETINOMAX	3	Nil	Nil
SUR933	2	Diathermy Machine (Spare)	3	Nil	Nil
SUR934	4	MAYFIELD PIN HEAD REST	3	Nil	Nil
SUR935	1	XOMED SUCTION	3	Nil	Nil
SUR936	4	HIP SPICA FRAME 2400x 800mm	3	Nil	Nil
SUR938	3	PLASTER TROLLEY AND 2 PLASTER SAWS	3	Nil	Nil
SUR941	9	Bearhugger	3	Nil	Nil
SUR942	2	Coblation Trolley	3	Nil	Nil
SUR943	2	COBLATOR	3	Nil	Nil
SUR944	1	Coflex Trolley	3	Nil	Nil
SUR945	3	CRW Trolley	3	Nil	Nil
SUR946	3	CUSA ULTRA SONIC SUCTION	3	Nil	Nil
SUR947	2	DENTAL CART	3	Nil	Nil
SUR949	1	DORC VITRECTOMY MACHINE	3	Nil	Nil
SUR950	1	DORC-HEXON	3	Nil	Nil
SUR951	1	DYONICS LIGHT BOX	3	Nil	Nil
SUR952	1	ELECTRIC STRYKER DRILL	3	Nil	Nil
SUR953	2	Flowtron boots	3	Nil	Nil
SUR954	1	GYRUS PLASMAKINETIC	3	Nil	Nil
SUR956	11	KAVO SURGICAL DRILL-HAND PIECES	3	Nil	Nil
SUR957	1	LIGASURE	3	Nil	Nil
SUR958	1	Malis Bipolar System	3	Nil	Nil
SUR959	1	NIM Eclipse Neuromonitoring equipment	3	Nil	Nil
SUR960	1	Midas Rex Trolley	3	Nil	Nil
SUR962	1	New Microscope Monitor Stack	3	Nil	Nil
SUR965	1	OPHTHALMOSCOPE	3	Nil	Nil
SUR966	1	PAIN Clinic Trolley	3	Nil	Nil
SUR967	1	PLASTER JACKET FRAME	3	Nil	Nil
SUR970	1	SPINAL MONITORS WITH GRATNELL TROLLEY 500x500x870mm EACH	3	Nil	Nil
SUR971	9	Swab bucket	3	Nil	Nil
SUR972	1	Synthes Trolley	3	Nil	Nil
SUR973	1	Table attachment & Clamp Trolley	3	Nil	Nil
SUR978	1	Tisseal Trolley	3	Nil	Nil

Code	Quantity	Description	Group	Rate	Total
SUR980	4	Tray Trolleys tall	3	Nil	Nil
SUR981	1	VERSA JET	3	Nil	Nil
SUR982	2	VITECTOMY SYSTEM	3	Nil	Nil
SUR983	1	Yasergill Clips Trolley	3	Nil	Nil
SUR984	2	ZIMMER ELECTRIC DERMATOME, incl blades	3	Nil	Nil
SUR985	20	Humidifier: 1 plug, 1 Data (Lantronix) cable	3	Nil	Nil
SUR986	20	Docking station with 7 volumetric pumps: 1 plug, I Data (Lantronix) cable	3	Nil	Nil
SUR987	20	Nebuliser mounted on Medirail : 1 plug	3	Nil	Nil
SUR989	148	Alaris volumetric pumps: 2 plugs	3	Nil	Nil
SUR990	8	Alaris volumetric pumps: 2 plugs	3	Nil	Nil
SUR991	41	Double oxygen flow meter: Upper Medirail mounted	3	Nil	Nil
SUR992	38	Air flow meter: Upper Medirail mounted	3	Nil	Nil
SUR993	24	Airway pressure monitor: Upper Medirail mounted	3	Nil	Nil
SUR994	2	Haemofiltration machine	3	Nil	Nil
SUR997	1	Nasometer	3	Nil	Nil
SUR999	64	Enteral feed pump	3	Nil	Nil
SWC025	1395	SWITCH, light	1	£30.18	£42,101.10
SWC031	247	SWITCH; light; dimmer to M&E design.	1	£40.18	£9,924.46
SWC033	10	SWITCH dimmer; 3 position; wall mounted	1	£142.95	£1,429.50
SWC034	34	SWITCH, dimmer, modulating	1	£121.09	£4,117.06
SWC035	19	SWITCH; dimmer trunking mounted.	1	£121.09	£2,300.71
SWC062	31	EMERGENCY STOP switch button, wall mounted	1	£45.40	£1,407.40
SWC082	2	EMERGENCY STOP; switch button; wall mounted	1	£45.40	£90.80
SYN001	2	SYNOPTOPHORE; includes set of 12 pairs of slides; with accessories set; orthoptics	3	Nil	Nil
SYR001	2	SYRINGE INJECTOR, automatic, high pressure injection, contrast media.	2B	Nil	Nil
SYR004	94	SYRINGE pump; anaesthetic use; with diprifusor; 115H 400W 180D	3	Nil	Nil
SYR005	4	SYRINGE INJECTOR; MRI compatible; automatic; hi pressure injection; media contrast	2B	Nil	Nil
SYR2502	2	SYRINGE INJECTOR; automatic; hi pressure injection; contrast media; ceiling mounted	2B	Nil	Nil
SYR900	10	PCA SYRINGE DRIVER; Graseby 3300	3	Nil	Nil
SYR901	67	SYRINGE DRIVER; Alaris GH	3	Nil	Nil
TAB001	1	TABLE; 600H 450W 450D	3	Nil	Nil
TAB002	13	TABLE; 650H 1200W 600D	3	Nil	Nil
TAB003	23	TABLE, 710H 600W 450D	3	Nil	Nil
TAB004	10	TABLE; 710H 840W 530D	3	Nil	Nil
TAB007	14	TABLE, 710H 900W 900D	3	Nil	Nil
TAB008	12	TABLE, 710H 1200W 600D	3	Nil	Nil
TAB011	11	TABLE; 725H 1220W 750D	3	Nil	Nil
TAB012	2	TABLE; 710H 1200W 900D	3	Nil	Nil
TAB014	4	TABLE, 710H 1800W 900D	3	Nil	Nil
TAB022	1	TABLE; foldaway; wall mounted; 1000H 850W 600D	1	£60.00	£60.00

Code	Quantity	Description	Group	Rate	Total
TAB028	22	TABLE, circular, 710H 900mm dia.	3	Nil	Nil
TAB030	1	TABLE; circular; 760H 1100mm dia.	3	Nil	Nil
TAB035	5	TABLE, bedside, 540H 450W 450D	3	Nil	Nil
TAB053	20	TABLE, occasional, square, 415H 610W 610D	3	Nil	Nil
TAB054	5	TABLE, occasional, undershelf, 450H 610W 610D	3	Nil	Nil
TAB055	1	TABLE; occasional; undershelf; 530H 960W 450D	3	Nil	Nil
TAB056	134	TABLE; occasional; round; 415H 610mm dia.	3	Nil	Nil
TAB057	3	TABLE; trapezoidal; 710H 1200W 600D	3	Nil	Nil
TAB060	11	TABLE, child, 470H 1200W 700D	3	Nil	Nil
TAB068	1	TABLE, therapy treatment, tilt 90 degree, variable height 460/760, locking castors, electric motor, hand switch, 760H 1900W 610D	3	Nil	Nil
TAB071	12	TABLE operating patient, powered with 250mm transverse top, complete with specialty accessories, 715H 600W 2102D	3	Nil	Nil
TAB073	212	TABLE, overbed, cantilevered	3	Nil	Nil
TAB098	6	TABLE/TROLLEY changing, variable height, with sides and paper roll holder, on castors, 500-920H 1820W 700D	3	Nil	Nil
TAB107	6	TABLE, canteen/kitchen, 710H 900W 750D	3	Nil	Nil
TAB109	5	TABLE; occasional; square	3	Nil	Nil
TAB122	40	Table; committee; unit type; 720H 1400W 700D	3	Nil	Nil
TAB123	17	Table; committee; unit type; corner quadrant; 720H 700W 700D	3	Nil	Nil
TAB179	7	TABLE, 720H 900W 600D	3	Nil	Nil
TAB2199	1	TABLE; spinal, 1920H 22800W 730D	3	Nil	Nil
TAB2500	4	TABLE; trapezoidal; Childs;600H 1200W 600D	3	Nil	Nil
TAB2502	7	TABLE; 1200W 600D adjustable height	3	Nil	Nil
TAB2503	1	TABLE; Tennis table; as drawn	3	Nil	Nil
TAB2504	1	TABLE; pool as drawn	3	Nil	Nil
TAB2506	11	TABLE; for child; adjustable height; 900W 600D	3	Nil	Nil
TAB2508	9	TABLE; square; 1000W 1000D 760H	3	Nil	Nil
TAB2520	2	TABLE; Footbal	3	Nil	Nil
TAB2521	1	TABLE; Air Hockey	3	Nil	Nil
TAB2522	2	TABLE; 720H 1200W 600D	3	Nil	Nil
TAB903	1	TABLE operating patient; MR Compatible Top powered with 250mm transverse top; complete with specialty accessories; 715H 600W 2102D	3	Nil	Nil
TAP022	2	TAP, laboratory, cold water	1	£96.08	£192.16
TAP023	2	TAP, laboratory, hot water	1	£96.08	£192.16
TAP1000	10	TAP; hospital pattern; bib; integral thermostatic mixer; single lever with fixed horizontal nozzle. HTM64 TBH2a.	1	£273.98	£2,739.80
TAP1001	25	TAP; domestic style thermostatic mixer; bath mounted.	1	£189.24	£4,731.00
TAP1002	14	TAP; bib; anti-ligature; HTM64 compliant.	1	£485.00	£6,790.00
TAP2501	42	Tap; deck mounted mixer tap	1	£189.24	£7,948.08
TAP289	417	TAP, monobloc, pillar mixer, integral	1	£189.24	£78,913.08

Code	Quantity	Description	Group	Rate	Total
		thermostatic, short lever			
TAP359	26	TAP, pillar, high neck, long lever, pair hot and cold, 1/2 in	1	£105.72	£2,748.72
TAP419	5	TAP; Laboratory Nitrogen	1	£150.00	£750.00
TAP809	165	TAP, bib, lever, hospital pattern, pair hot and cold, 1/2 in.	1	£105.72	£17,443.80
TAP892	44	TAP, bib, 2x8 mm thermostatic mixer, automatic action, sensor operated, non-touch	1	£273.98	£12,055.12
TAP894	615	TAP bib; hospital pattern; integral thermostatic mixer; HTM64	1	£273.98	£168,497.70
TAP900	39	Hydro tap, provision of boiling and chilled filtered water, push button activated, complete with drain and underbench filtration unit	1	£5,000.00	£195,000.00
TEL003	4	TELEPHONE handset coin/card operated with connection; wall mounted	2B	Nil	Nil
TEL018	3	TELEPHONE HOOD; acoustic; 790H 740W 580D; wall mounted.	1	£326.00	£978.00
TEL1000	1049	TELEPHONE; handset.	3	Nil	Nil
TEL2500	200	TELEPHONE; handset, wall mounted.	2A	£10.46	£2,092.00
TEL2501	3	TELEPHONE handset,taxi with connection free; wall mounted	2B	Nil	Nil
TEL2503	3	TELEPHONE; conferencing device	3	Nil	Nil
TEL900	22	VIDEO - entry/security; wall mounted entry.	1	£500.00	£11,000.00
TEL901	50	VIDEO - entry/security; wall mounted, receiving.	1	£500.00	£25,000.00
TES005	4	Bailey-Lovie-LugMar; 6m; with controls; wall mounted	2A	£7.90	£31.60
THE900	2	THERMOMETER; Tympanic	3	Nil	Nil
TOA003	3	TOASTER; automatic; electric; 2 slices; model 60 slices per hour; 1.25kW loading	3	Nil	Nil
TOA2501	11	TOASTER; automatic; electric; 4 slices	3	Nil	Nil
TOS900	2	TOSCA Unit	3	Nil	Nil
TOY001	2	TOYS: Play Equipment	3	Nil	Nil
TOY002	1	Range of soft play equipment	3	Nil	Nil
TOY003	2	Range of technology based activity equipment	2A	£7.90	£15.80
TOY901	1	Wall mounted play equipment	2B	Nil	Nil
TRA061	3	TRAY sand for children's games; 180H 810W 570D on stand 600mm height	3	Nil	Nil
TRA100	9	TRACK; curtain; one sided; 800mm length.	1	£35.00	£315.00
TRA1001	28	TRACK; curtain; door; length and shape as drawn.	1	£60.00	£1,680.00
TRA1002	27	TRACK; curtain, shower, length and shape as drawn.	1	£60.00	£1,620.00
TRA1003	290	TRACK; curtain; bed/trolley; length and shape as drawn.	1	£90.00	£26,100.00
TRA108	1	TRACK; curtain; one sided; 3300mm length.	1	£90.00	£90.00
TRA141	2	TRACK; curtain; door; one sided; 1500mm doorset.	1	£60.00	£120.00
TRF002	5	AUTOTRANSFUSION cell separator; mobile; built in air and foam detector; 1620H 270W 585D	3	Nil	Nil
TRI900	1	TRIMMER, one wheel to be diamond coated	2B	Nil	Nil
TRO021	72	TROLLEY; 4 sets of runners; 850H 600W 600D	3	Nil	Nil

Code	Quantity	Description	Group	Rate	Total
TRO064	2	TROLLEY; clearing; 1050H 1200W 600D	3	Nil	Nil
TRO068	44	TROLLEY, cleaners, mop bucket, 3 shelves tray and waste sack holder, 980H 1170W 550D	3	Nil	Nil
TRO070	7	TROLLEY, for single cylinder, type F or G, 1155H 510W 405D	3	Nil	Nil
TRO095	1	TROLLEY; battery; platform size 1000x600; maximum capacity 650kg; 500H 1100W 600D	3	Nil	Nil
TRO1000	2	TROLLEY PATIENT; ARJO Huntleigh - AKRON Streamline 2 section 2221A, height adjustable 460-910H 640W 1880D	3	Nil	Nil
TRO1002	2	TROLLEY, CFAM	3	Nil	Nil
TRO1003	1	TROLLEY, MONITOR PICU	3	Nil	Nil
TRO1004	1	TROLLEY, halogen light source for ventilating bronchoscope	3	Nil	Nil
TRO1005	5	TROLLEY, positioning accessories	3	Nil	Nil
TRO1006	2	TROLLEY; Portable PSG 500W 500D	3	Nil	Nil
TRO1007	1	TROLLEY, retriviel	3	Nil	Nil
TRO1008	8	TROLLEY, baby bath, adjustable height	3	Nil	Nil
TRO1009	1	TROLLEY, Pea Pod	3	Nil	Nil
TRO1010	1	TROLLEY, low, for tv	3	Nil	Nil
TRO1011	1	TROLLEY, linen, closed, small, size tbc	3	Nil	Nil
TRO114	2	TROLLEY; documents/library; x-ray film transport	3	Nil	Nil
TRO130	1	TROLLEY, dressing/instrument, stainless steel, antistatic castors, 870H 450W450D	3	Nil	Nil
TRO131	109	TROLLEY, dressing/instrument, stainless steel, buffered, 870H 450W 450D	3	Nil	Nil
TRO133	72	TROLLEY, dressing/instrument, stainless steel, buffered, 870H 750W 450D	3	Nil	Nil
TRO135	43	TROLLEY; Gratnell; dressing/instrument; 6 clear trays, stainless steel; buffered; 890H 510W 480D	3	Nil	Nil
TRO136	4	TROLLEY; dressing; MAYO; 900H 1050W 600D	3	Nil	Nil
TRO139	3	TROLLEY; dressing/instrument; MRI compatible; 870H 450W 450D	3	Nil	Nil
TRO147	2	TROLLEY ENT endoscope; 1205H 483W 650D	3	Nil	Nil
TRO153	1	TROLLEY; exercise mat; 1640H 1300W 710D	3	Nil	Nil
TRO180	3	TROLLEY; 2 shelves (600x390mm); buffered; o/a 945H 735W 630D	3	Nil	Nil
TRO181	4	TROLLEY, general purpose, 3 tier, buffered, 950H 890W 590D	3	Nil	Nil
TRO183	2	TROLLEY; general purpose; 2 stainless steel shelves; 940H 970W 540D	3	Nil	Nil
TRO201	8	TROLLEY, instruments, stainless steel, buffered, 870H 920W 620D	3	Nil	Nil
TRO204	21	TROLLEY instrument tray MAYO, 650W 450D	3	Nil	Nil
TRO205	12	TROLLEY, stainless steel, 1 shelf, 900H 600W 600D	3	Nil	Nil
TRO207	18	TROLLEY SSD return, 2 door, nominal 970H 1140W 725D	3	Nil	Nil
TRO233	59	TROLLEY, clean linen exchange, 3 adjustable shelves, large, 1600H 1600W 680D	3	Nil	Nil
TRO235	72	TROLLEY, contaminated linen, single ring, stainless steel	3	Nil	Nil

Code	Quantity	Description	Group	Rate	Total
TRO2506	1	TROLLEY; control; including printer	3	Nil	Nil
TRO2507	7	TROLLEY; control; including PC	3	Nil	Nil
TRO251	12	TROLLEY; medicine; stainless steel; frame epoxy coated; buffered; 1250H 750W 450D	3	Nil	Nil
TRO2512	9	TROLLEY; 2 shelves, lectern type top	3	Nil	Nil
TRO2514	1	TROLLEY; Spirometer	3	Nil	Nil
TRO254	11	TROLLEY; ward; case notes; capacity up to 40 foolscap or x-ray folders; all-round bumper; 940H 930W 570D	3	Nil	Nil
TRO270	2	TROLLEY; baby scale with 2 braked castors; paper roll holder and door protection rollers	3	Nil	Nil
TRO275	1	TROLLEY PATIENT; height adjustable 780/580mm; adjustable backrest; 600-920H 2110W 770D	3	Nil	Nil
TRO279	13	TROLLEY PATIENT, shower, 1900W 760D	3	Nil	Nil
TRO281	1	TROLLEY PATIENT; with brakes; 800H 2050W 550D	3	Nil	Nil
TRO282	33	TROLLEY PATIENT; accident; image top; with tilt and brakes; 540-1000H 740W 2110D	3	Nil	Nil
TRO283	12	TROLLEY PATIENT; non-ferrous materials; full length tilt; adjustable head rest; side rails; 2075L 625D	3	Nil	Nil
TRO296	23	TROLLEY PATIENT; tilting/reclining	3	Nil	Nil
TRO300	1	TROLLEY, plastic splint oven, 3 tier, 1050H 1275W 775D	3	Nil	Nil
TRO301	3	TROLLEY, plaster	3	Nil	Nil
TRO310	33	TROLLEY, emergency/resuscitation, complete with defibrillator, 955H 825W 575D	3	Nil	Nil
TRO317	1	TROLLEY for fibre optic bronchoscope light source complete (include: Light source; VCR; camera control unit; isolation transformer and 14 TV monitor on swiveling arm)	3	Nil	Nil
TRO371	4	TROLLEY; television/video; 2 platform trolley; 950H 850W 500D	3	Nil	Nil
TRO372	5	TROLLEY; television/video; with adjustable shelves; 1510H 457W 762D	3	Nil	Nil
TRO395	1	TROLLEY; computer/printer, 3 tier 820x540x360	3	Nil	Nil
TRO397	6	TROLLEY; accommodates complete computer equipment; height adjustable 720-870mm and paper shelf; 870H 620W 840D	3	Nil	Nil
TRO401	2	TROLLEY; walking aid	3	Nil	Nil
TRO402	1	TROLLEY, 3 shelves, 940H 970W 540D	3	Nil	Nil
TRO421	11	DEVICE; securing; medicine trolley; wall mounted.	1	£25.00	£275.00
TRO601	17	TROUGH scrub-up; hospital pattern; stainless steel; single; 75mm upstand; 800W 450D. HTM64SUH1.	1	£1,061.08	£18,038.36
TRO603	10	TROUGH scrub-up; hospital pattern; stainless steel; triple; 75mm upstand; 950H 2400W 450D. HTM64SUH3.	1	£1,561.08	£15,610.80
TRO900	51	TROLLEY; linen cage	3	Nil	Nil
TRO901	11	TROLLEY; Coil cupd	3	Nil	Nil
TRO902	4	GRATNELL TROLLEY 500x500 x870mm	3	Nil	Nil

Code	Quantity	Description	Group	Rate	Total
TRO904	4	Dirty Scopes trolley	3	Nil	Nil
TRO905	10	TROLLEY; Mobile Induction Loop	3	Nil	Nil
TRO906	1	TROLLEY; 6 coloured plastic drawers, mobile.	3	Nil	Nil
TRO907	3	TROLLEY;Caretray.	3	Nil	Nil
TRO908	1	TROLLEY; single open frame; with handle; up to 5 sets of runners; 600mm facing; approx 850H 730W 450D, MR Compatible.	3	Nil	Nil
TRO910	2	TROLLEY; dressing/instrument; stainless steel; buffered; 870H 450W 450D; 1 drawer	3	Nil	Nil
TRO911	2	TROLLEY; dressing/instrument; stainless steel; buffered; 870H 750W 450D; 1 drawer	3	Nil	Nil
TRO912	1	TROLLEY, internal lockable, single, 940H 580W 735W	3	Nil	Nil
TRO913	1	Mail trolley; double type.	3	Nil	Nil
TRO921	10	TROLLEY, instrument, stainless steel, buffered, 870H 1200W 620D	3	Nil	Nil
TRO922	3	TROLLEY, large, stainless steel,buffered, 3 shelves, 870H 1220W 620D	3	Nil	Nil
TRO923	6	TROLLEY, medium, stainless steel, buffered, 3 shelves, 870H 920W 620D	3	Nil	Nil
TRO963	1	TROLLEY, mortuary, concealment, body transportation, height adjustable, scissor action	3	Nil	Nil
TRO997	6	TROLLEY, for instrument storage for polycarbonate drawers, 450W 450D 900H	3	Nil	Nil
TRO998	2	TROLLEY, Stainless steel with 5 drawers(polycarbonate) 500 x 500 x 1200h H	3	Nil	Nil
TRO999	8	TROLLEY, for instrument storage for polycarbonate drawers. 450 x 450 x 900mm H	3	Nil	Nil
TRU004	2	TRUCK hand; electric; pallet lifting	3	Nil	Nil
TRU1000	700	TRUNKING; Power and Data trunking; length as drawn.	1	£75.00	£52,500.00
TRU1001	264	MEDICAL SERVICE TRUNKING; horizontal; length as drawn.	1	£1,500.00	£396,000.00
TRU1002	11	TRUNKING; vertical; length as drawn.	1	£1,500.00	£16,500.00
TRU2500	6	TRUNKING; floor; length as drawn.	1	£1,500.00	£9,000.00
TRU2501	1	TRUCK; pallet; manual	3	Nil	Nil
TVM001	14	TELEVISION monitor, colour, flat panel, small, wall mounted	2A	£50.00	£700.00
TVM006	10	TELEVISION monitor; colour; 585mm	3	Nil	Nil
TVM2500	282	TV / monitor flat screen with DVD player	3	Nil	Nil
TVM2501	24	TV / monitor flat screen	3	Nil	Nil
TVM2502	1	TV / monitor flat screen with HDD recording facility on trolley	3	Nil	Nil
TVM2503	4	TV / monitor flat screen with DVD player, MRI compatible	3	Nil	Nil
TVM2504	1	TV / monitor flat screen, Radio Lollipop	2B	Nil	Nil
ULT015	1	Ultrasound Mobile Unit	3	Nil	Nil
ULT016	1	ULTRASOUND; sonography with doppler for deep vein thrombosis (DVT)	3	Nil	Nil
ULT017	2	ULTRASOUND computed sonography; 128 channels; multi purpose; mobile; 1295H 635W 920D	3	Nil	Nil
ULT900	1	ULTRASOUND; Portable	3	Nil	Nil

Code	Quantity	Description	Group	Rate	Total
ULT901	1	SONOSITE MICROMAX	3	Nil	Nil
ULT902	1	SCAN MED MULTIDOP	3	Nil	Nil
ULT903	1	SIEMENS ANTARES	3	Nil	Nil
ULT904	1	TROLLEY: U/S machine (micromax & multidop) to sit on.	3	Nil	Nil
ULT905	2	Bladder Ultrasound Scanner	3	Nil	Nil
UPS003	82	Uninterrupted power supply (UPS).	1	£2,500.00	£205,000.00
VEN001	6	VENDING MACHINE, cold snacks	3	Nil	Nil
VEN002	9	VENDING MACHINE, hot/cold drinks	3	Nil	Nil
VEN003	4	VENDING MACHINE; confectionery.	3	Nil	Nil
VEN1001	1	VENTILATOR radioaerosol delivery system; radiology	3	Nil	Nil
VEN2500	20	Ventilator free standing: 1 plug, 1 Data (Lantronix) cable (would be the Servo i)	3	Nil	Nil
VEN2501	6	Ventilator free standing: 1 plug, 1 Data (Lantronix) cable (would be the SIPAP)	3	Nil	Nil
VEN2502	3	Ventilator free standing: V60 NIV 600W 600D 1350H	3	Nil	Nil
VEN2503	4	Ventilator Oscillating 750W 750D 1350H	3	Nil	Nil
VID2500	2	VIDEO; conference device.	3	Nil	Nil
VIE900	42	PEEPHOLE	1	£8.80	£369.60
VIE901	3	Visual Acuity Measuring Eqt; optotype chart; wall mounted	2A	£10.46	£31.38
VIE902	3	Visual Field Analyser; 680Hx760Wx500D	3	Nil	Nil
VIE903	1	Chat box (Salfillo Corporation)	3	Nil	Nil
VIE904	2	Digital Tape recorder	3	Nil	Nil
VIE905	1	FEES eqt: Fibreoptic endoscopic evaluation of swallowing (Rhinolaryngoscope, chip camera, light source.	3	Nil	Nil
VIE906	1	Lightwriter SL40 (Toby Churchill)	3	Nil	Nil
VMC900	35	PUMP; 572 Volumetric	3	Nil	Nil
VRA2500	4	VRA record unit; 3 toy stack	2A	£30.00	£120.00
WAR003	3	WARDROBE; 1800H 600W 600D	3	Nil	Nil
WAR004	3	WARDROBE; lockable; 1800H 750W 500D	3	Nil	Nil
WAR051	3	WARMER, ultrasound couplant gel, 200H 100W 150D	3	Nil	Nil
WAR053	20	WARMER, blood/fluid, maintains temperature between 36 and 43 deg.C at flow rates up to 500 ml/min, 35H 235W 273D	3	Nil	Nil
WAR2500	12	WARDROBE; fitted; anti-ligature; with sliding doors; size as drawn.	1	£264.08	£3,168.96
WAR2900	62	WARDROBE; lockable; 2700H 750W 500D.	1	£693.38	£42,989.56
WAR900	138	WARDROBE; lockable; 2700H 750W 500D.	1	£231.81	£31,989.78
WAR901	7	Blanket Warmer	3	Nil	Nil
WAR902	26	WARDROBE; 1800H 1200W 600D	3	Nil	Nil
WAS021	1	GLASSWASHER - either under bench or bench top	2A	£15.38	£15.38
WAS022	3	WASHING MACHINE, domestic, clothes, (capacity 7.5kg), front loading, automatic, electric	2A	£15.38	£46.14
WAS037	1	WASHING MACHINE, footwear, 850H 900W 660D	2A	£50.00	£50.00
WAS038	4	WASHING MACHINE, heavy duty commercial, clothes, automatic, (8kg	2A	£50.00	£200.00

Code	Quantity	Description	Group	Rate	Total
		load), front loading, 1040H 660W 630D			
WAS051	8	WASH; eye; first aid; with mirror; wall mounted; 360H 250W 100D.	1	£383.66	£3,069.28
WAS070	3	DISHWASHER; domestic	2A	£15.38	£46.14
WAS100	823	WASTE, unslotted flush-grated, metal, 1.1/4 in	1	£17.77	£14,624.71
WAS1000	742	TRAP; concealed waste; for back outlet basins.	1	£17.93	£13,304.06
WAS101	246	WASTE, unslotted recessed grated, metal, 1.1/4 in, with plug and chain	1	£19.42	£4,777.32
WAS102	210	WASTE, unslotted flush-grated, metal, 1.1/2 in	1	£18.32	£3,847.20
WAS103	27	WASTE, unslotted recessed grated, metal, 1.1/2 in, with plug and chain	1	£20.52	£554.04
WAS105	45	WASTE DISPOSAL UNIT; sink waste.	1	£20.52	£923.40
WAS107	340	TRAP, bottle, 1.1/4 in, plastic resealing	1	£17.26	£5,868.40
WAS108	257	TRAP, bottle, 1.1/2 in, plastic resealing	1	£17.93	£4,608.01
WAS2500	12	DISHWASHER; under bench; high temperature; 2 drawer	2A	£50.00	£600.00
WAS900	2	WASHING MACHINE/DRYER: Combined	2A	£15.38	£30.76
WAS902	5	Waste connection for catering equipment.	1	£50.00	£250.00
WAS903	1	TRAP, plaster, large, easily removed for disposal	1	£50.00	£50.00
WCH002	123	WC with seat, 520-550 projection, wall hung, hospital pattern, rimless pan, vitreous china, HTM64WCH	1	£483.29	£59,444.67
WCH005	26	WC pan with seat, 520-550 mm projection, rimless pan, vitreous china.	1	£483.29	£12,565.54
WCH006	251	WC with seat, 700mm projection, wall hung, hospital pattern, rimless pan, vitreous china.	1	£550.00	£138,050.00
WCH1000	12	WC/toilet pan with seat, 700 mm projection, hospital pattern, rimless pan, vitreous china.	1	£683.29	£8,199.48
WCH1001	4	WC with seat, 700mm projection, wall hung, rimless pan, vitreous china.	1	£700.00	£2,800.00
WCH901	1	Mowbray (toilet frame)	3	Nil	Nil
WCH902	1	Toilet seat raiser; 2 inch	3	Nil	Nil
WCH903	1	Toilet seat raiser; 4 inch	3	Nil	Nil
WED2501	2	WEDGE; Foam	3	Nil	Nil
WHBN1011	7	WASH BASIN; clinical; large 60cm; with non touch panel mounted tap/s.	1	£488.19	£3,417.33
WKT1003H	261	WORKTOP; 920 high 600 deep 40mm thick; with 50mm upstand; length as drawn.	1	£150.44	£39,264.84
WKT1003L	116	WORKTOP; 720 high 600 deep 40mm thick; with 50mm upstand; length as drawn.	1	£150.44	£17,451.04
WKT1004H	24	WORKTOP; 920 high 800 deep, laboratory; length as drawn	1	£696.45	£16,714.80
WKT1005H	5	WORKTOP; 920 high 600 deep, laboratory; length as drawn	1	£562.62	£2,813.10
WKT1006H	169	WORKTOP; 920 high 800 deep 40mm thick; with 50mm upstand; length as drawn.	1	£213.00	£35,997.00
WKT1006L	192	WORKTOP; 720 high 800 deep 40mm thick; with 50mm upstand; length as drawn.	1	£213.00	£40,896.00
WKT1008	9	WORKTOP; corian, 600D length as	1	£794.87	£7,153.83

Code	Quantity	Description	Group	Rate	Total
		drawn			
WKT1011	1	WORKTOP; dished; stainless steel; with central double bowl and double drainer; cantilevered from wall; 1800W 650D; HTM63.	1	£1,042.44	£1,042.44
WKT1012	1	WORKTOP; dished; stainless steel; with central double bowl and double drainer; cantilevered from wall; 2400W 650D; HTM63	1	£1,480.21	£1,480.21
WKT124	2	WORKTOP, cantilevered from wall, 1200W 550D.	1	£91.87	£183.74
WKT160	5	WORKTOP variable height; motorised system; consists of: control unit; electric motor; transformer; steering unit; 673/1023H 2000W 600D.	1	£3,929.08	£19,645.40
WKT2501	2	WORKTOP; heavy duty.	1	£200.00	£400.00
WKT2504	1	WORKTOP; dished; stainless steel; with right hand sink bowl; cantilevered from wall; 1200W 650D; HTM63.	1	£427.32	£427.32
WKT263	1	WORKTOP; dished; stainless steel; cantilevered from wall; 900W 650D.	1	£383.96	£383.96
WKT300L	10	WORKTOP; dished; stainless steel; with left hand sink bowl; cantilevered from wall; 1200W 650D; HTM63.	1	£700.58	£7,005.80
WKT300R	38	WORKTOP; dished; stainless steel; with right hand sink bowl; cantilevered from wall; 1200W 650D; HTM63	1	£700.58	£26,622.04
WKT304	1	WORKTOP; dished; stainless steel; with right hand sink bowl; cantilevered from wall; 1500W 650D.	1	£822.81	£822.81
WKT311R	1	WORKTOP; dished; stainless steel; with right hand sink bowl; cantilevered from wall; 2100W 650D; HTM63.	1	£854.86	£854.86
WKT409	2	WORKTOP; plain; stainless steel; cantilevered from wall; 1500W 550D.	1	£441.72	£883.44
WKT470	3	WORKTOP; plain; stainless steel; cantilevered from wall; 600W 650D.	1	£341.07	£1,023.21
WKT485	2	WORKTOP; plain; stainless steel; cantilevered from wall; 2100W 650D.	1	£561.57	£1,123.14
WKT488	2	WORKTOP; plain; stainless steel; cantilevered from wall; 2400W 650D.	1	£608.55	£1,217.10
WOR008	3	WORKBENCH; heavy duty; stainless steel; 900H 2100W 650D.	1	£608.55	£1,825.65
WOR174	1	WORKTOP; stainless steel; 1 integral sink bowl; 2400W 600D.	1	£1,231.46	£1,231.46
WOR901	1	WORKTOP; stainless steel, for plaster work, length as drawn, upturns front and back, to include sink, cupboard as specialist design	2B	Nil	Nil
WOR905	1	WORKBENCH; for dental technician complete with dust extraction, lighting, storage; to specialist design	2B	Nil	Nil
WRT002	7	WORKTOP, non-clinical, 600W 400D	1	£48.68	£340.76
WRT003	1	WORKTOP, 1200W 400D	1	£92.57	£92.57
WST001	1	WASTE, recessed grated metal, 38mm with standpipe, overflow	1	£67.30	£67.30
XRA001	2	X-RAY UNIT TUBE; dental; mobile	3	Nil	Nil
XRA003	1	X-RAY UNIT TUBE; dental; fixed	2B	Nil	Nil
XRA004	1	X-RAY GENERATOR for dental tube; wall mounted	2B	Nil	Nil
XRA005	1	X-RAY UNIT DENTAL PANORAMIC (OPG); height adjustable; floor mounted	2B	Nil	Nil
XRA006	1	X-RAY IMAGING CEPHALOSTAT	2B	Nil	Nil

Code	Quantity	Description	Group	Rate	Total
		ATTACHMENT; dental; (Part of XRA005)			
XRA007	5	X-RAY IMAGING UNIT; digital	3	Nil	Nil
XRA010	5	X-RAY CS; ceiling suspensions; with telescopic tube of column and rotating/tilting arm	2B	Nil	Nil
XRA011	3	X-RAY CS CONTROL DESK UNIT; freestanding;	2B	Nil	Nil
XRA012	3	X-RAY CS STAND for control unit;	2B	Nil	Nil
XRA013	3	X-RAY CS GENERATOR CABINET;	2B	Nil	Nil
XRA015	8	X-RAY CS RAIL; ceiling suspensions; 6280mm; (Part of XRA010)	2B	Nil	Nil
XRA018	8	X-RAY CS RAIL; ceiling suspensions; 2455mm (3655 w/optional extension rail)	2B	Nil	Nil
XRA021	3	X-RAY TABLE PATIENT; floating top; motorised variable height horizontal bucky; 800H 2180W 700D	2B	Nil	Nil
XRA030	3	X-RAY CHEST stand; universal; includes Bucky mechanism	2B	Nil	Nil
XRA040	2	X-RAY Resus equipment	2B	Nil	Nil
XRA902	4	X-RAY; unit; intra oral wall mounted.	2B	Nil	Nil

CDS Equipment Totals

Code	Quantity	Description	Group	Rate	Total
BAS015	20	BASIN; small; stainless steel; apron front; 1 tap hole; 500W 400D	1	£414.00	£8,280.00
BIN037	3	BIN wheelie; 770 litre; 1360H1360W 800D	3	By others	Nil
BOA034	10	BOARD; marker; whiteboard; dry-wipe; with pen holder; wall mounted; 600H 900W.	1	£115.00	£1,150.00
BOA037	2	BOARD; marker; whiteboard; dry-wipe; with pen holder; wall mounted; 900H 1200W	1	£115.00	£230.00
CAT900	1	BAIN MARIE – stand alone	1	£1,248.90	£1,248.90
CAT901	18	Fly Killer	1	£184.00	£3,312.00
CAT903	1	INDUCTION TOP RANGE	1	£6,494.91	£6,494.91
CAT904	3	UPRIGHT REFRIGERATOR	1	£2,260.21	£6,780.63
CAT905	2	UPRIGHT FREEZER	1	£1,422.24	£2,844.48
CAT908	3	STAINLESS STEEL worktop	1	£462.30	£1,386.90
CAT909	3	STAINLESS STEEL TABLE with sink	1	£380.65	£1,141.95
CAT910	4	STAINLESS STEEL TABLE	1	£331.20	£1,324.80
CAT913	2	STAINLESS STEEL worktop	1	£437.00	£874.00
CAT916	1	TILTING KETTLE 76 litre	1	£5,172.99	£5,172.99
CAT917	3	COMBINATION OVENS 6 grid	1	£9,657.70	£28,973.10
CAT918	1	BRATT PAN	1	£2,605.61	£2,605.61
CAT919	3	Twin Basket Fryer	1	£5,590.73	£16,772.19
CAT921	1	COMBINATION OVEN 20 grid	1	£11,388.45	£11,388.45
CAT923	1	Mixer 60 quart	1	£9,361.00	£9,361.00
CAT926	1	BLAST CHILLER/FREEZER	1	£4,157.97	£4,157.97
CAT928	2	CANOPY overhead for extract ventilation - inc. filters & lights - Ductwork & fans by others	1	£7,855.05	£15,710.10
CAT929	2	FOOD PROCESSOR	1	£2,531.84	£5,063.68
CAT930	2	MIXER	1	£1,967.08	£3,934.16
CAT931	15	Stainless Steel Shelving 475mm	1	£947.60	£14,214.00

Code	Quantity	Description	Group	Rate	Total
		deep as drawn			
CAT932	1	Pan Racks 475mm deep as drawn	1	£305.90	£305.90
CAT937	2	STAINLESS STEEL TABLE	1	£308.20	£616.40
CAT938	4	STAINLESS STEEL TABLE	1	£165.60	£662.40
CAT940	1	Waste Disposal Unit/Dewaterer linked	1	£11,208.76	£11,208.76
CAT941	1	S/Steel Panwash table, sinks	1	£563.50	£563.50
CAT950	1	Servery Counter Bar Bar and Condiment Unit	3	By others	Nil
CAT952	1	Salamander Grill	1	£1,433.91	£1,433.91
CAT955	2	Sandwich packaging equipment	1	£4,600.00	£9,200.00
CDS001	10	DOUBLE BASE UNIT	1	£3,172.85	£31,728.50
CDS002	1	SINGLE BASE UNIT	1	Incl.	Nil
CDS003	7	DRAWER BASE UNIT	1	£3,515.55	£24,608.85
CDS004	5	CORNER BASE UNIT	1	Incl.	Nil
CDS005	7	SINK BASE UNIT	1	Incl.	Nil
CDS006	3	SINK BASE UNIT C/W SET OF DRAWERS	1	Incl.	Nil
CDS007	23	DOUBLE WALL UNIT	1	£450.80	£10,368.40
CDS008	9	SINGLE WALL UNIT	1	£159.85	£1,438.65
CDS009	5	CORNER WALL UNIT	1	£296.70	£1,483.50
CDS010	10	DISHWASHER STAND	1	£172.50	£1,725.00
CDS012	1	TRUCK FOR MIXER BOWL	1	£455.40	£455.40
CDS013	18	TAPS	1	£25.28	£455.04
CDS014	1	SERVICE SPINE	1	By others	Nil
CDS015	1	STAINLESS STEEL CLADDING around column	1	By others	Nil
CDS016	3	10 Grid Combination Oven	1	£6,556.73	£19,670.19
CDS017	3	Staking Kit for Items 1.19 & 1.20	1	£524.98	£1,574.94
CDS018	2	EXTRACTION CANOPY for Pan Wash Machine - inc. filters & lights - Ductwork & fans by others	1	£1,178.32	£2,356.64
CDS019	2	SPRAY ARM	1	£173.03	£346.06
CDS020	2	Stainless Steel Shelving 475mm deep as drawn	1	£972.90	£1,945.80
CDS021	1	STAINLESS STEEL TABLE	1	£297.85	£297.85
CDS022	1	STAINLESS STEEL TABLE with sink	1	£414.00	£414.00
CDS023	1	STAINLESS STEEL TABLE	1	£181.70	£181.70
CDS024	1	Double Door Refrigerator	1	£1,707.78	£1,707.78
CDS025	1	COLD ROOM	1	£30,748.70	£30,748.70
CDS026	1	REFRIGERATION EQUIPMENT	1	Incl.	Nil
CDS027	1	TEMP MONITORING SYSTEM	1	Incl.	Nil
CDS028	3	Stainless Steel Shelving 475mm deep as drawn	1	Incl.	Nil
CDS029	1	STAINLESS STEEL TABLE	1	£154.10	£154.10
CDS031	1	STAINLESS STEEL TABLE with sink	1	£414.00	£414.00
CDS033	1	FREEZER ROOM	1	Incl.	Nil
CDS034	1	REFRIGERATION EQUIPMENT	1	Incl.	Nil
CDS035	1	TEMP MONITORING SYSTEM	1	Incl.	Nil
CDS036	1	FREEZER ROOM	1	Incl.	Nil
CDS037	1	REFRIGERATION EQUIPMENT	1	Incl.	Nil
CDS038	1	TEMP MONITORING SYSTEM	1	Incl.	Nil
CDS039	1	COLD ROOM	1	£16,871.65	£16,871.65

Code	Quantity	Description	Group	Rate	Total
CDS040	1	REFRIGERATION EQUIPMENT	1	Incl.	Nil
CDS041	1	TEMP MONITORING SYSTEM	1	Incl.	Nil
CDS042	7	Stainless Steel Shelving 475mm deep as drawn	1	£10,666.25	£74,663.75
CDS043	1	Cold Room	1	£47,511.10	£47,511.10
CDS044	1	REFRIGERATION EQUIPMENT	1	Incl.	Nil
CDS045	1	TEMP MONITORING SYSTEM	1	Incl.	Nil
CDS046	1	Waste Bin & Dolly	1	£41.22	£41.22
CDS047	1	Dishwash Inlet with 2no bowls & void for bin	1	£911.95	£911.95
CDS048	1	Extract Canopy - inc. filters & lights - Ductwork & fans by others	1	£811.01	£811.01
CDS049	1	Dishwash Outlet with basket Runners	1	£369.15	£369.15
CDS050	1	Racking	1	£108.10	£108.10
CDS051	1	Wall Bench	1	£236.90	£236.90
CDS052	1	Wall Bench	1	£154.10	£154.10
CDS053	1	Prep Sink	1	£414.00	£414.00
CDS054	1	Wall Bench	1	£159.85	£159.85
CDS055	2	Mobile Centre Bench	1	£338.10	£676.20
CDS056	2	Infill Bench	1	£223.10	£446.20
CDS057	1	Griddle	1	£154.10	£154.10
CDS058	1	Low Level Griddle Stand	1	£180.55	£180.55
CDS059	1	Wall Bench with Strengthened Top	1	£368.00	£368.00
CDS060	1	Grill Bench Stand	1	£172.50	£172.50
CDS061	1	Microwave Housing	1	£5,175.00	£5,175.00
CDS062	1	Microwave	1	£897.00	£897.00
CDS063	1	Vending Housing	1	£4,025.00	£4,025.00
CDS064	3	Recycle Bins	1	By others	Nil
CDS065	2	COLD ROOM	1	£3,632.85	£7,265.70
CDS066	2	REFRIGERATION EQUIPMENT	1	Incl.	Nil
CDS067	1	TEMP MONITORING SYSTEM	1	£345.00	£345.00
CDS069	1	Pass Through Dishwasher	1	£3,269.45	£3,269.45
CDS070	2	Pan Wash Machine	1	£7,680.85	£15,361.70
CDS071	2	Tray Clearing Trolley	1	£575.00	£1,150.00
CDS072	10	Dishwasher Waste	1	By others	Nil
CDS073	1	MOBILE STAINLESS STEEL TABLE	1	By others	Nil
CDS501	1	OUTLET isolator 20amp; SP&N; wall mounted	1	By others	Nil
CDS502	1	OUTLET isolator 16amp; SP&N; wall mounted	1	By others	Nil
CDS503	4	13amp; SP&N at high level for lighting	1	By others	Nil
CDS504	3	OUTLET isolator 16amp; TP&N; wall mounted	1	By others	Nil
CDS505	2	OUTLET isolator 32amp; TP&N; wall mounted	1	By others	Nil
CDS506	1	OUTLET isolator 15amp; TP&N; wall mounted	1	By others	Nil
CDS507	4	OUTLET isolator 32amp; TP&N; wall mounted	1	By others	Nil
CDS508	1	OUTLET isolator 100amp; TP&N; wall mounted	1	By others	Nil
CDS509	2	OUTLET isolator 13amp; TP&N; wall	1	By others	Nil

Code	Quantity	Description	Group	Rate	Total
		mounted			
CDS510	1	OUTLET isolator 20amp; TP&N; wall mounted	1	By others	Nil
CDS511	1	OUTLET isolator 63amp; TP&N; wall mounted	1	By others	Nil
CDS512	2	OUTLET isolator 25amp; SP&N; wall mounted	1	By others	Nil
CDS513	6	20amp; SP&N; Supply in remote location	1	By others	Nil
CDS514	6	16amp; TP&N; Electrical Supply @ High Level Wired to Control Box	1	By others	Nil
CDS515	3	TUNDISH FOR COLD ROOM	1	By others	Nil
DIS007	10	DISPENSER; paper towel roll; wall mounted	2A	By others	Nil
DIS013	20	DISPENSER; paper towel; wall mounted	2A	By others	Nil
DIS024	8	DISPENSER; soap; wall mounted	2A	By others	Nil
DIS030	12	DISPENSER, soap, disposable single cartridge, lever action, wall mounted	2A	By others	Nil
DIS2500	17	DISPENSER; danicentre; combined glove/apron.	2A	By others	Nil
HOL005	28	HOLDER; bin; medium; capacity 70 litres; freestanding	3	By others	Nil
OUT005	110	Single Socket Outlet	1	£37.90	£4,169.00
OUT010	26	Twin Socket Outlet	1	£40.54	£1,054.04
OUT052	11	Switched Fused Spur	1	£33.88	£372.68
OUT075	1	OUTLET isolator 20amp; TP&N; wall mounted	1	£47.69	£47.69
OUT301	58	OUTLET, cold water for equipment	1	£79.57	£4,615.06
OUT305	40	OUTLET hot water for equipment.	1	£79.57	£3,182.80
OUT345	9	TRAPPED FLOOR GULLY	1	£253.90	£2,285.10
OUT902	1	CONNECTION UNIT; 3 phase for mixer	1	By others	Nil
OVE015	10	OVEN; microwave; super heavy duty; 1850watt; capacity 26 litres; stainless steel;	3	By others	Nil
REF120	10	REFRIGERATOR, capacity 160 litre refrigerator, 1650H 550W 610D	3	By others	Nil
REF2503	10	REFRIGERATOR special feeds;	3	By others	Nil
SWC025	10	Light Switch	1	£30.18	£301.80
TAP894	18	TAP bib; hospital pattern; integral thermostatic mixer; HTM64	1	£966.00	£17,388.00
TAP900	10	Hydro tap, provision of boiling and chilled filtered water, push button activated, complete with drain and underbench filtration unit	1	£3,105.00	£31,050.00
TBC001	45	NHSL To Confirm . Electrical Requirements	1	By others	Nil
TBC002	10	NHSL To Confirm Water Requirements	1	By others	Nil
TOA2501	10	TOASTER; automatic; electric; 4 slices	3	By others	Nil
TRO2509	10	Beverage Trolley	3	By others	Nil
TRO2513	10	CATERING TROLLEY	3	By others	Nil

Code	Quantity	Description	Group	Rate	Total
VEN001	1	VENDING MACHINE, cold snacks	3	By others	Nil
VEN002	1	VENDING MACHINE, hot/cold drinks	2A	By others	Nil
VEN003	1	VENDING MACHINE; confectionery.	3	By others	Nil
WAS100	47	WASTE, unslotted flush-grated, metal, 1.1/4 in	1	£17.77	£835.19
WAS107	20	TRAP, bottle, 1.1/4 in, plastic resealing	1	£17.26	£345.20
WAS108	40	TRAP, bottle, 1.1/2 in, plastic resealing	1	£17.93	£717.20
WAS2500	10	DISHWASHER; under bench; high temperature; 2 drawer	2A	By others	Nil
WAS2501	1	Dishwash Waste Connection	1	By others	Nil
WAS902	8	Waste connection for catering equipment	1	£50.00	£400.00

SECTION 1

SCHEDULE PART 15

INSURANCE REQUIREMENTS

SECTION 1

POLICIES TO BE TAKEN OUT BY CONTRACTOR AND MAINTAINED DURING THE DESIGN AND CONSTRUCTION PHASE

Policies to be taken out by Contractor and maintained during the design and construction phase.

1. PROFESSIONAL INDEMNITY INSURANCE

1.1 **Insured**

The Contractor only

1.2 **Sum Insured**

At all times £10,000,000.00

1.3 **Period of Insurance**

From the date of this Agreement until the twelve (12) years from the Actual Completion Date.

SECTION 2

POLICIES TO BE TAKEN OUT BY PROJECT CO AND MAINTAINED DURING THE DESIGN AND CONSTRUCTION PHASE

Common to each policy in Section 2 (*Policies to be Taken out by Project Co and Maintained During the Design and Construction Phase*) (unless stated otherwise):

Insureds:

1 Board

2 Project Co

3 Contractor

4 Service Provider

5 Construction sub-contractors of any tier

6 Senior Funders

7 Subordinated Funders

8 Consultants - for their site activities only

each for their respective rights and interests in the Project

1. CONTRACTORS' 'ALL RISKS' INSURANCE (CAR)

1.1 **Insured Property**

The permanent and temporary works, materials (including but not limited to equipment supplied by the Board or the Project Co on behalf of the Board, goods, plant and equipment for incorporation in the works (other than constructional plant, tools, accommodation and equipment belonging to or the responsibility of the Contractor or the Sub-contractors) and all other property used or for use in connection with works associated with the Works.

1.2 **Coverage**

"All risks" of physical loss or damage to the Insured Property unless otherwise excluded.

1.3 **Sum Insured**

At all times an amount not less than the full reinstatement or replacement value of the Insured Property, but not less than the Contract Price plus provision to include Cover Features & Extensions as appropriate.

1.4 **Maximum Deductible**

Not to exceed £150,000 each and every claim for defective design, materials and workmanship, and in respect of all other claims £10,000.

1.5 **Territorial Limits**

United Kingdom including offsite storage and during inland transit.

1.6 **Period of Insurance**

From the date of this Agreement until the Actual Completion Date and thereafter in respect of defects liability until expiry of the 12 months defects liability period on a guaranteed maintenance basis.

1.7 **Cover Features & Extensions**

1.7.1 Terrorism

1.7.2 Munitions of war clause

1.7.3 Additional costs of completion clause

1.7.4 Professional fees clause (including Board professional fees incurred during any period of reinstatement)

1.7.5 Debris removal clause

1.7.6 72 hour clause

1.7.7 European Union local authorities clause

1.7.8 Free issue materials clause

1.7.9 10% escalation clause

1.7.10 Automatic reinstatement of sum insured clause

1.7.11 Loss minimisation

1.7.12 Testing/commissioning period clause

1.7.13 Plans and documents clause

1.7.14 Expediting expenses

1.7.15 Temporary repairs

1.7.16 [Not Used]

1.8 **Principal Exclusions**

1.8.1 War and related perils (UK market agreed wording)

1.8.2 Nuclear/radioactive risks (UK market agreed wording)

1.8.3 Pressure waves caused by aircraft and other aerial devices travelling at sonic or supersonic speeds

1.8.4 Wear, tear and gradual deterioration

1.8.5 Consequential financial losses

1.8.6 Cyber risks

1.8.7 Inventory losses

1.8.8 Fraud and employee dishonesty

1.8.9 Faulty design, workmanship and materials DE5 or LEG3 option extension

2. DELAY IN START UP INSURANCE (DSU)

2.1 Insureds

2.1.1 Project Co

2.1.2 Senior Funders

2.1.3 Subordinated Funders

each for their respective rights and interests in the Project.

2.2 Indemnity

In respect of:

2.2.1 loss of anticipated Revenue during at least the Minimum Indemnity Period arising from a delay in completion of the Project as a result of loss or damage covered under the Contractors' All Risks' Insurance effected in accordance with Item 1 (*Contractors' 'All Risks' Insurance (CAR)*) of Schedule Part 15 (*Insurance Requirements*), including physical loss or damage which would be indemnifiable but for the application of any deductible;

2.2.2 the economic additional expenditure necessarily and reasonably incurred for the purpose of avoiding or reducing the loss of Revenue of Project Co which without such expenditure would have taken place, during the Minimum Indemnity Period.

2.3 Sum Insured

An amount sufficient to cover the sums the subject of the Indemnity for the Minimum Indemnity Period.

2.4 Maximum Excess

45 days.

2.5 Minimum Indemnity Period

24 months.

2.6 Period of Insurance

As per the Contractors' "All Risks" Insurance, excluding the defects liability period.

2.7 Cover Features & Extensions

2.7.1 Denial of access

2.7.2 Utilities

2.7.3 Terrorism

2.7.4 Automatic Reinstatement of sum insured

2.7.5 Professional Fees

2.7.6 [Not Used]

2.8 Principal Exclusions

2.8.1 The exclusions under the Contractors' 'All Risks' Insurance, other than for consequential financial losses.

2.8.2 Delayed response by a public body or state authority.

3. CONSTRUCTION THIRD PARTY LIABILITY INSURANCE

3.1 **Interest**

To indemnify the Insured in respect of all sums that they may become legally liable to pay (including claimant's costs and expenses) as damages in respect of accidental:

3.1.1 death, or bodily injury, illness, disease contracted by any person;

3.1.2 loss or damage to property;

3.1.3 interference to property or any easement right of air, light, water or way or the enjoyment or use thereof by obstruction, trespass, nuisance, loss of amenities, or any like cause.

happening during the Period of Insurance and arising out of or in connection with the Project.

3.2 **Limit of Indemnity**

Not less than one hundred million pounds (£100,000,000) in respect of any one occurrence, the number of occurrences being unlimited, but in the aggregate in respect of pollution liability.

3.3 **Maximum Deductible**

£10,000 for each and every occurrence of property damage. (Personal injury claims will be paid in full).

3.4 **Territorial Limits**

UK and elsewhere in the world in respect of non manual visits.

3.5 **Jurisdiction**

Worldwide excluding USA and Canada.

3.6 **Period of Insurance**

As per the Contractors' "All Risks" Insurance, including the defects liability period.

3.7 **Cover Features & Extensions**

3.7.1 Munitions of war

3.7.2 Cross liability clause

3.7.3 Contingent motor

3.7.4 Legal defence costs in addition

3.7.5 Personal injury to include false imprisonment, wrongful arrest, eviction or any like cause

3.7.6 Defective premises act clause

3.7.7 Data protection act clause

3.7.8 Indemnify to employees and directors

3.7.9 [Not Used]

3.8 **Principal Exclusions**

3.8.1 Liability for death, illness, disease or bodily injury sustained by employees of the insured.

3.8.2 Liability arising out of the use of mechanically propelled vehicles whilst required to be compulsorily insured by legislation in respect of such vehicles.

3.8.3 Liability in respect of predetermined penalties or liquidated damages imposed under any contract entered into by the Insured.

3.8.4 Liability in respect of loss or damage to property in the care, custody and control of the insured but this exclusion is not to apply to all property belonging to the Board which is in the care, custody and control of another Insured.

3.8.5 Events more properly covered under a professional indemnity policy.

3.8.6 Liability arising from the ownership, possession or use of any aircraft or marine vessel.

3.8.7 Liability arising from seepage and pollution unless caused by a sudden, unintended and unexpected occurrence.

3.8.8 Losses indemnified under the CAR policy or DSU policy.

3.8.9 Asbestos.

3.8.10 Toxic mould.

SECTION 3

[NOT USED]

SECTION 4

[NOT USED]

SECTION 5

[NOT USED]

SECTION 6

[NOT USED]

SCHEDULE PART 16

CHANGE PROTOCOL

SECTION 1

DEFINITIONS

In this Schedule Part 16 (*Change Protocol*) and elsewhere in this Agreement (save where Schedule Part 1 (*Definitions and Interpretation*) provides to the contrary) the following words shall have the following meanings:

"Affordable"	means within the revenue resource parameters determined by Project Co and notified in writing by it to the Contractor as available for a proposed High Value Change;
"Approval Criteria"	has the meaning given in paragraph 7 (*Approval Criteria*) of Section 4 (*High Value Changes*) of this Schedule Part 16 (*Change Protocol*);
"Approved Criteria"	has the meaning given in paragraph 8.2.1 of Section 4 (*High Value Changes*) of this Schedule Part 16 (*Change Protocol*);
"Project Co Change"	means, as the case may be, a Low Value Change, a Medium Value Change or a High Value Change;
"Project Co Change Notice"	means a notice issued in accordance with this Schedule Part 16 (*Change Protocol*) requiring a Project Co Change;
"Capital Cost"	means in relation to any High Value Change the cost of carrying out the design, construction and commissioning of any construction works required to implement that High Value Change;
"Catalogue of Small Works and Services" and **"Catalogue"**	means the list of prices and time periods for types of Low Value Changes set out in Appendix 1 Part 1 (*Catalogue*) to this Schedule Part 16 (*Change Protocol*), as amended from time to time in accordance with paragraph 3 (*Contractor Response and Project Co Confirmation*) of Section 2 (*Low Value Changes*) of this Schedule Part 16 (*Change Protocol*);
"Catalogue Price"	means the total cost (excluding VAT) of carrying out a Low Value Change as set out in the Catalogue;
"Catalogue Review Date"	means each third anniversary of the Commencement Date;
"Change"	means a change in the Works, the Facilities and/or Services or additional works and/or services or a change in the Board's Policies that may be made under Clause 33 (*Change Procedure*) or this Schedule Part 16 (*Change Protocol*);
"Change in Costs"	means in respect of any Relevant Event, the effect of that Relevant Event (whether of a one-off or recurring nature, and whether positive or negative) upon the actual or

anticipated costs, losses or liabilities of the Contractor and/or the Contractor and/or any Service Provider (without double counting), including, as relevant, the following:

(a) the reasonable costs of complying with the requirements of Clauses 29 (*Delay Events*), 32 (*Changes in Law*) and/or Sections 2 (*Low Value Changes*) to 4 (*High Value Changes*) of this Schedule Part 16 (*Change Protocol*), including the reasonable costs of preparation of design and estimates;

(b) the costs of continued employment of, or making redundant, staff who are no longer required;

(c) the costs of employing additional staff;

(d) reasonable professional fees;

(e) not used

(f) not used;

(g) not used;

(h) Capital Expenditure (or, in the case of a Relevant Event which is a Relevant Change in Law, Capital Expenditure for which Project Co is responsible);

(i) not used;

(j) any deductible or increase in the level of deductible, or any increase in premium under or in respect of any insurance policy; and

(k) Direct Losses or Indirect Losses, including reasonable legal expenses on an indemnity basis;

"Cost" where used in the definitions of High Value Change and Low Value Change means the immediate cost that will be incurred by the Contractor to implement the relevant Change, disregarding any Whole Life Costs;

"Derogated Low Value Change" means:

(a) installation or relocation of shelving, notice boards, white boards, clocks, mirrors, coat hooks, towel holders, toilet roll holders, soap dispensers and ad-hoc wall protection; and

(b) any other Low Value Change that:

(i) consists of minor works;

(ii) only affects the interior of the Facilities;

(iii) does not affect any of the mechanical and electrical equipment of the Facilities;

(iv) does not involve any interference with the service media in the Facilities;

(v) will not conflict with any Programmed Maintenance or Lifecycle Replacement; and

(vi) will not prejudice any of the Operational Insurances;

"Derogated Low Value Change Notice" means a notice given by Project Co in accordance with paragraph 1.2 of Section 2 (*Low Value Changes*) of this Schedule Part 16 (*Change Protocol*);

"Estimate" has the meaning given in paragraph 3 of Section 3 (*Medium Value Changes*) of this Schedule Part 16 (*Change Protocol*);

"Estimated Change in Project Costs" means, in respect of any Relevant Event, the aggregate of any Change in Costs;

"High Value Change" means:

(a) a Change requested by Project Co that, in the reasonable opinion of Project Co, is likely either to Cost in excess of five hundred thousand pounds (£500,000) index linked; or

(b) any other Change that the parties agree is to be treated as a High Value Change; or

(c) a Change that is considered a High Value Change in the Project Agreement;

"High Value Change Proposal" means a proposal satisfying the requirements of paragraph 3.4 of Section 4 (*High Value Changes*) of this Schedule Part 16 (*Change Protocol*);

"High Value Change Requirements" has the meaning given in paragraph 2.1.3 of Section 4 (*High Value Changes*) of this Schedule Part 16 (*Change Protocol*);

"High Value Change Stage 2 Submission" has the meaning given in paragraph 4.1.1 of Section 4 (*High Value Changes*) of this Schedule Part 16 (*Change Protocol*);

"Low Value Change" means a Change which is not considered to be a High Value Change or a Medium Value in the Project Agreement and is either:

(a) of a type listed in the Catalogue of Small Works and Services; or

(b) is not so listed, but has an individual Cost not exceeding twenty five thousand pounds (£25,000) index linked , or as otherwise agreed from time to time, except for any request that would (if implemented) increase the likelihood of the Contractor failing to meet the Board's Construction Requirements and/or the Service

Level Specification or materially and adversely affect the Contractor's ability to perform its obligations under this Agreement;

"Medium Value Change"	means a Change requested by Project Co which is not a Low Value Change or a High Value Change;
"Contractor Change"	means a Change that is initiated by the Contractor by submitting a Contractor Notice of Change to Project Co pursuant to Section 5 (*Contractor Changes*) of this Schedule Part 16 (*Change Protocol*);
"Contractor Notice of Change"	has the meaning given in paragraph 1 of Section 5 (*Contractor Changes*) of this Schedule Part 16 (*Change Protocol*);
"Relevant Event"	means an event or circumstance in which this Agreement expressly provides for an adjustment to the Contract Sum to be made;
"Review Procedure"	means the procedure set out in Schedule Part 8 (*Review Procedure*);
"Small Works and Services Rates"	means the rates to be applied in respect of any request from Project Co for a Low Value Change set out in Appendix Appendix 1 Part 2 (*Small Works and Services Rates*) to this Schedule Part 16 (*Change Protocol*), as amended from time to time in accordance with paragraph 8 of Section 2 (*Low Value Changes*) of this Schedule Part 16 (*Change Protocol*);
"Stage 1 Approval"	has the meaning given in paragraph 3.7 of Section 4 (*High Value Changes*) of this Schedule Part 16 (*Change Protocol*);
"Stage 1 Approved Project"	has the meaning given in paragraph 3.7 of Section 4 (*High Value Changes*) of this Schedule Part 16 (*Change Protocol*);
"Stage 2 Approval"	has the meaning given in paragraph 8.2.1 of Section 4 (*High Value Changes*) of this Schedule Part 16 (*Change Protocol*);
"Target Cost"	has the meaning given in paragraph 2.1.2 of Section 4 (*High Value Changes*) of this Schedule Part 16 (*Change Protocol*);
"Third Party Costs"	means the costs incurred by the Contractor with third parties in responding to a Project Co Change Notice for a Medium Value Change or a High Value Change, including, but not limited to, the Sub-Contractors, consultants and advisers; and
"Whole Life Cost"	means the estimated and (to the extent that such information is available) the actual cost of operating and maintaining that High Value Change over its intended design life (consistent with Project Co's Proposals).

SECTION 2

LOW VALUE CHANGES

1 Low Value Change Notice

1.1 Where a Low Value Change is required by Project Co, it must submit a Project Co Change Notice to the Contractor.

1.2 Not used.

1.3 not used.

2 Project Co Change Notice

A Project Co Change Notice for a Low Value Change must:

2.1 state that it relates to a Low Value Change;

2.2 contain a description of the works and/or the change to the Works and/or the Services that Project Co requires including, if relevant, the applicable type of Low Value Change listed in the Catalogue; and

2.3 if there is no applicable type of change listed in the Catalogue, specify the time period within which Project Co requires the Change to be implemented.

3 Contractor Response and Project Co Confirmation

Within three (3) Business Days of receipt of a Project Co Change Notice for a Low Value Change, the Contractor must notify Project Co of:

3.1 the cost of implementing the required Low Value Change; and

3.2 the time period for implementing the Low Value Change,

in each case in accordance with paragraph 4 of this Section 2 (*Low Value Changes*).

4 Cost and Timing

4.1 If the Low Value Change is of a type listed in the Catalogue, the cost of carrying out that Low Value Change shall not exceed the relevant Catalogue Price and the time period for implementing the Low Value Change shall not exceed the relevant time specified in the Catalogue.

4.2 If the Low Value Change is not of a type that is listed in the Catalogue, the cost of carrying out that Low Value Change shall be calculated on the basis that:

4.2.1 wherever practicable the Low Value Change will be carried out by an existing on-site and suitably qualified employee of the Contractor or a Contractor Party and in that case, the Contractor may not charge for labour. Where there is no such suitably qualified on-site employee reasonably available to carry out the Low Value Change, the cost of the labour element will be calculated in accordance with the Small Works and Services Rates or, where such rates are not applicable, in accordance with rates which are fair and reasonable; and

4.2.2 the materials element will be charged at the cost of materials to the Contractor or to the Contractor Party carrying out the work (net of all

discounts) and there shall be no management fee, margin, overhead, contingency or other cost applied in relation thereto.

4.3 Other than the costs referred to in paragraphs 4.1 and 4.2 of this Section 2 (*Low Value Changes*) the Contractor may not charge Project Co for processing, implementing or managing a Low Value Change.

5 Project Co objection

Project Co may object in writing within seven (7) Business Days of receipt of the Contractor's notice pursuant to paragraph 3 of this Section 2 (*Low Value Changes*), to any part of that notice and in that event the parties shall act reasonably to endeavour to agree as soon as practicable how and when the Low Value Change is to be implemented, which may include the Project Co withdrawing Project Co Notice of Change.

6 Implementation

6.1 Contractor must implement a required Low Value Change so as to minimise any inconvenience to the Board or Project Co and, subject to paragraph 10.2 of this Section 2 (*Low Value Changes*), within the timescale specified in the notice given by the Contractor pursuant to paragraph 3 of this Section 2 (*Low Value Changes*) (or agreed by the parties pursuant to paragraph 5 of this Section 2 (*Low Value Changes*)).

6.2 Contractor shall notify Project Co when it considers that the Low Value Change has been completed.

6.3 If the Contractor:

6.3.1 fails to give a notice to Project Co in accordance with paragraph 3 of this Section 2 (*Low Value Changes*) within thirteen (13) Business Days of the date of Project Co Change Notice; or

6.3.2 gives a notice pursuant to paragraph 3 of this Section 2 (*Low Value Changes*) to which Project Co has objected pursuant to paragraph 5 of this Section 2 (*Low Value Changes*) on any ground other than the cost of the Low Value Change, the parties have not reached agreement as to how the Low Value Change is to be implemented and the objection has not been referred to the Dispute Resolution Procedure; or

6.3.3 gives a notice pursuant to paragraph 3 of this Section 2 (*Low Value Changes*) to which Project Co does not object pursuant to paragraph 5 but then fails to fully implement the Low Value Change within ten (10) Business Days after the timescale specified in that notice or agreed in accordance with paragraph 5 of this Section 2 (*Low Value Changes*),

then, subject to paragraph 10.3 of this Section 2 (*Low Value Changes*), Project Co may notify the Contractor that the Low Value Change Notice is withdrawn and, following such notification, may procure the implementation of the Low Value Change without further recourse to the Contractor, but Project Co must ensure that the Low Value Change is carried out in accordance with Good Industry Practice and to the standards that would have applied to the Contractor if it had implemented the Low Value Change.

7 Payment

Unless Project Co notifies the Contractor within seven (7) Business Days of receipt of a notice from the Contractor pursuant to paragraph 6.2 above that the Low Value Change has not been implemented to its reasonable satisfaction:

7.1 the Contractor shall, where the Low Value Change is implemented prior to the

Operational Term, issue an invoice in respect of the costs of the Low Value Change, which, subject to Clause 75 (*Overriding Entitlements*) Project Co must pay within thirty (30) Business Days of receipt; or

7.2 not used.

8 Update of Catalogue and Small Works and Services Rates

8.1 From the Commencement Date the Catalogue shall be that set out in Part 1 of Appendix 1 to this Schedule Part 16 (*Change Protocol*) and the Small Works and Services Rates shall be those set out in Part 2 of Appendix 1 to this Schedule Part 16 (*Change Protocol*).

8.2 Subject to paragraph 8.3.2 of this Section 2 (*Low Value Changes*), the unit prices and the Small Works and Services Rates set out in the Catalogue and the Small Works and Services Rates shall be index linked on each anniversary of the Commencement Date for the change in RPI since the Commencement Date or, after the first Catalogue Review Date, since the most recent Catalogue Review Date.

8.3 Until the Actual Completion Date, on the date which is twenty two (22) Business Days before each Catalogue Review Date, the Contractor must provide Project Co with:

8.3.1 a revised and updated Catalogue which:

(a) includes in the Catalogue unit prices for any types of Low Value Changes which have occurred and which the parties consider are reasonably likely to reoccur during the life of the Project and any other types of Low Value Changes as the parties may agree; and

(b) includes time periods for the carrying out of each listed type of Low Value Change; and

8.3.2 updated Small Works and Services Rates.

The unit prices and Small Works and Services Rates will be for the ensuing three-year period following the Catalogue Review Date. The unit prices must represent good value for money having regard to:

(a) prices prevailing for similar items in the market at the time; and

(b) paragraph 4.2 of this Section 2 (*Low Value Changes*).

The Small Works and Services Rates must provide value for money with reference to rates prevailing for similar services in the market at the time.

8.4 Within twelve (12) Business Days of the submission by the Contractor of the revised and updated Catalogue and Small Works and Services Rates pursuant to paragraph 8.3 of this Section 2 (*Low Value Changes*), Project Co shall confirm in writing whether or not it agrees (taking into consideration the decision of the Board under the equivalent provision of the Project Agreement) that the revised and the updated Catalogue shall constitute the Catalogue and the updated Small Works and Services Rates shall constitute the Small Works and Services Rates for the purposes of this Agreement from the relevant Catalogue Review Date;

8.5 If Project Co does not confirm to the Contractor that it agrees with the revised and updated Catalogue and/or Small Works and Services Rates provided by the Contractor pursuant to paragraph 8.3 of this Section 2 (*Low Value Changes*), the parties shall meet and endeavour, in good faith, to agree any amendments to the Catalogue and/or Small Works and Services Rates. Any dispute in relation to this paragraph 8 may be referred by either party to the Dispute Resolution Procedure.

The revised and updated Catalogue and revised and updated Small Works and Services Rates with such amendments as are agreed by the parties or determined under the Dispute Resolution Procedure shall constitute the Catalogue and the Small Works and Services Rates for the purposes of this Agreement from the relevant Catalogue Review Date.

9 Documentation and Monitoring

9.1 not used.

9.2 No changes shall be made to this Agreement as a result of a Low Value Change, unless otherwise agreed between the parties.

9.3 not used.

9.4 Contractor shall keep a record of all Low Value Changes processed, completed and outstanding and shall provide Project Co with a copy of that record whenever reasonably required by Project Co.

10 Disputes

10.1 Any dispute concerning any matter referred to in this Section 2 (*Low Value Changes*) may be referred by either party to the Dispute Resolution Procedure.

10.2 Contractor shall not be obliged to implement the Low Value Change until any dispute has been determined except that where such dispute concerns only the cost of a Low Value Change, unless Project Co otherwise directs, the Contractor must continue to carry out or implement the Low Value Change within the prescribed timescale notwithstanding the dispute.

10.3 Project Co is not entitled to withdraw a Project Co Change Notice and procure implementation of a Low Value Change in respect of which there is a dispute that has been referred to the Dispute Resolution Procedure, unless that dispute has been determined in its favour and the Contractor has not confirmed to Project Co in writing within three (3) Business Days of the date of the determination that it will implement and carry out the Low Value Change in accordance with the determination.

SECTION 3

MEDIUM VALUE CHANGES

1 Medium Value Changes

1.1 If Project Co requires a Medium Value Change, it must serve a Project Co Change Notice on the Contractor in accordance with paragraph 2 (*Medium Value Change Notice*) of this Section 3 *(Medium Value Changes)*.

1.2 the Contractor shall be entitled to refuse a Medium Value Change that:

1.2.1 requires the Works to be performed in a way that infringes any law or is inconsistent with Good Industry Practice;

1.2.2 would cause any Necessary Consent to be revoked (or would require a new consent to be obtained or any existing Necessary Consent to be amended which, after using reasonable efforts, the Contractor has been unable to obtain);

1.2.3 would materially and adversely affect the Contractor's ability to deliver the Works (except those Works which have been specified as requiring to be amended in Project Co Change Notice) in a manner not compensated for pursuant to this Section 3 (*Medium Value Changes*);

1.2.4 would materially and adversely affect the health and safety of any person;

1.2.5 would, if implemented, materially and adversely change the nature of the Project (including its risk profile); or

1.2.6 the Board or Project Co does not have the legal power or capacity to require implementation of.

2 Medium Value Change Notice

2.1 A Project Co Change Notice for a Medium Value Change must:

2.1.1 state that it refers to a Medium Value Change;

2.1.2 set out the change in the Works or Services or the additional works or services required in sufficient detail to enable the Contractor to calculate and provide the Estimated Change in Project Costs in accordance with paragraph 3 (*Contractor's Estimate*) of this Section 3 (*Medium Value Changes*);

2.1.3 not used; and

2.1.4 set out the timing of the additional works or services required by Project Co.

2.2 Within thirteen (13) Business Days of receipt of the Medium Value Change Notice, the Contractor must notify Project Co in writing:

2.2.1 whether it considers that it is entitled to refuse the Medium Value Change on any of the grounds set out in paragraphs 1.2.1 to 1.2.6 of this Section 3;

2.2.2 when it will provide the Estimate to Project Co bearing in mind the requirement in paragraph 7.2.2 of this Section 3; and

2.2.3 its estimate of the Third Party Costs that it will incur to prepare the Estimate.

2.3 If the Contractor notifies Project Co that it considers that it is entitled to refuse the Medium Value Change on one or more of the grounds set out in paragraphs 1.2.1 to 1.2.6 of this Section 3, then unless the parties otherwise agree, Project Co shall be deemed to have withdrawn Project Co Notice of Change if it has not referred the matter to the Dispute Resolution Procedure within twenty two (22) Business Days of receipt of the Contractor's notice.

2.4 If Project Co considers that the Contractor's proposed time for providing the Estimate is not reasonable, the parties shall endeavour to agree the time, failing which the matter may be referred to the Dispute Resolution Procedure.

2.5 If Project Co considers that the the Contractor's estimate of Third Party Costs to prepare the Estimate is not reasonable, the parties shall endeavour to agree the same, failing which the matter may be referred to the Dispute Resolution Procedure.

2.6 If any matter is referred to the Dispute Resolution Procedure pursuant to paragraph 2 (*Medium Value Change Notice*) of this Section 3 (*Medium Value Changes*), the time for the Contractor to provide the Estimate shall be counted from the date of determination of that dispute if the dispute is determined in the Contractor's favour.

3 Contractor's Estimate

As soon as reasonably practicable and in any event within the time period agreed or determined pursuant to paragraph 2.4 of this Section 3, the Contractor shall deliver to Project Co the Estimate.

The Estimate must contain:

3.1 a detailed timetable for implementation of the Medium Value Change;

3.2 any requirement for relief from compliance with obligations, including the obligations of the Contractor to achieve the Actual Completion Date by the Completion Date and to meet the requirements set out in the Board's Construction Requirements and/or the Service Level Specification during the implementation of the Medium Value Change;

3.3 an outline of the proposed design solution and design, including an appropriate analysis/risk appraisal and, to the extent relevant, the impact on whole life costings;

3.4 any impact on the provision of the Works;

3.5 a value for money justification for any proposed change to the quality of the works or the services comprised in the Medium Value Change as compared to the Works;

3.6 any amendment required to this Agreement as a result of the Medium Value Change;

3.7 any Estimated Change in Project Costs that results from the Medium Value Change;

3.8 any Capital Expenditure that is required or no longer required as a result of the Medium Value Change;

3.9 amendments to existing Necessary Consents that are required;

3.10 a payment schedule for any Capital Expenditure required to implement the Change, based on milestones where relevant;

3.11 costs and details of (i) any other approvals required and/or due diligence permitted pursuant to paragraph 12 of this Section 3 (*Medium Value Changes*); and (ii) any Third Party Costs;

3.12 the method of implementation and the proposed method of certification of any construction aspects of the Medium Value Change, if not covered by the procedures specified in Clause 14 (*Programme and Dates for Completion*); and

3.13 any other information requested by Project Co in Project Co Change Notice.

together the "**Estimate**"

4 Costing of the Estimate

In calculating the Estimated Change in Project Costs and/or the Capital Expenditure for the purposes of the Estimate, the Contractor shall apply the following principles wherever applicable:

4.1 unless Project Co's requirements for the Medium Value Change specify a different quality as compared to the Works:

4.1.1 the unit cost of any construction or installation works or associated preliminaries (excluding any temporary or demolition works, professional fees, contingencies, overheads and profit margins) required to implement the Medium Value Change is the equivalent unit rate set out in Part 1 (*Unit Cost for Construction or Installation Costs*) of Appendix 2 of this Schedule Part 16 (*Change Protocol*), uplifted using the BIS Pubsec Index for construction cost inflation in the period between the Commencement Date and the date the Medium Value Change is to be commenced;

4.1.2 not used;

4.1.3 not used

4.2 any professional fees, contingencies, overheads and/or profit margins to be charged by any consultant, sub-contractor or supplier in respect of construction and/or installation for the Medium Value Change are the equivalent rates set out in Part 3 (*Consultant, Sub-contractor or Supplier Fees*) of Appendix 2 of this Schedule Part 16 (*Change Protocol*) (index linked), or if the professional fees, contingencies, overheads and profit margins being charged by consultants, sub-contractors and/or suppliers in current market conditions have changed significantly from those set out in Part 3 (*Consultant, Sub-contractor or Supplier Fees*) of Appendix 2 of this Schedule Part 16 (*Change Protocol*) (index linked), such other rates as the parties agree or failing agreement as may be determined under the Dispute Resolution Procedure as being consistent with those charged in current market conditions;

4.3 not used;

4.4 other than as referred to in paragraphs 4.1 to 4.3 of this Section 3 (*Medium Value Changes*) to this Schedule Part 16 (*Change Protocol*) no charge shall be made in respect of the Contractor's time, or that of any Contractor Party spent processing, managing or monitoring the Medium Value Change (and no additional mark up or management fee shall be applied by Contractor); and

4.5 where aspects of the Medium Value Change are not addressed by paragraphs 4.1 to 4.4 of this Section 3 (*Medium Value Changes*), they shall be costed on a fair and reasonable basis reflecting the then current market rates.

5 Standards of provision of the Estimate

In providing the Estimate the Contractor must:

5.1 use reasonable endeavours to oblige its Sub-Contractors to minimise any increase in costs and maximise any reduction in costs;

5.2 demonstrate how any Capital Expenditure to be incurred or avoided is being measured in a cost effective manner, including showing that when such expenditure is incurred, reasonably foreseeable Changes in Law at that time have been taken into account; and

5.3 not used; and

5.4 provide written evidence of the Contractor's compliance with paragraphs 5.1 to 5.3 of this Section 3.

6 Determination of the Estimate

As soon as practicable after Project Co receives the Estimate, the parties shall discuss and endeavour to agree the contents of the Estimate. If the parties cannot agree on the contents of the Estimate, the matter may be referred by either party to the Dispute Resolution Procedure to determine if the Estimate represents a fair and reasonable approach to implementing the Medium Value Change in all respects. Contractor shall, if required by the project co, assist it in discussions (including by attending meetings) with the Board in relation to any Estimate.

7 Confirmation or Withdrawal of the Medium Value Change Notice

7.1 As soon as practicable after the contents of the Estimate have been agreed or otherwise determined pursuant to paragraph 6 of this Section 3, Project Co shall:

7.1.1 confirm in writing to the Contractor the Estimate (as modified); or

7.1.2 withdraw Project Co Change Notice.

7.2 If, in any Contract Year, Project Co has either not confirmed an Estimate (as modified, if applicable) within twenty two (22) Business Days of the contents of the Estimate having been agreed or determined in accordance with the foregoing provisions of this Section 3 or has withdrawn a Project Co Change Notice for a Medium Value Change on three or more occasions, then subject to Clause 75 (*Overriding Entitlements*)Project Co shall pay to the Contractor on the third and each subsequent such occasion in that Contract Year the reasonable additional Third Party Costs incurred by the Contractor in preparing the Estimate provided that:

7.2.1 the Contractor has used all reasonable endeavours to submit a reasonably priced Estimate; and

7.2.2 the Contractor made available to Project Co, with the Estimate, a cost break down of Third Party Costs incurred by the Contractor to prepare the Estimate, which shall be consistent with the estimate of such costs approved by Project Co pursuant to paragraph 2.5 of this Section 3.

8 Implementation of the Medium Value Change

8.1 When Project Co has confirmed the Estimate in accordance with paragraph 7.1 of this Section 3, the Contractor shall, subject to the Contractor obtaining all new or amended Necessary Consents that are required and have not already been obtained, implement the required Medium Value Change in accordance with the Estimate. Where an extension of time has been agreed as part of the Estimate the Completion Date shall be extended as agreed in the Estimate.

8.2 the Contractor shall notify Project Co when it considers that the Medium Value Change has been completed.

8.3 If:

8.3.1 the Contractor fails to provide a response pursuant to paragraph 2.2 of this Section 3 within thirteen (13) Business Days of the date of the Medium Value Change Notice; or

8.3.2 the Contractor fails to provide an Estimate in accordance with paragraph 3 of this Section 3; or

8.3.3 Project Co has confirmed an Estimate but the Contractor fails to fully implement the Medium Value Change within ten (10) Business Days after the expiry of the time for implementing the Medium Value Change set out in the Estimate Low Value Change (as such time may be extended for any delay that is, or is equivalent to, a Delay Event).;

then, subject to paragraph 14.3 of this Section 3, Project Co may notify the Contractor that the Medium Value Change Notice is withdrawn and, following such notification, may procure the implementation of the Medium Value Change without further recourse to the Contractor, but Project Co must ensure that the Medium Value Change is carried out in accordance with Good Industry Practice and to the standards that would have applied to the Contractor if it had implemented the Medium Value Change.

9 Certification of the Medium Value Change

9.1 Where the Medium Value Change is implemented at the Facilities and/or the Retained Estate Handback Infrastructure before the Actual Completion Date, the procedure set out at Clause 17 (*Pre-Completion Commissioning and Completion*) shall apply to the Medium Value Change at the same time as it applies to the original Works.

9.2 Where the Medium Value Change is implemented at the Facilities after the Actual Completion Date and constitutes additional works, the procedure set out and agreed in the Estimate for certifying the completion of the Medium Value Change shall apply to determine whether the Medium Value Change has been completed appropriately.

10 Method of Payment of Project Co Contribution

10.1 the Contractor shall invoice Project Co for Capital Expenditure incurred by the Contractor to implement a Medium Value Change according to the payment schedule set out in the Estimate as referred to in paragraph 3.10.

10.2 Subject to Clause 75 (*Overriding Entitlements*) the Project Co shall make a payment to the Contractor within twenty five (25) Business Days of receipt by Project Co of invoices presented to Project Co (complete in all material respects) in accordance with paragraph 10.1 of this Section 3 accompanied by the relevant evidence (where applicable) that the relevant part of the Medium Value Change has been carried out.

11 Not used

12 Not used

13 Project Documentation

13.1 Save as expressly provided for in this Agreement, no changes to this Agreement shall be made as a result of a Medium Value Change.

13.2 the Contractor shall, no later than one (1) month following completion of a Medium Value Change, update the as-built drawings and the operating and maintenance manuals as necessary to reflect the Medium Value Change.

14 Disputes

14.1 Any dispute concerning any matter referred to in this Section 3 may be referred by either party to the Dispute Resolution Procedure under this Agreement.

14.2 Where a dispute concerning any matter referred to in this Section 3 is the same, or substantially the same as a dispute under Section 3 (Medium Value Change) of Schedule Part 16 (*Change Protocol*) of the Project Agreement (a **Common Medium Value Change Dispute**) and the dispute under the Project Agreement is, or has been, referred to the Dispute Resolution Procedure under the Project Agreement, the Contractor and Project Co shall be bound by the determination of the Common Medium Value Change Dispute under the Dispute Resolution Procedure under the Project Agreement. Project Co shall not be obliged to implement the Medium Value Change until the dispute has been determined.

14.3 Where there is a dispute under this Agreement in relation to a Common Medium Value Change Dispute, the Contractor shall not be obliged to implement the Medium Value Change until the dispute under the Project Agreement has been determined. The Project Co is not entitled to withdraw a Project Co Change Notice and procure implementation of a Medium Value Change in respect of which there is a dispute that has been referred to the Dispute Resolution Procedure, unless that dispute has been determined in its favour and Project Co has not confirmed to the Board in writing within five (5) Business Days of the date of the determination that it will implement and carry out the Medium Value Change in accordance with the determination.

14.4 Where Project Co notifies the Contractor that the dispute under the Project Agreement which is a Common Medium Value Change Dispute has been determined in favour of the Board, the Contractor shall be bound by the decision in favour of the Board and shall implement the Medium Value Change in accordance with the decision. The Contractor acknowledges the right of the Board to withdraw a Board Change Notice under the Project Agreement and Project Co's right to withdraw a Project Co Change Notice under this Agreement and procure implementation of a Medium Value Change in respect of which a dispute has been referred to the Dispute Resolution Procedure under the Project Agreement and has been determined in the Board's favour and the Contractor has not confirmed to Project Co in writing within three (3) Business Days of the date of the determination that it will implement and carry out the Medium Value Change in accordance with the determination.

SECTION 4

HIGH VALUE CHANGES

1 High Value Changes

1.1 If Project Co requires a High Value Change it must serve a Project Co Change Notice on the Contractor in accordance with paragraph 2 of this Section 4 (*High Value Changes*).

1.2 The Contractor shall be entitled to refuse a High Value Change that:

1.2.1 requires the Works to be performed in a way that infringes any law or is inconsistent with Good Industry Practice;

1.2.2 would cause any Necessary Consent to be revoked (or would require a new consent to be obtained to implement the relevant change in the Works which, after using reasonable efforts, the Contractor has been unable to obtain);

1.2.3 would materially and adversely affect the Contractor's ability to deliver the Works (except those Works which have been specified as requiring to be amended in the High Value Change Notice) in a manner not compensated pursuant to this Section 4 (*High Value Changes*);

1.2.4 would materially and adversely affect the health and safety of any person;

1.2.5 would, if implemented, materially and adversely change the nature of the Project (including its risk profile);

1.2.6 is the subject of a High Value Change Notice that cannot reasonably be complied with;

1.2.7 neither the Board nor Project Co have the legal power or capacity to require implementation of.

1.2.8 not used.

2 High Value Change Notice

2.1 A Project Co Change Notice for a High Value Change must:

2.1.1 state that is refers to a High Value Change;

2.1.2 set out the maximum available capital and/or revenue Project Co is able to commit to that High Value Change (the **"Target Cost"**);

2.1.3 identify any requirements of Project Co that must be satisfied as part of the High Value Change Proposal (the **"High Value Change Requirements"**); and

2.1.4 identify how Project Co will assess whether the High Value Change Stage 2 Submission offers it value for money.

2.2 The parties may agree written protocols with express reference to this Section 4 (*High Value Changes*) which explain or clarify any aspects of the High Value Change approval procedure set out in this Section 4 (*High Value Changes*) and such protocols shall be read as if incorporated into this Section 4 (*High Value Changes*) (including accelerated procedures with reduced requirements for High Value

Changes of relatively low values).

2.3 The parties must:

2.3.1 within three (3) Business Days of receipt by the Contractor of any High Value Change Notice, discuss and review the nature of the High Value Change, including a discussion as to which of the items set out in paragraph 3.4 of this Section 4 (*High Value Changes*) are appropriate to be included within the High Value Change Proposal; and

2.3.2 within three (3) Business Days of a High Value Change Proposal becoming a Stage 1 Approved Project, discuss and review the nature of the Stage 1 Approved Project, including a discussion as to which of the items set out in paragraph 4.3 of this Section 4 (*High Value Changes*) are appropriate to be included within the High Value Change Stage 2 Submission.

3 High Value Change Proposal

3.1 The Contractor must notify Project Co in writing as soon as practicable and in any event within thirteen (13) Business Days after having received Project Co Change Notice for a High Value Change if it considers that any of the circumstances set out in paragraphs 1.2.1 to 1.2.8 of this Section 4 (*High Value Changes*) apply. If no such notice is served, the Contractor must (within twenty eight (28) Business Days after having received Project Co Change Notice) either:

3.1.1 submit a High Value Change Proposal to Project Co; or

3.1.2 notify Project Co as to when the High Value Change Proposal will be provided to it (provided that the Contractor shall use all reasonable endeavours to obtain all the information that it requires, expeditiously).

3.2 If the Contractor notifies Project Co that it considers that one or more of the grounds set out in paragraphs 1.2.1 to 1.2.8 of this Section 4 (*High Value Changes*) apply, then unless the parties otherwise agree, Project Co shall be deemed to have withdrawn Project Co Notice of Change if it has not referred the matter to the Dispute Resolution Procedure within twenty two (22) Business Days of receipt of the Contractor's notice. If the matter is referred to the Dispute Resolution Procedure the time for the Contractor to provide the High Value Change Proposal shall be counted from the date of determination of that dispute if the dispute is determined in the Contractor's favour.

3.3 If Project Co considers that the Contractor's proposed time for providing the High Value Change Proposal is not reasonable, the parties shall endeavour to agree the time, failing which the matter may be referred to the Dispute Resolution Procedure.

3.4 Unless the Contractor has submitted a High Value Change Proposal in accordance with paragraph 3.1.1 of this Section 4 (*High Value Changes*), the Contractor must deliver to Project Co the High Value Change Proposal as soon as reasonably practicable and in any event within the time period agreed or determined pursuant to paragraph 3.3 of this Section 4 (*High Value Changes*). Unless the parties agree otherwise, a High Value Change Proposal will contain at least the following information in sufficient detail to enable Project Co to make an informed decision under paragraph 3.6 of this Section 4 (*High Value Changes*):

3.4.1 a description of the High Value Change, with evidence of how the High Value Change meets the High Value Change Requirements;

3.4.2 an outline of the proposed building solution and design including an appropriate analysis/risk appraisal of, in each case to the extent relevant (if at all), the preferred investment solution contemplated in terms of new

build, refurbishment, whole life costings;

3.4.3 not used;

3.4.4 details of the third party activity likely to be required by the Contractor in developing a High Value Change Stage 2 Submission together with a budget (or budgets) for relative Third Party Costs;

3.4.5 an estimated programme for submission of the High Value Change Stage 2 Submission and for the implementation of the High Value Change;

3.4.6 any requirement for relief from compliance with obligations, including the obligations of the Contractor to achieve the Actual Completion Date by the Completion Date and meet the requirements set out in the Board's Construction Requirements and/or the Service Level Specification during the implementation of the High Value Change;

3.4.7 any impact on the provision of the Works;

3.4.8 any amendment required to this Agreement as a result of the High Value Change;

3.4.9 any Estimated Change in Project Costs that results from the High Value Change;

3.4.10 an outline of how the Contractor proposes to finance any Capital Expenditure required for the High Value Change;

3.4.11 the Contractor's suggested payment schedule for any Capital Expenditure to be incurred in implementing the Change that is to be borne by Project Co, based on milestones where relevant;

3.4.12 any new Necessary Consents and/or any amendments to existing Necessary Consents which are required;

3.4.13 costs and details of any other approvals required or due diligence permitted pursuant to paragraph 14 of this Section 4 (*High Value Changes*);

3.4.14 the proposed method of certification of any construction aspects of the Works required by the proposed High Value Change if not covered by the procedures specified in Clause 17 (*Pre-Completion Commissioning and Completion*); and

3.4.15 a value for money assessment explaining why the Contractor's proposals represent value for money taking into account both the proposed Capital Cost and Whole Life Cost.

3.5 Liaison between Project Co, the Contractor, the Board and relevant end users

In developing a High Value Change Proposal the Contractor must liaise with the Board and Project Co and relevant end users (being such persons or organisations as the Contractor in consultation with the Board and Project Co considers appropriate). The Board and Project Co must provide the Contractor with such information about their requirements as the Contractor reasonably requires and must assist the Contractor in the review of any draft designs in relation to the High Value Change Proposal. Any and all information and other input or feedback provided by the Board or Project Co to the Contractor, unless expressly stated otherwise by the Board or Project Co, will be without warranty and will be provided without prejudice to Project Co's rights under this Section 4 (*High Value Changes*).

3.6 Consideration of a High Value Change Proposal by Project Co

Project Co will consider in good faith each High Value Change Proposal put forward by the Contractor and Project Co will not unreasonably withhold or delay its consent to a High Value Change Proposal. If, acting reasonably, Project Co finds that any material aspects of the High Value Change Proposal are unsatisfactory to it, it shall notify the Contractor of the same and offer reasonable assistance to the Contractor to enable it to revise and resubmit the High Value Change Proposal as soon as reasonably practicable. The Project Co shall be acting reasonably in withholding or delaying consent where the Board is withholding or delaying consent under the equivalent provision in the Project Agreement.

3.7 Project Co response to a High Value Change Proposal

If Project Co approves a High Value Change Proposal (including any revised High Value Change Proposal resubmitted pursuant to paragraph 3.5 of this Section 4 (*High Value Changes*)), then it shall be a **"Stage 1 Approved Project"** or be referred to as having received **"Stage 1 Approval"**, as the context requires.

3.8 Contractor not entitled to dispute non-approval

the Contractor shall not be entitled to refer any dispute concerning any person's failure to approve a High Value Change Proposal to the Dispute Resolution Procedure.

4 Stage 2 Submission

4.1 Development of a High Value Change Stage 2 Submission

4.1.1 Within eight (8) Business Days of a High Value Change Proposal having become a Stage 1 Approved Project, the parties shall seek to agree the time period within which the Contractor must develop the Stage 1 Approved Project into a detailed submission (the **"High Value Change Stage 2 Submission"**). If the parties are unable to agree a reasonable time period for such submission any dispute may be referred to the Dispute Resolution Procedure.

4.1.2 Following agreement or determination of what is an appropriate time period for submission by the Contractor of the High Value Change Stage 2 Submission pursuant to paragraph 4.1.1 of this Section 4 (*High Value Changes*), the Contractor shall proceed regularly and diligently to produce and submit the same to Project Co within the agreed or determined time period.

4.2 Liaison between Project Co, the Contractor, the Board and relevant end users

In developing a High Value Change Stage 2 Submission the Contractor must continue to liaise with the Board and Project Co and relevant end users (being such persons or organisations as the Board and/or Project Co in consultation with the Contractor considers appropriate). The Board and Project Co must provide the Contractor with such information as to their requirements as is reasonably necessary to enable the Contractor to submit a full and complete High Value Change Stage 2 Submission and any such other information as the Contractor may reasonably require and must assist the Contractor in the review of any draft designs in relation to the Stage 1 Approved Project and in the development of other aspects of the High Value Change Stage 2 Submission (but not where this would involve the Board and/or Project Co incurring additional material expense). Any and all information and other input or feedback provided by the Board and/or Project Co to the Contractor will be without warranty and will be provided without prejudice to Project Co's rights under this Section 4 (*High Value Changes*).

4.3 Content requirements in relation to a High Value Change Stage 2 Submission

Save where the parties agree otherwise, in relation to the relevant Stage 1 Approved Project, the Contractor shall procure that a High Value Change Stage 2 Submission includes (but not be limited to):

4.3.1 draft(s) of the relevant Project Document(s) identifying (if relevant) any material changes or amendments proposed in respect of the relevant Stage 1 Approved Project, together with the reasons for any such changes or amendments proposed and including full details of which provisions of the relevant Project Documents will apply to the High Value Change so that it is implemented in equivalent manner and to an equivalent standard as required in respect of the Works and/or Services as appropriate;

4.3.2 detailed design solutions (to RIBA Level D);

4.3.3 appropriate plans and drawings;

4.3.4 relevant detailed planning permissions and any other relevant planning approvals and Necessary Consents (or such lesser confirmation or information in relation to planning as may be agreed with Project Co);

4.3.5 not used;

4.3.6 an explanation (together with appropriate supporting evidence) as to why the High Value Change Stage 2 Submission meets the Approval Criteria (as defined in paragraph 7 of this Section 4 (*High Value Changes*));

4.3.7 not used;

4.3.8 the proposed method of certification of any construction aspects of the High Value Change, if not covered by the procedures specified in Clause 17 (*Pre-Completion Commissioning and Completion*);

4.3.9 a value for money assessment explaining why the Contractor's proposals represent value for money taking into account both the proposed Capital Cost and Whole Life Cost;

4.3.10 a timetable and method statement setting out how the relevant High Value Change will be delivered, which shall include (but not be limited to) in so far as relevant:

(a) proposals for the effective management of the building programme;

(b) details of any relevant Interface Proposals;

(c) not used;

(d) details of the Sub-Contractors together with evidence and explanation of the value testing undertaken by the Contractor in relation to the High Value Change;

(e) a completed risk register showing the potential risks identified in relation to the delivery of the High Value Change the occurrence of which are capable of adversely affecting the time for completion, cost and/or quality of the project, the probability of such risks occurring and a financial estimate of the most likely consequences of each risk occurring together with the prioritisation of all

continuing risks and an action plan in respect of, and risk owners for, all risks prioritised as serious risks;

4.3.11 any surveys and investigations and associated reports that are reasonably necessary to ascertain (in relation to Changes involving the construction of additional buildings) information as to the nature, location and condition of the relevant land (including hydrological, geological, geotechnical and sub-surface conditions) together with information relating to archaeological finds, areas of archaeological, scientific or natural interest and (in relation to the refurbishment of any existing buildings) information on the condition and quality of existing structures and, in particular, the presence of any latent defects.

Co-operation of Project Co

4.4 Project Co will co-operate with the Contractor in relation to any High Value Change Stage 2 Submission being developed by the Contractor, including (without limitation) promptly, after receipt from the Board, providing:

4.4.1 written confirmation of the Target Cost and/or High Value Change Requirements and any change to such Target Cost and/or High Value Change Requirements; and

4.4.2 any information reasonably required by the Contractor to enable it to satisfy the requirements of paragraph 4.3 of this Section 4 (*High Value Changes*).

5 Time periods for approval

5.1 Each High Value Change Proposal and each High Value Change Stage 2 Submission shall be valid for a period of four (4) months from the date of its submission by the Contractor.

5.2 If by the end of the four (4) month period referred to in paragraph 5.1 of this Section 4 (*High Value Changes*) Project Co has not:

5.2.1 in relation to a High Value Change Proposal, approved or rejected that High Value Change Proposal in accordance with the procedures set out in this Section 4 (*High Value Changes*):

(a) the Contractor shall be entitled to withdraw the High Value Change Proposal; and

(b) the Contractor shall not be entitled to any costs relating to the High Value Change Proposal unless Project Co has either not responded to the High Value Change Proposal and/or is in material breach of its obligations in paragraph 3 and/or paragraph 4.4 of this Section 4 in which case paragraph 8.5 of this Section 4 (*High Value Changes*) shall apply. This paragraph 5.2.1 is subject to Clause 75 (*Overriding Entitlements*);

5.2.2 in relation to a High Value Change Stage 2 Submission, approved or rejected that High Value Change Stage 2 Submission in accordance with the procedures set out in this Section 4 (*High Value Changes*) (or has not given any notification of Project Co's response to the High Value Change Stage 2 Submission or has given written notice to the Contractor withdrawing or cancelling the High Value Change to which the High Value Change Stage 2 Submission relates) then the High Value Change Stage 2 Submission shall be deemed to have been improperly rejected by Project Co and paragraph 8.5 shall apply.

6 Changes to the High Value Change Requirements or Approval Criteria

6.1 If the High Value Change Requirements or Approval Criteria are subject to any material variation in relation to a High Value Change by Project Co after the High Value Change Proposal has been submitted then:

6.1.1 the Contractor and Project Co shall negotiate in good faith as to the implications on the High Value Change Proposal or High Value Change Stage 2 Submission (as the case may be) and shall seek to agree changes thereto to accommodate the variation (including any change to the Target Cost);

6.1.2 if agreement has not been reached pursuant to paragraph 6.1.1 of this Section 4 (*High Value Changes*) within twenty two (22) Business Days (or such longer period as the parties may agree) then:

(a) the Contractor shall be entitled by notice in writing to Project Co to withdraw the High Value Change Proposal or the High Value Change Stage 2 Submission (as the case may be); and

(b) Project Co shall not be entitled to procure the High Value Change without issuing a new Project Co Change Notice for the High Value Change and complying with the procedure in this Section 4 (*High Value Changes*) in relation to that High Value Change.

6.1.3 Project Co may, at any time, give notice in writing to the Contractor that it proposes to cancel a High Value Change without completing the process set out in this Section 4 (*High Value Changes*).

7 Approval Criteria

7.1 For the purposes of this Section 4 (*High Value Changes*), Approval Criteria means the criteria against which any Stage 1 Approved Project is to be judged by Project Co in determining whether it achieves Stage 2 Approval. The criteria are:

7.1.1 whether the costs of the Stage 1 Approved Project are within the Target Cost notified to the Contractor by Project Co;

7.1.2 whether it has been demonstrated that the Stage 1 Approved Project provides value for money assessed in accordance with the measures identified by Project Co in accordance with paragraph 2.1.4 of this Section 4 (*High Value Changes*);

7.1.3 whether Project Co, acting reasonably, is satisfied that the High Value Change Stage 2 Submission meets the High Value Change Requirements;

7.1.4 whether any material changes or amendments to the relevant Project Document(s) as detailed pursuant to paragraph 4.3.1 of this Section 4 (*High Value Changes*) are acceptable to Project Co, acting reasonably; and

7.1.5 whether the High Value Change Stage 2 Submission contains all the information required pursuant to paragraph 4.3 of this Section 4 (*High Value Changes*) (or as otherwise agreed by the parties).

8 Submission of the High Value Change Stage 2 Submission to Project Co and consideration of that submission by Project Co

8.1 Project Co will consider in good faith High Value Change Stage 2 Submissions submitted by the Contractor and Project Co will not unreasonably withhold or delay its

consent to a High Value Change Stage 2 Submission. The Project Co shall be reasonably withholding or delaying consent where the Board is withholding or delaying consent under the equivalent provision of the project Agreement. Project Co is entitled to call for such reasonable information and assistance as it considers appropriate to enable it to decide whether the High Value Change Stage 2 Submission meets the Approval Criteria. the Contractor must reply promptly to all such requests for further information and assistance.

8.2 As soon as reasonably practicable after the submission to it of a High Value Change Stage 2 Submission (including any revised High Value Change Stage 2 Submission re-submitted by the Contractor) and receipt of the Board's notice under the equivalent provision in the Project Agreement Project Co must give written notice of whether it:

8.2.1 approves the relevant Stage 1 Approved Project (in which case the Stage 1 Approved Project will be referred to as having received **"Stage 2 Approval"** or as being a **"Stage 2 Approved Project"** or an "Approved Project" as the context requires); or

8.2.2 rejects the Stage 1 Approved Project:

(a) on the ground that the High Value Change Stage 2 Submission in relation to the relevant Stage 1 Approved Project has failed to meet one or more of the Approval Criteria (except as referred to in paragraph xxx8.2.2(b)(i) or paragraph 8.2.2(b)(ii)), in which case (subject to resubmission under paragraph 8.2.3) paragraph 8.3 shall apply;

(b)

(i) because, as a result of any change to the Target Cost referred to in paragraph 2.1.2, the Stage 1 Approved Project is not in fact Affordable despite the High Value Change Stage 2 Submission being within the Target Cost notified by Project Co pursuant to paragraph 2.1.2 of this Section 4 (*High Value Changes*); or

(ii) because the Contractor has failed to meet one or more of the Approval Criteria and the sole reason for that failure is that any Necessary Consent identified by the Contractor (in compliance with paragraph 3.4.12 of this Section 4 (*High Value Changes*)) has not been obtained; or

(iii) otherwise on grounds other than those set out in paragraphs 8.2.2(a), 8.2.2(b)(i) and 8.2.2(b)(ii) of this Section 4 (*High Value Changes*),

in which case paragraph 8.5 shall apply.

8.2.3 If Project Co rejects the High Value Change Stage 2 Submission on the grounds set out in paragraph 8.2.2(a) Project Co and the Contractor will work together (and with the Board if required by the Project Co) to address the reasons for such failure and attempt in good faith to produce a revised High Value Change Stage 2 Submission for the Contractor to re-submit to Project Co.

8.2.4 If:

(a) a resubmitted High Value Change Stage 2 Submission is rejected by Project Co on the ground set out in paragraph 8.2.2(a) (subject to paragraphs 16.3 to 16.4 (if applicable) of this Section 4 (*High*

Value Changes)); or

(b) no resubmission of the High Value Change Stage 2 Submission is made within twenty eight (28) Business Days of the date of the notice of rejection (or such longer period as the parties may agree),

then the relevant Stage 1 Approved Project shall be treated as having been properly rejected, the provisions of paragraph 8.3 of this Section 4 (*High Value Changes*) shall apply and neither Project Co nor the Contractor will have any further obligations in relation to the relevant High Value Change referred to in the High Value Change Stage 2 Submission.

If a High Value Change Stage 2 Submission is properly rejected by Project Co

8.3 Where this paragraph 8.3 applies (as set out in paragraph 8.2.2(a), paragraph 8.2.4 and paragraph 16.4.2 of this Section 4 (*High Value Changes*)) Project Co shall not be required to reimburse or compensate the Contractor in respect of any costs relating to the High Value Change.

8.4 If:

8.4.1 the Contractor fails to provide a response to a Project Co Change Notice in accordance with paragraph 3.1 of this Section 4 (*High Value Changes*); or

8.4.2 (where applicable) the Contractor fails to provide a High Value Change Proposal in accordance with paragraph 3.4 of this Section 4 (*High Value Changes*); or

8.4.3 the Contractor fails to submit a High Value Change Stage 2 Submission in accordance with paragraph 4.1.2 of Section 4 (*High Value Changes*); or

8.4.4 Project Co has validly rejected a High Value Change Stage 2 Submission in accordance with paragraph 8.2 and the matter has not been referred to the Dispute Resolution Procedure or any such dispute has been determined as described in paragraph 16.4.2 of this Section 4 (*High Value Changes*),

then, subject to paragraph 17 of this Section 4 (*High Value Changes*), Project Co may notify the Contractor that the High Value Change Notice is withdrawn and, following such notification, the Board may procure the implementation of the High Value Change without further recourse to Project Co or the Contractor and the Contractor shall permit the Board or any person appointed by the Board to implement such High Value Change, but the Board must ensure that the High Value Change is carried out in accordance with Good Industry Practice and to the standards that would have applied to the Contractor if it had implemented the High Value Change.

If a High Value Change Stage 2 Submission is improperly rejected by Project Co

8.5 Subject to Clauses 75 (*Overriding Entitlements*), where this paragraph 8.5 applies (as set out in paragraph 5.2.1(b), paragraph 5.2.2 paragraph 8.2.2(b) and paragraph 16.4.1)), Third Party Costs incurred by the Contractor to prepare the High Value Change Proposal and Stage 2 Submission, which shall be in accordance with the activities and budget referred to in paragraph 3.4.4 of this Section 4 (*High Value Changes*), in relation to the relevant High Value Change will be paid by Project Co within twenty (20) Business Days of the date on which the Contractor receives written notice of the rejection or the date of the deemed rejection (as the case may be.

9 Information and notifications by Project Co to the Contractor and cooperation of

Project Co

9.1 Project Co must notify the Contractor as soon as it becomes aware of any matter which may have a reasonably foreseeable material adverse effect on the viability of any High Value Change including any:

9.1.1 planning issues likely to cause a material delay in the anticipated programme for the High Value Change or material cost increases; and

9.1.2 changes to funding which the Board and/or Project Co receives or to the way in which funding may be applied, either or both of which may affect whether a High Value Change is Affordable.

9.2 Project Co shall provide reasonable assistance to the Contractor in relation to the procurement by the Contractor of all relevant Necessary Consents. The Contractor shall be solely responsible for obtaining all Necessary Consents.

10 Not used

11 Implementation of the High Value Change

The Contractor must implement any High Value Change approved by Project Co so as to minimise any inconvenience to the Board and/or Project Co and to the provision of Board Services and in accordance with the Approved Project. Where an extension of time has been agreed as part of the Stage 2 Approval the Completion Date shall be extended as agreed in the Approved Project.

12 Method of Payment of Project Co Contribution

12.1 This paragraph 12 shall apply where Capital Expenditure for an Approved Project is to be funded in whole or part by Project Co.

12.2 the Contractor shall invoice Project Co for Capital Expenditure incurred by the Contractor to implement a High Value Change that is to be borne by Project Co according to the payment schedule set out in the High Value Change Stage 2 Submission as referred to in paragraph 3.4.11 of this Section 4.

12.3 Project Co shall make a payment to the Contractor within twenty five (25) Business Days of receipt by Project Co of invoices presented to Project Co (complete in all material respects) in accordance with paragraph 12.2 of this Section 4, accompanied by the relevant evidence (where applicable) that the relevant part of the High Value Change has been carried out.

13 Not used

14 Not Used

15 Project Documentation

15.1 Save as expressly provided for in this Agreement no changes shall be made to this Agreement as a result of a High Value Change.

15.2 the Contractor shall, on completion of the Change, update the as-built drawings and the operating and maintenance manuals as necessary to reflect the High Value Change.

16 Disputes

16.1 Except as otherwise expressly provided, any dispute concerning any matter referred

to in this Section 4 (*High Value Changes*) may be referred by either party to the Dispute Resolution Procedure.

16.2 Project Co shall not be entitled to approve a High Value Change Proposal or a High Value Change Stage 2 Submission that is the subject of a dispute until the dispute has been determined.

16.3 If Project Co rejects a High Value Change Stage 2 Submission pursuant to the provisions of paragraph 8.2.2(a) of this Section 4, the Contractor shall be entitled to refer the matter for consideration under the Dispute Resolution Procedure within eight (8) Business Days after receiving written notice of Project Co's decision.

16.4 If, following a referral to the Dispute Resolution Procedure, it is agreed or determined:

16.4.1 that the High Value Change rejected by Project Co pursuant to paragraph 8.2.2(a) of this Section 4 met the Approval Criteria Project Co shall either:

(a) declare that the relevant High Value Change has received Stage 2 Approval and that High Value Change shall proceed; or

(b) declare that its rejection of the relevant High Value Change be treated as an improper rejection and that the provisions of paragraph 8.2.2(a) of this Section 4 (*High Value Changes*) shall apply.

16.4.2 the High Value Change did not meet the Approval Criteria, save in one of the respects referred to in paragraphs 8.2.2(b)(i) or 8.2.2(b)(ii) the provisions of paragraph 8.3 of this Section 4 (*High Value Changes*) shall apply.

16.5 Where a dispute concerning any matter referred to in Section 4 (*High Value Changes*) of Schedule Part 16 (*Change Protocol*) of the Project Agreement (a **Common High Value Change Dispute**) and the dispute under the Project Agreement is referred to, or has been referred to, Dispute Resolution Procedure under the Project Agreement, the Contractor and Project Co shall be bound by the determination of the Common High Value Change Dispute under the Dispute Resolution Procedure..

17 Where Project Co notifies the Contractor that the dispute under the Project Agreement which is a Common High Value Dispute has been determined in favour of the Board, the Contractor shall be bound by the decision of any Common High Value Change Dispute in favour of the Board and shall implement the High Value Change. The Contractor acknowledges the right of the Board to withdraw a Board Change Notice and procure implementation of a High Value Change in respect of which a dispute has been referred to the Dispute Resolution Procedure, and has been determined in the Board's favour if the Contractor has not confirmed to Project Co in writing within three (3) Business Days of the date of the determination that it will comply with its obligations under this Section 4 in accordance with the determination under the Dispute Resolution Procedure.

18 Implementation of a High Value Change by the Board, or a person appointed by the Board, pursuant to Paragraph 8.4 or Paragraph 17 of Section 4 of Schedule Part 16 (*Change Protocol*) shall not be a Delay Event, nor a Compensation Event, nor a Relief Event and Clause 19B shall apply notwithstanding that the High Value Change has been implemented by the Board or a person appointed by the Board.

SECTION 5

CONTRACTOR CHANGES

1 If the Contractor wishes to introduce a Contractor Change, it shall serve a notice containing the information required pursuant to paragraph 2 of this Section 5 (*Contractor Changes*) (a " *Contractor Notice of Change*") on Project Co.

2 A Contractor Notice of Change shall:

2.1 set out the proposed Contractor Change in sufficient detail to enable Project Co to evaluate it in full;

2.2 specify the Contractor's reasons for proposing the Contractor Change;

2.3 indicate any implications of the Contractor Change;

2.4 indicate what savings, if any, will be generated by the Contractor Change, including:

2.4.1 not used;

2.4.2 whether such savings will be paid to Project Co in a lump sum,

in each case giving details in accordance with paragraph 8 of this Section 5 (*Contractor Changes*);

2.5 indicate whether there are any critical dates by which a decision by Project Co is required; and

2.6 request Project Co to consult with the Contractor with a view to deciding whether to agree to the Contractor Change and, if so, what consequential changes Project Co requires as a result.

3 Project Co shall evaluate the Contractor Notice of Change in good faith, taking into account all relevant issues, including whether:

3.1 a revision of the Contract Sum will occur;

3.2 the Contractor Change may affect the quality of the Works or the likelihood of successful completion of the Works and/or delivery of the Services (or any of them);

3.3 the Contractor Change will interfere with the relationship of Project Co with third parties;

3.4 the financial strength of the Contractor is sufficient to perform the Works after implementation of the Contractor Change;

3.5 the value and/or life expectancy of any of the Facilities will be reduced; or

3.6 the the Contractor Change materially affects the risks or costs to which Project Co is exposed.

4 As soon as practicable after receiving the Contractor Notice of Change, the parties shall meet (including meeting with the Board if required by the Project Co) and discuss the matters referred to in it, including in the case of a Relevant Change in Law those matters referred to in Clause 32.4 *(Relevant Changes in Law)* of this Agreement. During discussions Project Co may propose modifications to, or accept or reject, the Contractor Notice of Change.

5 If Project Co accepts the Contractor Notice of Change (with or without modification) the

parties shall consult and agree the remaining details as soon as practicable and upon agreement Project Co shall issue a notice confirming the Contractor Change which shall set out the agreed the Contractor Change and:

5.1 shall enter into any documents to amend this Agreement or any relevant Ancillary Document which are necessary to give effect to the Contractor Change;

5.2 not used; and

5.3 the Contractor Change shall be implemented within the period specified by Project Co in its notice of acceptance.

6 If Project Co rejects the Contractor Notice of Change, it shall not be obliged to give its reasons for such a rejection and the Contractor shall not be entitled to reimbursement by Project Co of any of its costs involved in the preparation of the Contractor Notice of Change.

7 Unless Project Co's written acceptance expressly agrees to an increase in the Contract Sum or that the Contractor should be entitled to relief from any of its obligations, there shall be no increase in the Contract Sum or relief granted from any obligations as a result of a the Contractor Change.

8 If a the Contractor Change causes, or will cause, the Contractor's costs or those of a sub-contractor to decrease, there shall be a decrease in the Contract Sum such that any cost savings (following deduction of costs reasonably incurred by the Contractor in implementing such Contractor Change) will be shared on the basis of fifty per cent (50%) of the saving being retained by the Contractor and fifty per cent (50%) of the saving being paid to Project Co as a lump sum within eight (8) Business Days of agreement or determination.

SECTION 6

Not Used

APPENDIX 1

Appendix 1 of Schedule Part 16 (*Change Protocol*) of the Project Agreement is hereby incorporated in this Agreement and forms part of this Agreement.

APPENDIX 2

Appendix 2 of Schedule Part 16 (*Change Protocol*) of the Project Agreement is hereby incorporated in this Agreement and forms part of this Agreement.

SCHEDULE PART 17

COMPENSATION ON TERMINATION

Part 1

1. COMPENSATION ON TERMINATION FOR PROJECT CO EVENTS OF DEFAULT

1.1 If:

(a) the Contractor terminates this Agreement pursuant to Clause 40A (*Project Co Events of Default*) and the Project Co Event of Default is not caused or contributed to by an event of Force Majeure; or

(b) this Agreement terminates under Clause 42.1 (*Voluntary Termination of the Project Agreement*) in circumstances where the Project Agreement has been terminated due to voluntary termination by the Board for a reason other than Force Majeure; or

(c) this Agreement terminates under Clause 42.2 (*Voluntary Termination of the Project Agreement*) in circumstances where the termination has not been caused or contributed to by an act or omission of the Contractor or a Board Event of Default and, in each case, no Contractor Event of Default has occurred;

the "**Project Co Default Termination Sum**" set out in paragraph 1.2 shall be paid by Project Co in accordance with Part 5 of this Schedule 17 (*Compensation on Termination*).

1.2 The Project Co Default Termination Sum shall be an amount equal to the aggregate of:

(a) all Sums Properly Due;

(b) all costs and expenses incurred by the Contractor as a result of the termination of this Agreement, including Subcontractor Losses, and reasonable administrative costs directly incurred (provided that the Contractor shall use all reasonable endeavours to mitigate its costs); and

(c) the Contractor's loss of profit,

LESS, to the extent it is a positive amount, the amounts which Project Co is entitled to set off pursuant to Clauses 34 and 46.12 of this Agreement, PROVIDED ALWAYS THAT such amounts shall be reduced to the extent that the Contractor fails to use all reasonable endeavours to mitigate such amounts and further provided that no account shall be taken of any liabilities and obligations of the Contractor arising out of:

(d) agreements or arrangements entered into by the Contractor to the extent that such agreements or arrangements were not entered into in connection with the Contractor's obligations in relation to the Project; and/or

(e) agreements or arrangements entered into by the Contractor to the extent that such agreements or arrangements were not entered into in the ordinary course of business and on commercial arm's length terms.

1.3 For the avoidance of doubt where paragraph 1.1(a) applies and the Project Co Event of Default is caused or contributed to by a Board Event of Default, where paragraph 1.1(b) applies and the Project Agreement has been subject to voluntary termination by the Board, and where paragraph 1.1(c) applies and the Project Agreement has been terminated for a

Board Event of Default, any payment by Project Co of the Project Co Default Termination Sum shall be subject always to Clause 75 (*Overriding Entitlements*).

Part 2

1. COMPENSATION FOR CONTRACTOR DEFAULT - NO PROJECT AGREEMENT TERMINATION

1.1 If Project Co terminates this Agreement pursuant to Clause 40 (*Contractor Event of Default*) or if Project Co terminates this Agreement pursuant to Clause 44.3 (*Corrupt Gifts and Payments*) and (in each case) the Project Agreement is not terminated by the Board, the "**Contractor Replacement Termination Sum**" set out in paragraph 1.2 of this Part 2 of this Schedule Part 17 (*Compensation on Termination*) shall be paid by the Contractor in accordance with Part 5 of this Schedule Part 17 (*Compensation on Termination*).

1.2 The Contractor Replacement Termination Sum shall be an amount equal to the aggregate of:

(a) all costs and expenses associated with the termination of this Agreement and the cost of procuring, appointing, mobilising and installing the replacement contractor and Project Co's Direct Losses arising from or connected with the termination of this Agreement and replacement of the Contractor or the relevant Event of Default (including for the avoidance of doubt any additional financing costs which would not otherwise have been payable and any loss of or reduction to Monthly Service Payments under the Project Agreement resulting from delay in achieving the Actual Completion Date arising from delay on the part of the Contractor, the relevant Event of Default or the termination and replacement (but not for the avoidance of doubt delay arising from the acts or omissions of any replacement contractor));

(b) all amounts including costs of early termination of interest rate and/or inflation hedging arrangements and other breakage costs payable by Project Co under the Funding Agreements as a result of a prepayment under the Senior Funding Agreements (and/or if relevant termination of interest rate and/or inflation hedging arrangements under the Funding Agreements as a result of partial termination of this Agreement) and in respect of Permitted Borrowings, subject to Project Co and the Senior Funders mitigating all such costs to the extent reasonably possible (unless the amount or formula for determining the amount of such costs are fixed in advance under the terms of the relevant Funding Agreements);

(c) any amounts in excess of the Contract Sum which would have been due to the Contractor under this Agreement, payable by Project Co to an alternative contractor for the performance of obligations equivalent to the obligations of the Contractor under this Agreement and/or Project Co's internal costs of performing the obligations itself from the Termination Date to the Expiry Date;

(d) Project Co's costs in reinstating any of its assets or other equipment required for the performance of its obligations under the Project Agreement, to the extent that such reinstatement is required as a result of a breach by the Contractor of its obligations under this Agreement; and

(e) amounts which Project Co is entitled to set off pursuant to Clauses 34 and 46.13 of this Agreement;

LESS

(f) all Sums Properly Due,

PROVIDED ALWAYS THAT such amounts shall be reduced to the extent that Project Co fails to use all reasonable endeavours to mitigate such amounts.

Part 3

1. COMPENSATION FOR CONTRACTOR DEFAULT - PROJECT AGREEMENT TERMINATION

1.1 If Project Co terminates this Agreement pursuant to Clause 40 (*Contractor Event of Default*) or if this Agreement is terminated in its entirety in accordance with Clause 42.2 (*Voluntary Termination of the Project Agreement*) following termination of the Project Agreement as a result of a Project Co Event of Default or if Project Co terminates this Agreement pursuant to Clause 44.3 (*Corrupt Gifts and Payments*) and/or notice of termination of the Project Agreement is given by the Board and, in each case, the Project Agreement termination has been caused or contributed to by any act or omission of the Contractor, the **"Contractor Default Termination Sum"**, set out in paragraph 1.2 of this Part 3 of Schedule Part 17 (*Compensation on Termination*) shall be paid by the Contractor in accordance with Part 5 of this Schedule Part 17 (*Compensation on Termination*).

1.2 The Contractor Default Termination Sum shall be an amount equal to the aggregate of:

(a) the Base Senior Debt Termination Amount as at the Termination Date;

(b) all Project Co's costs, expenses and Direct Losses associated with the termination of this Agreement or other Project Documents (including Sub-contractor Losses (other than in respect of the Contractor));

(c) amounts which Project Co is entitled to set off pursuant to Clauses 34 and 46.12 of this Agreement; and

(d) the aggregate amount for which:

(i) the share capital of Project Co; and

(ii) the Junior Debt,

could have been sold on an open market basis on the Relevant Assumptions,

LESS (subject always to Clause 75 (*Overriding Entitlements*))

(e) the amounts received by Project Co from the Board in respect of compensation on termination pursuant to Schedule 17 of the Project Agreement or, as the case may be, amounts received in respect of the Project pursuant to the exercise by the Funders of their rights under the Funders' Direct Agreement; and

(f) all Sums Properly Due.

1.3 The liability of the Contractor to Project Co under this Part 3 following termination of this Agreement shall be subject to Clause 54A (*Limits on Contractor's Liability*) of this Agreement.

Part 4

CONSEQUENCES OF TERMINATION FOR FORCE MAJEURE/OTHER EVENTS

1.4 If this Agreement terminates pursuant to Clause 31 (*Force Majeure*) or any other reason not within Parts 1-3 of this Schedule Part 17 (*Compensation on Termination*), the **"Force Majeure Termination Sum"** set out in paragraph 1.5 of this Part 4 shall be paid by Project Co in accordance with Part 5 of this Schedule Part 17 (*Compensation on Termination*).

1.5 The Force Majeure Termination Sum shall, subject always to Clause 75 (*Overriding Entitlements*), be an amount equal to the Subcontractor Losses (but excluding therefrom any claims for loss of profit), LESS, to the extent it is a positive amount, the amounts which Project Co is entitled to set off pursuant to Clauses 34 and 46.12 of this Agreement, PROVIDED ALWAYS THAT the Force Majeure Termination Sum shall be reduced to the extent that the Contractor fails to use all reasonable endeavours to mitigate the Force Majeure Termination Sum and further provided that no account shall be taken of any liabilities and obligations of the Contractor arising out of:

(a) agreements or arrangements entered into by the Contractor to the extent that such agreements or arrangements were not entered into in connection with the Contractor's obligations in relation to the Project, and/or

(b) agreements or arrangements entered into by the Contractor to the extent that such agreements or arrangements were not entered into in the ordinary course of business and on commercial arm's length terms.

Part 5

General

1. PAYMENT AND INTEREST (EITHER WAY)

1.1 In this Schedule Part 17 (*Compensation on Termination*) where any party (a "**Paying Party**") is required to pay a Termination Sum to the other party (the "**Receiving Party**") and the Termination Sum is defined as being an amount ("**A**") less another amount ("**B**"), then if B exceeds A, the amount by which B exceeds A shall be paid by the Receiving Party to the Paying Party. If under Part 3 (*CONTRACTOR DEFAULT - PROJECT AGREEMENT TERMINATION*), the Receiving Party is the Contractor and the Paying Party is Project Co: (i) the amount due to the Contractor shall not exceed the amount referred to in paragraph 1.2(f) of Part 3 and (ii) any requirement in paragraph 1.2 of Part 3 that an amount has been "received" shall be replaced with a requirement that such amount has been agreed or finally determined as due to Project Co from the Board and that such amount would have fallen due for payment to the Contractor in accordance with Clause 75 (*Overriding Entitlements*) had Project Co been under an obligation to pay such amount to the Contractor under this Agreement.

1.2 The Termination Sum shall be calculated on the basis of reasonable estimates of the anticipated amounts as agreed or determined pursuant to this Agreement.

1.3 In respect of the Termination Sum payments to be made pursuant to any of Parts 1, 2 or 4 of this Schedule, as soon as practicable after, and in any event within 15 Business Days of the Termination Date Project Co or, as the case may be, the Contractor shall give to the other party an invoice for the relevant Termination Sum and sufficient supporting evidence, reasonably satisfactory to the recipient, justifying the amount of the relevant Termination Sum including a breakdown of each of the individual elements of such Termination Sum provided that in relation to the Contractor Replacement Termination Sum to be paid in accordance with Part 2 of this Schedule, Project Co may elect to delay giving an invoice in accordance with this paragraph until such time as it reasonably considers that it has sufficient information as to the amount referred to in paragraph (a) of Part 2 of this Schedule.

1.4 In respect of Termination Sum payments to be made pursuant to Part 3 of this Schedule, as soon as practicable and in any event within 20 Business Days after Project Co is notified of the amount it is to receive under the Project Agreement or, as the case may be, pursuant to the exercise by the Funders of their rights under the Funders' Direct Agreement, Project Co shall give to the Contractor an invoice for the relevant Termination Sum and sufficient supporting evidence reasonably satisfactory to the Contractor justifying the amount of the relevant Termination Sum including a breakdown of each of the individual elements of such sums.

1.5 Subject to Clause 75 (*Overriding Entitlements*), in respect of Termination Sum payments to be made pursuant to Parts 1 or 4 of this Schedule, the relevant Termination Sum shall be paid within 40 Business Days of the Invoice Date together with interest on the relevant Termination Sum (or any part of such sum that remains outstanding) from the Termination Date until the date of payment:

(a) at the No Default Interest Rate for the period from (but excluding) the Termination Date to (and including) the date which is 40 Business Days after the Invoice Date; and

(b) thereafter at the Default Interest Rate.

1.6 On the request of either party within 6 months of the Actual Completion Date in the case of Part 2 and otherwise within 6 months of the Termination Date and subject always to Clause 75 (*Overriding Entitlements*) in the case of Parts 1 or 4, an adjusting Termination Sum payment shall be made to reflect actual amounts or a revised estimate of such amounts to be agreed or determined in accordance with this Agreement. The adjusting Termination Sum payment shall be subject to paragraphs 1.3 and 1.5 with references to "Termination Date" in paragraph 1.3 being read as references to the date of the request.

2. FULL AND FINAL SETTLEMENT

Subject to paragraph 1.6, any and/or all funds irrevocably paid by one party to the other under this Schedule will be in full and final settlement of each party's rights and claims against the other for breaches and/or termination of this Agreement and any other Project Document whether under contract, tort, restitution or otherwise but without prejudice to:

(a) any antecedent liability of the Contractor to Project Co which Project Co has been unable to set off pursuant to Clauses 34 or 46.12 of this Agreement;

(b) any antecedent liability of either party to the other that arose prior to the Termination Date (but not from the termination itself) to the extent such liability has not already been taken into account in determining or agreeing the Termination Sum; and

(c) any liabilities arising in respect of any breach by either party of their obligations under Clause 47.6 (*Consequences of Termination*) of this Agreement which arises or continues after the Termination Date.

3. COSTS

The costs and/or expenses to be taken into account in the calculation of all Termination Sums due pursuant to this Schedule shall only be such costs and/or expenses to the extent that they are reasonable and proper in quantum and shall have been or will be reasonably and properly incurred.

4. UNDISPUTED AMOUNTS

If the calculation of the amount of any Termination Sum is disputed then any undisputed element of that Termination Sum shall be paid in accordance with this Part 5 of this Schedule and the disputed element shall be dealt with in accordance with Schedule Part 20 (*Dispute Resolution Procedure*).

5. ORDINARY COURSE OF BUSINESS

Project Co and the Contractor agree and acknowledge that the compensation payable under this Agreement is payable solely in connection with the performance of obligations relating to the Project and that these agreements and arrangements are entered into in the ordinary course of business and on commercial arm's length terms by each party.

Part 6

Definitions

In this Schedule Part 17 (*Compensation on Termination*):

"Base Senior Debt Termination Amount"	has the meaning giving in the Project Agreement;
"Expiry Date"	means the first to occur of the date of expiry of this Agreement and the Project Agreement.
"Invoice Date"	means the date that is the later of: (a) the date on which an invoice for the relevant termination sum is received; and (b) the date on which the supporting evidence required pursuant to paragraph 1.3 of Part 5 of this Schedule is received.
"No Default Interest Rate"	has the meaning given in the Project Agreement.
"Subcontractor Losses"	means the amounts reasonably and properly incurred by the Contractor, or payable by the Contractor to its Subcontractors under their respective contracts with the Contractor, as a direct result of termination of this Agreement provided that such amount shall be reduced to the extent that the Contractor or its Subcontractors fail to use all reasonable endeavours to mitigate such amount and provided that no account should be taken of any liabilities and obligations of the Contractor to its Subcontractors arising out of: (a) agreements or arrangements entered into by the Contractor to the extent that such agreements or arrangements were not entered into in connection with the Contractor's obligations in relation to the Project; and/or (b) agreements or arrangements entered into by the Contractor to the extent that such agreements or arrangements were not entered into in the ordinary course of business and on the commercial arm's length terms.
"Sums Properly Due"	means sums properly due and in respect of executed Works which but for termination would have become due, but unpaid, from Project Co to the Contractor under this Agreement as at the Termination Date less any amounts paid by Project Co after the Termination Date in respect of such sums.
"Termination Sum"	means the Project Co Default Termination Sum, the Contractor Replacement Termination Sum, the Contractor Default Termination Sum and the Force Majeure Termination Sum or any of them.

"Relevant Assumptions" means the assumptions that the sale of Project Co is on the basis that:

(a) there has been no default of this Agreement by the Contractor or Project Co;

(b) there has been no termination of this Agreement;

(c) that the sale is on a going concern basis, that no restrictions exist on the transfer of share capital or Junior Debt;

(d) the Works are completed, there are no Defects in the Works, the Facilities are fully operational and Services are being delivered in accordance with the Project Agreement;

(e) no Additional Permitted Borrowing has taken place and therefore that the effect of the Additional Permitted Borrowing on the calculation of such amount is disregarded;

(f) that otherwise the actual state of affairs of Project Co and the Project is taken into account;

(g) all projected cashflows to shareholders and Junior Debt would be discounted at 8% on the open market;

(h) cashflows to Project Co, the shareholders and Junior Debt are determined on the basis of income less avoidable costs, where avoidable costs are costs which could reasonably be expected to be avoided during the Operational Term (rather than assuming that the costs forecast in the Financial Model) taking into consideration for example potential savings that could reasonably be expected to be achieved on lifecycle and insurance expenditure.

SCHEDULE PART 18

[NOT USED]

SCHEDULE PART 19

RECORD PROVISIONS

SECTION 1

GENERAL REQUIREMENTS

1 The Contractor shall retain and maintain all the records (including superseded records) referred to in Section 2 (*Records to be Kept*) of this Schedule Part 19 (*Record Provisions*) in accordance with this Section 1 (*General Requirements*) of this Schedule Part 19 (*Record Provisions*), the requirements of Good Industry Practice, in chronological order, in a form that is capable of audit and that enables the Project Co to perform its obligations under Schedule Part 19 (*Record Provisions*) of the Project Agreement and at its own expense. The Contractor shall make such records available for inspection to the Board and the Project Co and any person nominated by the Project Co where any of the Board, or Project Co has reasonable cause for requiring such records, on giving reasonable notice shall provide such facilities as the Board, Project Co or any person nominated by the Project Co may reasonably require for such person(s) to visit any place where the records are held and examine the records maintained under this Schedule Part 19 (*Record Provisions*). It is acknowledged and agreed that the Project Co shall have reasonable cause for requesting inspection of any of the records referred to in Section 2 (*Records to be Kept*) of this Schedule Part 19 (*Record Provisions*) where the Board makes a request for inspection thereof under the Project Agreement.

2 Wherever practical, original records shall be retained and maintained in hard copy form. True copies of the original records may be kept by the Contractor where it is not practicable to retain original records.

3 Those records relating to the Construction Phase shall be retained for a period of not less than twelve (12) years after the Actual Completion Date and at the end of the twelve year period the records shall be handed over to Project Co in a fully indexed, referenced and readily retrievable condition.

4 Financial and other records (including without limitation all information provided in support of any Change) shall be retained and maintained by the Contractor for a period of at least six (6) years after the Certificate of Making Good Defects in sufficient detail, in appropriate categories and generally in such a manner to enable the Contractor to comply with its obligations under Clause 63.1 (*Information and Audit Access*) and where appropriate to enable the data in such records to be entered into the Financial Model so that the output from the Financial Model (on the basis of such data) can be directly compared with the actual financial cashflow and performance of Project Co.

5 Where the Contractor wishes to dispose of any records maintained as provided in this Schedule Part 19 (*Record Provisions*) in respect of which the required period for their retention has expired, then the Contractor shall notify the Project Co and if, within forty two (42) Business Days of such notice, the Project Co notifies the Contractor that certain of those records should be delivered to the Board, then the Contractor shall deliver up such records to the Board in the manner and at the location as the Project Co shall specify, and the costs of retaining those records in safe storage and delivering up the same shall be borne by the Contractor .

6 Subject to paragraph 5, for a period of not more than six (6) years following the termination for whatever reason of this Agreement, the Contractor shall retain in safe storage all such records as are referred to in Section 2 (*Records to be Kept*) of this Schedule Part 19 (*Record Provisions*) which were in existence at the date of termination of this Agreement. On the expiry of such period or at the earlier request of the Project Co (and the Parties acknowledge that such a request shall be deemed to have been issued by the Board upon the occurrence

of any of the events set out in Clause 40.1.1 (*Insolvency of the Contractor or the Parent Company*) whether prior to or following termination of this Agreement), the Contractor shall deliver up all those records (or where those records are required by statute to remain with the Contractor or a Contractor Party, copies thereof) to the Project Co in the manner and at the location as the Board shall specify. The Project Co shall procure that the Project Co shall make available to the Contractor all the records the Contractor delivers up pursuant to this paragraph subject to reasonable notice. The costs of retaining those records in safe storage and delivering up the same shall be borne:

6.1 by the Contractor where the termination arises as a result of a Contractor Event of Default; and

6.2 subject to Clause 75 (*Overriding Entitlements*), by the Project Co where the termination arises for any other cause.

7 Without prejudice to the foregoing, the Contractor shall provide the Project Co:

7.1 as soon as they may be available and in any event within sixty (60) Business Days after the end of the first six (6) months of each financial year of Brookfield Multiplex Pty which falls during the Project Term, a copy, certified as a true copy by an officer of Brookfield Multiplex Pty, of its unaudited interim accounts and, if appropriate, of consolidated unaudited interim accounts of Brookfield Multiplex Pty, its Subsidiaries and Holding Company (if any) which would (if Brookfield Multiplex Pty were listed on the Sydney Stock Exchange whether or not it is) be required to be sent to shareholders as at the end of and for each such six (6) month period; and

7.2 as soon as they may be available and in any event within sixty (60) Business Days after the end of the first six (6) months of each financial year of the Contractor which falls during the Project Term, a copy, certified as a true copy by an officer of the Contractor, of its unaudited interim accounts and, if appropriate, of consolidated unaudited interim accounts of the Contractor, its Subsidiaries and Holding Company (if any) which would (if the Contractor were listed on the London Stock Exchange whether or not it is) be required to be sent to shareholders as at the end of and for each such six (6) month period; and

as soon as the unaudited interim accounts referred to in paragraphs 7.1 and 7.2 shall have been sent to the shareholders of Brookfield Multiplex Pty and the Contractor (as applicable) in order to be laid before an annual general meeting of Brookfield Multiplex Pty or the Contractor (as applicable) but not later than one hundred and thirty (130) Business Days after the end of each accounting reference period of Brookfield Multiplex Pty and the Contractor (as applicable) part or all of which falls in a Contract Year, a copy of the audited accounts of Brookfield Multiplex Pty and the Contractor and if appropriate, of the consolidated audited accounts of Brookfield Multiplex Pty and the Contractor and, its Associated Companies (if any), in respect of that period, prepared in accordance with the Accounting and generally accepted accounting principles and bases in Australia (as regards Brookfield Multiplex Pty) and Companies Act 1985 and generally accepted accounting principles and bases Scotland (as regards the Contractor), consistently applied together with copies of all related directors' and auditors' reports and all other notices/circulars to shareholders.

8 [Not Used]

9 Any drawings required to be made or supplied pursuant to this Agreement shall be of a size appropriate to show the detail to be depicted clearly without magnifying aids and shall conform to British Standards 1192 or 308 or equivalent as appropriate. Where by prior agreement between the Board and the Project Co the Board has agreed to accept microfilm, microfiche or other storage media (which must include secure back up facilities), drawings and other documents shall be made or supplied in such form as has been agreed.

10 [Not Used]

11 The Contractor shall use all reasonable endeavours to assist the Project Co and the Board in the preparation of any report and/or return required pursuant to regulations, directions or guidance applicable to the Board (in each case as amended, replaced or consolidated from time to time) or as required by external agencies including without limitation, reports and returns regarding the physical condition of the Facilities, health and safety, under the Fire (Scotland) Regulations 2005 and the Fire Safety (Scotland) Regulations 2006, relating to environmental health and to comply with The NHS and You or any document replacing it or required by the Scottish Government Health Directorates, the Scottish Government or the Scottish Futures Trust from time to time during the Construction Phase.

SECTION 2

RECORDS TO BE KEPT

1 This Agreement and, its Schedule including all amendments to such agreements.

2 The Contractor shall at all times maintain a full record of particulars of the costs of performing the Construction Operations including any Change, including those relating to the design and construction thereof. This shall require the Contractor to keep (and where appropriate to procure that the sub-contractors shall keep) books of account in accordance with best accountancy practice with respect to the Agreement showing in detail:

2.1 [Not Used];

2.2 payments to Sub-Contractors;

2.3 [Not Used];

2.4 such other items as the Project Co may reasonably require to conduct cost audits for verification of cost expenditure or estimated expenditure, for the purpose of Clause 29.11, Schedule Part 16 (*Change Protocol*) and Clause 32 (*Changes in Law*),

and the Contractor shall have (and procure that the Sub-Contractors shall have) the books of account evidencing the items listed in paragraphs 2.1 to 2.4 available for inspection by the Project Co, including any person nominated by the Project Co upon reasonable notice, and shall present a report of these to the Project Co as and when requested.

3 All other documents, software or other information expressly referred to in this Agreement.

4 Records relating to the appointment and supersession of the Contractor's Representative and Project Co's Representative.

5 Project Data.

6 Documents, drawings, design data or submissions raised in accordance with Schedule Part 8 (*Review Procedure*).

7 Documents relating to planning applications, consents, refusals and appeals.

8 Records relating to any specialist or statutory inspections of the Facilities and the Retained Estate Handback Infrastructure, including any roadways.

9 Notices, reports, results and certificates relating to completion of the Works and completion of the commissioning activities.

10 [Not Used].

11 Documents relating to events of Force Majeure, Delay Events and Relief Events and the consequences of the same.

12 [Not Used].

13 [Not Used].

14 [Not Used].

15 Documents submitted in accordance with Schedule Part 16 (*Change Protocol*) and all documents provided in support.

16 Documents related to referrals to the Dispute Resolution Procedure.

17 [Not Used].

18 [Not Used].

19 Tax invoices and records related to Value Added Tax.

20 [Not Used]

21 Records required by Law (including in relation to Health and Safety matters and health and safety files prepared pursuant to CDM Regulations) and all Consents.

22 Documents relating to insurance and insurance claims.

23 All other records, notices or certificates required to be produced and/or maintained by the Contractor pursuant to this Agreement.

24 [Not Used].

SCHEDULE PART 20

DISPUTE RESOLUTION PROCEDURE

PART A

1 The procedure set out in this Schedule Part 20 (*Dispute Resolution Procedure*) shall apply to any dispute, claim or difference arising out of or relating to this Agreement ("**Dispute**").

2 This Dispute Resolution Procedure shall not impose any pre-condition on either party or otherwise prevent or delay either party from commencing proceedings including by way of adjudication or in any court of competent jurisdiction in relation to any Dispute in which that party requires either:

2.1 an order (whether interlocutory or final) restraining the other party from doing any act or compelling the other party to do any act; or

2.2 a decree for a liquidated sum to which there is no stateable defence.

3 CONSULTATION AND MEDIATION

3.1 If a dispute arises in relation to this Agreement, the Contractor and the Project Co shall consult in good faith in an attempt to come to an agreement in relation to the Dispute.

3.2 If the parties have been unable to resolve the Dispute within twenty (20) Business Days of the Dispute arising, they may (if both parties so agree) refer the Dispute to mediation on such conditions as may be agreed between the parties. Any mediation shall be completed within thirty (30) Business Days of such referral and any agreement arising therefrom shall be recorded in writing and signed by the parties and shall be binding and final to the extent set out in such agreement unless otherwise agreed.

3.3 For the avoidance of doubt, consultation or mediation shall not be a precondition to the commencement of Adjudication or court proceedings.

4 ADJUDICATION

4.1 Either party may at any time (notwithstanding that other dispute resolution procedures are running concurrently) give the other party to the Dispute notice of its intention to refer the Dispute to adjudication (the "**Notice of Adjudication**"). The party giving the Notice of Adjudication (the **"Referring Party"**) shall by the same means of communication send a copy of the Notice of Adjudication to an adjudicator selected in accordance with paragraph 4.2 below or paragraph 4.11 (the **"Adjudicator"**).

4.2 The Adjudicator nominated to consider a Dispute referred to him shall, subject to paragraph 4.11, be selected on a strictly rotational basis from the relevant panel of adjudicators appointed in accordance with the following:

4.2.1 there shall be a panel of adjudicators in respect of construction matters (the "**Construction Panel**"). All the adjudicators on the Construction Panel shall be wholly independent of the Board, Project Co, the Contractor, the relevant Sub-Contractor and any of the major competitors of the Contractor or the relevant Sub-Contractor;

4.2.2 the Construction Panel shall be comprised of three (3) adjudicators as identified in paragraph 7 (*Construction Panel* Members). Such appointments shall take place within 28 days of the date of this Agreement;

4.2.3 [Not Used];

4.2.4 if any member of the Construction Panel resigns, dies or is incapable of acting during the term of the Agreement, a replacement adjudicator shall be appointed by Project Co and the Contractor as soon as practicable;

4.2.5 if Project Co and the Contractor are unable to agree on the identity of the adjudicators to be selected for the Construction Panel or any replacement adjudicator, the Chairman (or Vice Chairman) for the time being of the Chartered Institute of Arbitrators Scottish Branch shall appoint such adjudicators(s) within seven (7) days of any application for such appointment by either party;

4.2.6 in the event that the first Construction Panel member is unable or unwilling to confirm acceptance of his appointment as Adjudicator or where he fails to respond within two (2) days of the date of the Notice of Adjudication, then the Referring Party shall invite the person next in line to act as Adjudicator. In the event that the second panel member is unwilling or unable to confirm acceptance of his appointment as Adjudicator within four (4) days of the date of the Notice of Adjudication, then the Referring Party may apply to the Chairman (or Vice Chairman) for the time being of the Chartered Institute of Arbitrators Scottish Branch who shall within seven (7) days of the date of the Notice of Adjudication, nominate an Adjudicator (who shall also within the same period, confirm acceptance of his appointment as Adjudicator) to determine the Dispute described in the Notice of Adjudication;

4.2.7 [Not Used].

4.3 The Referring Party shall, within 7 days of the date of the Notice of Adjudication, serve its statement of case (the **"Referral Notice"**) on the Adjudicator (appointed pursuant to paragraph 4.2) and the other party to the Dispute (the **"Responding Party"**). The Referral Notice shall set out each element of the Referring Party's claim and the relief or remedy sought in sufficient detail so as to enable the Responding Party to understand and, where appropriate, respond to the claim and the Referral Notice shall be accompanied by copies of, or relevant extracts from, this Agreement and such other documents as the Referring Party intends to rely upon. The date of the referral of the Dispute (the **"Referral"**) shall be the date of the Referral Notice.

4.4 Within seven (7) days of appointment in relation to a particular Dispute, the Adjudicator shall establish the procedure and timetable for the adjudication. The Adjudicator shall have absolute discretion as to how to conduct the adjudication, including whether a meeting is necessary. He shall establish the procedure and timetable subject to any limitation within this Agreement. The parties shall comply with any request or direction of the Adjudicator in relation to the adjudication.

4.5 The Adjudicator shall reach a decision on the Dispute within twenty-eight (28) days of the date of the Referral (or such other period as the parties may agree). The Adjudicator may extend the period of 28 days by up to 14 days with the consent of the Referring Party. Unless the parties otherwise agree, the Adjudicator shall give reasons for his decision. The adjudicator shall set out in writing the reasons for his decisions. Unless and until the Dispute is finally determined by Court proceedings or by an agreement in writing between the parties, the Adjudicator's decision shall be binding on both parties who shall forthwith give effect to the decision.

4.6 The Adjudicator's costs of any reference shall be borne as the Adjudicator shall specify or, in default, equally by the parties. Each party shall bear its own costs arising out of the adjudication, including legal costs and the costs and expenses of any witnesses.

4.7 The Adjudicator shall be deemed not to be an arbitrator but shall render his decision as an adjudicator and the law relating to arbitration shall not apply to the Adjudicator or his determination or the procedure by which he reached his determination.

4.8 The Adjudicator shall act fairly and impartially and may take the initiative in ascertaining the facts and the law. The Adjudicator shall have the power to open up, review and revise any opinion, certificate, instruction, determination or decision of whatever nature given or made under this Agreement.

4.9 All information, data or documentation disclosed or delivered by a party to the Adjudicator in consequence of or in connection with his appointment as Adjudicator shall be treated as confidential. The Adjudicator shall not, save as permitted by Clause 61 (*Confidentiality*), disclose to any person or company any such information, data or documentation and all such information, data or documentation shall remain the property of the party disclosing or delivering the same and all copies shall be returned to such party on completion of the Adjudicator's work.

4.10 The Adjudicator is not liable for anything done or omitted in the discharge or purported discharge of his functions as Adjudicator unless the act or omission is in bad faith. Any employee or agent of the Adjudicator is similarly protected from liability.

4.10.A.1 The Adjudicator may on his own initiative or on the request of the Referring Party or Responding Party correct his decision so as to remove a clerical or typographical error arising by accident or omission.

4.10.A.2 Any correction of a decision shall be made within 5 days of the date upon which the Adjudicator's decision was delivered to the parties.

4.10.A.3 Any correction of a decision shall form part of the decision.

4.11 NOT USED

4.12 NOT USED

4.13 NOT USED

4.14 NOT USED

4.15 NOT USED

5 COURT PROCEEDINGS

Subject to paragraph 4 (*ADJUDICATION*) all Disputes, to the extent not finally resolved pursuant to the procedures set out in the foregoing provisions of this Schedule Part 20 (*Dispute Resolution Procedure*), shall be referred to the Court of Session in Edinburgh.

6 NOT USED

7 CONSTRUCTION PANEL MEMBERS

The panel members referred to in paragraph 4 are as follows:

Construction Panel		
Item	**Type of Dispute**	**Nominating body**

1.	Legal	Person to be used: 1.1 Jonathan Broome, Axiom Stable, Advocates' Library, Parliament House, Edinburgh, EH1 1RF; or 1.2 Robert Howie QC, Ampersand Stable, Advocates' Library, Parliament House, Edinburgh EH1 1RF whom failing such person to be nominated by: 1.3 Dean/Vice President of Faculty of Advocates, Parliament House, Edinburgh; or 1.4 President/Vice President of Law Society of Scotland
2.	Technical	Person to be used: 1.1 Janey Milligan, Construction Dispute Resolution, Pavillio 1, Parkway Court, 291 Springhill Parkway Glasgow G69 6GA; or 1.2 Trevor Pettigrew Smith, FTI Brewer Consulting, Earlsgate House, 35 St Ninians Road, Stirling, FK8 2HE whom failing such person to be nominated by: 1.3 President/Vice President of the Royal Incorporation of Chartered Surveyors (Scottish Branch); or 1.4 President/Vice President of the Royal Incorporation of Architects in Scotland; or 1.5) President/Vice President of the Institution of Civil Engineers (Scottish Branch)

8 NOT USED

9 CONTINUING OBLIGATIONS

Unless this Agreement has already been repudiated or terminated, the parties shall, (notwithstanding that any Dispute is subject to the Dispute Resolution Procedure set out in this Schedule Part 20 (*Dispute Resolution Procedure*)), continue to carry out their obligations in accordance with this Agreement.

PART B

RELATED DISPUTES/PARALLEL ISSUES

1 DISPUTES UNDER THIS AGREEMENT AND THE PROJECT AGREEMENT, OR THE SERVICES CONTRACT OR THE INDEPENDENT TESTER CONTRACT THAT ARE RELATED.

1.1 The provisions of this Part B shall apply where Project Co is of the opinion that any issues in a Dispute are related to, any:

1.1.1 issues (**Project Agreement Parallel Issues**) in a dispute, claim or difference (**Related Project Agreement Dispute**) between Project Co and the Board arising out of or relating to the Project Agreement;

1.1.2 issues (**Services Contract Parallel Issues**) in a dispute, claim or difference (**Related Services Contract Dispute**) between Project Co and the Service Provider arising out of or relating to the Services Contract; and/or

1.1.3 issues (**Independent Tester Contract Parallel Issues**) in a dispute, claim or difference (**Related Independent Tester Contract Dispute**) between Project Co and the Independent Tester arising out of or relating to the Independent Tester Contract.

(Project Agreement Parallel Issues, Services Contract Parallel Issues and Independent Tester Contract Parallel Issues being together referred to as **Parallel Issues** and a Related Project Agreement Dispute, a Related Services Contract Dispute and a Related Independent Tester Contract Dispute together being referred to as a **Related Dispute**.

2 **THE CONTRACTOR TO ASSIST IN DISPUTE RESOLUTION.**

The Contractor shall at its own cost and within the timescales contemplated by any relevant dispute resolution procedure afford all such assistance, and provide to Project Co all such documents, data and information as Project Co may reasonably request in connection with the conduct of, or negotiations in connection with, any Related Dispute.

3 **CONSOLIDATION OF PROJECT AGREEMENT DISPUTES WITH DISPUTES UNDER THIS AGREEMENT.**

3.1 Without limiting paragraph 2, the Contractor acknowledges paragraph 4.11 of Schedule Part 20 (*Dispute Resolution Procedure*) of the Project Agreement. Where a Dispute under this Agreement has been referred to Adjudication pursuant to this Schedule Part 20 (*Dispute Resolution Procedure*) and an Adjudicator has been appointed, and a Related Project Agreement Dispute has not been referred to adjudication under the Project Agreement, Project Co may request that the Related Project Agreement Dispute be referred to the Adjudicator appointed pursuant to this Schedule Part 20 (*Dispute Resolution Procedure*) and subject to paragraphs 3.2 and 3.4 below, in the event that the Adjudicator orders that a Related Project Agreement Dispute be consolidated with a Dispute under this Agreement with which he is dealing, then:

3.1.1 with effect from the time of such order, the Related Project Agreement Dispute shall be consolidated with the Dispute and shall be determined by the Adjudicator; and

3.1.2 such order shall be binding on Project Co and the Contractor and both of them shall acknowledge the appointment of the Adjudicator as the

adjudicator of the Related Project Agreement Dispute, with Project Co using its best endeavours to procure that the Board shall, with effect from the time of such order, comply with the requirements of this Agreement and any requirement or direction of the Adjudicator appointed under this Agreement as to the future conduct of the determination of the Dispute and the Related Project Agreement Dispute; and

3.1.3 notwithstanding paragraph 4.6 of Part A, Project Co and the Contractor shall be jointly responsible with the Board for the Adjudicator's fees and expenses including those of any specialist consultant appointed under the adjudication procedure in this Agreement, in respect of the period in which the Dispute is consolidated with the Related Project Agreement Dispute pursuant to an order of the Adjudicator appointed under this Agreement ("**Consolidated Adjudication Costs**"). Project Co and the Contractor agree that the Adjudicator shall have the discretion to make directions to require Project Co, the Contractor and the Board to pay or make contribution to the Consolidated Adjudication Costs in different proportions. If no such directions are made, Project Co, the Contractor and the Board shall bear the Consolidated Adjudication Costs in equal shares, and if Project Co, the Contractor or the Board has paid more than such equal share, that party or third party shall be entitled to a contribution from the other party, or parties or third party, as the case may be.

3.2 Notwithstanding anything to the contrary, a Related Project Agreement Dispute may only be consolidated with an Adjudication under this Agreement, if the Adjudicator receives particulars of the Related Project Agreement Dispute within ten (10) days of the referral of the Adjudication to the Adjudicator under this Agreement.

3.3 The Contractor shall hereby consents to the request of the Project Co that a Related Project Agreement Dispute be consolidated (in terms of paragraph 3.1) with an Adjudication under this Agreement and that it be heard by the Adjudicator.

3.4 Where the Adjudicator under this Agreement refuses to order the consolidation of a Related Project Agreement Dispute with a Dispute under this Agreement or paragraph 3.2 above applies, paragraphs 4.3 to 4.10 of Part A shall apply to the Dispute but the Parties agree that the determination of the Parallel Issue in the Project Agreement Related Dispute shall determine the Parallel Issue in the Dispute under this Agreement and shall bind the Parties to this Agreement.

3.5 Where the Adjudicator provides a Project Agreement Related Dispute Decision, it shall be binding on the parties.

4 NAME BORROWING

4.1 Without limiting paragraph 33, the Contractor shall, except to the extent otherwise directed by Project Co, as agent for and on behalf of Project Co conduct the resolution of any dispute (including any negotiations and the commencement and prosecution or defence of any proceedings), under any of the Project Agreement, the Services Contract or the Independent Tester Contract, in relation to any Parallel Issue in the manner and within the time limits prescribed in the Project Agreement, the Services Contract or the Independent Tester Contract (as the case may be) and in such manner as not to prejudice or affect the rights, remedies and obligations of Project Co in relation to the Board, the Services Provider or the Independent Tester or to cause Project Co any loss, liability or additional expense of any nature whatsoever (**Name Borrow**) and the Contractor shall bear the risk and responsibility of any failure on its part to comply with this provision.

4.2 Where the Contractor Name Borrows, it shall:

4.2.1 deliver to Project Co at least five Business Days in advance a copy of each notice, submission or other document to be given by the Contractor in accordance with paragraph 4.1 of this Part B, on Project Co's behalf, except in any case where under the Project Agreement, the Services Contract or the Independent Tester Contract (as the case may be) notice has to be given by Project Co in a lesser period in which case the Contractor shall give a copy to Project Co at the earliest possible opportunity;

4.2.2 keep Project Co fully informed of all steps taken in accordance with paragraph 4.1 of this Part B, and of all documents and other information, given or received in connection therewith and Project Co and its advisers shall be entitled to attend, as a silent observer, any hearing in any relevant dispute resolution procedure.

5 SUBMISSIONS PROCEDURE

5.1 Project Co may, at any time (including requiring the Contractor to cease to Name Borrow), require itself to conduct any negotiations or disputes in relation to any Parallel Issue if, in the sole opinion of Project Co, the aforesaid negotiations or disputes relate to or include, and cannot reasonably be isolated from, any matter which will have a material effect upon Project Co the consequences of which will not be, or are unlikely to be, borne ultimately solely by the Contractor pursuant to this Agreement, in which circumstances the Contractor shall be entitled to make submissions in accordance with paragraphs 5.2 to 5.4 below ("Submissions").

5.2 Where a Project Agreement Parallel Issue arises and the Contractor is not entitled to Name Borrow in accordance with paragraph 5.1 of this Part B it shall subject to paragraphs 5.3 and 5.4 below, be entitled to make submissions in relation to the relevant dispute and:

5.2.1 Project Co shall (acting reasonably) include as part of its submissions made to an adjudicator appointed pursuant to the Project Agreement, or to the court, such submissions as are made by the Contractor;

5.2.2 the Contractor shall ensure that all such submissions are made sufficiently in advance of any time limits for submissions to be made pursuant to the Project Agreement reasonably to enable Project Co to consider and deliver such submissions in accordance with such time limits and ensure that they concern only those matters which relate to the dispute between the Board and Project Co under the Project Agreement.

5.3 Where the Contractor makes Submissions in accordance with paragraph 5.2 above it shall not be allowed access to any document relevant to the issues in dispute between the Board and Project Co unless the document is also relevant to the issues relating to the Dispute under this Agreement and unless and until the Contractor has delivered to Project Co a written undertaking which meets the requirements of paragraph 4.9 of Schedule 20 of the Project Agreement.

5.4 Where pursuant to the Servcies Contract, Project Co allows the Service Provider to Name Borrow (as defined in the Services Contract), the Contractor shall not pursuant to this Agreement be entitled to make Submissions except if and to the extent agreed between the Service Provider and the Contractor, and Project Co shall have no liability to the Contractor of whatsoever nature as a result of any agreement or failure to reach agreement between the Contractor and the Service Provider or the consequences thereof.

6 JOINDER OF DISPUTES UNDER THIS AGREEMENT AND/OR THE SERVICES CONTRACT WHICH ARE RELATED

6.1 Where Project Co is of the opinion that any Services Contract Parallel Issue arises, it may by notice to each of the Contractor and the Service Provider require the Dispute and the Services Contract Related Dispute to be joined in order to achieve a single determination of the connected matters.

6.2 If Project Co exercises a right pursuant to this Agreement or the Servcies Contract to procure the consolidation of the Dispute and any Related Services Contract Dispute:

6.2.1 the powers of the adjudicator who determines such disputes shall include the power to make any directions and all necessary decisions in the same way as if the procedure of the Scottish Courts as to joining one or more defendants or joining co-defendants or third parties was available to the Parties and the Services Provider;

6.2.2 any adjudicator shall make such directions as are necessary in order to deliver its decision in respect of the Dispute and the Related Service Contract Dispute within the lesser of the time periods permitted for the giving of such decisions under this Agreement and the Service Contract, and the adjudicator shall deliver his decision within such time period;

6.2.3 Project Co and the Contractor shall be jointly responsible with the Service Provider for the adjudicator's fees and expenses in respect of the period in which the Dispute is consolidated with the Related Services Contract Dispute in equal shares unless the Adjudicator orders otherwise.

6.3 In the event that an adjudicator in relation to a Related Services Contract Dispute (the "**Related Tribunal**") orders that a Dispute be consolidated with a Related Services Contract Dispute with which the Related Tribunal is dealing, then:

6.3.1 with effect from the time of such order the Adjudicator appointed under this Agreement shall cease to have authority or jurisdiction to determine the dispute which shall instead be determined by the Related Tribunal and the appointment of the Adjudicator ceases, and

6.3.2 such order shall be binding on Project Co and the Contractor and both of them shall acknowledge the appointment of the Related Tribunal as the adjudicator of the Dispute.

7 PARTIES TO CO-OPERATE TO ACHIEVE CONSISTENT DECISIONS

7.1 Without limiting paragraph 3 of this Part B, where any issue arises under this Agreement which raises a Parallel Issue:

7.1.1 the Parties shall use reasonable endeavours and co-operate to procure the appointment of the same adjudicator under the Project Agreement and the Servcies Contract as is appointed under this Agreement in relation to any Dispute arising out of such Parallel Issues;

7.1.2 the Parties shall co-operate with the intention of, and use reasonable endeavours to obtain, the decision of the adjudicator appointed under the Project Agreement prior to the decision being given by the Adjudicator under this Agreement or by the adjudicator under the Services Contract;

7.1.3 the obligation under paragraph 7.1.2 above shall include commencing adjudication proceedings under the Project Agreement, where such proceedings have not already been commenced;

7.1.4 if necessary in order to achieve the intention referred to under paragraph 7.1.2 above, the Parties agree that:

(a) whoever was the party initiating adjudication proceedings in respect of any Dispute will apply to any adjudicator appointed pursuant to this Agreement for an extension of up to 14 days or such longer period as the parties agree is necessary at the relevant time, for the giving of such adjudicator's decision; and

(b) to the extent necessary and consistent with such intention the Parties will resist any application for any extension of time for the giving of the decision by an adjudicator appointed under the Project Agreement;

7.1.5 where the Contractor is given the right to Name Borrow it shall be responsible for discharging Project Co's obligations pursuant to paragraph 7.1.1 to 7.1.4 above insofar as they relate to the proceedings which are the subject of such Name Borrowing.

8 EFFECT OF DECISIONS AT PROJECT AGREEMENT LEVEL OR UNDER THIS AGREEMENT OR THE SERVICES CONTRACT

8.1 Save where pursuant to paragraph 3 of this Part B the Adjudicator appointed under this Agreement gives a decision in respect of a Project Agreement Related Dispute that has been consolidated with a Dispute under this Agreement (a **Project Agreement Related Dispute Decision**) the decision of any adjudicator appointed under the Project Agreement or the Services Contract (as the case may be) shall be binding on Project Co and the Contractor and shall determine the Parties' rights and obligations under this Agreement insofar as such decision determines any Parallel Issue.

8.2 In any adjudication or other dispute resolution procedure envisaged by this Schedule Part 20 (*Dispute Resolution Procedure*) ("**Relevant Tribunal**"), the Relevant Tribunal shall:

8.2.1 determine any Dispute in accordance with this Agreement; and

8.2.2 shall determine the Dispute on a basis which is consistent with paragraph 7.1; and

8.2.3 shall grant overriding precedence to, and reach its decision in accordance with, the requirements of clause 75 (*Overriding Entitlements*) of this Agreement.

9 CONTRACTOR TO INDEMNIFY

9.1 Where the Contractor Name Borrows it shall bear, discharge and indemnify Project Co in respect of all costs, expenses, damages, claims, losses, demands, proceedings and liabilities of whatsoever nature incurred by Project Co, or incurred by the Contractor in the name of Project Co, (including any costs or expenses payable by Project Co to another party to the relevant dispute resolution procedure) in connection with or as a result of the relevant dispute resolution procedure or the decision thereof.

9.2 Where the Contractor makes Submissions it shall indemnify Project Co against:

9.2.1 any costs and expenses (including the Board's costs and expenses) awarded against Project Co to the extent that they relate to or arise in connection with the Contractor's Submissions or which otherwise should be borne by the Contractor, as decided by the adjudicator; and

9.2.2 in the absence of any decision of the adjudicator (as envisaged in paragraph 9.2.1 above) half of any costs and expenses (including any of the Board's

costs and expenses) as are to be borne by Project Co as a result of the adjudication in respect of which Submissions have been made.

10 This Schedule Part 20 (*Dispute Resolution Procedure*)) shall survive termination (for any reason) of the Contractor's employment under this Agreement.

SCHEDULE PART 21

NOT USED

SECTION 1

NOT USED

SECTION 2

NOT USED

SCHEDULE PART 22

CERTIFICATES

Certificate of Practical Completion

Issued by:	Independent Tester – [ ]
Address:	[ ]
Project Co:	**[PROJECT CO]**
Address:	[ ]
Board:	**LOTHIAN HEALTH BOARD**
Address:	[ ].
Contractor:	**[CONTRACTOR]**
Address:	[ ]

Issue date: .....

Works:

Situated at:

Design and Build Agreement dated: .....

Under the terms of the above-mentioned Design and Build Agreement, I/we certify that the Actual Completion Date of the Works was achieved on [ ].

To be signed by or for the issuer named above.

Signed.....

[INDEPENDENT TESTER]

Commissioning Completion Certificate

Issued by:	Independent Tester – [ ]
Address:	[ ]
Hold Co:	**[PROJECT CO]**
Address:	[ ]
Board:	**LOTHIAN HEALTH BOARD**
Address:	[ ]
Contractor:	**[CONTRACTOR]**
Address:	[ ]

Issue date: .....

Works:

Situated at:

Design and Build Agreement dated: .....

Under the terms of the above-mentioned Design and Build Agreement, I/we certify that the Actual Commissioning End Date was achieved on [ ].

To be signed by or for the issuer named above.

Signed.....

[INDEPENDENT TESTER]

Certificate of Making Good Defects

Issued by: Project Co

Address: [ ]

Contractor: CONTRACTOR

Address: [ ]

Issue date:

Works:

Situated at:

Design and Build Agreement dated:

I/We certify that all Defects and relevant damage which the Project Co has notified to the Contractor during the Defects Liability Period pursuant to Clause 17A have been made good.

The issue of this Certificate of Making Good Defects does not in any way affect the rights of the Project Co or the obligations of the Contractor under the Design and Build Agreement including in respect of Defects.

To be signed by or for the issuer named above.

Signed .....

Project Co .....

SCHEDULE PART 23

[NOT USED]

SCHEDULE PART 24

[NOT USED]

SCHEDULE PART 25

[NOT USED]

SCHEDULE PART 26

COMMERCIALLY SENSITIVE INFORMATION

Where information or material falls within more than one category identified in column 1 of the table below, it shall be deemed to fall within the category whose corresponding period of confidentiality identified in column 2 of the table below will expire the soonest.

Category of Information/Material	**Period for which information is to be kept confidential**
Prices within the Catalogue of Small Works and Services	Period during which the relevant prices are applicable
Small Works and Services Rates	Period during which the relevant Small Works and Services Rates are applicable
Project Co bank account information	Project Term
Ancillary Documents	Project Term
Funding Agreements	Project Term
Information about Contractor's processes, methodologies, working methods and information relating to the development of new processes and methodologies which amounts to a trade secret or which, if disclosed, could reasonably be considered to provide a commercial advantage to the Contractor's competitors	Trade secrets – Project Term All other cases – 5 years from the date on which the information produced by the Contractor is delivered by the Project Co to the Board
Breakdown of prices within the overall Contract sum	Project Term
Information on Project Co's costing mechanisms for changes including information obtained from Project Co relating to project risks and pricing of the same and cost information relating to third party contractors and the Sub Contractors	Project Term

Information relating to the appointment of Project Co as the preferred bidder to the Project (including the preferred bidder letter and correspondence and minutes relating to the same).	Until the date falling two (2) years after the Actual Completion Date.
Information contained within or relating to Project Co's bid for the Project except as otherwise listed in this Schedule Part 26 (*Commercially Sensitive Information*) or otherwise provided in the Agreement	Until the date falling two (2) years after the Actual Completion Date

SCHEDULE PART 27

PLANS

Schedule Part 27 (*Plans*) of the Project Agreement is hereby incorporated into, and forms part of, this Agreement.

SCHEDULE PART 28

BOARD POLICIES

The Board Policies are the Board Policies set out below and as set out on the disc in the Agreed Form identified in, and executed as Schedule Part 28 (*Board Policies*) of the Project Agreement referred to in, and forming part of, the Project Agreement which is incorporated into, and forms part of, this Agreement.

Policy Type	Name of Board Policy
Employment	
	Alcohol and substance use
	Dealing positively with stress at work
	Dignity at work
	Facilities Agreement
	Freedom of speech
	Healthcare associated infection: staff screening during incidents and outbreaks
	Management of employee capability
	Management of violence and aggression
	Recruitment guide and Selection Policy
	Social media
	Tobacco policy
	Dress code
Financial	
	Business conduct procedure
Health and Safety	
	Safety Alarm system and emergency response
	Control of contractors
	Fire safety
	First aid
	Health and safety
	Management and control of hot water
	Advance Event Management Policy
	Legionella
	Lone working
	Manual handling
	Pseudomonas
	Waste Disposal
	Window management

Infection Control	
	National Infection Prevention and Control Manual
Information Governance	
	Code of practice on the discharge of functions by public authorities under the Freedom of Information (Scotland) Act 2002
	Confidentiality of personal health information
Business Continuity and Emergency Planning	
	NHSL Reliance – Role and Duties of the Board and Partners
	Business Continuity Tactical Plan: Estates – Hard Facilities Management
Sustainability	
	Carbon management plan
	Sustainable development strategy

SCHEDULE PART 29

PLANNING APPROVAL RESPONSIBILITIES SCHEDULE

Schedule Part 29 (*Planning Approval Responsibilities Schedule*) of the Project Agreement is hereby incorporated into, and forms part of, this Agreement. All references to "Project Co" in Schedule Part 29 (*Planning Approval Responsibilities Schedule*) of the Project Agreement shall be deemed to be references to "the Contractor".

SCHEDULE PART 30

BOARD ENABLING WORKS

SECTION 1

BOARD ENABLING WORKS

"**Flood Protection Enabling Works**" means the works being separately procured by the Board to meet current flood design criteria for hospitals expressed as a 1:1000 year flood event at the Campus Site.

"**Link Building Enabling Works**" means the works being separately procured by the Board to create a new build extension to the RIE Facilities to allow the Facilities to tie into the existing RIE Facilities at ground and first floor levels.

"**PTS Enabling Works**" means the works being separately procured by the Board in relation to the provision of the power requirements for the PTS as follows:

(1) to supply, install and commission the cable and the 8 way (three phase & neutral) distribution board to the second floor plantroom to be fed from section board (spare way reference 52C/1L); and

(2) to supply, install and commission the cable and the switched fused connection unit fed from distribution board reference DB-6-2 D-A to the ground floor pharmacy department within the RIE Facilities.

"**Sewer Diversions Enabling Works**" means the works being separately procured by the Board to clear as far as is possible the Site of existing sewers (namely the Little France/Niddrie Sewer and the South Eastern Relief Sewer) for the construction of the Facilities. New sewers are to be 1050mm and 1200mm diameter and shall comprise precast concrete pipes.

"**Services Diversions Enabling Works**" means the works being separately procured by the Board to divert all live services serving the RIE Facilities, and which are under the Site to a location outwith the Site.

In respect of electric, data and gas services and sewer pipes any services which are diverted, any apparatus, pipes, or other service media which is redundant may be left in the Site provided it is disconnected, non functioning and redundant and left in a safe condition so that it may be safely removed by the Contractor.

Element of Enabling Works	Completion Date
Flood Protection Enabling Works	31 March 2015
Link Building Enabling Works	31 March 2015
Sewer Diversions Enabling Works	31 May 2014
Services Diversion Enabling Works	31 March 2015
PTS Enabling Works	31 July 2015

SECTION 2

BOARD NEIGHBOURING WORKS

"**Link Building Temporary Compound Removal**" means the works being separately procured by the Board to remove all temporary site compound related items adjacent to the Link Building to allow formation of the temporary ambulance drop off as part of Project Co Interface Proposals and activities.

"**Reconfiguration of RIE Facilities A&E Entrances**" means the works being separately procured by the Board to re-site the RIE Facilities A&E entrance to suit temporary ambulance drop off area.

"**A&E New Ambulant Road Works**" means the works being separately procured by the Board to form a new access road from Little France Crescent adjacent to Little France Drive, to the existing RIE Facilities ambulance drop off area.

"**MRI / Endoscopy Works**" means the works separately procured by the Board that shall form a new facility on the west elevation of the RIE Facility on Little France Crescent attached to and within the RIE Facilities.

Element of Neighbouring Works	Completion Date
Link Building Temporary Compound Removal	23 January 2015
Reconfiguaration of RIE Facilities A&E Entrances	9 March 2015
A&E New Ambulant Road Works	2 March 2015
MRI / Endoscopy Works	6 June 2016

SCHEDULE PART 31

CONSORT INTERFACE WITH CAMPUS SITE AND/OR CAMPUS FACILITIES

Schedule Part 31 of the Project Agreement is hereby incorporated into, and becomes part of, this Agreement and shall apply to the Contractor and to the Contractor Parties during the Construction Operations as if the references therein to "Project Co" were references to the Contractor and the references therein to a "Project Co Party" were references to a Contractor Party.

SCHEDULE PART 32

COMMUNITY BENEFITS

SECTION 1

BOARD'S COMMUNITY BENEFITS REQUIREMENTS

1. THE BOARD'S COMMUNITY BENEFITS REQUIREMENTS

1.1 Targeted Recruitment & Training/Employment and Skills Plan

The Contractor shall ensure to meet the following required outputs and volumes in respect of recruitment, training and employment skills during the Construction Phase:

Recruitment, Training and Employment Skills Outputs and Volumes	
Work Placement (16-19 years)	16
Work Placement (14-16 years)	4
Curriculum support activities	14
Graduates	3
Apprentice starts	11
Existing apprentices	10
Apprentice completions	3
Jobs advertised through local employment vehicles	7
N/SVQ starts for subcontractors	21
N/SVQ completions for subcontractors	18
Training Plans for subcontractors	5
Supervisor training for subcontractors	10
Leadership and management training for subcontractors	9
Advanced health and safety training for subcontractors	11

1.2 Supply Chain Development: SMEs

The Contractor shall during the Construction Phase:

1.2.1 advertise all relevant subcontracts to be agreed with Project Co, with reference to Project Co's Community Benefits Method Statements; and

1.2.2 allow SMEs equal opportunities to tender provided they have the appropriate capacity, experience and financial standing (and without leading to discrimination against others in the market).

1.3 Supply Chain Development: Social Enterprises

The Contractor shall during the Construction Phase:

1.3.1 advertise all relevant subcontracts to be agreed with the Project Co with reference to Project Co's Community Benefits Method Statements; and

1.3.2 allow Social Enterprises equal opportunities to tender provided they have the appropriate capacity, experience and financial standing (and without leading to discrimination against others in the market).

1.4 Other Community Benefits

The Contractor shall set out any additional community benefits that the Contractor shall be willing to provide at no additional cost to the Board or Project Co over the Construction Phase, such as the Contractor:

1.4.1 undertaking educational initiatives with community, voluntary and charitable organisations relevant to the Project and not falling under paragraphs 1.1 and 1.2 above; or

1.4.2 supporting or contributing in some other way to the work of community, voluntary and charitable organisations associated with the Project.

1.5 **General Board Community Benefits Requirements**

1.5.1 **Monitoring**

The Contractor shall provide monitoring information in respect of the Board's Community Benefits Requirements at least quarterly during the Construction Phase, as against the ESP and commitments made in the Community Benefits Method Statements in a format to be agreed with the Project Co.

1.5.2 **Insurances**

The Contractor shall ensure that any insurance cover includes people aged 16 and over and staff from employment and training organisations when on work experience at the Site and/or Off Site in relation to the Works.

1.6 **Employment and Skills Plan: Construction Phase and Operational Term**

In respect of the Construction Phase, the Contractor shall complete an Employment and Skills Plan ("**ESP**") covering the employment and skills areas, as set out in table one below.

The benchmarks for the Construction Phase are set out in paragraph 1.1 above and shall constitute the minimum outputs for the Contractor's ESP.

The Contractor shall provide an unequivocal statement alongside their ESP for the Construction Phase that the Contractor shall be contractually bound to deliver against what they have set out in the ESP, in accordance with the terms and conditions set out in Clause 73 *(Community Benefits)* of this Agreement.

The Contractor shall complete:

1.6.1 the ESP as set out in table 1 below, containing detail at monthly intervals during the Construction Phase;

1.6.2 its own plan relating to employment and skills as detailed within Project Co's Community Benefits Method Statements.

Table 1

TEMPLATE EMPLOYMENT AND SKILLS PLAN (ESP) FOR CONSTRUCTION PHASE														
	Employment and Skills areas	**Month 1**	**Month 2**	**Month 3**	**Month 4**	**Month 5**	**Month 6**	**Month 7**	**Month 8**	**Month 9**	**Month 10**	**Month 11**	**Month 12**	**Summ No**
1.	Work Placement (16-19 years) – persons													16
2.	Work Placement (14-16 years) – persons													4
3.	Curriculum Support Activities – individual engagement													14
4.	Graduates – persons													3
5.	Apprentice Starts - persons													11
6.	Existing apprentices - persons													10
7.	Apprentice Completions - persons													3
8.	Jobs Advertised Through proximate Employment Vehicles - number													7
9.	N/SVQ Starts for Subcontractors - persons													21
10.	N/SVQ Completions for Subcontractors - persons													18
11.	Training Plans for Subcontractors - number													5
12.	Supervisor Training for Subcontractors - persons													10
13.	Leadership and Management Training for Subcontractors - persons													9
14.	Advanced Health and Safety Training for Subcontractors - persons													11

2. Project Co's Community Benefits Method Statements

2.1 Employment and Skills Method Statement

The Contractor shall comply with the Project Co Community Benefits Method Statement which sets out how Project Co intends to implement the employment and training requirements of the Board, deliver the ESP during the Construction Phase.

2.2 Supply Chain Development: SMEs and Social Enterprise

The Contractor shall comply with the two separate Community Benefits Method Statements which detail what Project Co proposes to do to meet the Board's SME and Social Enterprise supplier development objectives in respect of the Construction Phase.

2.3 Other Community Benefit

The Contractor shall comply with the Project Co Community Benefits Method Statement which sets out any other Community Benefits that Project Co is willing to provide.

SECTION 2

PROJECT CO'S COMMUNITY BENEFITS METHOD STATEMENTS

Section 2 of Schedule Part 32 of the Project Agreement and Appendix 1 (*Appendices to the Project Co's Community Benefits Method Statements*) as set out on the disc in the Agreed Form identified and executed as the Appendix 1 (*Appendices to the Project Co's Community Benefits Method Statements*) of Section 2 (*Project Co's Community Benefits Method Statements*) of Schedule Part 32 (*Community Benefits*) of the Project Agreement are hereby incorporated into, and become part of, this Agreement and the Contractor shall perform the obligations of Project Co listed therein for the period from commencement of this Agreement up to and including the Actual Completion Date.

SECTION 3

AMOUNTS DUE BY THE CONTRACTOR TO PROJECT CO PER DEFAULT IN RELATION TO THE WORKS PURSUANT TO CLAUSE 73.2 *(COMMUNITY BENEFITS)*

Employment and Skills Plan			
Issue	**Activity**	**Target**	**Amounts due by Contractor to the Project Co**
	Educational Support (10%)	**Target**	**Amounts due by Contractor to the Project Co for each work placement and/or curriculum support activity not provided**
1.	Work Placement (16 – 19 years)	25	£463
2.	Work Placement (14 – 16 years)	9	£472
3.	Curriculum Support Activities	20	£463
	Total	**54**	
	Jobs (60%)	**Target**	**Amounts due by Contractor to the Project Co for each new entrants jobs, new graduate jobs and/or new apprenticeship jobs not provided**
4.	New Entrant	53	£342
5.	Graduate	3	£342
6.	Apprenticeship Starts	17	£342
	Total	**73**	
	Training (30%)	**Target**	**Amounts due by Contractor to the Project Co per NVQ start, NVQ completions, training plans, supervisor training sessions, leadership training sessions and**

			advanced health and safety sessions not provided
7.	NVQ Starts	34	£162
8.	NVQ Completions	36	£160
9.	Training Plans	14	£179
10.	Supervisor Training sessions	25	£150
11.	Leadership Training sessions	21	£167
12.	Advanced Health and Safety sessions	24	£167
	Total	**154**	

SME and Social Enterprise			
Issue	**Activity**	**Target**	**Amounts due by Contractor to the Project Co per work package not advertised and meet the buyer event and "capacity building workshop" not provided**
13.	Capability Building Workshops (40%)	4	£2,500
14.	Advertising Packages (40%)	50%	£5,000
15.	Meet the Buyer Events (20%)	3	£2,500

Clause 73.2.4			
Issue	**Activity**	**Target**	**Amounts due by Contractor to the Project Co per non-provision of the quarterly information**
16.	Quarterly report	27	£555

SCHEDULE PART 33

LIQUIDATED DAMAGES

[Delay LDs Relief Event LDs FM LDs]

PART A

Liquidated damages for delay (Clause 17B.2(a)): forty one thousand two hundred and nineteen pounds (£41,219) per day

Relief Event Liquidated Damages (Clause 30.10): forty one thousand two hundred and nineteen pounds (£41,219) per day

Force Majeure Liquidated Damages (Clause 31.8A): forty one thousand two hundred and nineteen pounds (£41,219) per day

PART B

The Liquidated Damages Cap shall be equal to twenty two million five hundred and eighty eight thousand and twelve pounds (£22,588,012)[3]

[3] Being 365 + 183 days x the daily rate in Part A above.

SCHEDULE PART 34

FORM OF PERFORMANCE BOND

THIS PERFORMANCE BOND is made as a deed this day of

BETWEEN

(1) [●] (company registration No.[●]) whose registered office is at [●] (the "**Guarantor**"); and

(2) [●] (company registration No.[●]) whose registered office is at [●] (the "**Employer**"); and

(3) [●] (company registration No.[●]) whose registered office is at [●] (the "**Contractor**").

RECITALS

(A) By a building contract dated [●] between the Employer and the Contractor (the **Contract**) particulars of which are set out in SCHEDULE 1 the Contractor has agreed with the Employer to design, construct, complete and commission the works upon and subject to the terms and conditions therein set out (the **Works**).

(B) The Guarantor has agreed with the Employer at the request of the Contractor to guarantee the performance of the obligations of the Contractor under the Contract upon the terms and conditions of this Performance Bond subject to the limitations set out in Clauses 15 and 17 below.

THE PARTIES agree as follows:

1. DEFINITIONS

Unless the context otherwise requires, the following words and phrases shall have the meanings given below:

"**Adjudication Procedure**" means the procedure for adjudication set out in the Contract;

"**Adjudicator**" has the meaning ascribed to it in the Contract;

"**Bond Amount**" means the sum of £[●];

"**Business Day**" means a day (other than a Saturday or a Sunday) on which banks are open for domestic business in the City of London;

"**Expiry Date**" means the date of issue of the Certificate of Making Good Defects for the Works under the Contract;

"**Funders' Direct Agreement with the Contractor**" has the meaning given in the Contract;

"**Insolvency Event**" means the occurrence of an event in respect of the Contractor as set out in Clause 40.1.1 (*Insolvency*) of the Contract;

"**Parent Company**" means Brookfield Multiplex Pty Limited; and

"**Parent Company Guarantee**" means the company guarantee entered into by the Parent Company in favour of the Employer in respect of the Contractor's obligations under the Contract.

2. In consideration of the Employer accepting the Guarantor's obligations herein contained in the discharge of the Contractor's obligation to procure a performance bond under the Contract, the Guarantor unconditionally and irrevocably guarantees to the Employer as a continuing

guarantee the due, proper and punctual performance by the Contractor of all the terms, conditions, obligations and agreements on the part of the Contractor contained in the Contract (including, without limitation, the payment of moneys due and payable by the Contractor thereunder) (the "**Guaranteed Obligations**") and undertakes that in the event of a breach by the Contractor of the Guaranteed Obligations (a "**Contractor Default**"), or the occurrence of an Insolvency Event, or the termination of the Contract due to a Contractor Event of Default (as defined under the Contract) ("**Relevant Termination**"), then, the Guarantor shall, subject to the provisions of this Performance Bond, satisfy and discharge from time to time any and all losses and damages sustained by the Employer and payments due from the Contractor as established and ascertained pursuant to and in accordance with the provisions of or by reference to the Contract:

(a) without the Guarantor being entitled or obliged to make any enquiry of the Employer;

(b) notwithstanding any objection that may be raised by the Contractor or any other third party or any other security or guarantee that may be available to the Employer;

(c) without any proof or conditions (other than those required to be evidenced under Clauses 3 and 5 below, as appropriate);

(d) without any right of set-off or counterclaim; and

(e) within the timescales set out in this Performance Bond.

For the avoidance of doubt and without limiting the foregoing, if any Insolvency Event (as defined in the Contract) occurs in relation to the Contractor and the Employer exercises all or any of its rights under clause 40.3.1 (*Project Co's options*) of the Contract then the Guarantor shall, subject to the provisions of this Performance Bond, satisfy and discharge the losses and damages sustained by the Employer, and the obligations of the Contractor arising, as a consequence of the Employer exercising its rights under clause 40.3.1 (*Project Co's options*) of the Contract.

3. The Employer shall be entitled from time to time to make a written demand upon the Guarantor for payment under this Performance Bond which demand shall be accompanied by a certificate of the Employer signed by a director or other duly authorised officer of the Employer stating that:

(a) an amount as specified in the certificate has become immediately due and payable by the Contractor to the Employer in accordance with or arising from the Contract and the Employer has attached to the certificate a solicitor's certified copy of the Adjudicator's award or decision ("**Award**") or of a judgment of any competent court ("**Judgment**") in respect thereof; and

(b) the Employer has made written demand on the Contractor and the Parent Company for payment of such amount; and

(c) as at the date of the certificate, the Contractor and the Parent Company have failed to pay such amount in full to the Employer.

4. Without prejudice to Clause 11 or Clause 15 below the Guarantor irrevocably and unconditionally undertakes, upon a claim being presented in accordance with paragraph 3 above, and without any further proof by the Employer to pay directly to the Employer, within 3 Business Days, the sum stated in the Award or Judgment and stated in the accompanying certificate as being payable up to an aggregate limit in respect of all such claims equal to the Bond Amount. The Guarantor shall pay the sum so certified by the Employer without challenge on any grounds and receipt by the Guarantor of such certificate shall, without prejudice to the operation of Clauses 11, 12 and 13 below, be accepted by the Guarantor as conclusive evidence of the Guarantor's liability to pay the amount claimed under this Clause 4.

5. Save where there is an existing Award or Judgment (in which case the provisions of Clause 3 above shall apply in respect of any demand made under this Performance Bond in connection with any such Award or Judgment), in the event of an Insolvency Event in respect of the Contractor, the Employer shall be entitled from time to time to make a written demand upon the Guarantor for payment under this Performance Bond stating:

   (a) that there has been an Insolvency Event;

   (b) that the Employer has suffered (or reasonably anticipates that it will suffer) loss (including interest), damage, expense and/or cost as a consequence of the Insolvency Event; and

   (c) the amount claimed by the Employer as a consequence of the Insolvency Event,

   and the Employer shall provide such information and copies of such documents (if applicable) in support of such claim as the Guarantor may reasonably require in order to properly assess such claim.

6. Following receipt of a written demand made by the Employer in accordance with Clause 5 above, if the Guarantor:

   (a) agrees or is deemed pursuant to Clause 7 to agree the amount claimed by the Employer, then the Guarantor shall pay to the Employer the amount so claimed to the extent that such amount together with the amount(s) of any previous payment(s) by the Guarantor to the Employer under this Performance Bond does not in the aggregate exceed the Bond Amount; and

   (b) objects to the amount claimed by the Employer and/or to the quality or extent of the information and/or copy documentation that the Employer has provided in support of such claim, then the Guarantor shall notify the Employer in writing of its objection to the amount so claimed within 2 Business Days of receipt of the Employer's written demand giving reasons therefor.

7. If within 2 Business Days the Guarantor fails to object to the amount claimed by the Employer in accordance with Clause 6(a), then it shall be deemed to have agreed to such amount.

8. Subject to Clause 7, following the occurrence of an Insolvency Event, the Employer shall be entitled to refer any difference or dispute as to the Guarantor's written objection made pursuant to Clause 6(b) for resolution in accordance with the Contract Dispute Resolution Procedure. Save that:

   (a) all references in such Contract Dispute Resolution Procedure or in such proceedings to the "parties" shall be deemed to be references to the Employer and the Guarantor or either of them as the context may require;

   (b) all references to the **Contractor** shall be deemed to be references to the Guarantor; and

   (c) the adjudicator shall not be entitled to decide (without fettering the discretion or powers of the adjudicator) that he does not have jurisdiction in relation to the dispute on the grounds that a stay of proceedings would or could have been made in relation to any analogous adjudication proceedings under the Contract Dispute Resolution Procedure.

9. Payment under Clause 6(a) shall be made within 3 Business Days of the Guarantor's agreement or deemed agreement under Clause 7 to the amount claimed by the Employer's written demand under Clause 5. Payment of any amount determined to be due to the Employer from the Guarantor under Clause 8 shall be made within 3 Business Days of such determination or within such other period as such determination may provide.

10. Subject to Clause 11 below, all sums payable under this Performance Bond will be made in Pounds Sterling to such account in London as may be specified in that requirement for payment and shall be paid without challenge on any grounds and without set-off, withholding, counterclaim or deduction of any nature. If the Guarantor is required by law to make any deduction or withholding, the Guarantor will gross up the payment so that the net sum received by the Employer will be equal to the full amount which the Employer would have received had no deduction or withholding been made.

11. Payment of any claim shall not prejudice the rights of either the Employer or the Contractor or the Guarantor to refer for final determination by arbitration under the Contract or by the cCcourts (as the case may be) any decision of the Adjudicator.

12. In the event that it is subsequently determined by arbitration under the Contract or by the courts that the Guarantor made an overpayment as a consequence of the determination by the Adjudicator under the Adjudication Procedure then the excess shall be refunded in accordance with clause 5.8.2 of the Contract and, following such refund, for the purposes of determining the Bond Amount, the amount of such overpayment shall be treated as if it had not been called under the terms of this Performance Bond.

13. In the event that it is subsequently determined under the Contract that the Guarantor made an underpayment as a consequence of the determination by the Adjudicator under the Adjudication Procedure then the Employer shall be entitled to proceed under Clause 3 in respect of the shortfall.

14. Subject always to Clause 12, the amounts payable under this Performance Bond shall include (without limitation) any debt or other sum payable by the Contractor to the Employer under the Contract following an Insolvency Event in respect of the Contractor.

15. The maximum aggregate liability of the Guarantor and the Contractor under this Performance Bond shall not exceed the Bond Amount, provided that the liability of the Guarantor under this Performance Bond shall be co-extensive with the liability of the Contractor under the Contract. There shall be no maximum applicable to the amount payable in relation to any rights or remedies which the Employer may have arising from any breach by the Guarantor of the terms of this Performance Bond.

16. The Guarantor shall not be discharged nor shall its liability be affected by any of the following:

    (a) any amendment, modification, or variation, express or implied, to the scope of the Works in accordance with the Contract, in each case as so amended, modified or varied shall be guaranteed under this Performance Bond as if they were obligations under the Contract at the date hereof;

    (b) the granting of any extensions of time or forbearance, forgiveness or indulgences in relation to time of the Contractor;

    (c) any additional or advance payment, waiver, consent, forbearance or concession to the Contractor;

    (d) the enforcement, absence of enforcement or release of the Contractor of any security, right of action or other guarantee or indemnity;

    (e) the dissolution, amalgamation, reconstruction, or re-organisation of the Contractor or any other person;

    (f) the illegality, invalidity or unenforceability of or any defect in any provision of the Contract;

    (g) any dispute or disagreement whatsoever between the Contractor and the Employer under or in relation to the Contract;

(h) any failure of supervision to detect or prevent any fault of the Contractor;

(i) any valid assignation of the benefit of the Contract;

(j) any change in the constitution or organisation of the Contractor;

(k) the insolvency, bankruptcy, winding-up or re-organisation of the Contractor or the Parent Company;

(l) any other bond, security or guarantee now or hereafter held by the Employer for all or any part of the obligations of the Contractor under the Contract or the release or waiver of any such bond, security or guarantee;

(m) without prejudice to the rights of the Contractor arising therefrom any breach by the Employer of any terms of the Contract;

(n) any legal limitation, disability, incapacity or other circumstance relating to the Contractor;

(o) any other act omission, matter or thing by which (but for this provision) the Contractor or Guarantor would be exonerated either wholly or in part from performance in relation to this Performance Bond other than a release expressly made or agreed to by the Employer in writing; or

(p) subject to Clause 5 above, termination of the Contract or of the Contractor's employment thereunder (whether on the grounds of an Insolvency Event or otherwise).

17. Whether or not this Performance Bond shall be returned to the Guarantor the obligations of the Guarantor under this Performance Bond shall be released and discharged absolutely upon the Expiry Date save in respect of any claim in writing containing particulars of the grounds on which such claim is founded which has been made upon the Guarantor before the Expiry Date.

18. The Contractor having requested the execution of this Performance Bond by the Guarantor undertakes to the Guarantor (without limitation of any other rights and remedies of the Employer or the Guarantor against the Contractor) to perform and discharge the obligations on its part set out in the Contract.

19. If either the Employer or the Guarantor disagrees with a decision made by an Adjudicator under the Adjudication Procedure made prior to the Insolvency Event occurring in respect of the Contractor, that party shall be entitled to refer the relevant matter to the courts of Scotland which shall have non-exclusive jurisdiction to determine the rights of the parties in respect of such dispute and, unless the Employer and the Guarantor otherwise agree in writing, the liability (if any) of the Guarantor to the Employer under this Performance Bond in respect of the relevant matter shall thereafter be determined exclusively by a competent court (and not by reference to the dispute resolution procedure in the Contract) and if the competent court shall determine that an overpayment or underpayment has previously been made by the Guarantor, the terms of Clause 8 or Clause 9 above, shall apply.

20. The Employer may transfer, assign or charge the benefit of this Performance Bond to any party acquiring an interest in the Contract and/or providing finance in respect of the Works or taking an assignation of the Contract, including any transferee appointed under the Funders' Direct Agreement with the Contractor. The Employer shall notify the Guarantor of any such assignation. The Guarantor may not assign, charge or transfer this Performance Bond.

21. This Performance Bond is in addition to and not in substitution for any present and future guarantee, lien or other security held by the Employer in respect of the Contractor's obligations under the Contract.

22. Any notice, claim, certificate, request or other document required to be served under this Performance Bond must be in writing and must be served by hand or by express courier or recorded delivery at the addresses stated in SCHEDULE 1 or such other alternative address for service as any of the Parties may notify to the other Parties in writing from time to time. Service shall take effect, if given by hand, on the date of delivery. If given by express courier or recorded delivery, it shall take effect on the date of delivery to the recipient (or if the date of delivery is not a Business Day or during regular business hours, then on the next Business Day thereafter).

23. No failure by the Employer to exercise or delay by the Employer in exercising any right or remedy shall operate as a waiver, nor shall any single or partial exercise or waiver of any right or remedy preclude its further exercise or the exercise of any other right or remedy. A waiver given or consent granted by the Employer under this Performance Bond will be effective only if given in writing and only in the instance and for the purpose for which it is given.

24. If at any time any one or more of the provisions of this Performance Bond is or becomes invalid, illegal or unenforceable in any respect under any law of any jurisdiction, the validity, legality and enforceability of the remaining provisions hereof shall not be in any way affected or impaired.

25. This Performance Bond and any non-contractual obligations arising out of or in connection with it shall be governed by and construed in accordance with the laws of Scotland and the non-exclusive jurisdiction of the courts of Scotland in relation to disputes arising hereunder.

26. Save to the extent expressly provided in this Performance Bond and, to avoid doubt, without prejudice to the terms of the Funders' Direct Agreement with the Contractor or the rights of any permitted successor to the rights of the Employer or of any permitted assignee, it is expressly declared that no rights shall be conferred under and arising out of this Performance Bond upon any person other than the Contractor and the Employer and without prejudice to the generality of the foregoing, there shall not be created by this Performance Bond a jus quaesitum tertio in favour of any person whatsoever.

EXECUTED AS A DEED by the parties or their duly authorised representatives on the date of this Deed.

SCHEDULE 1

THIS PERFORMANCE BOND is made as a deed this day of

BETWEEN

(1) [●] (company registration No.[●]) whose registered office is at [●] (the "**Guarantor**"); and

(2) [●] (company registration No. [●]) whose registered office is at [●] (the "**Employer**"); and

(3) [●] (company registration No.[●]) whose registered office is at [●] (the "**Contractor**").

RECITALS

(A) By a building contract dated [●] between the Employer and the Contractor (the **Contract**) particulars of which are set out in SCHEDULE 1 the Contractor has agreed with the Employer to design, construct, complete and commission the works upon and subject to the terms and conditions therein set out (the **Works**).

(B) The Guarantor has agreed with the Employer at the request of the Contractor to guarantee the performance of the obligations of the Contractor under the Contract upon the terms and conditions of this Performance Bond subject to the limitations set out in Clauses 11 and 13 below.

THE PARTIES agree as follows:

1. DEFINITIONS

Unless the context otherwise requires, the following words and phrases shall have the meanings given below:

"**Adjudication Procedure**" means the procedure for adjudication set out in the Contract;

"**Adjudicator**" has the meaning ascribed to it in the Contract;

"**Bond Amount**" means the sum of £[●];

"**Business Day**" means a day (other than a Saturday or a Sunday) on which banks are open for domestic business in the City of London;

"**Expiry Date**" means the date of issue of the Certificate of Making Good Defects for the Works under the Contract;

"**Funders' Direct Agreement with the Contractor**" has the menaing given in the Contract;

"**Insolvency Event**" means the occurrence of an event in respect of the Contractor as set out in Clause 40.1.1 (*Insolvency*) of the Contract;

"**Parent Company**" means Brookfield Multiplex Pty Limited; and

"**Parent Company Guarantee**" means the company guarantee entered into by the Parent Company in favour of the Employer in respect of the Contractor's obligations under the Contract.

2. In consideration of the Employer accepting the Guarantor's obligations herein contained in the discharge of the Contractor's obligation to procure a performance bond under the Contract, the Guarantor unconditionally and irrevocably guarantees to the Employer as a continuing guarantee the due, proper and punctual performance by the Contractor of all the terms, conditions, obligations and agreements on the part of the Contractor contained in the Contract (including, without limitation, the payment of moneys due and payable by the Contractor

thereunder) (the "**Guaranteed Obligations**") and undertakes that in the event of a breach by the Contractor of the Guaranteed Obligations (a "**Contractor Default**"), or the occurrence of an Insolvency Event, or the termination of the Contract due to a Contractor Event of Default (as defined under the Contract) ("**Relevant Termination**"), then, the Guarantor shall, subject to the provisions of this Performance Bond, satisfy and discharge from time to time any and all losses and damages sustained by the Employer and payments due from the Contractor as established and ascertained pursuant to and in accordance with the provisions of or by reference to the Contract:

(a) without the Guarantor being entitled or obliged to make any enquiry of the Employer;

(b) notwithstanding any objection that may be raised by the Contractor or any other third party or any other security or guarantee that may be available to the Employer;

(c) without any proof or conditions (other than those required to be evidenced under Clause 3 below, as appropriate);

(d) without any right of set-off or counterclaim; and

(e) within the timescales set out in this Performance Bond.

For the avoidance of doubt and without limiting the foregoing, if any Insolvency Event occurs in relation to the Contractor and the Employer exercises all or any of its rights under clause 40.3.1 (*Project Co's options*) of the Contract then the Guarantor shall, subject to the provisions of this Performance Bond, satisfy and discharge the losses and damages sustained by the Employer, and the obligations of the Contractor arising, as a consequence of the Employer exercising its rights under clause 40.3.1 (*Project Co's options*) of the Contract.

3. The Employer shall be entitled from time to time to make a written demand upon the Guarantor for payment under this Performance Bond which demand shall be accompanied by a certificate of the Employer signed by a director or other duly authorised officer of the Employer stating that:

(a) an amount as specified in the certificate has become immediately due and payable by the Contractor to the Employer in accordance with or arising from the Contract and the Employer has attached to the certificate a solicitor's certified copy of the Adjudicator's award or decision ("**Award**") or of a judgment of any competent court ("**Judgment**") in respect thereof; and

(b) the Employer has made written demand on the Contractor and the Parent Company for payment of such amount; and

(c) as at the date of the certificate the Contractor and the Parent Company have failed to pay such amount in full to the Employer.

4. Without prejudice to Clause 8 or Clause 12 below the Guarantor irrevocably and unconditionally undertakes, upon a claim being presented in accordance with paragraph 3 above, and without any further proof by the Employer to pay directly to the Employer, within 3 Business Days, the sum stated in the Award or Judgment and stated in the accompanying certificate as being payable up to an aggregate limit in respect of all such claims equal to the Bond Amount. The Guarantor shall pay the sum so certified by the Employer without challenge on any grounds and receipt by the Guarantor of such certificate shall, without prejudice to the operation of Clauses 8, 9 and 10 below, be accepted by the Guarantor as conclusive evidence of the Guarantor's liability to pay the amount claimed under this Clause 4.

5. In the event of an Insolvency Event in respect of the Contractor, a failure by the Contractor to pay moneys due under the Contract to the Employer (a "**Non-Payment Event**"), or a Relevant Termination, the Employer shall be entitled from time to time to make a written demand upon the Guarantor for payment under this Performance Bond stating:

(a) that there has been an Insolvency Event, Non-Payment Event or a Relevant Termination;

(b) that the Employer has suffered (or reasonably anticipates that it will suffer) loss (including interest), damage, expense and/or cost as a consequence of the Insolvency Event Non-Payment Event or a Relevant Termination; and

(c) the amount claimed by the Employer as a consequence of the Insolvency Event, Non-Payment Event or a Relevant Termination.

Following receipt of a written demand made by the Employer in accordance with Clause 5 above the Guarantor shall pay the amount claimed within 3 Business Days from the date of the delivery of the written demand to the Guarantor.

6. Subject to Clause 7 below, all sums payable under this Performance Bond will be made in Pounds Sterling to such account in London as may be specified in that requirement for payment and shall be paid without challenge on any grounds and without set-off, withholding, counterclaim or deduction of any nature. If the Guarantor is required by law to make any deduction or withholding, the Guarantor will gross up the payment so that the net sum received by the Employer will be equal to the full amount which the Employer would have received had no deduction or withholding been made.

7. Payment of any claim under Clause 4 shall not prejudice the rights of either the Employer or the Contractor or the Guarantor to refer for final determination by arbitration under the Contract or by the courts (as the case may be) any decision of the Adjudicator.

8. In the event that it is subsequently determined by arbitration under the Contract or by the courts that the Guarantor made an overpayment as a consequence of the determination by the Adjudicator under the Adjudication Procedure then the excess shall be refunded in accordance with clause 5.8.2 of the Contract and, following such refund, for the purposes of determining the Bond Amount, the amount of such overpayment shall be treated as if it had not been called under the terms of this Performance Bond.

9. In the event that it is subsequently determined under the Contract that the Guarantor made an underpayment as a consequence of the determination by the Adjudicator under the Adjudication Procedure then the Employer will be entitled to proceed in accordance with Clause 3 or 5 (as the case may be) in respect of the shortfall.

10. Subject always to Clause 13, the amounts payable under this Performance Bond shall include (without limitation) any debt or other sum payable by the Contractor to the Employer under the Contract following an Insolvency Event in respect of the Contractor.

11. The maximum aggregate liability of the Guarantor and the Contractor under this Performance Bond shall not exceed the Bond Amount, provided that the liability of the Guarantor under this Performance Bond shall be co-extensive with the liability of the Contractor under the Contract. There shall be no maximum applicable to the amount payable in relation to any rights or remedies which the Employer may have arising from any breach by the Guarantor of the terms of this Performance Bond.

12. The Guarantor shall not be discharged nor shall its liability be affected by any of the following:

(a) any amendment, modification, or variation, express or implied, to the scope of the Works in accordance with the Contract, in each case as so amended, modified or varied shall be guaranteed under this Performance Bond as if they were obligations under the Contract at the date hereof;

(b) the granting of any extensions of time or forbearance, forgiveness or indulgences in relation to time of the Contractor;

(c) any additional or advance payment, waiver, consent, forbearance or concession to the Contractor;

(d) the enforcement, absence of enforcement or release of the Contractor of any security, right of action or other guarantee or indemnity;

(e) the dissolution, amalgamation, reconstruction, or re-organisation of the Contractor or any other person;

(f) the illegality, invalidity or unenforceability of or any defect in any provision of the Contract;

(g) any dispute or disagreement whatsoever between the Contractor and the Employer under or in relation to the Contract;

(h) any failure of supervision to detect or prevent any fault of the Contractor;

(i) any valid assignation of the benefit of the Contract;

(j) any change in the constitution or organisation of the Contractor;

(k) the insolvency, bankruptcy, winding-up or re-organisation of the Contractor or the Parent Company;

(l) any other bond, security or guarantee now or hereafter held by the Employer for all or any part of the obligations of the Contractor under the Contract or the release or waiver of any such bond, security or guarantee;

(m) without prejudice to the rights of the Contractor arising therefrom any breach by the Employer of any terms of the Contract;

(n) any legal limitation, disability, incapacity or other circumstance relating to the Contractor;

(o) any other act omission, matter or thing by which (but for this provision) the Contractor or Guarantor would be exonerated either wholly or in part from performance in relation to this Performance Bond other than a release expressly made or agreed to by the Employer in writing; or

(p) subject to Clause 5 above, termination of the Contract or of the Contractor's employment thereunder (whether on the grounds of an Insolvency Event or otherwise).

13. Whether or not this Performance Bond shall be returned to the Guarantor the obligations of the Guarantor under this Performance Bond shall be released and discharged absolutely upon the Expiry Date save in respect of any claim in writing containing particulars of the grounds on which such claim is founded which has been made upon the Guarantor before the Expiry Date.

14. The Contractor having requested the execution of this Performance Bond by the Guarantor undertakes to the Guarantor (without limitation of any other rights and remedies of the Employer or the Guarantor against the Contractor) to perform and discharge the obligations on its part set out in the Contract.

15. The Employer may transfer, assign or charge the benefit of this Performance Bond to any party acquiring an interest in the Contract and/or providing finance in respect of the Works or taking an assignation of the Contract, including any transferee appointed under the Funders' Direct Agreement. The Employer shall notify the Guarantor of any such assignation. The Guarantor may not assign, charge or transfer this Performance Bond.

16. This Performance Bond is in addition to and not in substitution for any present and future guarantee, lien or other security held by the Employer in respect of the Contractor's obligations under the Contract.

17. Any notice, claim, certificate, request or other document required to be served under this Performance Bond must be in writing and must be served by hand or by express courier or recorded delivery at the addresses stated in SCHEDULE 1 or such other alternative address for service as any of the Parties may notify to the other Parties in writing from time to time. Service shall take effect, if given by hand, on the date of delivery. If given by express courier or recorded delivery, it shall take effect on the date of delivery to the recipient (or if the date of delivery is not a Business Day or during regular business hours, then on the next Business Day thereafter).

18. No failure by the Employer to exercise or delay by the Employer in exercising any right or remedy shall operate as a waiver, nor shall any single or partial exercise or waiver of any right or remedy preclude its further exercise or the exercise of any other right or remedy. A waiver given or consent granted by the Employer under this Performance Bond will be effective only if given in writing and only in the instance and for the purpose for which it is given.

19. If at any time any one or more of the provisions of this Performance Bond is or becomes invalid, illegal or unenforceable in any respect under any law of any jurisdiction, the validity, legality and enforceability of the remaining provisions hereof shall not be in any way affected or impaired.

20. This Performance Bond and any non-contractual obligations arising out of or in connection with it shall be governed by and construed in accordance with the laws of Scotland and the non-exclusive jurisdiction of the courts of Scotland in relation to disputes arising hereunder.

21. Save to the extent expressly provided in this Performance Bond and, to avoid doubt, without prejudice to the terms of the Funders' Direct Agreement or the rights of any permitted successor to the rights of the Employer or of any permitted assignee, it is expressly declared that no rights shall be conferred under and arising out of this Performance Bond upon any person other than the Contractor and the Employer and without prejudice to the generality of the foregoing, there shall not be created by this Performance Bond a jus quaesitum tertio in favour of any person whatsoever.

EXECUTED AS A DEED by the parties or their duly authorised representatives on the date of this Deed.

SCHEDULE 1

SCHEDULE PART 35

PARENT COMPANY GUARANTEE

BUILDING CONTRACTOR'S PARENT COMPANY GUARANTEE

[DATE]

BROOKFIELD MULTIPLEX PTY

[ABN [●]]

and

IHS LOTHIAN LIMITED

THIS GUARANTEE is made the

BETWEEN:

(1) **BROOKFIELD MULTIPLEX PTY LIMITED** (ACN 147 631 472) whose registered office is at Level 22, 135 King Street, Sydney, Australia (the "**Guarantor**"); and

(2) **IHS LOTHIAN LIMITED** (Regd. No. SC493676)whose Registered Office is at 50 Lothian Road, Edinburgh, Scotland, EH3 9WJ the ("**Beneficiary**")

WHEREAS:

(A) This Guarantee is supplemental to a construction contract, as amended or varied from time to time (the "**Subcontract**") made or to be made between the Beneficiary and Brookfield Multiplex Construction Europe Limited (the "**Subcontractor**") pursuant to which the Subcontractor has agreed to carry out certain works in accordance with the terms of the Subcontract and supplemental to a Direct Agreement, as amended or varied from time to time (the "**Direct Agreement**") made or to be made among the Beneficiary, Subcontractor, Guarantor and **Prudential Trustee Company Limited** (registered number 01863305) whose registered office is at Laurence Pountney Hill, London, EC4R 0HH as agent and trustee for and on behalf of the Secured Creditors (the "**Security Trustee**");

(B) Pursuant to the terms of the Subcontract, the Subcontractor has agreed to procure the provision of a guarantee in the terms hereof.

(C) At the request of the Subcontractor, the Guarantor has agreed with the Beneficiary to guarantee the performance of the Subcontractor's obligations under the Subcontract and the Direct Agreement in accordance with the terms hereof.

IT IS HEREBY AGREED AS FOLLOWS:

1. In consideration of entering into the Subcontract with the Subcontractor, the Guarantor irrevocably and unconditionally guarantees to the Beneficiary, both as guarantor and principal debtor:

   (a) the due and punctual observation and performance by the Subcontractor of all duties, obligations, , warranties and undertakings (whether actual, or contingent, present or future, express or implied) to be observed and performed on the part of the Subcontractor under or pursuant to the Subcontract and the Direct Agreement or from the occurrence of any Contractor Event of Default (as defined in clause 40 of the Subcontract); (the "**Obligations**") when they become due and performable according to the terms of the Subcontract or Direct Agreement (as the case may be);

(b) the satisfaction of all claims, demands, losses, damages, liabilities, costs, fees, expenses and interest whatsoever arising in any way directly or indirectly out of any default by the Subcontractor of the Obligations

(c) the satisfaction of any judgment (including of interest) of any court, adjudicator or competent tribunal in respect of the Subcontractor's liability to the Beneficiary in respect of the performance of the Obligations.

(d) will indemnify on demand against any loss or liability suffered by the Beneficiary if any Obligation is or becomes void, voidable or unenforceable or invalid (save where the Subcontract is void, voidable, unenforceable or invalid for reasons of illegality)

provided always that:

(i) save in respect of any costs and expenses incurred in pursing and enforcing its rights under or in connection with this Guarantee, the Guarantor's liability under this Guarantee will be limited to the liability of the Subcontractor under the Subcontract and Direct Agreement, or in respect of liability under clause 1(d), the liability that the Subcontractor would have had under the Subcontract or Direct Agreement (as the case may be) had the obligations thereunder not been or become void, voidable, unenforceable or invalid; and

(ii) the Guarantor shall be entitled to rely on any defences that the Subcontractor may have had under the Subcontract or Direct Agreement.

2. The Guarantor undertakes that, whenever the Subcontractor does not pay any amount when due under or in connection with the Subcontract, the Guarantor shall within five (5) Working Days from receipt of written demand from the Beneficiary pay that amount as the principal debtor.

3. The Guarantor agrees that the Beneficiary in the enforcement of its rights hereunder may proceed against the Guarantor as if it were named as the Subcontractor in the Subcontract. The Guarantor hereby waives any right to require the Beneficiary to proceed against the Subcontractor or to pursue any other remedy whatsoever which may be available to the Beneficiary before proceeding against the Guarantor.

4. The obligations and liabilities of the Guarantor under this Guarantee shall be effective from the date hereof and shall not be affected, discharged or released in any way by any circumstances (except by a written discharge between the Guarantor and the Beneficiary) which would otherwise release the Guarantor from its obligations hereunder (and the Guarantor hereby waives any entitlement it may have to notice of any such circumstances), including:

(a) any variation or amendment of the Subcontract (including without limitation extension of time) or any concession or waiver by the Beneficiary in respect of the Subcontractor's obligations;

(b) the Subcontract or any provision of the Subcontract being or becoming illegal, invalid, void, voidable or unenforceable;

(c) any forbearance or waiver of any right of action or remedy the Beneficiary may have against the Subcontractor or negligence by the Beneficiary in enforcing any such right of action or remedy;

(d) any bond, undertaking, security or other guarantee held or obtained by the Beneficiary for all or any parts of the obligations whose performance is hereby guaranteed or any release or waiver thereof;

(e) any legal limitation or incapacity relating to the Subcontractor; or

(f) any other fact, circumstance, act, event, omission or provision of statute or law.

5. The Guarantor hereby further agrees with the Beneficiary that if the Subcontractor goes into liquidation and the liquidator shall disclaim the Subcontract the liability of the Guarantor under this Guarantee shall remain in full force and effect in respect of any claims, demands, losses, damages, costs, fees, expenses and interest related to such liquidation or the termination of or under the Subcontract consequent thereon.

6. Without prejudice to clause 4, the Guarantor expressly confirms that it intends that this Guarantee shall extend from time to time to any (however fundamental) amendment, variation, increase, extension or addition of, under or to the Subcontract for any purpose and any fees, costs and/or expenses associated with such variation, increase, extension or addition.

7. The Guarantor must not (while the Subcontractor has any obligations or liabilities (actual or contingent) under the Subcontract), exercise any:

(a) rights of subrogation, contribution and indemnity;

(b) right to take the benefit of or enforce any security or other guarantee or indemnity for the Subcontractor's obligations held by the Beneficiary; and

(c) right to prove or claim in the bankruptcy, liquidation, administration or other insolvency proceedings of the Subcontractor,

to the extent that in doing so would be in competition with, or contrary to the interests of, the Beneficiary. Any amount recovered as a result of the exercise of any such rights contrary to this clause shall be held on trust for the Beneficiary and shall be paid to the Beneficiary immediately upon receipt of such amount by the Guarantor. The Guarantor warrants to the Beneficiary that it has not taken any security from the Subcontractor in relation to this Guarantee and agrees not to do so. Any security taken by the Guarantor in breach of this provision and all moneys at any time received in respect thereof shall be held on trust for the Beneficiary.

8. All payments by the Guarantor under this Guarantee shall be made in full, without set-off or counterclaim and, subject to clause 9 of this Guarantee, free and clear of any deductions or withholdings in immediately available, freely transferable, cleared funds in Sterling for value on the date specified in the Beneficiary's demand to the account specified in the Direct Agreement.

9. If at any time the Guarantor is required by law to make any deduction or withholding in respect of any taxes, duties or other charges or withholdings from any payment due hereunder, the sum due from the Guarantor in respect of such payment shall be increased to the extent necessary to ensure that, after the making of such deduction or withholding, the Beneficiary receives on the payment date and retains (free of any liability in respect of such deduction or withholding) a net sum equal to the sum which it would have received had no such deduction or withholding been required to be made.

10. No payment to the Beneficiary under this Guarantee or pursuant to any judgment or order of any court or otherwise shall operate to discharge the obligations of the Guarantor in respect of which it was made unless and until payment in full shall have been received in Sterling and, to the extent that the amount of any such payment shall on actual conversion into Sterling fall short of the amount of the obligation expressed in Sterling, the Beneficiary shall have a further and separate cause of action against the Guarantor for the recovery of such sum as shall after conversion into Sterling be equal to the amount of the shortfall.

11. This Guarantee is a continuing security and accordingly shall cover all of the obligations and liabilities of the Subcontractor to the Beneficiary under the Subcontract and shall remain in full force and effect until all Obligations of the Subcontractor shall have been paid, carried out, completed or discharged in full in accordance with the Subcontract.

12. For the benefit of the Beneficiary and the Subcontractor, the Guarantor waives any right or remedy that it has or may have to subrogation, indemnification or payment on any other basis by the Subcontractor and any other remedy against the Subcontractor (each a "Relevant Right") by reason of or in connection with the performance of the Guarantor's obligations under this Guarantee or the Obligations in circumstances where the Subcontractor promotes, enters into, or implements a voluntary arrangement (as defined in section 1(1) of the Insolvency Act 1986) or formal scheme of arrangement (under Part 26 of the Companies Act 2006), in each case as amended or re-enacted from time to time, or any analogous procedure in any jurisdiction. Damages shall not be an adequate remedy for the Beneficiary or the Subcontractor in respect of a breach of this clause and the parties shall consent to any application brought by the Beneficiary or the Subcontractor for an interdict to prevent any such Relevant Right being enforced.

13. If any moneys paid to the Beneficiary under the Subcontract by the Subcontractor have to be repaid to the Subcontractor by the Beneficiary by virtue of any provision or enactment relating to bankruptcy, insolvency or liquidation for the time being in force or on any other ground, the liability of the Guarantor under this Guarantee shall be computed as if such moneys had never been paid to the Beneficiary at all.

14. The Guarantor shall procure that prior to the Actual Completion Date (as defined under the Building Contract) the Net Tangible Assets of the BMG Group will at all times exceed GBP 150,000,000.00. Within 90 days of each Test Date the Guarantor shall provide written notice to the Beneficiary (with a copy to the Security Trustee) confirming the calculation of its Net Tangible Assets. For the purposes of this clause 14

Accounting Standards means:

(a) the accounting standards as defined in section 9 of the Corporations Act;

(b) the requirements of the Corporations Act for the preparation and content of accounts; and

(c) generally accepted accounting principles and practices consistently applied in Australia, including any domestically accepted international accounting standards, except principles and practices that are inconsistent with those referred to in paragraphs (a) or (b) of this definition.

BMG Group means Brookfield Multiplex Pty Limited and its wholly owned Subsidiaries.

Corporations Act means the Corporations Act 2001 (Commonwealth of Australia)

Financial Statements means, in respect of an entity within or the BMG Group, the audited consolidated accounts of the entity or BMG Group (prepared in accordance with the Accounting Standards).

Intangible Assets means any goodwill, trade name, trade mark, service mark, brand name, design right, franchise, patent, other intellectual property, future income tax benefit, underwriting and formation expenses and any other item which must be accounted for under the Accounting Standards as an intangible asset.

Net Tangible Assets means, in respect of the BMG Group, the BMG Group's total assets (as accounted for under the Accounting Standards, and for the avoidance of doubt, after making provision for depreciation (if any) and bad and doubtful debts), less:

(a) the value of the BMG Group's Intangible Assets; and

(b) the BMG Group's total liabilities,

all as would be shown in the Financial Statements if they were prepared at that date.

Subsidiary means, in relation to an entity, any entity which the first entity must consolidate in its accounts in accordance with Accounting Standards.

Test Date means until the Actual Completion Date, each of 30 June and 31 December in each year.

15. All notices and demands arising out of or in connection with this Guarantee shall be sent by personal delivery, post, airmail post or courier to the address set out below (as may be changed in accordance with Clause 16):

    (a) Upon the Beneficiary at 50 Lothian Road, Edinburgh, EH3 9WJ marked for the attention of Wallace Weir;

    (b) Upon the Guarantor at Level 22, 135 King Street, Sydney, Australia marked for the attention of Charlie Bolt;

    Provided that any notice or demand sent by personal delivery, post, airmail post or courier will be deemed (in the absence of earlier receipt) to have been delivered 10 day after dispatch.

16. The Beneficiary and the Guarantor may change their respective nominated addressees for service of documents to another addressee, but only with prior written notice to the other party giving not less than 7 days' notice in advance to the other parties. All demands and notices must be in writing.

17. This Guarantee is not assignable by the Beneficiary without the prior written agreement of the Guarantor other than (a) by way of security to the Security Trustee on behalf of the Senior Funders (as defined in the Project Agreement) or (b) to a person to whom the benefit of the Subcontract has been assigned or novated. The Guarantor may not assign, transfer or novate any of its rights or obligations hereunder.

18. The Guarantor acknowledges that in the event that the Subcontract is novated pursuant to clause 7 of the Direct Agreement all the rights and obligations of the Beneficiary under the Guarantee shall be novated to the Suitable Substitute Contractor(as defined in the Project Agreement).

19. This Guarantee shall be governed by Scots law, and the Guarantor hereby irrevocably submits to the exclusive jurisdiction of the Court of Session in Edinburgh, save where the Sheriff Courts have exclusive competence in which case it shall be referred to the Sheriffdom of Lothian and Borders at Edinburgh (except for the purpose of enforcement proceedings in respect of any decision, judgment or award of such court in another jurisdiction) and irrevocably appoints the Subcontractor to accept service of any proceedings issued out of the Courts in Scotland as aforesaid

20. The parties agree that this Guarantee shall not be amended without the prior written consent of the parties.

21. When used in this Guarantee, the expression "Working Days" means days (other than Saturdays or Sundays) on which banks are open for domestic business in the City of London.

22. The Beneficiary agrees to return this Guarantee to the Guarantor within 30 days of the expiry of all its rights under this Guarantee and the discharge of the liabilities of the Guarantor under this Guarantee. This Guarantee shall become automatically null and void at that time, whether or not this Guarantee has been returned to the Guarantor.

IN WITNESS WHEREOF these presents typewritten on this and the preceding 4 pages are executed by the parties hereto as follows:

For and on behalf of Brookfield Multiplex Pty Limited

signature of director/secretary/authorised signatory/witness	signature of director/secretary/authorised signatory
full name of above (print)	full name of above (print)
	date of signing
	place of signing

For and on behalf of IHS Lothian Limited

signature of director/secretary/authorised signatory/witness	signature of director/secretary/authorised signatory
full name of above (print)	full name of above (print)
	date of signing
address of witness	place of signing

SCHEDULE PART 36

INTERFACE AGREEMENT

BROOKFIELD MULTIPLEX CONSTRUCTION EUROPE LIMITED

and

BOUYGUES ENERGIES & SERVICES FM (UK) LIMITED

and

IHS LOTHIAN LIMITED

INTERFACE AGREEMENT

in connection with

THE NEW FACILITIES AT THE ROYAL HOSPITAL FOR SICK CHILDREN, CHILD AND ADOLESCENT MENTAL HEALTH SERVICE AND THE DEPARTMENT OF CLINICAL NEUROSCIENCES IN A SINGLE BUILDING ADJOINING AT THE ROYAL INFIRMARY OF EDINBURGH AT LITTLE FRANCE

Contents

1. INTERPRETATION 476
2. DEFINITIONS 476
3. RIGHTS AND OBLIGATIONS 478
4. INTERACTION WITH SUBCONTRACTS 478
5. CLAIMS 478
6. PROJECT CO 478
7. INDEMNITIES 479
8. REALLOCATION OF LIABILITIES 480
9. INTERFACE DISPUTE RESOLUTION PROCEDURE 481
10. NOVATION 481
11. MISCELLANEOUS 482
12. TERMINATION 484
13. LIMITATIONS ON LIABILITY 484
14. NET ASSET TEST 485
15. MITIGATION 486
16. PRECEDENCE 486

SCHEDULE PART 1 489
SCHEDULE PART 2 491
SCHEDULE PART 3 500
SCHEDULE PART 4 508
SCHEDULE PART 5 513
SCHEDULE PART 6 514
SCHEDULE PART 7 515

BETWEEN:

(1) BROOKFIELD MULTIPLEX CONSTRUCTION EUROPE LIMITED (registered under number) whose registered office is [ ] ("**Contractor**");

(2) BOUYGUES ENERGIES & SERVICES FM (UK) LIMITED (registered under number 04243192) whose registered office is at Waterloo Centre, Elizabeth House, 39 York Road, London SE1 7NQ (the "**Service Provider**");

(3) IHS LOTHIAN LIMITED (registered under number SC493676) whose registered office is at 50 Lothian Road, Edinburgh, Scotland, EH3 9WJ ("**Project Co**").

WHEREAS:

(A) Project Co has entered into the Project Agreement with Lothian Health Board inter alia (the "**Board**") for the provision of new facilities and the provision of services.

(B) Project Co has entered into the Construction Contract with the Contractor for the design, construction, commissioning and completion of certain Facilities.

(C) Project Co has entered into the Services Contract with the Service Provider for the provision of certain Services at the Site.

(D) The Subcontractor Parties wish to enter into this interface agreement (the "**Agreement**") for the purposes of detailing certain arrangements between them in connection with matters which are the subject of the Construction Contract and the Services Contract, (individually, a "**Subcontract**" and collectively the "**Subcontracts**") in order (inter alia) (a) to regulate the recovery of any costs, losses or expenses caused to or incurred or injury suffered by any Subcontractor Party by reason of the breach by another Subcontractor Party of its Subcontract; and (b) to agree certain matters which are ancillary and incidental to the performance by the Subcontractor Parties of their respective obligations under their respective Subcontracts.

IT IS AGREED:

1. INTERPRETATION

1.1 This Agreement shall be interpreted in accordance with the provisions of Schedule Part 1.

2. DEFINITIONS

In this Agreement, words and expressions shall have the meanings as are assigned to them in the Project Agreement or the Subcontracts unless otherwise stated. In addition the following expressions shall have the meanings now ascribed to them:

"Accounting Standards" means, in respect of any entity, the audited consolidated accounts of the entity, prepared in accordance with generally accepted accounting principles, consistently applied in the jurisdiction of the entity concerned, including any accepted international accounting standards.

"Actual Completion Date" has the meaning assigned to it in the Construction Contract.

"**Business Day**" means a day other than a Saturday, Sunday or a bank holiday in Scotland;

"**Construction Contract**" means the construction contract dated the same date as this Agreement between Project Co and the Contractor;

"**Construction Defects**" means any Defects, Snagging Matters and failure to comply with the requirements of Schedule Part 6 of this Agreement;

"Defects" has the same meaning assigned to it under the Construction Contract.

"Direct Losses" shall be as defined in the Project Agreement, save that: 1. for the avoidance of doubt Direct Losses incurred under this Agreement shall include all reasonable and fully substantiated costs and expenses unavoidably and necessarily incurred as a consequence of the need to utilise additional materials, additional staff and/or the use of subcontractors to remedy a Construction Defect and 2: in relation to the remediation of Construction Defects by the Service Provider on behalf of the Contractor the Service Provider shall be entitled to charge overhead and profit at a rate equivalent of 12% of the direct cost of the relevant works.

"Dispute" means any dispute, claim or difference between the Subcontractor Parties arising out of or relating to this Agreement;

"Expiry Date" means the date which is 12 years after the Actual Completion Date.

"Fast Track Interface Dispute Resolution Procedure" means the expert fast track dispute resolution procedure set out in Schedule Part 3 Part **4** for the resolution of Disputes;

"**FM Design Requirements**" means the requirements of the Service Provider set out in Schedule Part 5 and Schedule Part 6 of this Agreement;

"**Intangible Assets**" means any goodwill, trade name, trade mark, service mark, brand name, design right, franchise, patent, other intellectual property, future income tax benefit, underwriting and formation expenses and any other item that must be accounted for under the Accounting Standards as an intangible asset.

"Interface Dispute Resolution Procedure" means the dispute resolution procedure set out in Schedule Part 3 for the resolution of Disputes;

"**Net Tangible Assets**" means in respect of the Service Provider or Contractor, the total assets of that entity accounted for under the Accounting Standards and, for the avoidance of doubt, after making provision for depreciation (if any) and bad and doubtful debts), less

(a) the value of the Intangible Assets of that entity; and

(b) the total liabilities of that entity,

all as would be shown in the financial statements of that entity if they were prepared at that time.

"Parties" means the parties to this Agreement (including any permitted successors or assigns of the original parties);

"Pass-Down Liability" means:

(a) any Deduction or other reduction, offset or abatement made against the Monthly Service Payment under the Project Agreement, or other liability incurred by Project Co towards the Board under the Project Agreement for which in turn one or both of the Subcontractor Parties, whether by way of indemnity, payment deduction, reimbursement or otherwise may be responsible under the Subcontracts; and / or

(b) prior to termination of the Services Contract, any reasonable expenditure which is incurred by the Service Provider in remedying any Construction Defects and reimbursable by the Contractor, in accordance with Item 7 of Schedule Part 2 to this Agreement;

"**Services Contract**" means the services contract dated the same date as this Agreement between Project Co and the Service Provider;

"Snagging Matters" has the same meaning assigned to it under the Construction Contract;

"**Sub-Contractor Change**" means any change to the Construction Contract or to the Services Contract as the case may be under the relevant Subcontract;

"Subcontractor Parties" means the Contractor and the Service Provider, each a Subcontractor Party.

3. RIGHTS AND OBLIGATIONS

Each of the Subcontractor Parties shall perform and undertakes to Project Co that it shall perform, the obligations set out in Schedule Part 2 in the column headed with their name and shall have the benefit of those obligations of the other Subcontractor Party which are expressly provided to them.

4. INTERACTION WITH SUBCONTRACTS

This Agreement shall not derogate from and the rights and obligations contained in this Agreement are in addition to (and not in substitution for) the obligations and liabilities of the Subcontractor Parties to Project Co under their respective Subcontracts.

5. CLAIMS

5.1 Subject to Clause 6.1, if a Subcontractor Party has a claim against the other Subcontractor Party under this Agreement, it shall be entitled to recover such claim from the other Subcontractor Party and Project Co shall be automatically released from such claim

5.2 If a Subcontractor Party wishes to pursue a claim pursuant to this Agreement (other than in respect of a Pass-Down Liability which will be dealt with in accordance with clause 8), such Subcontractor Party shall as soon as reasonably practicable (and in any event within twenty (20) Business Days) of becoming aware of the incident or event giving rise to such claim serve notice on the other Subcontractor Party (with a copy to Project Co) setting out in as much detail as is practicable the relevant facts, basis of alleged liability and quantum or likely quantum of the claim.

5.3 The Subcontractor Parties (and Project Co where requested by a Subcontractor Party) shall meet within five (5) Business Days of service of notice of a claim and use reasonable endeavours in good faith to agree the claim. In the absence of agreement to the claim either Subcontractor Party may refer the claim for determination in accordance with Clause 9 (*Interface Dispute Resolution Procedure*).

5.4 If the total aggregate of all claims owed by a Subcontractor Party is less than £5,000 in any one financial year, the Subcontractor Parties shall meet at the end of financial year to effect reconciliation and payments amongst the Subcontractor Parties.

6. PROJECT CO

6.1 Project Co has entered into this Agreement solely to take the benefit of this Agreement and shall have no liability of whatsoever kind and howsoever arising, save in respect of:

(a) any Pass-Down Liability allocated to a Subcontractor Party under clause 8 (*Reallocation of Liabilities)* which is not met by that Subcontractor Party as a result of that Subcontractor Party becoming insolvent (as defined in Clause 40.1.1 of the Services Contract or the Construction Contract); or

(b) any liability arising under clause 8A.3 of this Agreement..

6.2 Subject to paragraph 2 of Part 1 of Schedule Part 3, no party may seek to bring Project Co into the Interface Dispute Resolution Procedure.

7. INDEMNITIES

7.1 Subject to clauses 7.3 and 7.4 below, each Subcontractor Party ("**Indemnifying Party**") shall indemnify and keep indemnified the other Subcontractor Party ("**Indemnified Party**") at all times from and against all loss, damage, liability, claim, action, proceeding, cost and expense sustained by an Indemnified Party in consequence of:

(a) any injury to, or the death of, any employee of, or person engaged by the Indemnified Party arising out of any act or omission of the Indemnifying Party;

(b) any claim for, or in respect of, the death and/or personal injury of any third party arising out of any breach of this Agreement by the Indemnifying Party or negligence or any act or omission of the Indemnifying Party;

(c) any physical loss of or damage to any property or assets of the Board or any assets or other property of Project Co or any Subcontractor Party arising out of any breach of this Agreement by the Indemnifying Party or negligence or any act or omission of the Indemnifying Party;

(d) any loss of or damage to property or assets of any third party arising out of any breach of this Agreement by the Indemnifying Party or negligence or any act or omission of the Indemnifying Party;

in each such case save to the extent that any such damage, injury or death was due to any act, omission or default of the Indemnified Party, its or their employees, agents or subcontractors, save to the extent that the Indemnified Party recovers insurance proceeds in respect of the same damage, injury or death under the insurance policies maintained by Project Co on a joint names basis under the Project Agreement or otherwise maintained by an Indemnified Party (or, being entitled to, fails to pursue such recovery or to achieve such recovery for any reason whatsoever including as a result of an Indemnified Party's officer, servant, agent or subcontractor causing such insurance policy to become void, voidable, unenforceable, suspended or impaired).

7.2 If the Indemnified Party receives any notice, demand, letter or other document concerning any claim from which it appears that it is or may reasonably be expected to become entitled to indemnification pursuant to Clause 7.1, it shall give notice in writing of such claim as soon as reasonably practicable to the Indemnifying Party. Thereafter:

(a) the Indemnifying Party shall, provided that it admits the Indemnified Party's entitlement as aforesaid, be entitled to resist the claim in the name of the Indemnified Party at the Indemnifying Party's own expense and to have the conduct of any defence, dispute, compromise or appeal of the claim and of any incidental negotiations; but

(b) if the Indemnifying Party fails within twenty (20) Business Days of receipt of a notice given under this Clause 7.2 to confirm in writing its intention to apply Clause 7.2(a) or its acceptance of the Indemnified Party's entitlement, the Indemnified Party shall be free to pay or settle the claim (provided that it consults with the Indemnifying Party and takes into account their reasonable representations in relation to such settlement) and be indemnified in respect of such under the terms of Clause 7.1.

7.3 The provisions of Clause 7.1 shall not apply to the extent the Indemnified Party is indemnified by Project Co pursuant to its Subcontract in respect of the same loss set out in Clause 7.1.

7.4 Where a Subcontractor Party is responsible for any risk, loss or damage under this Agreement they shall also be responsible to the other Subcontractor Party for any insurance excesses, deductibles and any other uninsured amounts and amounts in respect of which

recovery from insurers is not made where a claim is made under an insurance policy in respect of such risk, loss or damage.

8. REALLOCATION OF LIABILITIES

8.1 Project Co may make an initial assessment in good faith concerning the allocation between the Subcontractor Parties of any Pass-Down Liability identified in paragraph (a) of the definition of Pass-Down Liability, and where a Subcontractor Party does not accept such allocation, that Subcontractor Party may, subject to and in accordance with this Clause 8, seek reallocation of that Pass-Down Liability in whole or in part to the other Subcontractor Party.

8.2 Any reallocation of Pass-Down Liabilities in whole or in part sought by a Subcontractor Party pursuant to this Clause 8 shall, unless agreed between the Subcontractor Parties within twenty (20) Business Days, be deemed to be disputed and then shall be determined in accordance with Clause 9. For the avoidance of doubt, Project Co shall not be joined as a party to any such procedure (but shall be kept informed of the progress of the reallocation of the Pass-Down Liability).

8.3 The grounds upon which a Pass-Down Liability shall be reallocated from one Subcontractor Party ("**Subcontractor A**") to another ("**Subcontractor B**") (wholly or in part) are that:

(a) the Pass-Down Liability arose (wholly or in part) by reason of Subcontractor B's Interface Failure, and not (or not wholly) by reason of Subcontractor A's Interface Failure or a risk borne by Subcontractor A under its Subcontract; and/or

(b) the Pass-Down Liability arose from Subcontractor A's Interface Failure but this was in turn (wholly or in part) caused or contributed to by or arose from Subcontractor B's Interface Failure.

8.4 The Subcontractor Parties agree that responsibility for a Pass-Down Liability may be shared, and that in such cases the Pass-Down Liability shall be reallocated between them in such proportions as are just and equitable, having regard to the grounds for reallocation set out in Clause 8.3.

8.5 Where a Pass-Down Liability is reallocated from one Subcontractor Party ("**Subcontractor A**") to another ("**Subcontractor B**") pursuant to this Clause 8 then subject to clause 8A, the amount of that Pass-Down Liability (or the amount thereof which is being reallocated) shall be paid by Subcontractor B to Subcontractor A together with interest at the Default Interest Rate calculated from the date on which the Pass-Down Liability was suffered financially by Subcontractor A until the date of payment by Subcontractor B. The date for payment shall be as agreed between the parties or as determined pursuant to Clause 9 if no agreement is reached.

8.6 All reallocations of Pass-Down Liabilities from one Subcontractor Party to another pursuant to this Clause 8 shall be promptly notified to Project Co in writing by the Subcontractor Party to whom the Pass-Down Liability is reallocated.

8.7 Not used.

8.8 A Subcontractor Party shall not reallocate a liability pursuant to this Clause 8 for which it is liable to indemnify that other Subcontractor Party pursuant to Clause 7.

8.9 For the purposes of this Clause 8, '**Interface Failure**' means:

(a) under-performance of a Subcontractor Party under its Subcontract where the appropriate response and/or rectification times under its Subcontract have elapsed; or

(b) under-performance of a Subcontractor Party under its Subcontract where the appropriate response and/or rectification times under its Subcontract have not elapsed, but the under-performance was caused by a failure of that Subcontractor Party to comply with its method statement(s); or

(c) under-performance of a Subcontractor Party (the "**Underperforming Subcontractor**") under its Subcontract where the appropriate response and/or rectification times under its Subcontract have not elapsed but the Underperforming Subcontractor has not since becoming aware of the under-performance, used reasonable endeavours and appropriate steps to mitigate against the potential consequences and liabilities that the other Subcontractor Party may suffer, including but not limited to, taking all reasonable steps to remedy the under-performance as soon as reasonably practicable (provided that the other Subcontractor Party acts reasonably, in identifying and notifying the Underperforming Subcontractor of such potential consequences and liabilities that it may incur); or

(d) any other breach by a Subcontractor Party of its Subcontract or the occurrence of a risk borne by that Subcontractor Party under its Subcontract arising out of the performance or under-performance of that Subcontractor under its Subcontract where no response or rectification time is applicable.

8A LIABILITY CAPS

8A.1 Where a Pass-Down Liability is reallocated pursuant to clause 8, the amount of such liability (or such part of the same as is reallocated and paid as aforesaid) shall no longer be treated as a liability suffered by the Subcontractor Party away from whom the reallocation was made for the purposes of any cap on liability under its Subcontract and this Agreement, and such cap shall accordingly stand refreshed to the figure immediately prior to the original allocation having been made.

8A.2 The amount of any Pass-Down Liability that is reallocated to a Subcontractor Party pursuant to clause 8 shall be treated as a liability suffered by the Subcontractor Party to whom the reallocation is made, for the purposes of any cap on liability under its Subcontract (as appropriate) and such reallocation shall be applied against the relevant caps on liability set out in its Subcontract.

8A.3 To the extent that any re-allocated Pass-Down Liability when aggregated with all other relevant liabilities (which are subject to any cap on liability under the said Subcontract) exceeds the cap on liability which is applied pursuant to Clause 8A.2 the Subcontractor Party to whom reallocation was made shall have no obligation to make any payment of any amount which is in excess of such cap on liability (the "**Outstanding Amount**") to the other Subcontractor Party in respect of the amount due under Clause 8.5. Project Co shall be liable to the other Subcontractor Party for the Outstanding Amount.

8A.4 Notwithstanding any other position of this Agreement or the Subcontract, no liability incurred by a Subcontractor under this Agreement (other than a Pass-Down Liability reallocated under clause 8 of this Agreement), shall count towards that Subcontractor's liability cap under its Subcontract.

9. INTERFACE DISPUTE RESOLUTION PROCEDURE

9.1 Without prejudice to the Subcontractor Parties' obligations under their respective Subcontracts but subject to Clause 6.2 hereof, the Interface Dispute Resolution Procedure shall apply to any Dispute which arises out of or relating to this Agreement.

10. NOVATION

10.1 In the event of a replacement Subcontractor Party being appointed by Project Co, the Subcontractor Parties shall on request of Project Co enter into a deed of novation in relation to this Agreement with the replacement subcontractor in the form set out at Schedule Part 4

with such amendments to the deed of novation as may reasonably be required to fully effect such novation.

10.2 The Subcontractor Party being replaced ("**Exit Co**") shall bear the reasonable costs and expenses incurred by Project Co and the other Subcontractor Party, in connection with negotiating, preparing and executing a deed of novation in accordance with Clause 10.1, save where Exit Co is insolvent (as defined in Clause 40.1.1 of the Services Contract or the Construction Contract) in which case Project Co shall bear the costs and expenses of the other Subcontractor Party.

11. MISCELLANEOUS

11.1 SEVERABILITY

If any provision of this Agreement is held to be illegal or unenforceable, the validity or enforceability of the remaining provisions shall not be affected.

11.2 GOVERNING LAW

(a) This Agreement is governed by Scottish law.

(b) Subject to the provision of the Interface Dispute Resolution Procedure, the parties agree that the courts of Scotland shall have exclusive jurisdiction to hear and settle any action, suit, proceeding or dispute in connection with this Agreement and irrevocably submit to the jurisdiction of those courts.

11.3 AMENDMENTS

(a) This Agreement shall not be amended except in writing signed by duly authorised signatories of all the parties.

(b) The parties agree that no amendment to a Subcontract that would have a material adverse effect on a Subcontractor Party (other than the Subcontractor Party who is a party to that Subcontract) will take effect for the purposes of this Agreement without the written approval of the Subcontractor Party or Subcontractor Parties who will suffer such material adverse effect.

11.4 ENTIRE AGREEMENT

This Agreement supersedes any prior agreement or understandings among the parties concerning its subject matter and together with the relevant Subcontract, and guaranteesand any agreement referred to in this Agreement or in such Subcontract or guarantees constitutes the entire agreement between them.

11.5 NO AGENCY

Save as otherwise provided in this Agreement, neither of the Subcontractor Parties shall be or be deemed to be an agent of Project Co and each of the Subcontractor Parties shall not hold itself out as having authority or power to bind Project Co in any way.

11.6 RIGHTS OF THIRD PARTIES

Save to the extent expressly provided in this Agreement and, to avoid doubt, without prejudice to the terms of the Funders' Direct Agreement, the Funder's Service Provider Direct Agreement, the Funder's Contractor Direct Agreement or the rights of any permitted successor to the rights of Project Co or of any permitted assignee, it is expressly declared that no rights shall be conferred under and arising out of this Agreement upon any person other than the parties to this Agreement and without prejudice to the generality of the foregoing, there shall not be created by this Agreement a jus quaesitum tertio in favour of any person whatsoever.

11.7 FRAUD AND FRAUDULENT MISREPRESENTATION

Nothing in this Agreement is intended to, or shall operate so as to, exclude or limit any liability for fraud or fraudulent misrepresentation.

11.8 NOTICES

(a) All notices under this Agreement shall be in writing and all invoices or notices to be given under the terms of this Agreement shall be served by sending the same by first class post or by hand, leaving the same at:

If to the Service Provider	Bouygues E&S FM UK Limited Waterloo Centre, Elizabeth House, 39 York Road, London SE1 7NQ FAO: Xavier Plumley, Company Secretary
If to Project Co	50 Lothian Road, Edinburgh, EH3 9WJ FAO: Wallace Weir
If to the Contractor	Brookfield Multiplex Construction Europe Limited Level 2, 99 Bishopsgate, London EC2M 3XD FAO: Ben Keenan, Company Secretary

(b) Any party to this Agreement may change its nominated address by prior written notice to all the other parties.

(c) Notices given by post shall be effective upon the earlier of (i) actual receipt, and (ii) five (5) Business Days after mailing. Notices delivered by hand shall be effective upon delivery.

11.9 ASSIGNATION

(a) The Subcontractor Parties shall not, without the prior written consent of Project Co and the other Subcontractor Party (such consent not to be unreasonably withheld), assign, transfer or otherwise dispose of any interest in this Agreement and neither Subcontractor Party shall grant or purport to grant any security interest over or in relation to this Agreement except with the prior written consent of Project Co in its absolute discretion.

(b) Project Co shall be freely entitled without the consent of the Subcontractor Parties to transfer or assign (including by way of security or charge) the benefit of this Agreement or any benefit arising from this Agreement and any such transfer or assignation may include the right to make second and subsequent assignments (including in order to perfect or enforce such assignment or charge).

12. TERMINATION

12.1 If a Subcontractor Party's appointment under its Subcontract is terminated, then save for and subject to the obligations on that Subcontractor Party under Clause 10 and without prejudice to the accrued rights and liabilities of the Subcontractor Party hereunder as at the date of termination of the relevant Subcontract, the Subcontractor Party shall have no further obligations under this Agreement.

12.2 Without prejudice to Project Co's right to receipt of compensation on termination, from each Subcontractor Party under each Subcontract, in the event that Subcontractor A's appointment under its Subcontract is terminated for breach of its Subcontract as a result of an act or omission of Subcontractor B then, subject to clause 13, Subcontractor B shall be liable to Subcontractor A in respect of:

(a) any costs or losses of Subcontractor A incurred to Project Co in accordance with its Subcontract; and

(b) any amounts that would have been payable to Subcontractor A in accordance with its Subcontract in circumstances where the Subcontract had been terminated for Project Co default.

12.3 This Agreement shall terminate upon the date of termination of the Project Agreement (without prejudice to the accrued rights and liabilities of the parties arising hereunder up to and including the date of termination). The Contractor's liabilities under this Agreement shall expire on the date falling 12 years after the Actual Completion Date, save in respect of claims notified to the Contractor by Project Co and/or the Service Provider prior to such expiry date and subject to any accrued rights and obligations.

13. LIMITATIONS ON LIABILITY

13.1 The aggregate liability of the Subcontractor Parties to each other for any matters under this Agreement shall not, save as set out in clause 13.2 or 13.3, exceed the financial limits set out below:

(a) the Contractor limited to £7,000,000 (seven million pounds) for any liability to or loss suffered or incurred by the Service Provider

(b) the Service Provider limited to £2,600,000 (two million six hundred thousand pounds) for any liability to or loss suffered or incurred by the Contractor;

13.2 The Subcontractor Parties do not exclude or restrict liability, for any of the following and no liability for the same shall be taken into account in determining whether any limit of liability under clause 13.1 has been reached or exceeded:

(a) payments made by a Subcontractor Party to the extent corresponding payments are received by such Subcontractor Party pursuant to insurance policies;

(b) a Subcontractor Party's liability in the event of any fraud, fraudulent misrepresentation, corruption or wilful default (which for the purposes of this clause shall exclude abandonment) of such Subcontractor Party;

(c) a Subcontractor Party's liability in respect of its indemnity obligations set out in clause 7; and

(d) the costs of enforcement or defence or the amount of any costs awarded against a Subcontractor Party in respect of any obligation under this Agreement which requires the other Subcontractor Party to enforce or defend its rights under this Agreement.

13.3 Nothing in this Clause 13 shall:

(a) limit the reallocation and/or recovery in relation to Pass-Down Liabilities pursuant to Clause 8; or

(b) subject to clause 6.1 (*Project Co*), result in any claim against Project Co for any Pass-Down Liability which the relevant Subcontractor Party is unable to recover under the reallocation mechanism in Clause 8 (*Reallocation of Liabilities*).

14. NET ASSET TEST

(a) The Contractor undertakes to the Service Provider that at no time prior to the Expiry Date will the value of the Contractor's Net Tangible Assets be less than £20,000,000.

(b) If at any time prior to the Expiry Date the Contractor is in breach of clause 14 (a), then the Contractor must, within 14 days, deliver to the Service Provider either:

(i) a parent company guarantee (in form attached as Schedule Part 7) from Brookfield Multiplex Pty Ltd (ACN 147 631 472) whose registered office is at Level 22, 135 King Street, Sydney, Australia in respect of the obligations of the Service Provider under this Agreement in respect of the obligations of the Contractor under this Agreement; or

(ii) an irrevocable letter of credit or an on-demand performance bond issued by an entity that is at least investment grade for the amount of £7,000,000.

(c) The Service Provider shall within 90 days of the date of this Agreement deliver to the Contractor a parent company guarantee (in form attached as Schedule Part 7) from Bouygues Energies & Services S.A.S (company number RCS Versailles 775 664 873) whose registered office is at 19 Rue Stephenson, 78180 Montigny-le-Bretonneux, France in respect of the obligations of the Service Provider under this Agreement.

(d) Any security provided by the Contractor pursuant to clause 14(b) shall remain in place until the earlier of the Expiry Date or the date on which the Contractor's Net Tangible Assets are restored to the applicable threshold set out in clause 14(a) save in respect of where there has been a claims made prior to the said expiry in which case the security provided by the Contractor shall remain in place until determination of the claim unless the Contractor maintains Net Tangible Assets of £20,000,000 or more.

(e) The parent company guarantee provided by the Service Provider pursuant to clause 14(c) shall remain in place until the earlier of the Expiry Date or the date on which the Service Provider's Net Tangible Assets are £5,000,000 or more save that in respect of any claim made prior to the said expiry the Service Provider parent company guarantee shall remain in place until determination of the claim unless the Service Provider maintains Net Tangible Assets of £5,000,000 or more. The Service Provider shall, within 14 days, deliver to the Contractor a further parent company guarantee (in form attached as Schedule Part 7) if at any time prior to the Expiry Date the Service Provider's Net Tangible Assets fall below £5,000,000.

(f) The Contractor's obligation to comply with clause 14(a) shall cease to apply if and for so long as the Service Provider is in breach of its obligations to either provide a parent company guarantee pursuant to clauses 14(c) or 14(e) or, alternatively, to evidence that the Service Provider's Net Tangible Assets are £5,000,000 or more.

(g) Either party may request, at intervals of no less than 3 months, from the other written confirmation from their CFO that the Net Tangible Asset thresholds referred to in clauses 14(a) and 14(e), as the case may be, have been maintained at the time of request.

15. MITIGATION

Where a Subcontractor Party becomes entitled to claim any losses, costs or expenses or any part thereof from the other Subcontractor Party under this Agreement, the Subcontractor Party making such claim shall be obliged to use all reasonable endeavours to mitigate such loss and/or the entitlement to recover such from the other Subcontractor Party including recovering such loss or entitlement under an insurance policy.

16. PRECEDENCE

The following order of precedence shall apply in respect of this Agreement and in the event of any conflict or inconsistency between or among the terms of any of the documents that comprise this Agreement, the terms of the document with a higher precedence, as stated below, shall govern and control:-

(a) Firstly, the Project Agreement;

(b) Secondly the Subcontracts; and

(c) Thirdly, this Agreement.

IN WITNESS WHEREOF the parties have executed and delivered this Agreement as a Deed on the date first before written.

SUBSCRIBED for and on behalf of **BROOKFIELD MULTIPLEX CONSTRUCTION EUROPE LIMITED**

at

on the day of 2015 as follows: -

..... (Director/Authorised Signatory)

..... Full Name

Before this witness: -

Witness .....

Full name .....

Address .....

SUBSCRIBED for and on behalf of **BOUYGUES E&S FM (UK) LIMITED**

at

on the day of 2015 as follows:

..... Director

..... Full Name

..... Director

..... Full Name

SUBSCRIBED for and on behalf of **IHS LOTHIAN LIMITED**

at

on the day of 2015 as follows: -

..... (Director/Authorised Signatory)

..... Full Name

Before this witness: -

Witness .....

Full name .....

Address .....

This is the Schedule in [ ] parts referred to in the foregoing contract between [ ] and [ ]

SCHEDULES TO THE INTERFACE AGREEMENT

[ ]

[ ]

SCHEDULE PART 1

INTERPRETATION

This Agreement shall be interpreted according to the following provisions, unless the context requires a different meaning:

1. The headings and marginal notes and references to them in this Agreement shall be deemed not to be part of this Agreement and shall not be taken into consideration in the interpretation of this Agreement.

2. Except where the context expressly requires otherwise, references to Clauses, Sub-clauses, paragraphs, sub-paragraphs, and parts of the Schedules are references to Clauses, Sub-clauses, paragraphs, sub-paragraphs and parts of the Schedules to this Agreement and references to Sections, Appendices and Attachments (if any) are references to Sections, Appendices and Attachments to or contained in this Agreement.

3. The Schedules and Attachments (if any) to this Agreement are integral parts of this Agreement and a reference to this Agreement includes a reference to the Schedule and the Attachments (if any).

4. Words importing persons shall, where the context so requires or admits, include individuals, firms, partnerships, trusts, the Board, corporations, governments, governmental bodies, authorities, agencies, unincorporated bodies of persons or associations and any organisations having legal capacity.

5. Where the context so requires words importing the singular only also include the plural and vice versa and words importing the masculine shall be construed as including the feminine or the neuter or vice versa.

6. The language of this Agreement is English. All correspondence, notices, drawings, Design Data, test reports, certificates, specifications and information shall be in English. All operating and maintenance instructions, name plates, identification labels, instructions and notices to the public and staff and all other written, printed or electronically readable matter required in accordance with, or for purposes envisaged by, this Agreement shall be in English.

7. Save where stated to the contrary, references to any agreement or document include (subject to all relevant approvals and any other provisions of this Agreement concerning amendments to agreements or documents) a reference to that agreement or document as amended, supplemented, substituted, novated or assigned.

8. References to any Law are to be construed as references to that Law as from time to time amended or to any Law from time to time replacing, extending, consolidating or amending the same.

9. References to a public organisation (other than the Board) shall be deemed to include a reference to any successor to such public organisation or any organisation or entity which has taken over either or both the functions and responsibilities of such public organisation. References to other persons shall include their successors and assignees.

10. References to other persons (other than the Subcontractor Parties and Project Co) shall include their successors and assignees.

11. The words in this Agreement shall bear their natural meaning. The parties have had the opportunity to take legal advice on this Agreement and no term shall, therefore, be construed contra proferentem.

12. Reference to "parties" means the parties to this Agreement and references to "a party" mean one of the parties to this Agreement.

13. In construing this Agreement, the rule known as the ejusdem generis rule shall not apply nor shall any similar rule or approach to the construction of this Agreement and accordingly general words introduced or followed by the word "other" or "including" or "in particular" shall not be given a restrictive meaning because they are followed or preceded (as the case may be) by particular examples intended to fall within the meaning of the general words.

14. Where this Agreement states that an obligation shall be performed "no later than" or "within" or "by" a prescribed number of Business Days after a stipulated date or event, or "no later than" or "by" a stipulated date or event which is a prescribed number of Business Days after a stipulated date or event the latest time for performance shall be noon on the last Business Day for performance of the obligations concerned.

15. The words in this Agreement shall bear their natural meaning. The parties have had the opportunity to take legal advice on this Agreement and no term shall, therefore, be construed contra proferentem.

16. Reference to a document being in the Agreed Form is a reference to the form of the relevant document agreed between the parties and for the purpose of identification initialled by each of them or on their behalf.

17. Words in parenthesis and italics appearing after a Clause reference or a reference to a Schedule are inserted for ease of reference only. If there is any discrepancy between the Clause reference and the words appearing in parenthesis and italics after the Clause reference, the Clause reference shall prevail.

SCHEDULE PART 2

SUBCONTRACTOR PARTIES' RIGHTS AND OBLIGATIONS

NO.	ISSUE	CONTRACTOR'S RIGHTS AND OBLIGATIONS	THE SERVICE PROVIDER'S RIGHTS AND OBLIGATIONS
1.	**Obligations**	The Contractor undertakes to the Service Provider that it shall comply with its obligations under its Subcontract. Pursuant to the terms of the Construction Contract the Contractor's obligations and liabilities arising under or pursuant to its Subcontract shall expire twelve (12) years following the Actual Completion Date (as defined in the Construction Contract), save in respect of claims notified to the Contractor prior to the expiry of such period.	The Service Provider undertakes to the Contractor that it shall comply with its obligations under its Subcontract.
2.	**Claims**	The Service Provider shall be entitled to Direct Losses incurred (and to the extent arising from) any breach of this Agreement including the obligations set out herein by the Contractor.	The Contractor shall be entitled to Direct Losses incurred (and to the extent arising from) any breach of this Agreement including the obligations set out herein by the Service Provider.
3.	**Cooperation**	The Contractor agrees to, at its own expense, cooperate with the Service Provider (having regard to its obligations under its Subcontract and this Agreement) in the fulfilment of the purposes and intent of this Agreement and the relevant Subcontracts and for those purposes only it shall promptly supply to the Service Provider upon reasonable request such information as is not confidential, commercially sensitive (in the sense that its disclosure would damage a material interest of the Contractor) or is otherwise subject to impediment of law and as may be reasonably required by the Service Provider on reasonable notice.	The Service Provider agrees to, at its own expense, cooperate with the Contractor (having regard to its obligations under its Subcontract and this Agreement) in the fulfilment of the purposes and intent of this Agreement and the relevant Subcontracts and for those purposes only it shall promptly supply to the Contractor upon reasonable request such information as is not confidential, commercially sensitive (in the sense that its disclosure would damage a material interest of the Service Provider) or is otherwise subject to impediment of law and as may be reasonably required by the Contractor on reasonable notice.

No.	Issue	Contractor's rights and obligations	The Service Provider's rights and obligations
4.	**Access prior to Actual Completion**	The Contractor shall subject to the terms of the Construction Contract allow the Service Provider the right of access to the relevant Site(s) for the purposes of carrying out its obligations in accordance with the Services Contract. The Contractor shall provide to the Service Provider, at its own expense, a copy of the site rules as soon as reasonably practicable and in advance of the Service Provider 's required access. In performing the Works the Contractor shall not unreasonably hinder the Service Provider in the carrying out of its subcontract obligations	The Service Provider shall comply with all relevant safety procedures, which shall include any relevant health and safety plans for the construction of the work, the Contractor's site rules and any reasonable directions with regard to site safety issued by the Contractor from time to time. In fulfilling its subcontract obligations the Service Provider shall not unreasonably hinder the Contractor in the carrying out of the Works.
5.	**Programme and Final Commissioning Programme**	The Contractor shall make available to the Service Provider the Programme and shall consult with the Service Provider on the Final Commissioning Programme. The Contractor shall invite the Service Provider (with reasonable notice not being less than three (3) months) to witness as appropriate testing and final commissioning of facilities. The Service Provider acknowledges that the details and sequence of commissioning activities may be subject to change.	
5a	Post Completion Commissioning	The Contractor shall support the Board in the Board achieving a "clinically clean" standard by responding promptly to rectify any Construction Defects including in respect of the Handover Clean.	The Service Provider shall support the Board in the Board achieving a "clinically clean" standard by responding promptly to any request from the Board to provide Services including for the avoidance of doubt Maintenance Works in respect of the Plant or Group 1 Equipment as required.
6.	**Training**	The Contractor shall provide training on the use of equipment installed training programme to be agreed as part of Final Commissioning	

No.	Issue	Contractor's rights and obligations	The Service Provider's rights and obligations
		Programme.	
7.	**Defects**	Remedy of Construction Defects by Contractor : 1. Subject to paragraph 2 and paragraph 3 of this item 7 (Defects) of this Schedule Part 2 in respect of the Service Provider's obligations, remedy all Construction Defects . 2. Reimburse the Service Provider the reasonable cost of remedying any Construction Defect if: (i) the Contractor instructs, and the Service Provider agrees to undertake such remedial work and the Service Provider carried out such remedial work to Construction Defects on the Contractor's behalf or (ii) the Service Provider has carried out such remedial work to Construction Defects on the Contractor's behalf pursuant to paragraphs 2 or 3 of this item 7 (Defects) of this Schedule Part 2 in respect of the Service Provider's obligations 3. Following receipt of the monthly report, the Contractor shall reimburse the Service Provider's reasonable and fully substantiated expenditure in remedying any Construction Defect in accordance with this Schedule Part 2. 4. Where the Contractor is obliged to remedy any Construction Defect and any damage caused thereby, the Contractor shall comply with the terms of Board's Construction Requirements and in such a manner as to minimise interference with the use and maintenance of the Facilities and within a reasonable time having regard to the nature of the Construction Defects and damage. **General**: Carry out de-snagging and remedial works in consultation with the	Remedy of Construction Defects by the Service Provider: 1. Promptly inform the Helpdesk and the Contractor of any Construction Defect (and in any event within two days of becoming aware of it). 2. To the extent that the Construction Defect is considered by the Service Provider, acting reasonably, to be the cause of a Unavailability Failure or Major Performance Failure (as defined in Schedule Part 12 of the Project Agreement and Schedule Part 14 of the Project Agreement) and (i) if the Contractor is not proceeding diligently to rectify such Construction Defect; or (ii) the Service Provider considers (acting reasonably) that the existence or any immediate failure to rectify such Construction Defect is reasonably likely to give rise to the right of Project Co to terminate the Services Contract, and provided that the Service Provider has given the Contractor such opportunity to rectify the Construction Defect as the circumstances reasonably allow, then the Service Provider may elect to remedy such Construction Defect as required to ensure compliance as soon as reasonably practicable within the terms of the Service Requirements (as defined in Schedule Part 12 of the Project Agreement and Schedule Part 14 of the Project Agreement). 3. To the extent the Service Provider is able, carry out such temporary repair in respect of the Construction Defects referred to in paragraph 2 above as the Service Provider considers is required to mitigate

No.	Issue	Contractor's rights and obligations	The Service Provider's rights and obligations
		Service Provider so as to minimise disruption and interference with the performance of the Service Provider's obligations under its Subcontract.	the risk of Pass-Down Liability and/or risk of termination of the Services Contract, provided that the cost of such temporary repairs shall be not be disproportionate to the costs of likely Pass-Down Liability and/or the costs of final remedy/repair 4. Provide monthly reports of work done under paragraphs 2 and paragraph 3. Following receipt of the monthly report, the Contractor shall reimburse the Service Provider's Direct Losses in remedying any Construction Defect in accordance with this Schedule Part 2. 5. Where the Service Provider remedies any Construction Defect and any damage caused thereby, the Service Provider shall comply with the terms of Board's Construction Requirements and in such a manner as to minimise interference with the use and maintenance of the Facilities; and within a reasonable time having regard to the nature of the Construction Defects and damage. General: 1. Make safe the Construction Defect and take reasonable steps to mitigate its effect upon availability of Facilities and performance of Service Provider's services. 2. Co-operate to facilitate efficient and effective remedying by the Contractor of a Construction Defect.
8.	**Manuals and**	1. The Contractor shall provide the Service Provider with the information on maintenance regimes and life expectancy not	1. The Service Provider shall provide the specific templates for life cycle analysis information,

No.	Issue	Contractor's rights and obligations	The Service Provider's rights and obligations
	information	later than six (6) months before the Actual Completion Date, and in accordance with the templates provided by the Service Provider, pursuant to paragraph 1 of this item 8 (Manuals and information) of this Schedule Part 2 in respect of the Service Provider's obligation. 2. The Contractor shall provide the Service Provider with access to electronic database for O&M manuals not later than six (6) months before the Actual Completion Date. 3. The Contractor shall provide the Service Provider with vendor information such as plant information, operating and maintenance manuals, equipment schedules, the health & safety file (excluding final handover documentation), room data sheets, manufacturers warranties and guarantees, draft final drawings and draft final specifications (the "Documents") not later than three (3) months before the Actual Completion Date. The Service Provider shall meet on a regular basis with the Contractor to agree the format and the content of the Documents. The Contractor shall provide the Service Provider with updates of the draft Documents as appropriate. 4. Final drafts of the Documents including commissioning results shall be issued on or before the Actual Completion Date in hard copy and electronic format. 5. The Contractor grants to the Service Provider, free of charge, an irrevocable, non exclusive licence (carrying the right to grant sub-licences) to use the Documents (including relevant third party intellectual property rights) for the purposes of this Agreement and the Services Contract.	including maintenance and life expectancy provision within 1 month of the date of this Agreement.

No.	Issue	Contractor's rights and obligations	The Service Provider's rights and obligations
9.	**Subcontractor Design Review Process Reviewable Design Data**	Without prejudice to the other rights and obligations of the Contractor and The Service Provider in this item 9 (Subcontractor Design Review Process Reviewable Design Data), during the development and finalisation of the design and specification for the Works, the Contractor shall submit the Reviewable Design Data to the Service Provider for comment in accordance with the provisions set out in [Schedule Part 8] of the Construction Contract (for the purpose of this obligation, all references to Project Co's Representative under Schedule Part 8 of the Construction Contract being deemed also to be references to "the Service Provider"). The Contractor shall liaise with the Service Provider to agree incorporation of the Service Provider's comments on the Reviewable Design Data as set out in the columns of the Service Provider's obligations. The Contractor shall not be obliged to incorporate any comments if these will cause the Contactor to be in breach of the Project Co's Proposals and or the Board's Construction Requirements or place the Contractor in breach of its Construction Contract. Upon incorporation by the Contractor of the Service Provider's comment (or upon the receipt of a "no comment" (deemed or otherwise)) the Reviewable Design Data shall be deemed to satisfy the criteria set out in the columns of the Service Provider's obligations. Any dispute between the Contractor and the Service Provider as to the comments to be incorporated in the Reviewable Design Data shall be referred to the Fast Track Interface Dispute Resolution Procedure. The Contractor can proceed at risk whilst any dispute is being settled.	The Service Provider shall respond within four (4) business days or at such other period of time as may be agreed between the Parties, to ensure the Programme is not adversely affected Failure of the Service Provider to comment on the Reviewable Design Data within the given timescale shall be deemed "no comment". The Service Provider shall liaise with the Contractor to agree incorporation of the Service Provider's comments on the Reviewable Design Data where the comments meet the criteria set out below. The Service Provider may raise comments on the following grounds: • Non compliance with Schedule Part 6; • Non compliance with CDM Regulations; or • Excessive energy use. The Service Provider may raise comments on other grounds, however the Contractor shall not be obliged to incorporate such comments if elects not to for any reason. Any dispute between the Contractor and the Service Provider as to the comments to be incorporated in the Reviewable Design Data shall be referred to the Fast Track Interface Dispute Resolution Procedure.

<table>
<tr><th>No.</th><th>Issue</th><th>Contractor's rights and obligations</th><th>The Service Provider's rights and obligations</th></tr>
<tr>
<td>10.</td>
<td>Delay</td>
<td>
1. The Contractor shall provide the Service Provider with no less than 3 months' notice of any delay or potential delay (a "Delay Notice") to the Completion Date.

2. Subject to paragraph 3 of this item 10 (Delay) of this Schedule Part 2 in respect of the Contractor's obligations, if a Delay Notice is issued less than 3 months before the Completion Date or if there is a delay and no Delay Notice has been served, the Contractor shall pay to the Service Provider a lump sum amount to compensate the Service Provider for any costs reasonably incurred as a consequence of the delay capped at the figures set out in the table below:
<table>
<tr><th>Delay Notice Period</th><th>Delay Damages Caps</th></tr>
<tr><td>If a Delay Notice is issued more than 3 months before the Completion Date.</td><td>£0</td></tr>
<tr><td>If a Delay Notice is issued more than 2 months (but less than 3 months) before the Completion Date.</td><td>£20,000</td></tr>
<tr><td>If a Delay Notice is issued less that 2 months before the Completion</td><td>£50,000</td></tr>
</table>
</td>
<td>
The Service Provider shall use its best endeavours to mitigate costs that it may incur or incurs as a result of any delay to the Actual Completion Date.

It shall be a condition precedent to the Service Provider's right to be paid Delay Damages by the Contractor that the Service Provider shall provide the Contractor with full information within 4 weeks of receiving a Delay Notice from the Contractor of the arrangements that it is putting in place to minimise and mitigate costs including the redeployment or alternative utilisation of staff.

The Service Provider shall substantiate any claim for losses to the Contractor's reasonable satisfaction.
</td>
</tr>
</table>

No.	Issue	Contractor's rights and obligations	The Service Provider's rights and obligations
		Date or where no Delay Notice has been served.	
		For the avoidance of doubt the amounts specified in the table ("Delay Damages") above shall be the maximum amount payable in respect of each Delay Notice that is served or where no Delay Notice has been served. 3. Subject to paragraph 4 of this item 10 (Delay) of this Schedule Part 2 in respect of the Contractor's obligations, the Contractor shall not pay Delay Damages to the Service Provider in the occurrence of Compensation Events, Force Majeure or Relief Events. 4. Where the Contractor is able to recover the Service Provider delay losses in respect of Compensation Events, Force Majeure or Relief Events under the Construction Contract (including as provided for under any insurance policy), it shall do so and pass on such monies to the Service Provider.	
11.	**Change**	The Contractor agrees that, prior to proposing any Sub-Contractor Change, the Contractor shall: 1. consult with the Service Provider in relation to the impact of the Sub-Contractor Change on the Service Provider and have due regard to all of the Service Provider's comments in respect of that proposed Sub-Contractor Change; and 2. use all reasonable endeavours to agree with the Service Provider any impact that the Sub-Contractor Change shall have on the performance of the Services or cost of performing the Services;	The Service Provider agrees that, prior to proposing any Sub-Contractor Change, the Service Provider shall: 1. consult with the Contractor in relation to the impact of the Sub-Contractor Change on the Contractor and have due regard to all of the Contractor's comments in respect of that proposed Sub-Contractor Change; and 2. use all reasonable endeavours to agree with the Contractor any impact that the Sub-Contractor Change shall have on the performance of the Works

No.	Issue	Contractor's rights and obligations	The Service Provider's rights and obligations
			or cost of performing the Works;
12.	**Helpdesk**	Use reasonable endeavours to report all Defects to the Helpdesk excepting defects that do not relate to the performance of its own subcontract obligations. To comply with Helpdesk protocol.	Use reasonable endeavours to report all Defects to the Helpdesk excepting defects that do not relate to the performance of its own subcontract obligations. To comply with Helpdesk protocol. To inform the Contractor of defects within [2] Business Day of defects being reported to the Helpdesk.
15	**Project Co's proposals**	The Contractor confirms it will design and contract the Works in accordance with the Project Co's Proposals.	
22	**Plant Design**	The Contractor shall, acting reasonably, provide the Service Provider with specific design information relating to the redundancy of plant, single point of failure of plant and related access issues, identifying if possible specific items that require consideration by the Service Provider, in sufficient time to allow the Service Provider to respond.	The Service Provider shall, where the Contractor has provided it with such information, and where it considers it reasonable and necessary, shall comment on such information, taking into consideration the timescales in the Review Procedure.
23	**Early Completion**	If the Contractor anticipates that the Actual Completion Date will be earlier than the Completion Date, then the Contractor shall pay an amount to the Service Provider for the unavoidable, reasonable and fully evidenced costs that will be incurred by the Service Provider as a consequence of completion occurring prior to the Actual Completion Date. Any costs payable by the Contractor shall not include any costs that are included within the FM Mobilisation Costs or Monthly Service Payments that are payable in accordance with the Services Contract.	The Service Provider will provide the Contractor with all information reasonably requested by it to evidence (i) its estimate of the costs that it will incur; (ii) that such costs have actually been incurred; and (iii) that such costs do not form part of the FM Mobilisation Costs or Monthly Service Payments that are payable in accordance with the Services Contract.

SCHEDULE PART 3

INTERFACE DISPUTE RESOLUTION PROCEDURE

Part 1

1. DEFINITIONS

"**Acknowledgement Notice**" means the written acknowledgment of receipt from the Responding Party to the Referring Party of the Referral Notice.

"**Adjudication**" means adjudication by an Adjudicator pursuant to this Schedule Part 3.

"**Adjudicator**" means a sole person appointed in accordance with Part 2 of this Schedule Part 3.

"**Court**" means the courts of Scotland

"**Default Interest Rate**" means 2% over LIBOR

"**Discipline**" means profession, trade or discipline.

"**Dispute**" means any dispute, claim or difference between the Subcontractor Parties arising out of or relating to this Agreement.

"**Party**" means the party to any Dispute.

"**Referral Notice**" means any notice from a Referring Party to the Responding Party in writing requiring the referral of any Dispute to adjudication pursuant to the Interface Dispute Resolution Procedure.

"**President**" means the President or the Vice President for the time being of the Chartered Institute of Arbitrators (Scottish Branch), or if no such office exists within the Chartered Institute of Arbitrators, then the nearest equivalent position within the Chartered Institute of Arbitrators or if no such position exists, or the person holding such office is unwilling or unable to act within 1 Business Day of being requested to do so, the President for the time being of the Law Society of Scotland.

"**Panel of Adjudicators**" means the panel set out in Part 3 of this Schedule Part 3 as may be updated from time to time in accordance with Part 2 of this Schedule Part 3.

"**Referring Party**" means, in relation to any Dispute, the Party who refers a Dispute to adjudication under the Interface Dispute Resolution Procedure.

"**Responding Party**" means, in relation to any Dispute, the Party who is not the Referring Party.

2. SUBMISSION OF DISPUTE TO PROJECT CO

Without prejudice to the right of any Party to refer any dispute to Adjudication at any time, in the event of any Dispute, a Subcontractor Party may submit the Dispute to Project Co,. Project Co's decision shall be binding unless a Subcontractor Party appeals to Adjudication within 15 Business Days. Project Co shall not in any way whatsoever incur liability arising out of or in connection with its decision on the consequences thereof. Any Subcontractor Party involved in a Dispute which has been submitted to Project Co shall co-operate fully with

Project Co and provide to Project Co at that Subcontractor Party's own cost all information reasonably requested by Project Co.

3. SUBMISSION OF DISPUTE TO ADJUDICATION

Any Dispute may be referred to Adjudication at any time, in which case the procedure below shall apply.

(a) The Dispute shall be referred to the Adjudicator.

(b) The procedure shall commence when the Referring Party gives a Referral Notice to the Responding Party in writing requiring the referral of any Dispute to Adjudication pursuant to this paragraph. The Referral Notice shall:

(i) be addressed to the Responding Party;

(ii) refer to this paragraph 3;

(iii) identify the nature of the Dispute with sufficient detail to enable the Responding Party to identify and respond to the issues; and

(iv) identify at least one and not more than three persons selected by the Referring Party as the Adjudicator.

(c) The Responding Party shall within 3 Business Days of receipt:

(i) give the Acknowledgement Notice;

(ii) indicate concurrence in one of the nominees or propose at least one and not more than three alternatives; and

(iii) identify any other Dispute which is referrable to adjudication which they wish to be determined jointly and concurrently with the adjudication to which the Referral Notice applies.

(d) The timetable for Adjudication shall be as follows:

(i) each Party may submit written statements or responses to the other Party, together with copies of any further documents on which that the Party wishes to rely, such information to be copied to the Adjudicator within 20 days from the referral of the Dispute to the Adjudicator; and

(ii) the Adjudicator shall deliver a written reasoned decision on the Dispute:

(1) within 28 days from the referral of the Dispute to the Adjudicator; or

(2) within such other period as the Party may agree after the Referral Notice has been issued,

provided that the Adjudicator may extend the period of 28 days by up to 14 days with the consent of the Referring Party.

(e) If the Adjudicator fails to submit a final determination by the time required under this paragraph 3(e), the Adjudicator shall be deemed to be unwilling or unable to act, and another adjudicator may, at the request of either Party by notice in writing to the other, be appointed in accordance with Part 2 of this Schedule, and the appointment of the previous Adjudicator shall cease unless before the appointment of the new Adjudicator, the appointed Adjudicator shall have submitted his final determination.

To avoid doubt, upon appointment of the new Adjudicator, the Dispute shall be referred directly to the new Adjudicator for determination.

(f) The Adjudicator may at any time prior to giving its final determination seek further information from the Parties, and the Parties will use reasonable endeavours to comply with such request.

4. SUBMISSION OF DISPUTE TO THE COURTS

All Disputes, to the extent not finally resolved by means of Project Co's decision or by Adjudication shall be referred to the courts of Scotland who shall have exclusive jurisdiction to hear and settle any action, suit, proceeding or dispute in connection with the Agreement and the Parties irrevocably submit to the jurisdiction of those courts.

5. POWERS

Any Adjudicator or Court envisaged by this Schedule Part 3 shall have the power to open up, review and revise any opinion, decision, certificate, account, requirement or notice and subject to paragraph 4 of Part 2 of this Schedule Part 3 in relation to the Adjudicator, to determine all matters in dispute as it sees fit.

6. SUBMISSION OF DISPUTE OF AN EXPERT

If there is any Dispute as to the terms of the Deed of Novation at Schedule Part 4, or to the amendment to be made to this Agreement in accordance therewith either Party to this Agreement or such Deed may require it to be resolved by Queen's Counsel, to be agreed between the Parties, or appointed on the application by either Party to the Dean of the Faculty of advocates in Edinburgh. Such Counsel shall act as an expert, having regard to the timescales and other matters envisaged by this Agreement and may take the initiative to obtain such expert evidence as he considers appropriate and necessary.

Part 2

Appointment and Powers of the Adjudicator

1. INTRODUCTION

The Adjudicator shall be appointed in the following manner:

(a) first, the Parties must choose an Adjudicator in accordance with Part 1 and Part 2 of this Schedule; and

(b) secondly, the Parties must conclude an agreement to provide adjudication services with the Adjudicator.

2. SELECTION OF ADJUDICATOR

2.1 Unless the Parties agree otherwise, no person may be an Adjudicator pursuant to this Schedule, unless such person:

(a) has expertise and appropriate qualifications as set out in Part 3 in a Discipline related to the issue(s) in respect of which a Dispute has arisen, or may arise; and

(b) is, at the time of nomination and appointment, currently employed in the relevant Discipline.

2.2 If:

(a) after a Referral Notice has been issued, the Parties are unable to agree upon a person to become an Adjudicator in relation to a particular Discipline within 5 Business Days of the Referral Notice; or

(b) any Adjudicator is unable or unwilling to act, and the Parties are unable to agree upon any new Adjudicator within 3 Business Days thereafter,

either Party may refer that dispute to the President who shall nominate an Adjudicator for the relevant Dispute.

2.3 Following concurrence on one of the nominees in accordance with paragraph 3(c)(ii) of Part 1 or nomination in accordance with paragraph 2.2 of this Part, the Referring Party shall appoint the relevant nominee as Adjudicator.

3. APPOINTMENT OF ADJUDICATOR

3.1 Once the Adjudicator has been agreed or determined, the Referring Party shall, as soon as practicable thereafter, send a notice to the Adjudicator which shall include the following:

(a) the names of the Parties and summaries of the Dispute(s);

(b) copies of the notices, and attachments, issued in respect to such Dispute;

(c) a request for confirmation of the Adjudicator's scale of fees and expenses;

(d) a statement that the Adjudicator's fees and expenses will be paid as provided in paragraph 4.2 of this Part;

(e) a statement that the information disclosed in the notification is confidential and that it should not be disclosed, copied or revealed whether the appointment is accepted or not;

(f) a copy of this Schedule; and

(g) a request for an immediate response.

3.2 If, using all reasonable means, an Adjudicator is unable to be contacted within 3 Business Days, that Adjudicator will be deemed to be unable to act, and another Adjudicator may be chosen and notified in accordance with the above.

3.3 The Parties shall use their reasonable endeavours to ensure that the terms of the contract of appointment of an Adjudicator are agreed within 4 Business Days following confirmation from the Adjudicator of his willingness to act.

3.4 If the Parties are unable to agree with an Adjudicator the amount of his remuneration or other terms of appointment then:

(a) if one Party is willing to agree to what the Adjudicator proposes and the confirmation referred to at paragraph 3.1(g) has been given, such Dispute shall be referred as soon as practicable for determination by the President; or

(b) if neither Party is willing to agree what the Adjudicator proposes, or the confirmation referred to at paragraph 3.1(g) above has not been given, the Adjudicator will be deemed to be unwilling to act and another Adjudicator may be chosen in accordance with the above procedure.

4. POWERS OF THE ADJUDICATOR

4.1 The Adjudicator shall, subject to this paragraph and to the agreement of the Parties, conduct his determination in such manner as he shall in his sole and unfettered discretion see fit, provided that he acts impartially and, without limitation:

(a) all written communications to and from the Adjudicator and any Party shall be simultaneously copied to the other Party;

(b) the Adjudicator shall not conduct any oral hearing or otherwise discuss the issues in Dispute other than in the presence of both Parties; and

(c) the Adjudicator may act inquisitorially and may take the initiative in ascertaining the facts and the law relevant to the Dispute.

4.2 The Parties shall each bear their own costs. The parties and shall share the fees and expenses of the Adjudicator equally unless the Adjudicator shall otherwise so determine.

4.3 Any decision of an Adjudicator shall be final and binding unless and until set aside or varied by the Court.

4.4 All matters decided by any Adjudication shall be performed or otherwise carried into effect on the date determined by the Adjudicator or in default of any such determination not later than 5 Business Days after the date of such Adjudicator's decision provided that where the Adjudicator certifies or otherwise decides that a sum (in this paragraph the "Amount") is due from one Party (in this paragraph the "Payee") to the other Party (in this paragraph the "Payer") the amount shall not become due and payable as a debt until 5 Business Days after the day on which the Payee duly demanded the same in writing. The Amount shall bear interest at the Default Interest Rate from the date the same becomes due and payable until the date of payment.

4.5 The Parties hereby agree that the Adjudicator (which expression shall include for the purpose of this paragraph any employee or agent of the Adjudicator) shall not be liable for anything done or omitted in the discharge or purported discharge of his functions unless the act or omission is in bad faith.

5. REFERENCE TO THE PRESIDENT

If, as permitted by this Schedule, a Party refers any issue concerning the nomination or appointment of an Adjudicator or other matter to the President:

(a) the Party referring the matter will forward a copy of this Schedule to the President;

(b) the President's decision or determination, or that of its nominee, shall be final and binding upon the Parties; and

(c) the Parties shall meet the President's costs equally unless such person on any particular occasion determines otherwise, in which case, on that occasion, the costs shall be paid in accordance with that the President's decision.

6. ADJUDICATOR NOT ARBITRATOR

The Adjudicator shall not act as an arbitrator nor as a mediator, conciliator, expert or in any similar role.

7. RELEVANT DISCIPLINE

Once an Adjudicator is appointed, neither such appointment nor any determination of an Adjudicator shall be invalid solely on the grounds that:

(a) the Adjudicator does not have experience in a Discipline relevant or appropriate to the issues raised by the relevant Dispute; or

(b) the Adjudicator does not satisfy any of the requirements of paragraph 2.2 of this Part.

Part 3

Panel of Adjudicators

(a) **Discipline**	(b) **Institution**	(c) **Qualification**
Accountant	Institute of Chartered Accountants	Fellow of not less than 10 years standing
Construction		
Architectural	Royal Incorporation of Architects in Scotland	
Civil/Structural Engineering	Institution of Civil Engineers (Scottish Branch)	
Quantity Surveying/ Project Management	Institution of Chartered Surveyors (Scottish Branch)	
Building Services (M&E)	The Chartered Institution of Building Services Engineers	
Health & Safety	Institution of Planning Supervisors	
Legal	Faculty of Advocates	Senior advocate of not less than 10 years call.

Part 4

1. EXPERT FAST TRACK DISPUTE RESOLUTION PROCEDURE

1.1 Any Dispute which relates to matters which are expressly stated in this Agreement to be subject to the Fast Track Interface Dispute Resolution Procedure may at any time be referred direct to an expert without observing paragraphs 2 and 3 of Part 1 of this Schedule Part 3 and the following provisions will apply:

(a) either party may upon written notice to the other refer the Dispute to an expert named by the parties to act as expert who shall be an independent person with appropriate qualifications and experience (the "Reference"). In the event that the parties are unable to agree upon an expert, the provisions of paragraph 1.1(f) shall operate;

(b) the expert shall act as an expert and not as an arbitrator and shall act fairly and impartially. The expert shall have the power to request either party to provide him with such statements (which shall be written unless otherwise specifically required), documents or information that he may in his discretion determine. He may attend the Hospital in connection with the carrying out of his duties under this Dispute Resolution Procedure;

(c) the expert shall have power to revise or overrule any decision or instruction of the parties;

(d) the expert shall, within ten (10) Business Days of the date of Reference, provide written notice of his decision to the parties. If so requested by any party, the expert shall provide written reasons for his decisions within five (5) Business Days of any such request, which request shall be made within five (5) Business Days of receipt of the expert's decision;

(e) the expert's fees shall be payable by such party as the expert may, at his discretion determine and in the absence of any such determination, in equal shares; and

(f) if such expert dies or becomes unwilling or unable to act in relation to this Agreement (or be it a firm or partnership) is dissolved or discontinued or (being a company) is the subject of any bankruptcy or insolvency proceedings then the parties shall agree a substitute within ten (10) Business Days of the service by one party upon the other of a written request to agree upon a substitute expert. In the event that they cannot so agree, or have been unable to agree upon an expert pursuant to paragraph 1.1(a) within five (5) Business Days of their failure to do so either party may request the President or Vice President for the time being of the [British Institute for Facilities Management (in relation to facilities management disputes)], the Institute of Chartered Accountants (in relation to financial disputes) or the Institution of Civil Engineers, the Royal Institute of British Architects or the Royal Institute of Chartered Surveyors in relation to building or construction disputes as appropriate to appoint an appropriate expert. Should the parties be unable to agree upon which appointing body should appoint the expert, the appointment shall be made by the President for the time being of the Law Society of Scotland.

1.2 The expert's decision shall be final and binding and shall be given effect to by the parties.

SCHEDULE PART 4

Form of Deed of Novation (Replacement Subcontractor)

[CONTRACTOR]

and

[SERVICE PROVIDER]

and

[PROJECT CO]

and

[Exit Co]

and

[New Co]

DEED OF NOVATION
OF INTERFACE AGREEMENT

[• Project •]

BETWEEN:

(1) [[ ] (registered under number [ ]) whose registered office is at [ ] (the **"Contractor"**);

(2) [ ] (registered under number [ ]) whose registered office is at [ ] (the **"Service Provider"**);]

(3) [[ ] (registered under number [ ]) whose registered office is at [ ] (**"Project Co"**);

(4) [ ] (registered under number [ ]) whose registered office is at [ ] (**"Exit Co"**);

(5) [[ ] (registered under number [ ]) whose registered office is at [ ] (**"New Co"**)

WHEREAS:

(A) The Remaining Parties and Exit Co have entered into the Interface Agreement dated [ ] 20[ ] and into various Subcontracts as referred to in the Interface Agreement.

(B) Exit Co wishes to be release and discharged from [all/part] future performance of [its] [their] liabilities under the Interface Agreement.

(C) Project Co and New Co have entered into the New Subcontract.

(D) The other parties have agreed to release and discharge Exit Co upon New Co undertaking to perform the obligations and accept the liability of Exit Co under the Interface Agreement and to be bound by the terms of the Interface Agreement subject to as provided for in this Deed.

NOW THIS DEED WITNESSES as follows:

1. This Deed shall be interpreted in accordance with clause [●] of the Interface Agreement.

2. In this Deed, words and expressions shall have the meanings as are assigned to them in the Interface Agreement unless otherwise stated. In addition, the following expressions shall have the meanings now ascribed to them:

"Effective Date" means [the date that New Co is obliged to perform its obligations under the terms of the New Subcontract]/ [the date of this Deed];

"New Subcontract" means the subcontract between Project Co and New Co dated [ ] 20[ ];

"**Remaining Parties**" means [Project Co and [●]].

3. COMMENCEMENT

This Deed shall become effective on the Effective Date.

4. RELEASE AND DISCHARGE

4.1 Without prejudice to the accrued rights and liabilities of Exit Co under the Interface Agreement, the Remaining Parties release and discharge Exit Co from performance of obligations under the Interface Agreement arising on or after the Effective Date and from all claims and demands whatsoever in respect thereof.

4.2 Without prejudice to the accrued rights and liabilities of the Remaining Parties under the Interface Agreement, Exit Co releases and discharges the Remaining Parties from performance of obligations under the Interface Agreement arising on or after the Effective Date and from all claims and demands whatsoever in respect thereof.

5. REPLACEMENT BY NEW CONTRACTOR

5.1 New Co is granted and accepts all rights and obligations of Exit Co and agrees to perform all the obligations of Exit Co arising on or after the Effective Date under the Interface Agreement and to be bound by all the terms and conditions of the Interface Agreement. [The parties agree that NewCo shall not assume any liability in respect of a matter arising prior to the Effective Date.]

6. GOVERNING LAW

This Agreement is governed by the laws of Scotland and the parties agree that the courts of Scotland shall have exclusive jurisdiction to hear and settle any action, suit, proceeding or dispute in connection with this Agreement and irrevocably submit to the jurisdiction of those courts.

IN WITNESS whereof the Parties have executed and delivered this Agreement on the date first before written.

SIGNED for and on behalf of)
[CONTRACTOR])

at

on the day

of 2015

by

Director

Director/Secretary

SIGNED for and on behalf of)
[SERVICE PROVIDER])
)

at

on the day

of 2015

by

Director

Director/Secretary

SIGNED for and on behalf of)
[Project Co])
)

at

on the day

of 2015

by

Director

Director/Secretary

SIGNED for and on behalf of)
[Exit Co])
)

at

on the day

of 2015

by

Director

Director/Secretary

SIGNED for and on behalf of)
[New Co])
)

at

on the day

of 2015

by

Director

Director/Secretary

SCHEDULE PART 5

FM Guide to Design & Construction

SCHEDULE PART 6

FM's Requirements

[Refer to Excel Spreadsheet]

SCHEDULE PART 7

[GUARANTEE]

THIS GUARANTEE is made the

Between:

(1) [**BOUYGUES ENERGIES & SERVICES S.A.S** (company number RCS Versailles 775 664 873) whose registered office is at 19 Rue Stephenson, 78180 Montigny-le-Bretonneux, France][**BROOKFIELD MULTIPLEX PTY Ltd,** whose registered office is at Level 22, 135 King Street, Sydney, Australia (the "**Guarantor**"); and

(2) [**BROOKFIELD MULTIPLEX CONSTRUCTION EUROPE LIMITED** (registered under number) whose registered office is [ ]] [**BOUYGUES ENERGIES & SERVICES FM UK** LIMITED (registered under number 04243192) whose registered office is at Waterloo Centre, Elizabeth House, 39 York Road, London SE1 7NQ] (the "**Beneficiary**")

Whereas:

(A) This Guarantee is supplemental to an interface contract, as amended or varied from time to time (the "**Interface Agreement**") made between IHS Lothian Limited, the Beneficiary and [●] a wholly-owned subsidiary of the Guarantor (the "**Subsidiary**"). Pursuant to the terms of the Interface Agreement, parties have agreed to procure the provision of a guarantee when required under the terms of the Interface Agreement.

IT IS HEREBY AGREED AS FOLLOWS:

1. In this Guarantee, words and expressions shall have the meanings as are assigned to them in the Interface Agreement unless otherwise stated. In addition the following expressions shall have the meanings now ascribed to them:

2. In consideration of entering into the Interface Agreement with the Beneficiary, the Guarantor irrevocably and unconditionally guarantees to the Beneficiary, both as guarantor and principal debtor:

   (a) the due and punctual observation and performance by its Subsidiary of all duties, obligations, warranties and undertakings (whether actual, or contingent, present or future, express or implied) to be observed and performed on the part of the Subsidiary under or pursuant to the Interface Agreement when they become due and performable according to the terms of the Interface Agreement;

   (b) the satisfaction of all claims, demands, losses, damages, liabilities, costs, fees, expenses and interest whatsoever arising in any way directly or indirectly out of any default by the Subsidiary of the Interface Agreement;

   (c) the satisfaction of any judgment (including of interest) of any court, adjudicator or competent tribunal in respect of the Subsidiary's liability to the Beneficiary in respect of the performance of the Interface Agreement;

   (d) that it will indemnify on demand against any loss or liability suffered by the Beneficiary if any obligation of the Subsidiary in the Interface Agreement is or becomes void, voidable or unenforceable or invalid (save where the Interface Agreement is void, voidable, unenforceable or invalid for reasons of illegality) but only to the extent that such Interface Agreement would not be unenforceable, invalid or illegal against or in relation to any other person performing the obligations under the Interface Agreement in lieu of the Subsidiary.

provided always that:

(i) the Guarantor's liability under this Guarantee will be limited to the liability of the Subsidiary under the Interface Agreement, or, in respect of liability under clause 2(d), to the liability that the Subsidiary would have had under the Interface Agreement, had the obligations thereunder not been or become void, voidable, unenforceable or invalid; and

(ii) the Guarantor shall be entitled to rely on any defences that the Subsidiary may have had under the Interface Agreement.

3. The Guarantor undertakes that, whenever the Subsidiary does not pay any amount when due under or in connection with the Interface Agreement, the Guarantor shall on demand pay that amount as the principal debtor within five (5) Business Days of the receipt by the Guarantor of a written notice in accordance with clause 17 below.

4. Subject to clause 3 above, the Guarantor agrees that the Beneficiary in the enforcement of its rights hereunder may proceed against the Guarantor as if it were a party to the Interface Agreement. The Guarantor hereby waives any right to require the Beneficiary to proceed against the Subsidiary or to pursue any other remedy whatsoever which may be available to the Beneficiary before proceeding against the Guarantor.

5. The obligations and liabilities of the Guarantor under this Guarantee shall be effective from the date hereof and shall not be affected, discharged or released in any way by any circumstances (except by a written discharge between the Guarantor and the Beneficiary) which would otherwise release the Guarantor from its obligations hereunder (and the Guarantor hereby waives any entitlement it may have to notice of any such circumstances), including:

(a) any variation or amendment of the Interface Agreement (including without limitation extension of time) or any concession or waiver by the Beneficiary in respect of the Subsidiary's obligations;

(b) the Interface Agreement or any provision of the Interface Agreement being or becoming illegal, invalid, void, voidable or unenforceable;

(c) any forbearance or waiver of any right of action or remedy the Beneficiary may have against the Subsidiary or negligence by the Beneficiary in enforcing any such right of action or remedy;

(d) any bond, undertaking, security or other guarantee held or obtained by the Beneficiary for all or any parts of the obligations whose performance is hereby guaranteed or any release or waiver thereof;

(e) any legal limitation or incapacity relating to the Subsidiary; or

(f) any other fact, circumstance, act, event, omission or provision of statute or law.

6. The Guarantor hereby further agrees with the Beneficiary that if the Subsidiary goes into liquidation and the liquidator shall disclaim the Interface Agreement, the liability of the Guarantor under this Guarantee shall remain in full force and effect in respect of any claims, demands, losses, damages, costs, fees, expenses and interest related to such liquidation or the termination of or under the Interface Agreement consequent thereon.

7. Without prejudice to clause 5, the Guarantor expressly confirms that it intends that this Guarantee shall extend from time to time to any (however fundamental) amendment, variation, increase, extension or addition of, under or to the Interface Agreement for any purpose and any fees, costs and/or expenses associated with such variation, increase, extension or addition.

8. The Guarantor must not (while the Subsidiary has any obligations or liabilities (actual or contingent) under the Interface Agreement), exercise any:

(a) rights of subrogation, contribution and indemnity;

(b) right to take the benefit of or enforce any security or other guarantee or indemnity for the Subsidiary's obligations held by the Beneficiary; and

(c) right to prove or claim in the bankruptcy, liquidation, administration or other insolvency proceedings of the Subsidiary,

to the extent that in doing so would be in competition with, or contrary to the interests of, the Beneficiary. Any amount recovered as a result of the exercise of any such rights contrary to this clause shall be held on trust for the Beneficiary and shall be paid to the Beneficiary immediately upon receipt of such amount by the Guarantor. The Guarantor warrants to the Beneficiary that it has not taken any security from the Subsidiary in relation to this Guarantee and agrees not to do so. Any security taken by the Guarantor in breach of this provision and all moneys at any time received in respect thereof shall be held on trust for the Beneficiary.

9. All payments by the Guarantor under this Guarantee in respect of the Interface Agreement shall be made in full, without set-off or counterclaim and, subject to clause 10 of this Guarantee, free and clear of any deductions or withholdings in immediately available, freely transferable, cleared funds in Sterling for value on the date specified in the Beneficiary's demand to the account specified below: [●].

10. If at any time the Guarantor is required by law to make any deduction or withholding in respect of any taxes, duties or other charges or withholdings from any payment due hereunder, the sum due from the Guarantor in respect of such payment shall be increased to the extent necessary to ensure that, after the making of such deduction or withholding, the Beneficiary receives on the payment date and retains (free of any liability in respect of such deduction or withholding) a net sum equal to the sum which it would have received had no such deduction or withholding been required to be made.

11. No payment to the Beneficiary under this Guarantee in respect of the Interface Agreement or pursuant to any judgment or order of any court or otherwise shall operate to discharge the obligations of the Guarantor in respect of which it was made unless and until payment in full shall have been received in Sterling and, to the extent that the amount of any such payment shall on actual conversion into Sterling fall short of the amount of the obligation expressed in Sterling, the Beneficiary shall have a further and separate cause of action against the Guarantor for the recovery of such sum as shall after conversion into Sterling be equal to the amount of the shortfall.

12. This Guarantee is a continuing security and accordingly shall cover all of the obligations and liabilities of the Subsidiary to the Beneficiary under the Interface Agreement and shall remain in full force and effect until all the obligations of the Subsidiary shall have been paid, carried out, completed or discharged in full in accordance with the Interface Agreement save that if the Subsidiary satisfies the Net Tangible Asset threshold requirements set out in Clause 14 of the Interface Agreement this Guarantee shall cease to be in force and effect ..

13. For the benefit of the Beneficiary and the Subsidiary, the Guarantor waives any right or remedy that it has or may have to subrogation, indemnification or payment on any other basis by the Subsidiary and any other remedy against the Subsidiary (each a "Relevant Right") by reason of or in connection with the performance of the Guarantor's obligations under this Guarantee or the obligations under the Interface Agreement in circumstances where the Subsidiary promotes, enters into, or implements a voluntary arrangement (as defined in section 1(1) of the Insolvency Act 1986) or formal scheme of arrangement (under Part 26 of the Companies Act 2006), in each case as amended or re-enacted from time to time, or any analogous procedure in any jurisdiction. Damages shall not be an adequate remedy for the Beneficiary or the Subsidiary in respect of a breach of this clause and the parties shall

consent to any application brought by the Beneficiary or the Subsidiary for an interdict to prevent any such Relevant Right being enforced.

14. If any moneys paid to the Beneficiary under the Interface Agreement by the Subsidiary have to be repaid to the Subsidiary by the Beneficiary by virtue of any provision or enactment relating to bankruptcy, insolvency or liquidation for the time being in force or on any other ground, the liability of the Guarantor under this Guarantee shall be computed as if such moneys had never been paid to the Beneficiary at all.

15. All notices and demands arising out of or in connection with this Guarantee shall be sent by personal delivery, post, airmail post or courier to the address set out below (as may be changed in accordance with Clause 16):

(a) Upon the Beneficiary at [●] marked for the attention of [●];

(b) Upon the Guarantor at [●] marked for the attention of [●];

provided that any notice or demand sent by personal delivery, post, airmail post or courier will be deemed (in the absence of earlier receipt) to have been delivered 10 day after dispatch.

16. The Beneficiary and the Guarantor may change their respective nominated addressees for service of documents to another addressee, but only with prior written notice to the other party giving not less than 7 days' notice in advance to the other parties. All demands and notices must be in writing.

17. This Guarantee is not assignable by the Beneficiary without the prior written agreement of the Guarantor other than (a) by way of security to the Security Trustee (as defined in the Project Agreement) on behalf of the Senior Funders (as defined in the Project Agreement), (b) to a person to whom the benefit of the Interface Agreement has been assigned or novated.

18. This Guarantee shall be governed by Scots law, and the Guarantor hereby irrevocably submits to the exclusive jurisdiction of the Court of Session in Edinburgh, save where the sheriff courts have exclusive competence in which case it shall be referred to the Sheriffdom of Lothian and Borders at Edinburgh (except for the purpose of enforcement proceedings in respect of any decision, judgment or award of such court in another jurisdiction) and irrevocably appoints the Subsidiary to accept service of any proceedings issued out of the Courts in Scotland as aforesaid.

19. The parties agree that this Guarantee shall not be amended without the prior written consent of the parties.

20. When used in this Guarantee, the expression "Working Days" means days (other than Saturdays or Sundays) on which banks are open for domestic business in the City of London.

21. The Beneficiary agrees to return this Guarantee to the Guarantor within 30 days of the expiry of all its rights under this Guarantee and the discharge of the liabilities of the Guarantor under this Guarantee. This Guarantee shall become automatically null and void at that time, whether or not this Guarantee has been returned to the Guarantor.

IN WITNESS WHEREOF these presents typewritten on this and the preceding 5 pages are executed by the parties hereto as follows:

SIGNED for and on behalf of **[BOUYGUES ENERGIES & SERVICES S.A.S] [BROOKFIELD MULTIPLEX PTY Ltd]**

at

on 2015 as follows:

..... Director

Mr Jean-Philippe Trin..... Full Name

Print Full Name

before this witness

_____ _____

Print Full Name

Address

_____

_____

SIGNED for and on behalf of **[and [BOUYGUES ENERGIES & SERVICES FM (UK) LIMITED] [BROOKFIELD MULTIPLEX CONSTRUCTION EUROPE LIMITED]**

at

on 2015 as follows:

..... Director

..... Full Name

Print Full Name

before this witness

_____ _____

Print Full Name

Address

_____

_____

SCHEDULE PART 37

CONTINGENT FUNDING AGREEMENT

DATED _____

IHS LOTHIAN LIMITED

and

BROOKFIELD MULTIPLEX PTY LIMITED

CONTINGENT FUNDING AGREEMENT

Contents

Clause		Page No
RECITALS		520
OPERATIVE PROVISIONS		520
1.	DEFINITIONS AND INTERPRETATION	520
2.	COMMENCEMENT AND DURATION	521
3.	LOAN	521
4.	UNDERTAKINGS OF THE CONTINGENT FUNDING PROVIDER	522
5.	PAYMENTS	52
6.	BENEFIT OF AGREEMENT	525
7.	SUBORDINATION	525
8.	LAW	525

PARTIES

(1) **IHS LOTHIAN LIMITED** (Company Number SC493676) whose registered office is situated at 50 Lothian Road, Edinburgh, Scotland, EH3 9WJ ("**Project Co**"); and

(2) **BROOKFIELD MULTIPLEX PTY LIMITED** a company registered in Australia (Company Number ACN 147 631 472) whose registered office is situated at Level 22, 135 King Street, Sydney, Australia (the "**Contingent Funding Provider**").

RECITALS

(A) Project Co has entered into the Project Agreement with the Board.

(B) Project Co has appointed the Contractor to carry out certain of its obligations under the Project Agreement relating to the Works, and any other obligations expressed to be assumed by the Contractor in the building contract of even date hereto (the "**Subcontract**").

(C) The Contingent Funding Provider has agreed, in certain circumstances, to make Advances to Project Co on the terms and subject to the conditions set out in this Agreement.

OPERATIVE PROVISIONS

1. DEFINITIONS AND INTERPRETATION

1.1 Definitions

Unless otherwise defined in this Agreement, terms defined in the Subcontract shall have the same meaning when used in this Agreement. In addition, the following terms shall have the meanings set out below:"**Additional Payment**" has the meaning given in Clause 3.1;

"**Advance**" has the meaning given in Clause 3.1;

"**Discharge Date**" means the later of the Senior Discharge Date and the Senior Subordinated On-Loan Discharge Date;

"**Price Adjustment Funds**" means in relation to any Price Adjustment, funds received from a counterparty of Project Co under any Related Agreement or recovered under the insurances referred to in clause 53 of the Subcontract in respect of such Price Adjustment;

"**Project Agreement**" means an agreement in writing between the Board and Project Co dated on or around 5 February 2015;

"**Related Agreement**" means the Project Agreement and Parent Company Guarantee;

"**Senior Debt**" means all present and future moneys, debts and liabilities due, owing or incurred by Project Co to any senior creditor under or in connection with any Funding Agreement (in each case, whether alone or jointly, or jointly and severally, with any other person, whether actually or contingently, and whether as principal, surety or otherwise);

"**Senior Discharge Date**" means the date upon which all senior debt under the Funding Agreements has been fully and irrevocably paid or discharged and no further senior debt is or are capable of becoming outstanding;

"**Senior Finance Documents**" has the meaning given in the Project Agreement;

"**Senior Subordinated On-Loan Debt**" means all present and future moneys, debts and liabilities due, owing or incurred by Project Co to any senior subordinated on-loan lenders (in its capacity as senior subordinated on-loan lender only) under or in connection with any

Funding Agreement (in each case, whether alone or jointly, or jointly and severally, with any other person, whether actually or contingently, and whether as principal, surety or otherwise);

"**Senior Subordinated On-Loan Discharge Date**" means the date upon which all senior subordinated on-loan debt under the Funding Agreements has been fully and irrevocably paid or discharged and no further senior subordinated on-loan debt is or are capable of becoming outstanding;

"**Third Party**" has the meaning given in Clause 3.1.

1.2 Interpretation

1.2.1 This Agreement shall consist of the Recitals and the Clauses.

1.2.2 In the event of inconsistencies between the terms of this Agreement and the terms of the Subcontract, the terms of this Agreement shall prevail.

1.2.3 Any reference to a Clause shall mean a Clause of this Agreement, unless otherwise stated.

1.2.4 The Clause titles or headings appearing in this Agreement are for reference only and shall not affect its construction or interpretation.

1.2.5 Words importing persons shall include firms, companies and corporations and vice versa.

2. COMMENCEMENT AND DURATION

This Agreement shall become effective on the last date of signature of the parties and shall continue until all amounts repayable hereunder have been discharged in full.

3. LOAN

3.1 If at any time the Contractor becomes entitled to payment of a Price Adjustment in accordance with the Subcontract other than as a result of a Non PA Entitlement Obligation or on the occurrence of a Project Co Breach (an "Additional Payment"); and

3.1.1 for whatever reason any of the terms of Clause 75 (*Overriding Entitlements*) of the Subcontract are or are claimed to be ineffective, illegal, unenforceable, invalid, void or voidable in whole or part or are changed, amended or annulled pursuant to any order or decision of any adjudicator, court, tribunal or arbitration or by any provision of any statute or a liability of Project Co to the Contractor in respect of a Price Adjustment (other than a Non PA Entitlement Obligation or on the occurrence of a Project Co Breach) is determined prior to any determination of the liability of the Board to Project Co under the Project Agreement or the relevant insurer, as the case may be, (individually and together the "**Third Party**") in respect of that Price Adjustment; and

3.1.2 the Contractor demands payment of such Price Adjustment and Price Adjustment Funds are not available in respect of such Price Adjustment,

then at the same time as payment is made to the Contractor under the Subcontract the Contingent Funding Provider shall advance to Project Co under this Agreement a sum equal to the amount of such payment demanded ("**Advance**").

3.2 Any Advance made pursuant to Clause 3.1:

3.2.1 shall be unsecured;

3.2.2 shall, subject to Clause 1 below, not bear interest; and

3.2.3 if and to the extent Project Co receives from the Third Party monies in respect of the Additional Payment for which the Advance is required then to such extent (and only to such extent) the Advance shall be repaid, together with any interest recovered from the Third Party in connection with such monies within 20 Business Days of such receipt.

4. UNDERTAKINGS OF THE CONTINGENT FUNDING PROVIDER

4.1 In respect of any Advances outstanding (but which are not due for repayment pursuant to Clause 1) the Contingent Funding Provider shall not:

4.1.1 assign or purport to assign to any person the whole or any part of any such Advances;

4.1.2 purport to set off at any time any amount of such Advances against any amount payable by it to Project Co;

4.1.3 attempt to obtain repayment or prepayment of such Advance otherwise than in accordance with the terms of this Agreement;

4.1.4 ask, demand, accelerate, sue, claim or prove for, take or receive from Project Co in any manner whatsoever the whole or any part of such Advance other than in accordance with the terms of this Agreement; and

4.1.5 in respect of such Advance, petition for, or vote in favour of, any resolution or take any other action whatsoever for, or which may lead to the administration, winding- up or dissolution of Project Co or the termination of the Contractor's engagement under the Subcontract.

4.2 The Contingent Funding Provider acknowledges that a failure to make any Advance in accordance with this Agreement may cause Project Co to suffer or incur costs and/or losses. For the avoidance of doubt, such costs and/or losses shall be recoverable by Project Co in addition to the Advance demanded by Project Co from the Contingent Funding Provider (subject to the application of the usual principles of mitigation of loss at common law).

4.3 The Contingent Funding Provider hereby authorises the Contractor and Project Co to make any addition or variation to the Subcontract and the obligations of the Contingent Funding Provider under this Agreement shall in no way be affected by any addition to and/or variation of the Subcontract.

4.4 If at any time any provision of this Agreement is or becomes illegal, invalid or unenforceable, the legality, validity or enforceability of the remaining provisions of this Agreement shall not in any way be affected or impaired thereby.

5. PAYMENTS

5.1 On each date on which this Agreement requires an amount to be paid by any party, it shall make the same available to the other party by payment in sterling and in immediately available, freely transferable, cleared funds to such account of such other party as such other party shall from time to time have specified for this purpose.

5.2 All payments required to be made by either party hereunder shall be calculated without reference to any set-off or counterclaim and shall be made free and clear of and without any deduction for or on account of any set-off or counterclaim.

5.3 In the event of failure of either party to make any payment by the time required pursuant to this Agreement, that party shall pay interest upon the amount due at the Default Interest Rate plus 3% and indemnify the other party against any other losses arising from such late payment.

6. BENEFIT OF AGREEMENT

This Agreement shall be binding upon and enure to the benefit of each party hereto and its successors and assignees provided always that the parties shall not assign or transfer all or any of their rights, benefits and obligations hereunder without the prior written consent of the other provided always that Project Co may always assign its rights and benefits to the Funders (or their agent or trustee) and otherwise as permitted under Clause 57.4 of the Subcontract. Notwithstanding the foregoing the Contingent Funding Provider consents to and acknowledges that it has received notice of assignation by way of security to the Security Trustee (as defined in the Funders' Direct Agreement with the Contractor) of all or any of the rights, title, benefit and interest under this Agreement and the exercise by the Security Trustee of any rights or powers arising from such assignation.

7. SUBORDINATION

7.1 Until the Senior Discharge Date; if:

7.1.1 any resolution is passed or order made for the winding-up, liquidation, dissolution or administration of Project Co or the Contractor;

7.1.2 Project Co or the Contractor assigns its assets for the benefit of its creditors or enters into any arrangement with the creditors generally, or any arrangement whereby its affairs and/or assets are submitted to the control of or are protected from its creditors is ordered to be declared;

7.1.3 Project Co or the Contractor becomes subject to any insolvency, bankruptcy, reorganisation, receivership (whether relating to all or only some of its assets and whether or not resulting from the enforcement of any of the Senior Finance Documents), liquidate, dissolution or other proceedings whether voluntary or involuntary (and whether or not involving insolvency);

7.1.4 Project Co or the Contractor becomes subject to any mandatory distribution of its assets or has a receiver appointed with respect to any of its assets (whether or not resulting from the enforcement of the Funding Agreements); or

7.1.5 any analogous event to any of the foregoing occurs in any country or territory in which Project Co or the Contractor is incorporated or carried on any business;

the following provisions of this Clause 7 shall apply:

7.2 While any of the circumstances mentioned in Clause 7.1 is subsisting until the Senior Discharge Date, the indebtedness of Project Co to the Contingent Funding Provider pursuant to this Agreement will be subordinated in right of payment to the Senior Debt and the Senior Subordinated On-Loan Debt.

7.3 The Subordination provisions in this Agreement constitute subordination of sums due under this Agreement to the Senior Debt and the Senior Subordinated On-Loan Debt until the Discharge Date regardless of any intermediate payment or discharge of the Senior Debt and the Senior Subordinated On-Loan Debt in whole or in part.

8. LAW

8.1 This Agreement shall be governed by and construed in accordance with Scots law.

8.2 The parties submit to the exclusive jurisdiction of the Scottish Courts as regards any claim or matter arising in relation to this Agreement.

IN WITNESS whereof the presents typewritten on this and the preceding 5 pages are executed by the parties hereto as follows:

SIGNED for and on behalf of the said **IHS LOTHIAN LIMITED** acting under a power of attorney

at

on

by

Print Full Name	Attorney

before this witness

Print Full Name	Witness

Address

SIGNED for and on behalf of the said **BROOKFIELD MULTIPLEX PTY LIMITED**

at

on

by

Ashley Muldoon

Print Full Name	Director

Jon Haick

Print Full Name	Director

Multi Bed – Ventilation Amendment Proposal to Achieve Room Balance
WW-SZ-XX-DC-XXX-010

Proposed Solution to Rooms Identified as Being of Concern

Room Reference Location	Ventilation Layout Drawing Number	Room Number	Room Description	Proposed Solution	Severity of Works			Ductwork Fabricated
					Local	Medium	Major	Yes/No
A	WW-Z4-00-PL-524-001K	G-A2-054	Multi Bed (4) Room Occupancy 10 People	Retain the supply ventilation at 4ac/hr and the en-suite ventilation at 10ac/hr. Ducts servicing en-suite & toilets to be retained at their original sizes. Introduce new general extract ductwork and grille into the room to provide 4ac/hr overall. This will achieve a balanced room pressure. Branch ducts to be connected locally into the existing general extract ductwork main. Supply & Extract Duty 174l/s. (Equates to 17 people).		✓		Yes
B	WW-Z4-00-PL-524-001K	G-A2-046	Multi Bed (4) Room Occupancy 10 People	Retain the supply ventilation at 4ac/hr and the en-suite ventilation at 10ac/hr. Ducts servicing en-suite & toilets to be retained at their original sizes. Introduce new general extract ductwork and grille into the room to provide 4ac/hr overall. This will achieve a balanced room pressure. Branch ducts to be connected locally into the existing general extract ductwork main. Supply & Extract Duty 174l/s. (Equates to 17 people).		✓		Yes
C	WW-Z4-00-PL-524-002L	G-A2-028	Multi Bed (4) Room Occupancy 10 People	Retain the supply ventilation at 4ac/hr and the en-suite ventilation at 10ac/hr. Ducts servicing en-suite & toilets to be retained at their original sizes. Introduce new general extract ductwork and grille into the room to provide 4ac/hr overall. This will achieve a balanced room pressure. Branch ducts to be connected locally into the existing general extract ductwork main. The main itself will be increased in size over a defined length. Supply & Extract Duty 174l/s. (Equates to 17 people).		✓		Yes
D	WW-Z4-01-PL-524-001J	1-B1-063	Multi Bed (4) Room Occupancy 15 People	Retain the supply ventilation at 4ac/hr. Introduce new general extract ductwork and grille into the room to provide 4ac/hr overall. The existing general extract ductwork currently serving the room has been increased in size and another grille added to it to serve the room. This will achieve a balanced room pressure. New branch duct to be connected locally into the existing general extract ductwork main. Supply & Extract Duty 312l/s. (Equates to 31 people).		✓		Yes
E	WW-Z4-01-PL-524-001J	1-B1-031	Multi Bed (4) Room Occupancy 15 People	Retain the supply ventilation at 4ac/hr. Introduce new general extract ductwork and grille into the room to provide 4ac/hr overall. The existing general extract ductwork currently serving the room has been increased in size and another grille added to it to serve the room. This will achieve a balanced room pressure. New branch duct to be connected locally into the existing general extract ductwork main. Supply & Extract Duty 332l/s. (Equates to 33 people).		✓		Yes
F	WW-Z4-01-PL-524-001J	1-B1-009	Multi Bed (4) Room Occupancy 15 People	Retain the supply ventilation at 4ac/hr. Introduce new general extract ductwork and grille into the room to provide 4ac/hr overall. The existing general extract ductwork currently serving the room has been increased in size and another grille added to it to serve the room. This will achieve a balanced room pressure. New branch duct to be connected locally into the existing general extract ductwork main. The main itself will be increased in size over a defined length. Supply & Extract Duty 348l/s. (Equates to 34 people).		✓		Yes

Issue	Date	By	Checked
1	08.02.17	BR	SMcK
2	14.02.17	BR	SMcK
3	22.02.17	BR	SMcK
4	11.05.17	BR	SMcK
5	23.05.17	BR	SMcK
6	14.06.18	BR	SMcK
7	06.08.18	BR	SMcK

Multi Bed – Ventilation Amendment Proposal to Achieve Room Balance
WW-SZ-XX-DC-XXX-010

Room Reference Location	Ventilation Layout Drawing Number	Room Number	Room Description	Proposed Solution	Severity of Works			Ductwork Fabricated
					Local	Medium	Major	Yes/No
G	WW-Z3-03-PL-524-001G	3-C1.3-011	Multi Bed (4) Room Occupancy 14 People	Retain the supply ventilation at 4ac/hr and the en-suite and shared wet room ventilation at 10ac/hr. Introduce new general extract ductwork and grille into the room to provide 4ac/hr overall. This will achieve a balanced room pressure. Branch ducts to be connected locally into the existing general extract ductwork main. The main itself will be increased in size over a defined length. Supply & Extract Duty 176l/s. (Equates to 17 people).		✓		Yes
H	WW-Z3-03-PL-524-001G	3-C1.3-013	Multi Bed (4) Room Occupancy 14 People	Retain the supply ventilation at 4ac/hr and the en-suite and the shared wet room ventilation at 10ac/hr. Introduce new general extract ductwork and grille into the room to provide 4ac/hr overall. This will achieve a balanced room pressure. Branch ducts to be connected locally into the existing general extract ductwork main. The main itself will be increased in size over a defined length. Supply & Extract Duty 174l/s. (Equates to 17 people).		✓		Yes
I	WW-Z4-03-PL-524-001G	3-C1.2-026	Multi Bed (4) Room Occupancy 14 People	Retain the supply ventilation at 4ac/hr. Bay 1 toilets, ventilation is 10ac/hr and shared en-suite ventilation is 17ac/hr. Introduce a new general extract and dirty extract ductwork and grilles into the respective rooms to provide 4ac/hr overall. This will achieve a balanced room pressure. Branch ducts to be connected locally into the existing general and dirty extract ductwork mains. Door grilles will be provided within the shared en-suite, shared en-suite ventilation will be 17ac/hr. Supply & Extract Duty 176l/s. (Equates to 17 people).		✓		Yes
J	WW-Z4-03-PL-524-001G	3-C1.2-023	Multi Bed (4) Room Occupancy 14 People	Retain the supply ventilation at 4ac/hr. Bay 1 toilets, ventilation is 10ac/rd and shared en-suite ventilation is 17ac/hr. Introduce a new general extract and dirty extract ductwork and grilles into the respective rooms to provide 4ac/hr overall. This will achieve a balanced room pressure. Branch ducts to be connected locally into the existing general and dirty extract ductwork mains. Door grilles will be provided within the shared en-suite, shared en-suite ventilation will be 17ac/hr. Supply & Extract Duty 176l/s. (Equates to 17 people).		✓		Yes
K	WW-Z4-03-PL-524-002G	3-C1.1-018	Multi Bed (4) Room Occupancy 15 People	Retain the supply ventilation at 4ac/hr and the en-suite ventilation at 17ac/hr. Ducts serving the en-suites and toilets to be increased in size. Introduce new general extract ductwork and grille into the room to provide 4ac/hr overall. This will achieve a balanced room pressure. Branch duct to be connected locally into the existing general extract ductwork main. Door grilles will be provided within the en-suite and toilets. Supply & Extract Duty 184l/s. (Equates to 18 people).		✓		Yes
L	WW-Z4-03-PL-524-002G	3-C1.1-046	Multi Bed (4) Room Occupancy 15 People	Retain the supply ventilation at 4ac/hr and the en-suite ventilation at 17ac/hr. Ducts serving the en-suites and toilets to be increased in size. Introduce new general extract ductwork and grille into the room to provide 4ac/hr overall. This will achieve a balanced room pressure. Branch duct to be connected locally into the existing general extract ductwork main. Door grilles will be provided within the en-suite and toilets. Supply & Extract Duty 186l/s. (Equates to 18 people).		✓		Yes

Issue	Date	By	Checked
1	08.02.17	BR	SMcK
2	14.02.17	BR	SMcK
3	22.02.17	BR	SMcK
4	11.05.17	BR	SMcK
5	23.05.17	BR	SMcK
6	14.06.18	BR	SMcK
7	06.06.19	BR	SMcK

Multi Bed – Ventilation Amendment Proposal to Achieve Room Balance
WW-SZ-XX-DC-XXX-010

Room Reference Location	Ventilation Layout Drawing Number	Room Number	Room Description	Proposed Solution	Severity of Works			Ductwork Fabricated
					Local	Medium	Major	Yes/No
M	WW-Z4-01-PL-524-001J	1-B1-065	Multi Cot (3) Room Occupancy 9 People	Retain the supply ventilation at 4ac/hr. Introduce new general extract ductwork and grilles into the room to provide 4ac/hr. Branch duct to be connected locally into the existing general extract ductwork. The existing general extract ductwork currently serving this area has been increased in size. This will achieve a balanced room pressure. Supply & Extract Duty 144l/s. (Equates to 14 people).		✓		Yes
N	WW-Z4-01-PL-524-002F	1-L1-100	Multi Bed (4)	No change to the existing room ventilation provision and ductwork design, room is currently positive to corridor.	N/A	N/A	N/A	N/A
O	WW-Z4-01-PL-524-002F	1-L1-097	Multi Bed (4)	No change to the existing room ventilation provision and ductwork design, room is currently positive to corridor.	N/A	N/A	N/A	N/A
P	WW-Z4-03-PL-524-001F	3-C1.8-027	Multi Bed (4)	No change to the existing room ventilation provision and ductwork design, room is currently positive to corridor.	N/A	N/A	N/A	N/A
Q	WW-Z4-03-PL-524-001F	3-C1.8-016	Multi Bed (4)	No change to the existing room ventilation provision and ductwork design, room is currently positive to corridor.	N/A	N/A	N/A	N/A
R	WW-Z3-03-PL-524-002G	3-C1.4-084	Multi Bed (4)	No change to the existing room ventilation provision and ductwork design, room is currently positive to corridor.	N/A	N/A	N/A	N/A
S	WW-Z3-03-PL-524-002G	3-C1.4-061	Multi Bed (6)	No change to the existing room ventilation provision and ductwork design, room is currently positive to corridor.	N/A	N/A	N/A	N/A
T	WW-Z4-03-PL-524-002G	3-D9-022	Multi Bed (3) Room Occupancy 11 People	Retain the supply ventilation at 4ac/hr and the en-suite ventilation at 10ac/hr. Introduce new general extract ductwork and grilles into the room to provide 4ac/hr overall. This will achieve a balanced room pressure. Branch ducts to be connected locally into the existing general extract ductwork mains. One of the mains itself will be increased in size over a defined length. Supply & Extract Duty 122l/s. (Equates to 12 people)		✓		Yes

Notes :-

1) Room occupancy is taken from the Clinical Output Based Specifications.
2) Bedroom ventilation is based on a fresh air rate allowance of 10l/s per person in line with SHTM 03-01.

Issue	Date	By	Checked
1	08.02.17	BR	SMcK
2	14.02.17	BR	SMcK
3	22.02.17	BR	SMcK
4	11.05.17	BR	SMcK
5	23.05.17	BR	SMcK
6	14.05.18	BR	SMcK
7	06.06.18	BR	SMcK

RDD	
Reviewable Design Data : Section 5 of Schedule Part 6	
	Bo[illegible]
Name	J. MACKENZIE
Date	26/7/18
Sign	[redacted]
Level	A
Comment:	

In accordance with the Levels as set out in Clause 4 Effect of Review and Schedule Part 8 (Review Procedure);

Level A : No Comment
Level B : Proceed subject to Amendment as noted
Level C : Subject to amendment as noted
Level D : Rejected

Brookfield MULTIPLEX | BM
Built to outperform.

Contractor Document Review
RMSC & DCN Edinburgh

A ☑ No Comment
B ☐ Noted subject to comments revise and resubmit within 7 business days
C ☐ Rejected - revise and resubmit within 7 business days

GM Checked [redacted]
Date 27/7/18

Brookfield Multiplex review status does not absolve the consultant of its obligations with regard to contractor and conformity with the other Consultants and specialist Subcontractors design and the project Agreements, Employer's Requirements and the cost plan and for ensuring that there are no ambiguities, discrepancies, inconsistencies or omissions within the document or between it and any other design document.

From: Henderson, Ronnie
Sent: 11 January 2019 14:18
To: Inverarity, Donald; Sutherland, SarahJane; Sansbury, Jackie
Subject: RE: 20190109151315918.pdf

All,

MPX will by handover have carried out all the tests and validation required in the SHTM and will record that they have done so on the master sheet Jackie attached. These results and any commentary will be available as part of the O & M manual, this is in line with all projects carried out in NHSL. This will not be in the form of a specific report. Should we wish to have the validation done independently this can be arranged after handover at a cost to NHSL, however it is worth noting that the company NHSL usually employs to do validation checks of this type is the company carrying out the commissioning on behalf of Multiplex.

Happy to meet and discuss so that we can be reassured what is being done meets our needs.

Regards

Ronnie

Ronnie Henderson
Commissioning Manager Hard FM
RHSC & DCN - Little France
NHS Lothian

RHSC & DCN Site Office
Little France Crescent
Edinburgh
EH16 4TJ

[redacted]

From: Inverarity, Donald
Sent: 11 January 2019 11:50
To: Sutherland, SarahJane; Sansbury, Jackie
Cc: Henderson, Ronnie
Subject: RE: 20190109151315918.pdf

Thanks Sarah,
Yes I agree, Jackie the validation report should demonstrate that all aspects of SHTM 03-01 have been addressed. This is a much wider exercise than only addressing infection control issues or air testing. The company that performs the validation is expected by SHTM 03-01 (and us) to produce an easy to read succinct report that outlines which aspects have passed or failed, what snagging issues have been identified and how they have been corrected.
There is a recent example of such a report from the commissioning of the new theatres at SJH a couple of years ago.
All the best
Donald

From: Sutherland, SarahJane
Sent: 11 January 2019 11:42
To: Sansbury, Jackie; Inverarity, Donald

Cc: Henderson, Ronnie
Subject: 20190109151315918.pdf

Good Morning Jackie,

I have had a look at which guidance relates to Ventilation and note that there is specific guidance within SHTM 03-01 'Ventilation within Healthcare premises' Part A – Design and Validation which outlines the validation and commissioning process (section 8) – I have attached a copy.

The contractor/project team should therefore refer to this document to ensure that all the requirements have been met as outlined in the guidance. The section also includes detail in relation to air sampling.

Kind regards
Sarah

Sarah Jane Sutherland
Lead HAI Scribe Advisor
Infection Prevention and Control Team
NHS Lothian
[redacted]
[redacted]

From: Sansbury, Jackie
Sent: 09 January 2019 16:02
To: Inverarity, Donald; Sutherland, SarahJane
Cc: Henderson, Ronnie
Subject:

Dear both, re theatre validation.
Please see attached the sheet Multiplex intends to complete fro the theatres.
Does this cover all you need?
Jackie

From: Inverarity, Donald
Sent: 10 May 2019 15:51
To: Laurenson, Ian; Johannessen, Ingolfur; Cameron, Fiona; Guthrie, Lindsay; Sutherland, SarahJane; Kalima, Pota; Khatamzas, Elham
Subject: FW: Theatre Validation

Importance: High
Sensitivity: Confidential

For information. I'm keen that you aware of this as I don't think I solely represent NHS Lothian with regards to the potential "risk" associated with this situation.
Thanks
Donald

From: Inverarity, Donald
Sent: 10 May 2019 15:47
To: Henderson, Ronnie
Cc: Currie, Brian; Curley, George; McMahon, Alex
Subject: RE: Theatre Validation

Hi Ronnie,

The Multiplex document doesn't indicate what size the theatres are, what the air pressures are in the theatre areas (anaesthetic room, prep area, theatre etc) or what number of air changes per hour are achieved and neither does it mention what, if any, microbiological assessment of air quality has been performed (that box is blank so I'm presuming none has been performed). Although you are being assured that it "conforms" it isn't explicitly stated what standard it "conforms" to –presumably SHTM 03-01 ?
The statement:
"The theatre suite ventilation system has been commissioned and validated in accordance with the required regulations and has achieved the required standard."
might be factually correct but there is nothing to back it up and it tells us absolutely nothing about how the theatre performs at baseline. It is essentially asking us to taking everything on trust that its all okay. That makes me a little uncomfortable in the current political climate of scrutiny. Does it achieve the required standard with a wide safety margin or did it barely achieve it empty without any operations in progress?
At validation the report should tell us at baseline how it actually "performs" so that if there are problems in the future we have some baseline parameters of air pressures and air changes per hour to compare it against.
I see that "all test documentation is located on Zutec." I don't know what Zutec is or whether anyone in NHS Lothian has access to that information so essentially I can't provide any assurance to myself or NHS Lothian by assessing it myself. But in my role as infection control doctor I shouldn't need to go to source documents and extract that information to interrogate and interpret it myself, it should be clearly and explicitly included in the validation report.

Section 8.64 of SHTM 03-01 says:
Ventilation system commissioning/validation report
8.64 Following commissioning and/or validation a full report detailing the findings should be produced. The system will only be acceptable to the client if at the time of validation it is considered fit for purpose and will only require routine maintenance in order to remain so for its projected life.

Personally I don't think we are being provided with a "full report" detailing the validation findings and there is not enough detail for me to know if the theatre is," fit for purpose and will only require routine maintenance in order to remain so for its projected life." I don't think the Validation checklist provided fulfils point 8.64 of SHTM 03-01

whereas the validation reports we were issued when the SJH theatres were commissioned did and were very easy to read and be assured by.

I'm happy to be over-ruled but, for me, I'm not assured by this checklist that theatre 30 is fit for purpose because the information I would be looking for to allow me to have that assurance is not provided and not accessible by me. I'm happy to hear other views.
Thanks.
All the best.
Donald

From: Henderson, Ronnie
Sent: 10 May 2019 14:49
To: Inverarity, Donald
Cc: Currie, Brian; Curley, George
Subject: Theatre Validation

Hi Donald,

Multiplex have provided us with their validation report for Theatre 30 as an example of what they intend to provide for each individual theatre. You will note it differs from the example you sent from St Johns although there is a declaration that it conforms. I can confirm that these have been reviewed and signed off by the independent tester which provides us with reassurance of compliance. If however you have any doubts or concerns, happy to discuss with a view to appointing someone from outwith the project to give an additional layer of assurance if required.

Regards

Ronnie

Ronnie Henderson
Commissioning Manager Hard FM
RHSC & DCN - Little France
NHS Lothian

RHSC & DCN Site Office
Little France Crescent
Edinburgh
EH16 4TJ

[redacted]

From: [redacted]
Sent: 13 May 2019 08:46
To: Gillies, Tracey
Subject: RE: Theatre Validation

Thank you Tracey

From: Gillies, Tracey
Sent: 11 May 2019 13:40
To: Inverarity, Donald; Curley, George; Henderson, Ronnie; Currie, Brian
Cc: [redacted]
Subject: RE: Theatre Validation

Answering for Alex as he is on leave
I think all your points are valid Donald, and it should not be difficult to close the gap between what has been presented and the standard it is being measured against if this is all presentational.
Surely it just needs a list of what we need to know to be completed.
It may well be that the IT had access to a document management system that allowed them to see the evidence but you are right, in the current climate and potentially in future, saying signed off by IT will not be sufficient
Tracey

Executive Medical Director
NHS Lothian
Waverley Gate
[redacted]

From: [redacted] **On Behalf Of** McMahon, Alex
Sent: 10 May 2019 15:51
To: Gillies, Tracey
Subject: FW: Theatre Validation

Hi Tracey

Copying to you in Alex absence – Can you help with this please?

Thanks
Kal

[redacted]
Executive Director, Nursing, Midwifery and AHPs
Executive Lead for REAS and Prison Healthcare
NHS Lothian|2 - 4 Waterloo Place|Edinburgh|EH1 3EG|Tel:[redacted]

From: Inverarity, Donald [redacted]
Sent: 10 May 2019 15:47
To: Henderson, Ronnie [redacted]
Cc: Currie, Brian [redacted]; Curley, George [redacted]

McMahon, Alex <[redacted]
Subject: RE: Theatre Validation

Hi Ronnie,

The Multiplex document doesn't indicate what size the theatres are, what the air pressures are in the theatre areas (anaesthetic room, prep area, theatre etc) or what number of air changes per hour are achieved and neither does it mention what, if any, microbiological assessment of air quality has been performed (that box is blank so I'm presuming none has been performed). Although you are being assured that it "conforms" it isn't explicitly stated what standard it "conforms" to –presumably SHTM 03-01 ?
The statement:
"The theatre suite ventilation system has been commissioned and validated in accordance with the required regulations and has achieved the required standard."
might be factually correct but there is nothing to back it up and it tells us absolutely nothing about how the theatre performs at baseline. It is essentially asking us to taking everything on trust that its all okay. That makes me a little uncomfortable in the current political climate of scrutiny. Does it achieve the required standard with a wide safety margin or did it barely achieve it empty without any operations in progress?
At validation the report should tell us at baseline how it actually "performs" so that if there are problems in the future we have some baseline parameters of air pressures and air changes per hour to compare it against.
I see that "all test documentation is located on Zutec." I don't know what Zutec is or whether anyone in NHS Lothian has access to that information so essentially I can't provide any assurance to myself or NHS Lothian by assessing it myself. But in my role as infection control doctor I shouldn't need to go to source documents and extract that information to interrogate and interpret it myself, it should be clearly and explicitly included in the validation report.

Section 8.64 of SHTM 03-01 says:
Ventilation system commissioning/validation report
8.64 Following commissioning and/or validation a full report detailing the findings should be produced. The system will only be acceptable to the client if at the time of validation it is considered fit for purpose and will only require routine maintenance in order to remain so for its projected life.

Personally I don't think we are being provided with a "full report" detailing the validation findings and there is not enough detail for me to know if the theatre is," fit for purpose and will only require routine maintenance in order to remain so for its projected life." I don't think the Validation checklist provided fulfils point 8.64 of SHTM 03-01 whereas the validation reports we were issued when the SJH theatres were commissioned did and were very easy to read and be assured by.

I'm happy to be over-ruled but, for me, I'm not assured by this checklist that theatre 30 is fit for purpose because the information I would be looking for to allow me to have that assurance is not provided and not accessible by me. I'm happy to hear other views.
Thanks.
All the best.
Donald

From: Henderson, Ronnie
Sent: 10 May 2019 14:49
To: Inverarity, Donald
Cc: Currie, Brian; Curley, George
Subject: Theatre Validation

Hi Donald,

Multiplex have provided us with their validation report for Theatre 30 as an example of what they intend to provide for each individual theatre. You will note it differs from the example you sent from St Johns although there is a

declaration that it conforms. I can confirm that these have been reviewed and signed off by the independent tester which provides us with reassurance of compliance. If however you have any doubts or concerns, happy to discuss with a view to appointing someone from outwith the project to give an additional layer of assurance if required.

Regards

Ronnie

Ronnie Henderson
Commissioning Manager Hard FM
RHSC & DCN - Little France
NHS Lothian

RHSC & DCN Site Office
Little France Crescent
Edinburgh
EH16 4TJ

[redacted]

From: John Rayner <J[redacted]
Sent: 20 May 2019 09:29
To: Jamie Minhinnick
Cc: Currie, Brian; Henderson, Ronnie; Douglas, Brian; Paul Clinton; Leigh Kowalski; Dianne Halsey
Subject: RE: Validation

Dear Jamie,

I'm afraid that my diary is almost completely full for the next 9 weeks and so I cannot make this last minute commitment for next week.

Best wishes,

John

Eur Ing John M Rayner, BSc (Eng), CEng, FIHEEM, FCMI, MIMechE, MEI, MIET, MSVHSoc, TechIOSH
Authorising Engineer

TURNER TEAMQ

Click here to see all the services we offer

[redacted]
Telephone: [redacted]

Turner Professional Engineering Services, Collier House, Mead Lane, Hertford, Hertfordshire, SG13 7AX | Registration Number: 2642291

Please view our justgiving page https://www.justgiving.com/TeamQ2017 for an overview of what we are doing for our chosen charity of the year – Isabel Hospice.

This e-mail, together with any attachments, is for the exclusive and confidential use of the addressee (s). Any other distribution, use or reproduction without the sender's prior consent is unauthorised and strictly prohibited. If you have received this message in error, please notify the sender by e-mail immediately and delete the message from your computer without making any copies.

From: Jamie Minhinnick
Sent: 20 May 2019 07:51
To: Henderson, Ronnie
Cc: Currie, Brian; Douglas, Brian; John Rayner; Paul Clinton; Leigh Kowalski; Dianne Halsey
Subject: RE: Validation

Dear Ronnie,

Many thanks for your email.

I'm afraid I am not available on the 24/5 to witness the isolation rooms. I will speak to my colleagues to see if someone is available.

We do not offer an airflow measurement survey for independent validation. This should be arranged through your verification/validation contractor who will produce a report on the system which I/we can witness and cross reference against the design criteria.

It is very important at this stage that all commissioning data is made available to your independent validation engineers. All critical systems (as detailed in section 4 of SHTM 03/01 Pt B) should be validated as fit for purpose and to set verification criteria moving forward not just theatres. You should also pass any agreed derogations with regards to ventilation systems to the engineers. Without this, they will be measured against the SHTM03/01 criteria and not the design (which can often be very different).

Regards

Jamie

Jamie Minhinnick IEng MInstRE, CMgr MCMI, GCGI, MIHEEM
Authorising Engineer

TEAMQ TURNER

Click here to see all the services we offer

[redacted] [redacted]

Website: www.teamq.co.uk

Team Q Maintenance Limited, Collier House, Mead Lane, Hertford, Hertfordshire, SG13 7AX | Registration Number: 2642291

Please view our justgiving page https://www.justgiving.co.uk/TeamQ2017 for an overview of what we are doing for our chosen charity of the year – Isabel Hospice.

This e-mail, together with any attachments, is for the exclusive and confidential use of the addressee (s). Any other distribution, use or reproduction without the sender's prior consent is unauthorised and strictly prohibited. If you have received this message in error, please notify the sender by e-mail immediately and delete the message from your computer without making any copies.

From: Henderson, Ronnie[redacted]
Sent: 17 May 2019 15:57
To: Jamie Minhinnick
Cc: Currie, Brian
Subject: Validation
Importance: High

Hi Jamie,

Hope all is well with you. We are closing in on the final move date for the new RHCYP & DCN hospital in Edinburgh and the contractor is about to redo validation and commissioning of some ventilation systems. Can I ask the following:

1. Would you be able to come to site on 24/5 to jointly witness the re-validation of Isolation suites, if so I will confirm time and arrangements on Monday after a meeting with the construction commissioning manager.
2. Similarly our Infection Control Team are keen that that the theatres are independently validated and a report produced declaring fitness for purpose, is this a service you can provide/arrange

Regards

Ronnie

Ronnie Henderson
Commissioning Manager Hard FM
RHSC & DCN - Little France

NHS Lothian

RHSC & DCN Site Office
Little France Crescent
Edinburgh
EH16 4TJ

[redacted]

****

The information contained in this message may be confidential or legally privileged and is intended for the addressee only. If you have received this message in error or there are any problems please notify the originator immediately. The unauthorised use, disclosure, copying or alteration of this message is strictly forbidden.

****

From: Henderson, Ronnie
Sent: 31 May 2019 11:19
To: 'Alison Parton'
Cc: Hull, Ashley; Currie, Brian; Greer, Graeme
Subject: RE: Independent Validation

Hi Alison,

Regarding drawings do you just need layout/general location drawings (easy to get) or do you need ventilation detail (more difficult). I assume you will also need design information, can you confirm exactly what you will need please.

Regards

Ronnie

Ronnie Henderson
Commissioning Manager Hard FM
RHSC & DCN - Little France
NHS Lothian

RHSC & DCN Site Office
Little France Crescent
Edinburgh
EH16 4TJ

[redacted]

From: Alison Parton [redacted]
Sent: 31 May 2019 10:25
To: Henderson, Ronnie
Cc: Hull, Ashley; Currie, Brian; Greer, Graeme
Subject: RE: Independent Validation

Good Morning Ronnie

I have passed this onto my colleague and I will be back in touch shortly.

Kind Regards,
Alison

From: Henderson, Ronnie [redacted]
Sent: 30 May 2019 16:54
To: Alison Parton <[redacted]
Cc: Hull, Ashley [redacted] Currie, Brian [redacted] k>; Greer, Graeme [redacted]
Subject: Independent Validation
Importance: High

Hi Alison,

Good to talk to you earlier.

As discussed we are looking for independent validation to SHTM 03-01 of 10 theatres (7 of which are UCV but can also be used as conventional), 19 isolation rooms, 1 angiography procedures room, 1 intra-operative MRI, and ITU/HDU/NNU. There are also 3 standard MRI's, & 2 CT's, which are non interventional, if these are required under 03-01.

Due to the large volume I will forward all relevant drawings tomorrow and look to set up an introduction and planning meeting for early next week with a view to carrying the validation out week beginning 17/6.

If you could liaise with your Edinburgh office and confirm availability for that week as well as indicative time and cost I will raise the order.

Thanks and best regards

Ronnie

Ronnie Henderson
Commissioning Manager Hard FM
RHSC & DCN - Little France
NHS Lothian

RHSC & DCN Site Office
Little France Crescent
Edinburgh
EH16 4TJ

[redacted]

****

The information contained in this message may be confidential or

legally privileged and is intended for the addressee only. If you

have received this message in error or there are any problems

please notify the originator immediately. The unauthorised use,

disclosure, copying or alteration of this message is

strictly forbidden.

****

Alison Parton
Accounts Manager

IOM Consulting Limited

Brookside Business Park
Cold Meece
Stafford
ST15 0RZ

[redacted]

Web: http://www.iom-world.org
Web: http://www.safenano.org

Twitter: @IOMworld @IOMservice @SAFENANO_Online

The Institute of Occupational Medicine (IOM) is a company limited by guarantee, registered in Scotland (No.SC123972) and a Registered Scottish Charity (No.SC000365). IOM Consulting Ltd is a wholly owned subsidiary of IOM and a private limited company registered in Scotland (No. SC205670). Registered Office: Research Avenue North, Riccarton, Edinburgh, EH14 4AP, Tel [redacted].

This email and any files transmitted with it are confidential and intended solely for the use of the individual or entity to whom they are addressed. If you have received this email in error please notify the sender - [redacted] - immediately and delete the message from your system. All IOM email is virus scanned but the recipient should also check this email and any attachments for the presence of viruses.

To view our terms and conditions, please click here

As part of our drive to reduce environmental impact – please do not print if not necessary

From: Currie, Brian
Sent: 21 June 2019 12:50
To: 'Greer, Graeme'
Cc: Macrae, Colin; Henderson, Ronnie; Mackenzie, Janice
Subject: RE: RHCYP + DCN - Little France - AHU's - URGENT

Importance: High

Many thanks Graeme.

Regardless of any response from IHSL today we should meet with IOM on Monday morning and seek clarity on their view on all of this.

Could you / Colin set something up with them say at 10.30am?

We will have finished our weekly look ahead meeting with IHSL by then.

Regards

Brian

Brian Currie
Project Director - NHS Lothian
RHCYP + DCN Site Office
Little France Crescent
Edinburgh
EH16 4TJ

[redacted]

PROUD HISTORIES | NEW CHAPTERS

From: Greer, Graeme [redacted]
Sent: 21 June 2019 12:22
To: Currie, Brian
Cc: Macrae, Colin; Henderson, Ronnie; Mackenzie, Janice
Subject: RE: RHCYP + DCN - Little France - AHU's - URGENT

Brian,

Further to our call this morning, a few thoughts below on your questions.

As I mentioned this morning, based on current feedback from IOM, we anticipate they will report the system as non-compliant against the SHTM 03-01.

With respect to the fire / smoke issue, and in terms of “unsafe” we would think it likely that IOM would conclude that if the equipment / wiring is combustible, this would not be considered safe for occupation, and therefore we should clarify this with Project Co.

With respect to the static / dust accumulation issue, IOM may take the view that this will manifest itself almost immediately, and therefore any “in use” remediation would have to be undertaken immediately. Project Co may consider temporary measures that could reduce the static / dust accumulation issue.

IOM may advise in their reporting a combination of temporary rectification, permanent future remedials, or works needed before occupation. It would be useful to understand how IOM propose to structure their validation report.

Assuming IOM report as non-compliant against the SHTM, suggest the Board would need to undertake a risk assessment against any immediate remedials proposed by Project Co to determine whether patients could be moved in. We would obviously be happy to assist in the risk assessment / review proposed mitigation measures as needed.

Kind Regards
Graeme

Graeme Greer
Associate

[redacted]

MOTT MACDONALD

Mott MacDonald
St Vincent Plaza
319 St Vincent Street
Glasgow G2 5LD
United Kingdom

Website | **Twitter** | **LinkedIn** | **Facebook** | **Instagram** | **YouTube**

Mott MacDonald Limited. Registered in England and Wales no. 1243967. Registered office: Mott MacDonald House, 8-10 Sydenham Road, Croydon CR0 2EE, United Kingdom

The information contained in this e-mail is intended only for the person or entity to which it is addressed and may contain confidential and/or privileged material. If you are not the intended recipient of this e-mail, the use of this information or any disclosure, copying or distribution is prohibited and may be unlawful. If you received this in error, please contact the sender and delete the material from any computer.

From: Currie, Brian
Sent: 21 June 2019 08:35
To: Greer, Graeme
Cc: Macrae, Colin ; Henderson, Ronnie ; Mackenzie, Janice
Subject: RHCYP + DCN - Little France - AHU's - URGENT
Importance: High

Have passed on to IHSL / MPX who are reviewing urgently and a meeting/call to be held this morning I hope once they have digested.

Couple of immediate questions come to mind:

1 Take it we can occupy and use facilities as is or will IOM report system unsafe?

2 Assuming remedials agreed, can the works be done whilst facilities occupied? Presumably there is a PPM protocol for AHU's which allow just such as thing?

Regards

Brian

Brian Currie
Project Director - NHS Lothian
RHCYP + DCN Site Office
Little France Crescent
Edinburgh
EH16 4TJ

[redacted]

PROUD HISTORIES | NEW CHAPTERS

From: Greer, Graeme [redacted]
Sent: 20 June 2019 16:11
To: Mackenzie, Janice; Currie, Brian; Henderson, Ronnie; Macrae, Colin; Bain, Kelly J; Hull, Ashley
Subject: RE: Independent validatiion

Brian,

Further to our call, IOM have commented that all the AHUs are non-compliant with the SHTMs due to the wiring connections within each section of each AHU, by reference to the following clause of the SHTM 03-01;

General
1.41 The equipment built into the ventilation system and its ductwork should be of a type that will neither cause nor sustain combustion. No materials that could sustain biological activity should be used in the construction or assembly of the system.

IOMs main concerns relate to fire / smoke risk, and infection control both in the control panel enclosure and main airflow chambers. I have attached photos that indicate the potential issue.

It appears the control panel and associated wiring is located in a separate compartment of the AHU (and not part of the main airflow), however I think the IOM issue is the grommets / seals have air passing through them, hence still fire / smoke / infection control concerns.

In terms of the main chambers, I think they are also concerned about the amount of equipment / wiring in the main airflow, this appears to be associated with sensors / wiring / cable tray.

Think IOM would be interested in extent of materials that could cause or sustain combustion, and also could create static and cause dust / infection control issues.

Kind Regards

Graeme

Graeme Greer
Associate

[redacted]

Mott MacDonald
St Vincent Plaza
319 St Vincent Street
Glasgow G2 5LD
United Kingdom

Website | Twitter | LinkedIn | Facebook | Instagram | YouTube

Mott MacDonald Limited. Registered in England and Wales no. 1243967. Registered office: Mott MacDonald House, 8-10 Sydenham Road, Croydon CR0 2EE, United Kingdom

The information contained in this e-mail is intended only for the person or entity to which it is addressed and may contain confidential and/or privileged material. If you are not the intended recipient of this e-mail, the use of this information or any disclosure, copying or distribution is prohibited and may be unlawful. If you received this in error, please contact the sender and delete the material from any computer.

From: Greer, Graeme
Sent: 20 June 2019 12:22
To: 'Mackenzie, Janice' [redacted]>; 'Currie, Brian' [redacted]; 'Henderson, Ronnie' [redacted] Macrae, Colin [redacted]>; Bain, Kelly J [redacted]; 'Hull, Ashley' [redacted]
Subject: RE: Independent validatiion

Brian / Janice,

Just as an update to the email below.

The IOM issue is fire / smoke related as opposed to infection control, and concerns the first part of the SHTM sentence - 1.41 The equipment built into the ventilation system and its ductwork should be of a type that will neither cause nor sustain combustion.

Photos attached FYI of the items that are in the ventilation system, rather than in separate compartmentation.

I have discussed more with Colin and Willie, and it could be the materials used by Project Co are non-combustible, (LSF), which may satisfy IOM, however we would need to ask Project Co to confirm.

I have asked Colin to clarify with IOM whether a satisfactory non-combustible response from Project Co would in turn satisfy IOM relative to SHTM compliance.

Will let you know when we hear back from IOM.

Any queries, please give me a call.

Thanks

Graeme

Graeme Greer
Associate

[redacted]

Mott MacDonald
St Vincent Plaza
319 St Vincent Street
Glasgow G2 5LD
United Kingdom

Website | **Twitter** | **LinkedIn** | **Facebook** | **Instagram** | **YouTube**

Mott MacDonald Limited. Registered in England and Wales no. 1243967. Registered office: Mott MacDonald House, 8-10 Sydenham Road, Croydon CR0 2EE, United Kingdom

The information contained in this e-mail is intended only for the person or entity to which it is addressed and may contain confidential and/or privileged material. If you are not the intended recipient of this e-mail, the use of this information or any disclosure, copying or distribution is prohibited and may be unlawful. If you received this in error, please contact the sender and delete the material from any computer.

From: Greer, Graeme
Sent: 20 June 2019 10:54
To: 'Mackenzie, Janice [redacted] Currie, Brian <[redacted]>; Henderson, Ronnie [redacted]; Macrae, Colin [redacted]>; Bain, Kelly J [redacted] Hull, Ashley [redacted]>
Subject: RE: Independent validatiion

Brian / Janice,

Colin has just had a call from IOM commenting that all the AHUs are non-compliant with the SHTMs due to the wiring connections within each section of each AHU, by reference to the following clause of the SHTM;

General
1.41 The equipment built into the ventilation system and its ductwork should be of a type that will neither cause nor sustain combustion. No materials that could sustain biological activity should be used in the construction or assembly of the system.

Initial feedback is this is not a base design issue, and more a manufacturer design issue, which seems odd.

Colin, can you provide more detail / photos to explain IOM's concerns.

Perhaps worth setting up a meeting with IOM this afternoon to discuss current findings? (no problems me coming across if of use).

This could potentially be a significant issue, however suggest we need to find out more to fully understand IOM's comments?

Thanks
Graeme

Graeme Greer
Associate

[redacted]

Mott MacDonald
St Vincent Plaza
319 St Vincent Street
Glasgow G2 5LD
United Kingdom

Website | **Twitter** | **LinkedIn** | **Facebook** | **Instagram** | **YouTube**

Mott MacDonald Limited. Registered in England and Wales no. 1243967. Registered office: Mott MacDonald House, 8-10 Sydenham Road, Croydon CR0 2EE, United Kingdom

The information contained in this e-mail is intended only for the person or entity to which it is addressed and may contain confidential and/or privileged material. If you are not the intended recipient of this e-mail, the use of this information or any disclosure, copying or distribution is prohibited and may be unlawful. If you received this in error, please contact the sender and delete the material from any computer.

From: Mackenzie, Janice [redacted]
Sent: 20 June 2019 08:02
To: Greer, Graeme [redacted]>; Currie, Brian <[redacted]>; Henderson, Ronnie [redacted]; Macrae, Colin <[redacted]>; Bain, Kelly J <[redacted] Hull, Ashley [redacted]
Subject: RE: Independent validatiion

Thanks Graeme, I am happy to send will do so now, so will change wording slightly.

Janice

From: Greer, Graeme [redacted]
Sent: 20 June 2019 07:43
To: Mackenzie, Janice; Currie, Brian; Henderson, Ronnie; Macrae, Colin; Bain, Kelly J; Hull, Ashley
Subject: RE: Independent validatiion

Tanks Janice,

The SHTM / SA query relates to the difference in air change rates for the 4 bed rooms and I think isolation suites. IOM commented the air change rates were lower than SHTM requirements.

Think it depends how we want the information presented to Infection Control. A fail on the IOM report that can be explained by the compromise in the SA, or a note in the IOM report referring to the SA? Perhaps worth a conversation with IOM today?

Not sure about the 2 CT's – they were on the IOM appointment letter, but could perhaps be removed in the same way MRI's were removed?

Updated draft below – given the criticality, might have more impact coming from yourself or Brian? I am at the opticians at 9am, but online until 8.30 if you want me to send?

Thanks

Graeme

Bob / Chris / John / David

Further to OMG this morning, and a follow up meeting with Colin Macrae and Ashely Hull, please refer to the note below of the areas being reviewed by IOM, issues encountered, and support from Project Co relative to the first three days of IOM work,

Areas being reviewed by IOM

1	MRI room G-Q1-134 room vents	
2	MRI room G-Q1-123 room vents	
3	MRI room G-Q1-110 room vents	
4	CT	G-Q1-136
5	AHU 02-22 Plant	
6	CT	G-Q1-059
7	AHU 02-25	
8	MRI room room vents	1-P1-064
9	AHU 02-20 Plant	
10	Theatre Suite 4 (UCV 36)	1-P1-155
11	Theatre Suite 2 (UCV 37)	1-P1-070
12	Theatre Suite 1 (UCV 38)	1-P1-078
13	Theatre Suite 3 (UCV 31)	1-P1-091
14	Angio Procedures	1-P1-093
15	Theatre Suite 3 (UCV 32)	1-P1-131
16	Theatre Suite 4 (UCV 33)	1-P1-129
17	Theatre Suite 5 (34)	1-P1-140
18	Theatre Suite 6 (35)	1-P1-050
19	Theatre Suite 1 (30)	1-P1-032
20	Theatre Suite 2 (UCV31)	1-P1-044
21	AHU 02-19 Plant	1-P1-155
22	AHU 02-16 Plant	1-P1-070
23	AHU 02-15 Plant	1-P1-078
24	AHU 02-17 Plant	1-P1-091
25	AHU 02-18 Plant	1-P1-093
26	AHU 02-11 Plant	1-P1-131
27	AHU 02-12 Plant	1-P1-129
28	AHU 02-13 Plant	1-P1-140
29	AHU 02-14 Plant	1-P1-050
30	AHU 02-09 Plant	1-P1-032
31	AHU 02-10 Plant	1-P1-044
32	HDU 4 bed bay	1-B1-009
33	HDU 4 bed bay	1-B1-031
34	HDU 4 bed bay	1-B1-063
35	HDU single bed cubicle	1-B1-037
36	NNU 3 cot bay	1-B1-065
37	NNU single cot cubicle	1-B1-075
38	Single bed isolation cubicle 10	1-B1-036

39	Single bed isolation cubicle 15	1-B1-026
40	Single bed isolation cubicle 19	1-B1-017
41	Single bed isolation cubicle 20	1-B1-016
42	Single bed isolation room 1	1-H2-021
43	AHU 04-06	
44	IEF 02	
45	IEF 03	
46	IEF 04	
47	IEF 05	
48	IEF 06	
49	AHU 04-07 changeover	
50	Single bed isolation room 5	3-C1.4-072
51	Single bed isolation room 1	3-C1.4-052
52	Single bed isolation room 2	3-C1.4-049
53	Single bed isolation room 3	3-C1.4-043
54	Single bed isolation room 4	3-C1.4-040
55	Single bed isolation room	3-C1.3-008
56	AHU 04-07	
57	IEF 10	
58	IEF 11	
59	IEF 12	
60	IEF 13	
61	IEF 14	
62	IEF 19	
63	AHU 04-06 changeover	
64	Single bed isolation room 1	3-C1.1-040
65	Single bed isolation room 2	3-C1.1-036
66	Single bed isolation room 3	3-C1.1-033
67	Single bed isolation room TC	3-C1.1-004
68	AHU 04-08	
69	IEF 15	
70	IEF 16	
71	IEF 17	
72	IEF 18	
73	Single bed isolation room 5	1-L1-068
74	AHU 02-24	
75	IEF 07	
76	Single bed isolation room 1	G-A2-072
77	AHU 02-23	
78	IEF 01	
79	Single bed isolation room 17	1-L2-039
80	Single bed isolation room 16	1-L2-135
81	AHU 02-21	
82	IEF 08	
83	IEF 09	
84	Recovery	1-P1-109
85	AHU	
86	Recovery	1-P1-029

87	AHU	

Issues encountered by IOM

1. Issues encountered 17 June 19
    - Ceiling tiles needed to be replaced in the adjacent corridors outside of Theatre 35 – 1-P1-050 – could impact balancing of rooms.
    - There are no locks on the access to corridors 1P1-126 and 1P1-110, hence the clean zone was not locked down.
2. Issues encountered 18 June 19
    - NNU – ceilings have been removed post Clinical Clean, hence test could not be undertaken.
    - NNU – no locks on the NNU doors, hence clean zone is not locked down.
    - G G-A2-072 has a door grille and ceiling tile debris in the en-suite which will require to be removed before the clinical clean is redone.
    - AHU 04-06 had failed (no extract from the room), however no action had been taken.
3. Issues encountered 18 June 19
    - None as yet

Support from Project Co

1. In corridors outside of the areas being reviewed by IOM, could Project Co please check all corridor ceiling tiles are complete.
2. In the rooms being reviewed by IOM, could Project Co please confirm that all works are complete, including ceiling tiles.
3. Appreciating work is underway on the access control for double swing doors, could Project Co please secure the areas that have already been clinically cleaned, particularly access to corridors 1P1-126 and 1P1-110.
4. Whilst debris should not be in the rooms post clinical clean, could Project Co ensure all debris has been removed.
5. Could Project Co please ensure nobody else enters a room after it has been clinically cleaned.
6. Could Project Co please confirm all AHU's are working for IOM to undertaken the independent validation.
7. If there any rooms that you find with issues post clinical clean, can you please liaise with Colin and Ashely in order the Board can re-organise a clinical clean.
8. Please also note that IOM are working this Saturday and Sunday. Colin Macrae will provide a list of all the rooms being reviewed during the weekend, hence please can these areas be double checked before close of play on Friday?

You will appreciate the Independent Validation is critical to infection control / patients moving in, hence please can you action as soon as possible please?

In terms of the water flushing the Board are undertaking in the above areas, the Board will inform you as soon as the Board stop flushing.

If there are any queries on the above, please don't hesitate to call.

Happy to set up another meeting if we think required?

Kind Regards
Graeme

-----Original Message-----
From: Mackenzie, Janice [redacted]

Sent: 19 June 2019 22:36
To: Greer, Graeme [redacted] Currie, Brian [redacted]
Henderson, Ronnie [redacted] Macrae, Colin [redacted];
Bain, Kelly J [redacted]>; Hull, Ashley <[redacted]>
Subject: RE: Independent validatiion

Thanks Graeme for this. I'm not sure what the SA said and the different requirements to the SHTM. From an Infection Control and Facilities perspective I'm pretty sure they would want the results against the SHTM

As for the draft email I'm happy with it but just couple of queries I note the 2 CT Scanners are listed but I didn't think we were doing sampling in those rooms?

Given the criticality of this issue can we ask them to confirm that all actions have been done by close of at at the latest.

Do we need to say something about the water flushing which we are doing in these rooms and we will let them know when we will stop doing this.

Re point 4 do we want them to liaise with Colin and Ashley re removal of any debris and I assume we will then need to clean area again so this needs to be done as a matter of urgency.

Also wonder if for the avoidance of doubt we just need to reemphasize the importance of this external validation and implications of tests fail!

Would be keen email goes out in the morning to keep the momentum up.

Sent with BlackBerry Work
[redacted]

_____
From: "Greer, Graeme" [redacted]
Sent: 19 Jun 2019 15:55
To: "Currie, Brian" [redacted]>; "Mackenzie, Janice"
[redacted]>; "Henderson, Ronnie" [redacted]
"Macrae, Colin" [redacted] "Bain, Kelly J" [redacted]>; "Hull, Ashley"
[redacted]
Subject: RE: Independent validatiion

Hi all,

Further to OMG this morning, and meeting with Colin, Ashley and myself, note below of internal NHSL / IOM issues and issues for Project Co to support.

Internal NHSL / IOM

1. IOM are checking against SHTM, and not the settlement agreement. Do the Board want to inform IOM now, or wait for the report and clarify the settlement agreement amendments.

Project Co support

Draft below to Project Co, any comments?

Bob / Chris / John / David

Further to OMG this morning, and a follow up meeting with Colin Macrae and Ashely Hull, please refer to the note below of the areas being reviewed by IOM, issues encountered, and support from Project Co relative to the first three days of IOM work,

Areas being reviewed by IOM
1

MRI room G-Q1-134 room vents

2

MRI room G-Q1-123 room vents

3

MRI room G-Q1-110 room vents

4

CT

G-Q1-136

5

AHU 02-22 Plant

6

CT

G-Q1-059

7

AHU 02-25

8

MRI room room vents

1-P1-064

9

AHU 02-20 Plant

10

Theatre Suite 4 (UCV 36)

1-P1-155

11

Theatre Suite 2 (UCV 37)

1-P1-070

12

Theatre Suite 1 (UCV 38)

1-P1-078

13

Theatre Suite 3 (UCV 31)

1-P1-091

14

Angio Procedures

1-P1-093

15

Theatre Suite 3 (UCV 32)

1-P1-131

16

Theatre Suite 4 (UCV 33)

1-P1-129

17

Theatre Suite 5 (34)

1-P1-140

18

Theatre Suite 6 (35)

1-P1-050

19

Theatre Suite 1 (30)

1-P1-032

20

Theatre Suite 2 (UCV31)

1-P1-044

21

AHU 02-19 Plant

1-P1-155

22

AHU 02-16 Plant

1-P1-070

23

AHU 02-15 Plant

1-P1-078

24

AHU 02-17 Plant

1-P1-091

25

AHU 02-18 Plant

1-P1-093

26

AHU 02-11 Plant

1-P1-131

27

AHU 02-12 Plant

1-P1-129

28

AHU 02-13 Plant

1-P1-140

29

AHU 02-14 Plant

1-P1-050

30

AHU 02-09 Plant

1-P1-032

31

AHU 02-10 Plant

1-P1-044

32

HDU 4 bed bay

1-B1-009

33

HDU 4 bed bay

1-B1-031

34

HDU 4 bed bay

1-B1-063

35

HDU single bed cubicle

1-B1-037

36

NNU 3 cot bay

1-B1-065

37

NNU single cot cubicle

1-B1-075

38

Single bed isolation cubicle 10

1-B1-036

39

Single bed isolation cubicle 15

1-B1-026

40

Single bed isolation cubicle 19

1-B1-017

41

Single bed isolation cubicle 20

1-B1-016

42

Single bed isolation room 1

1-H2-021

43

AHU 04-06

44

IEF 02

45

IEF 03

46

IEF 04

47

IEF 05

48

IEF 06

49

AHU 04-07 changeover

50

Single bed isolation room 5

3-C1.4-072

51

Single bed isolation room 1

3-C1.4-052

52

Single bed isolation room 2

3-C1.4-049

53

Single bed isolation room 3

3-C1.4-043

54

Single bed isolation room 4

3-C1.4-040

55

Single bed isolation room

3-C1.3-008

56

AHU 04-07

57

IEF 10

58

IEF 11

59

IEF 12

60

IEF 13

61

IEF 14

62

IEF 19

63

AHU 04-06 changeover

64

Single bed isolation room 1

3-C1.1-040

65

Single bed isolation room 2

3-C1.1-036

66

Single bed isolation room 3

3-C1.1-033

67

Single bed isolation room TC

3-C1.1-004

68

AHU 04-08

69

IEF 15

70

IEF 16

71

IEF 17

72

IEF 18

73

Single bed isolation room 5

1-L1-068

74

AHU 02-24

75

IEF 07

76

Single bed isolation room 1

G-A2-072

77

AHU 02-23

78

IEF 01

79

Single bed isolation room 17

1-L2-039

80

Single bed isolation room 16

1-L2-135

81

AHU 02-21

82

IEF 08

83

IEF 09

84

Recovery

1-P1-109

85

AHU

86

Recovery

1-P1-029

87

AHU

Issues encountered by IOM

1. Issues encountered 17 June 19

* Ceiling tiles needed to be replaced in the adjacent corridors outside of Theatre 35 – 1-P1-050 – could impact balancing of rooms.
* There are no locks on the access to corridors 1P1-126 and 1P1-110, hence the clean zone was not locked down.

1. Issues encountered 18 June 19

* NNU – ceilings have been removed post Clinical Clean, hence test could not be undertaken.
* NNU – no locks on the NNU doors, hence clean zone is not locked down.
* G G-A2-072 has a door grille and ceiling tile debris in the en-suite which will require to be removed before the clinical clean is redone.
* AHU 04-06 had failed (no extract from the room), however no action had been taken.

1. Issues encountered 18 June 19

* None as yet

Support from Project Co

1. In corridors outside of the areas being reviewed by IOM, could Project Co please check all corridor ceiling tiles are complete.

2. In the rooms being reviewed by IOM, could Project Co please confirm that all works are complete, including ceiling tiles.
3. Appreciating work is underway on the access control for double swing doors, could Project Co please secure the areas that have already been clinically cleaned, particularly access to corridors 1P1-126 and 1P1-110.
4. Whilst debris should not be in the rooms post clinical clean, could Project Co ensure all debris has been removed.
5. Could Project Co please ensure nobody else enters a room after it has been clinically cleaned.
6. Could Project Co please confirm all AHU's are working for IOM to undertaken the independent validation.

Please also note that IOM are working this Saturday and Sunday. Colin Macrae will provide a list of all the rooms being reviewed during the weekend, hence please can these areas be checked for the above on Friday.

If there are any queries on the above, please don't hesitate to call.

Happy to set up another meeting if we think required?

Kind Regards
Graeme

Graeme Greer
Associate

[redacted]

Mott MacDonald
St Vincent Plaza
319 St Vincent Street
Glasgow G2 5LD
United Kingdom

[redacted]

[redacted]

Mott MacDonald Limited. Registered in England and Wales no. 1243967. Registered office: Mott MacDonald House, 8-10 Sydenham Road, Croydon CR0 2EE, United Kingdom

The information contained in this e-mail is intended only for the person or entity to which it is addressed and may contain confidential and/or privileged material. If you are not the intended recipient of this e-mail, the use of this information or any disclosure, copying or distribution is prohibited and may be unlawful. If you received this in error, please contact the sender and delete the material from any computer.

From: Greer, Graeme
Sent: 18 June 2019 11:57
To: Currie, Brian [redacted] Mackenzie, Janice [redacted]
Cc: Henderson, Ronnie [redacted]
Macrae, Colin [redacted] >; Bain, Kelly J [redacted] >; Hull, Ashley [redacted]
Subject: RE: Independent validatiion

Apologies copied Ashley as well.

Graeme Greer
Associate

[redacted]

Mott MacDonald
St Vincent Plaza
319 St Vincent Street
Glasgow G2 5LD
United Kingdom

[redacted]

[redacted]

Mott MacDonald Limited. Registered in England and Wales no. 1243967. Registered office: Mott MacDonald House, 8-10 Sydenham Road, Croydon CR0 2EE, United Kingdom

The information contained in this e-mail is intended only for the person or entity to which it is addressed and may contain confidential and/or privileged material. If you are not the intended recipient of this e-mail, the use of this information or any disclosure, copying or distribution is prohibited and may be unlawful. If you received this in error, please contact the sender and delete the material from any computer.

From: Greer, Graeme
Sent: 18 June 2019 11:22
To: Currie, Brian [redacted] Mackenzie, Janice [redacted]
Cc: Henderson, Ronnie [redacted] Bain, Kelly J [redacted]
Subject: RE: Independent validatiion

Brian / Janice,

Just caught up with Colin, and summary below of IOM progress with the Independent Validation;

Areas to be undertaken – 3 Conventional Operating Theatres, 7 UCV Theatres, 19 Isolation Rooms, angiography procedures room, 1 Intra-operative, ITU, NNU, 3 Standard MRI's and 2 CT's.

1. 17 June 19 - three Conventional Operating Theatres were undertaken yesterday – scope in accordance with appointment letter and includes the following (paraphrased);

1. Supply and extract airflow measurements
2. Airflow measurements in the recovery area
3. Pitot duct traverse to measure total quantities of fresh air
4. Pressure differentials across doors to provide pressure cascade figures
5. Electronic particle counting to assess the air filtration efficiency between inlet air and theatre supply air
6. Noise measurements in the theatres
7. Audit of AHU's
8. Audit of operating suite
9. UKAS accredited airborne microbiological sampling and enumeration in an empty theatre
10. Check the fire damper proving test has been carried out
11. Check control / warning lights and surgeons panel display function
12. Dirty filter simulation to assess whether the AHU can deliver the design airflow volume even under dirty filter conditions
13. Smoke visualisation test to assess mixing / dilution
14. Full validation report

1. Scope for all other areas to be clarified with IOM, the appointment letter only covers Conventional Operating Theatres and Ultra Clean Ventilation.
2. Issues encountered 17 June 19

1. Ceiling tiles needed to be replaced in the adjacent corridors – could impact balancing of rooms.
2. There are no locks on the theatre doors, hence the clean zone is not locked down
3. MRI's have been removed from the scope – do we know why?

1. Issues encountered 18 June 19

1. NNU – ceilings have been removed post Clinical Clean, hence test cannot be undertaken today
2. NNU – no locks on the NNU doors, hence clean zone is not locked down

To keep us updated on progress, Colin will provide an informal tracker of the rooms completed.

I think worth noting there does appear to be significant risk associated with lack of lock down of the areas, both in terms of impacting the progress of IOM, and also longer terms cleanliness of the rooms. Can we discuss at TDG this afternoon?

Kind Regards
Graeme

Graeme Greer
Associate

[redacted]

Mott MacDonald
St Vincent Plaza
319 St Vincent Street
Glasgow G2 5LD
United Kingdom

Mott MacDonald Limited. Registered in England and Wales no. 1243967. Registered office: Mott MacDonald House, 8-10 Sydenham Road, Croydon CR0 2EE, United Kingdom

The information contained in this e-mail is intended only for the person or entity to which it is addressed and may contain confidential and/or privileged material. If you are not the intended recipient of this e-mail, the use of this information or any disclosure, copying or distribution is prohibited and may be unlawful. If you received this in error, please contact the sender and delete the material from any computer.

From: Henderson, Ronnie
Sent: 03 June 2019 13:03
To: David Wilson
Subject: Independent validatiion

Hi David,

We will be carrying out the independent validation of all critical ventilation systems beginning 17th June for approx 8-10 days. Can you please ensure that all the following areas and systems are in as complete condition to allow full inspection to take place:

* Operating Theatres
* Recovery Areas
* Intra-Operative MRI
* ITU/HDU/NNU
* Isolation Suites

It may be that CT and MRI areas on the ground floor will also be independently validated.

On another note – Stephen Evans responded re balancing of the IOMRI with theatre vent, can you advise availability.

Regards

Ronnie

Ronnie Henderson
Commissioning Manager Hard FM
RHSC & DCN - Little France
NHS Lothian

RHSC & DCN Site Office
Little France Crescent
Edinburgh
EH16 4TJ

[redacted]

****
The information contained in this message may be confidential or legally privileged and is intended for the addressee only. If you have received this message in error or there are any problems please notify the originator immediately. The unauthorised use, disclosure, copying or alteration of this message is strictly forbidden.
****

****

The information contained in this message may be confidential or

legally privileged and is intended for the addressee only. If you

have received this message in error or there are any problems

please notify the originator immediately. The unauthorised use,

disclosure, copying or alteration of this message is

strictly forbidden.

****

****

The information contained in this message may be confidential or

legally privileged and is intended for the addressee only. If you

have received this message in error or there are any problems

please notify the originator immediately. The unauthorised use,

disclosure, copying or alteration of this message is

strictly forbidden.

****

Area	item	Issue
General	Systems do not appear to have been commissioned well	Various issues identified below
General	Swirl diffusers have been widely used in the development.	Not normally used in critical areas like theatres as they can be difficult to measure accurately with balometers and they can impact on wound site velocity
Preparation	Some areas are not completed and ready for handover. Eg ceiling tiles still missing	
Theatres	Very limited extract in theatre corridors. Corridors are not at 0 absolute pressure and do not meet required 7 ach/hr (SHTM03-01 part A appndix 2 Table A2)	No escape for surplus air. Could impact on open door protection. Pressure in corridors is pushing fire doors open
Theatres	Issues with doors, door actuators, closers and interlocking to DU's	
Theatres	Some prep rooms do not meet reaquired air supply volumes. (theatres 35, 31, 32, 33 and 38)	Should be 100l/s for SPS room.
Theatres	Most theatres do not properly control temperature	There are a number of faulty control valves on plant/heater batteries
Theatres	Concers about open door protection (eg theatre 34)	Theatre supply 1171, LLE365, scrub 73. Leaves 733 for open door vs required 750.
Theatres	UCV clean zone not marked in flooring - not tape but alternative coloured zone or lines in flooring.	Para 7.108 of SHTM 03-01 part A and Para 6.26of HBN 26 which states 'In theatres with ultra-clean ventilation the floor area enclosed by the hood should be marked with lines or a contrasting coloured area of flooring'.
Theatres	Some fabric issues in theatres (eg holes to fill and under benching gaps to fill)	
Theatres	Theatre 33 - 4 cells fail 0.2 test at 0.17m/s. Filter screen may have been adapted	Re-commission UCV - may need HEPA filters as pressure drop is 170pa vs typical 100/110 for clean filters
Theatres	It is understood that extract grilles in DU are supplied one from each theatre.	Systems will need to be interlocked so both theatres are running when any one is in use.
Theatres	Dirty utility extract rates do not meet requirements in some theatres. Should be 410l/s.	Theatres 30, 36, 37, 33, 38.
Theatres	issues on some theatre light stems, covers missing, not well fitted and cabling exposed	
Theatres	Individual grilles in conventional theatres not balanced which can impact on air flows at patient wound site.	BSRIA Guide AG 3/89.3 Table 1 page 10 requires them to be within 10% of lowest grille reading.
Theatres	Noise slightly high in UCV theatres	measurements 3.5 dbA above requirements. We would expect new facilities to meet the SHTM stsndard.
Theatres	UCV hepa filter pressure drops relatively high (140-170 pa) compared with expected 100/110 pa for new filters	
Theatres	Hepa filter screens on UCV are distorted in places	
Isolation rooms	Several isolation rooms on one AHU. HBN 04-01 supplement 1 (2013) Para 2.37 states that ideally each isolation suite should have its own supply and extract system.	Para 2.37 of HBN 04-01 states that ideally each isolation suite should have its own dedicated supply and extract system
Isolation rooms	Some isolation rooms not achieving the required 10 ach/hr	Min running at 5 ach and some just under 10
Isolation rooms	Back up arrangements appear to be very complex and as such likely to be challenging in future	
HDU's	Only achieving 3-4 ach/hr vs required 10	NHS have apparently agreed this??
AHU's	Filter pleat orientation incorrect on top row of final filters	Should be vertical
AHU's	Pre filters showing signs of bypass	
AHU's	Magnahelic gauges not marked for clean and dirty limits	
AHU's	Insufficient access for cleaning (eg inlets) and access hatches are too small for cleaning/maintenance	
AHU's	Some duct traverse test points are not plugged	
AHU's	Surplus drip tray in AHU (?humidifier removed?). Tray drain is not blanked off	
AHU's	Cooling coil drip tray area not easy to clean. Cooling coil baffles cannot be easily removed due to cable installation	
AHU's	Trap arrangements incorrect. No suitable air gaps and traps dirty and incorrectly installed	
AHU's	Magnahelic gauge scale too wide	1-500pa wheras 1-250 reflects likely filter pressure drops
AHU's	Motorised dampers take a long time to open and close which impacts on the speed of auto-changeover	No spring return fitted so may not close in the event of power failure.
AHU's	Plant labelling incorrect and shows incorrect areas served.	Temporary labelling installed
AHU's	Branch ducts not generally marked up to show areas served	
AHU's	Auto change over arrangements need to be fully tested. Some MD's do not close on plant isolation and some units will not re-start after both motors have been isolated.	
AHU's	Some motors running at over 95% speed so there is limites scope for system to overcome dirty filter pressure drop and maintain system performance	
BMS	Communication problems beteen BMS and AHU (eg theatre 33)	
BMS	It is not clear if critical plant will operate in stand alone mode in the event of issues with BMS or comms	

AUHs	cableing inside AHU also cable connectors inside AHU, potentail for electrical faults to cause as ource of fire within the airstraem. Potentail for smoke/fume to enter clinical areas	Similar situation was found at an NHS hopspital in the NorthEast 2016 all wiring had to be removed from AHUs before handover to Trust

Area	Item	Issue	Comments
General	Systems do not appear to have been commissioned well	Various issues identified below	
General	Swirl diffusers have been widely used in the development.	Not normally used in critical areas like theatres as they can be difficult to measure accurately with balometers and they can impact on wound site velocity	Agree SHTM 03-01 Part A Section 5.68 & 7.66 Swirl diffusers do not provide a direct downward airflow. Surprised these have been installed so would also check the designers grille schedule to see if that what was specified. Would agree with IOM Comments. Non Compliance
Preparation	Some areas are not completed and ready for handover. Eg ceiling tiles still missing		No Comment
Theatres	Very limited extract in theatre corridors. Corridors are not at 0 absolute pressure and do not meet required 7 ach/hr (SHTM03-01 part A appndix 2 Table A2)	No escape for surplus air. Could impact on open door protection. Pressure in corridors is pushing fire doors open	I would do a full pressure cascade of the theatre suite and corresponding pressure cascade to adjoing spaces. Should be a couple of pascals relative to the not theatre suite area. You need the extract to balance the pressure of the amount of supply air going into these corridors. Would agrere with IOM Comments. Non Compliance
Theatres	Issues with doors, door actuators, closers and interlocking to DU's		Was there a check sheet for all doors demonstrating opening forces and functionality. Suspect not.
Theatres	Some prep rooms do not meet reaquired air supply volumes. (theatres 35, 31, 32, 33 and 38)	Should be 100l/s for SPS room.	Assume this is for UCV Theatres and SPS Prep requires to have minimum of 100l/s. SHTM 03-01 Part A (Use Layout No4 on page 149). Non Compliance
Theatres	Most theatres do not properly control temperature	There are a number of faulty control valves on plant/heater batteries	I would have temperture trends to demonstrate the surgeons panel and associated spaces are controlling correctly throughout the 18oc to 25oc band. Non Compliance
Theatres	Concerns about open door protection (eg theatre 34)	Theatre supply 1171, LLE365, scrub 73. Leaves 733 for open door vs required 750.	Agree with IOM,s comments based on double door from clean to dirty. Non Compliance unless designer has calculations to demonstrate. Non Compliance
Theatres	UCV clean zone not marked in flooring - not tape but alternative coloured zone or lines in flooring.	Para 7.108 of SHTM 03-01 part A and Para 6.26of HBN 26 which states 'In theatres with ultra-clean ventilation the floor area enclosed by the hood should be marked with lines or a contrasting coloured area of flooring'.	Agree with IOM. The clean zone should be marked and ensure the outside line is the correct position relative to the canopy. Usually have to Plumb Line. Non Compliance
Theatres	Some fabric issues in theatres (eg holes to fill and under benching gaps to fill)		Should be dealt with before area becomes operational to minimise infection possibility.
Theatres	Theatre 33 - 4 cells fail 0.2 test at 0.17m/s. Filter screen may have been adapted	Re-commission UCV - may need HEPA filters as pressure drop is 170pa vs typical 100/110 for clean filters	Requires discussed with who the canopy manufacturer is and review their validation documentation. IOM have identified a non compiance which is usually dealt with by both parties witnessing. Ensure the primary air certification is prior to the canopy validation dates. Compliance Issue
Theatres	It is understood that extract grilles in DU are supplied one from each theatre.	Systems will need to be interlocked so both theatres are running when any one is in use.	This would be noncompliant if it is. Has this been raised as a derrogation?? Otherwise compliance issue
Theatres	Dirty utility extract rates do not meet requirements in some theatres. Should be 410l/s.	Theatres 30, 36, 37, 33, 38.	Agree with IOM should meet the minimum of 410l/s. Has designer / commissioning manager not checked this first. Complance Issue
Theatres	issues on some theatre light stems, covers missing, not well fitted and cabling exposed		Requires corrected. How did the contractor verify his side before validation if this was the case.
Theatres	Individual grilles in conventional theatres not balanced which can impact on air flows at patient wound site.	BSRIA Guide AG 3/89.3 Table 1 page 10 requires them to be within 10% of lowest grille reading.	Agree - Non Compliance
Theatres	Noise slightly high in UCV theatres	measurements 3.5 dbA above requirements. We would expect new facilities to meet the SHTM standard.	Agree - Non Compliance
Theatres	UCV hepa filter pressure drops relatively high (140-170 pa) compared with expected 100/110 pa for new filters		Was the ductwork cleaned and if so is the evidence available to demonstrate presssure drop when canopy was commissioned or have they horsed the supply up to achieve velocities?
Theatres	Hepa filter screens on UCV are distorted in places		Requires discused with canoy manufacturer.
Theatres	UCV hepa filter pressure drops relatively high (140-170 pa) compared with expected 100/110 pa for new filters		Was the ductwork cleaned and if so is the evidence available to demonstrate presssure drop when canopy was commissioned or have they horsed the supply up to achieve velocities?
Theatres	Hepa filter screens on UCV are distorted in places		Requires discused with canoy manufacturer.
Isolation Rooms	Several isolation rooms on one AHU. HBN 04-01 supplement 1 (2013) Para 2.37 states that ideally each isolation suite should have its own supply and extract system.	Para 2.37 of HBN 04-01 states that ideally each isolation suite should have its own dedicated supply and extract system	Is a derrogation been agreed????
Isolation Rooms	Some isolation rooms not achieving the required 10 ach/hr	Min running at 5 ach and some just under 10	Would agree that this is non compliant however what was the guidance that the isolation rooms were built to?? If it is HBN 04-01 They are non compliant.
Isolation Rooms	Back up arrangements appear to be very complex and as such likely to be challenging in future		Don’t know systems and what has been agreed. No comment
HDU's	Only achieving 3-4 ach/hr vs required 10	NHS have apparently agreed this??	Is a derrogation been agreed????
AHU's	Filter pleat orientation incorrect on top row of final filters	Should be vertical	Poor AHU commissioning
AHU's	Pre filters showing signs of bypass		Poor AHU commissioning
AHU's	Magnahelic gauges not marked for clean and dirty limits		Should have clean and dirty range identified
AHU's	Insufficient access for cleaning (eg inlets) and access hatches are too small for cleaning/maintenance		Require more access hatches. If you can access to clean how was it cleaned in the first place????
AHU's	Some duct traverse test points are not plugged		Require Plugged.
AHU's	Surplus drip tray in AHU (?humidifier removed?). Tray drain is not blanked off		Normally drip tray is in case of future humidity addition SHTM 03-01 Part A Section 4.92. Drain should be blanked
AHU's	Cooling coil drip tray area not easy to clean. Cooling coil baffles cannot be easily removed due to cable installation		Require to be easy to remove otherwise PPM will not be carried out.
AHU's	Trap arrangements incorrect. No suitable air gaps and traps dirty and incorrectly installed		Non compliant with SHTM 03-01 Part B 3.30 & 3.27 & 3.28
AHU's	Magnahelic gauge scale too wide	1-500pa wheras 1-250 reflects likely filter pressure drops	I agree with statement however as long as clean and dirty get suitably marked the no compliance issue.
AHU's	Motorised dampers take a long time to open and close which impacts on the speed of autochangeover	No spring return fitted so may not close in the event of power failure.	Require to be spring return on event of power failure SHTM 03-01 Part A
AHU's	Plant labelling incorrect and shows incorrect areas served.	Temporary labelling installed	Non compliant with SHTM 03-01 Part B 3.60
AHU's	Branch ducts not generally marked up to show areas served		Non compliant with SHTM 03-01 Part B 3.60
AHU's	Auto change over arrangements need to be fully tested. Some MD's do not close on plant isolation and some units will not re-start after both motors have been isolated.		Is their construction phase validation information from contractor if not requires redone.
AHU's	Some motors running at over 95% speed so there is limites scope for system to overcome dirty filter pressure drop and maintain system performance		Is their construction phase validation information from contractor they should demonstrate dirty filter condition and AHU ramps to accommodate this condition.
BMS	Communication problems beteen BMS and AHU (eg theatre 33)		????

BMS	It is not clear if critical plant will operate in stand alone mode in the event of issues with BMS or comms		Is their construction phase validation information from contractor . Given the extent of items above I would revalidate after all issues have been dealt with and compliance met.
AHU	cableing inside AHU also cable connectors inside AHU, potentail for electrical faults to cause as ource of fire within the airstraem. Potentail for smoke/fume to enter clinical areas	Similar situation was found at an NHS hopspital in the NorthEast 2016 all wiring had to be removed from AHUs before handover to Trust	Don’t know enough to provide comment. If it is plug fans then the cabling will be within the fan chamber

SECTION 5

REVIEWABLE DESIGN DATA

Part 1: Endorsed RDD Item - Level A or Level B but subject to re-submission to the Board through Schedule Part 8 (Review Procedure)

As set out below in this Part 1, certain Design Data has been endorsed by the Board as a Level A or Level B at Financial Close ("**Endorsed RDD Item**").

Project Co has provided and the Board has reviewed the information noted below as Endorsed RDD Items (subject to the following Board comments that shall be incorporated into each relevant drawing by Project Co and the drawings shall be re-submitted by Project Co to the Board through Schedule Part 8 (*Review Procedure)*).

If Project Co considers that the Board comments below on any Endorsed RDD Item amount to a Change, Project Co shall, before complying with the comments and resubmitting the Endorsed RDD, notify the Board of the same and, if it is agreed by the parties or determined pursuant to Schedule Part 20 (*Dispute Resolution Procedure*) that a Change would arise if the comments were complied with, the Board may, if it wishes, implement the Change and it shall be dealt with in accordance with Schedule Part 16 (*Change Protocol*).

In the event that such Endorsed RDD Items are developed further by Project Co under any design development, such Endorsed RDD Items shall be re-submitted by Project Co to the Board for approval under Schedule Part 8 *(Review Procedure*).

Drawing Reference	Rev	Drawing Title	Comment	Drawing Status
HLM-SZ-00-PL-220-001	06	GENERAL ARRANGEMENT GROUND FLOOR LAYOUT	Room No G-Q1-099/092/086 Re-name as “Shelled Space”. Lift configuration FM-002/003 to be updated. ED ambulance canopy to be extended. Add Section lines and references.	B
HLM-SZ-01-PL-220-001	06	GENERAL ARRANGEMENT FIRST FLOOR LAYOUT	Room No 1-P1-097 Re-name as “Image Intensifier Bay”. Room No 1-P1-064 – show access panel in external wall. Lift configuration FM-002/003 to be updated. Add Section lines and references.	B
HLM-SZ-02-PL-220-001	06	GENERAL ARRANGEMENT SECOND FLOOR LAYOUT	Lift configuration FM-002/003 to be updated. Add Section lines and references.	B
HLM-SZ-03-PL-220-001	06	GENERAL ARRANGEMENT THIRD FLOOR LAYOUT	Lift configuration FM-002/003 to be updated. Add Section lines and references.	B

Drawing Reference	Rev	Drawing Title	Comment	Drawing Status
HLM-SZ-04-PL-220-001	06	GENERAL ARRANGEMENT FOURTH FLOOR LAYOUT	Lift configuration FM-002/003 to be updated. Add Section lines and references.	B
HLM-SZ-06-PL-240-001	05	GENERAL ARRANGEMENT ROOF LAYOUT	No comment	A
HLM-SZ-B1-PL-220-001	07	GENERAL ARRANGEMENT BASEMENT LAYOUT	Lift configuration FM-002/003 to be updated. Add Section lines and references.	B
HLM-SZ-00-PL-400-400	03	GROUND FLOOR DEPARTMENT KEY PLAN	No comment	A
HLM-SZ-01-PL-400-400	02	FIRST FLOOR DEPARTMENT KEY PLAN	No comment	A
HLM-SZ-02-PL-400-400	02	SECOND FLOOR DEPARTMENT KEY PLAN	No comment	A
HLM-SZ-03-PL-400-400	02	THIRD FLOOR DEPARTMENT KEY PLAN	No comment	A
HLM-SZ-04-PL-400-400	02	FOURTH FLOOR DEPARTMENT KEY PLAN	No comment	A
HLM-SZ-B1-PL-400-400	02	BASEMENT DEPARTMENT KEY PLAN	No comment	A
HLM-SZ-SL-EL-251-001	07	GENERAL ARRANGEMENT NORTH ELEVATION	No comment	A
HLM-SZ-SL-EL-251-002	07	GENERAL ARRANGEMENT SOUTH ELEVATION	Remove “A+E” lettering from canopy.	B
HLM-SZ-SL-EL-251-003	09	GENERAL ARRANGEMENT EAST ELEVATION	No comment	A
HLM-SZ-SL-EL-251-004	09	GENERAL ARRANGEMENT WEST ELEVATION	No comment	A
HLM-SZ-SL-EL-251-005	04	GENERAL ARRANGEMENT ATRIUM ELEVATION	No comment	A
HLM-SZ-SL-EL-251-010	03	COURTYARDS A & B ELEVATIONS GENERAL ARRANGEMENT	No comment	A

Drawing Reference	Rev	Drawing Title	Comment	Drawing Status
HLM-SZ-SL-EL-251-011	05	COURTYARDS C & D ELEVATIONS GENERAL ARRANGEMENT	No comment	A
HLM-SZ-SL-EL-251-012	04	COURTYARDS E & F ELEVATIONS GENERAL ARRANGEMENT	No comment	A
HLM-SZ-SL-EL-251-013	02	COURTYARD G ELEVATIONS GENERAL ARRANGEMENT	No comment	A
HLM-SZ-SL-EL-251-102	05	GENERAL ARRANGEMENT SOUTH ELEVATION & ENERGY CENTRE	Remove “A+E lettering” from canopy. RIE ambulant canopy to be developed as part of RDD.	B
HLM-SZ-SL-SE-250-001	05	GENERAL ARRANGEMENT SECTION A-A	No comment	A
HLM-SZ-SL-SE-250-002	03	GENERAL ARRANGEMENT SECTION B-B	No Comment	A
HLM-SZ-SL-SE-250-003	07	GENERAL ARRANGEMENT SECTION C-C	No comment	A
HLM-SZ-SL-SE-250-004	07	GENERAL ARRANGEMENT SECTION D-D	No comment	A
HLM-SZ-SL-SE-250-005	03	GENERAL ARRANGEMENT SECTION E-E	No comment	A
HLM-Z5-SL-EL-251-001	06	ENERGY CENTRE ELEVATIONS & SECTIONS	No comment	A
HLM-SZ-00-PL-230-001	01	GROUND FLOOR INTERNAL BALUSTRADE SCOPE	No comment.	A
HLM-SZ-01-PL-230-001	01	FIRST FLOOR INTERNAL BALUSTRADE SCOPE	Board to confirm balustrade heights	B
HLM-SZ-02-PL-230-001	01	SECOND FLOOR INTERNAL BALUSTRADE SCOPE	Board to confirm balustrade heights.	B
HLM-SZ-03-PL-230-001	01	THIRD FLOOR INTERNAL BALUSTRADE SCOPE	Room 3-COR-008-balustrade type missing. Board to confirm balustrade heights.	B
HLM-SZ-04-PL-230-001	01	FOURTH FLOOR INTERNAL BALUSTRADE SCOPE	Complete details of all balustrade types. Board to confirm balustrade heights. IHSL to advise parapet type at Classrooms, Restaurant etc.	B

Drawing Reference	Rev	Drawing Title	Comment	Drawing Status
HLM-Z1-SL-SE-230-001	02	TYPICAL ATRIUM BRIDGE SECTIONS	Board to confirm balustrade heights	B
HLM-Z1-SL-SE-230-002	01	TYPICAL ATRIUM BRIDGE SECTIONS	Board to confirm balustrade heights	B
HLM-SZ-00-PL-240-001	04	GROUND FLOOR ROOF LAYOUT	No comment.	A
HLM-SZ-01-PL-240-001	05	FIRST FLOOR ROOF LAYOUT	No comment.	A
HLM-SZ-02-PL-240-001	05	SECOND FLOOR ROOF LAYOUT	Courtyards and Terrace noted incorrectly as accessible. 1no Courtyard will be accessible following discussion with the Board post FC. Board to confirm balustrade heights.	B
HLM-SZ-03-PL-240-001	06	THIRD FLOOR ROOF LAYOUT	Board to confirm balustrade heights.	B
HLM-SZ-04-PL-240-001	06	FOURTH FLOOR ROOF LAYOUT	No comment	A
HLM-Z4-00-AS-240-002	02	DCN AND MAIN ENTRANCE CANOPY LAYOUT	No comment	A
All acoustic drawings	All	All Acoustic Drawings – General Comment	Generally there is an inconsistent approach to office partitions – many though not all are not provided with a minimum acoustic performance. Although not clinical spaces, minimum performance criteria for office partitions are provided in SHTM-08-01. Latest drawings show improvements but still concern over a number of offices.	B
All acoustic drawings with multi-bed rooms	All	All acoustic drawings with multi-bed rooms	Partitions separating multi-bed rooms have been specified with Dntw 37dB in line with general hospital multi-bed rooms. Note that SHTM-08-01 has a higher performance requirement of 42dB DnTw for partitions separating “Children and older people (multi bed)” rooms. Clarity for maternity wards required.	B

Drawing Reference	Rev	Drawing Title	Comment	Drawing Status
HLM-Z2-00-PL-252-001	02	GROUND FLOOR INTERNAL WALL TYPES AND SETTING OUT SHEET 1	While a 52dB DnTw wall is shown between the Workshop and Plaster Suite, the other partitions around the workshop are shown with no minimum performance which leaves the potential for noise break-out. It is assumed that if no minimum performance is shown, there would not be attention paid to acoustic sealing of junctions, penetrations etc leaving the potential for flanking noise Partition Specific comments: G-K1-017Drop-in multi-purpose room and G-K1-016 Drop-in Lounge/Beverage Bay - 42 Dnt,w (47 Rw). G-K1-017Drop-in multi-purpose room andG-K1-028 Corridor - Increase the acoustic performance rating of G-K1-017 to 42 Dnt,w (47 Rw). G-K1-017Drop-in multi-purpose room and G-K1-030 Corridor - 37 Dnt,w (42 Rw). G-D1-021 Child Protection Room and G-COR-010 Atrium - 47 Dnt,w (52 Rw).	B
HLM-SZ-01-PL-252-003	02	FIRST FLOOR INTERNAL WALL TYPES AND SETTING OUT SHEET 3	Generally there is an inconsistent approach to office partitions – many though not all are not provided with a minimum acoustic performance. Although not clinical spaces, minimum performance criteria for office partitions are provided in SHTM-08-01. Latest revision shows improvements but still concern over a number of rooms.	B

Drawing Reference	Rev	Drawing Title	Comment	Drawing Status
HLM-Z2-02-PL-252-001	02	SECOND FLOOR INTERNAL WALL TYPES AND SETTING OUT SHEET 1	Generally there is an inconsistent approach to office partitions – many though not all are not provided with a minimum acoustic performance. Although not clinical spaces, minimum performance criteria for office partitions are provided in SHTM-08-01. Latest revision shows improvements but still concern over a number of rooms.	B
HLM-SZ-02-PL-252-003	02	SECOND FLOOR INTERNAL WALL TYPES AND SETTING OUT SHEET 3	No comment.	A
HLM-SZ-03-PL-252-002	02	THIRD FLOOR INTERNAL WALL TYPES AND SETTING OUT SHEET 2	Partitions separating multi-bed rooms have been specified with Dntw 37dB in line with general hospital multi-bed rooms. Note that SHTM-08-01 has a higher performance requirement of 42dB DnTw for partitions separating "Children and older people (multi bed)" rooms Partition Specific comments: 3-C1.1-011 4 Bed room and 3-C1.2-013 4 Bed Rooms - 42 Dnt,w (47 Rw) 3-C1.8-016/027 4 Bed Rooms and 3-C1.3-016 4 Bed Rooms - 42 Dnt,w (47 Rw)	B
HLM-SZ-04-PL-252-003	02	FOURTH FLOOR INTERNAL WALL TYPES AND SETTING OUT SHEET 3	No comments	A
HLM-SZ-B1-PL-252-002	02	BASEMENT INTERNAL WALL TYPES AND SETTING OUT SHEET 2	There is inconsistency in mark-up of the ancillary spaces – see above and specific comments below. Latest revision shows improvements but still concern over a number of rooms.	B

Drawing Reference	Rev	Drawing Title	Comment	Drawing Status
HLM-Z5-SL-PL-252-001		ENERGY CENTRE INTERNAL WALL TYPES AND SETTING OUT	No comment	A
HLM-SZ-XX-DT-251-001	02	TYPICAL INTERFACE DETAILS - INSULATED RENDER	No comment	A
HLM-SZ-XX-DT-251-002	02	TYPICAL INTERFACE DETAILS - ZINC CLADDING	No comment	A
HLM-SZ-XX-DT-251-003	02	TYPICAL INTERFACE DETAILS - FACING BRICK	No comment	A
HLM-SZ-XX-DT-251-005	02	TYPICAL INTERFACE DETAILS - ACM RAINSCREEN CLADDING	No comment	A
HLM-SZ-XX-DT-251-006	03	TYPICAL INTERFACE DETAILS - REGLIT GLASS	No comment	A
HLM-SZ-XX-DT-251-007	03	TYPICAL INTERFACE DETAILS - CURTAIN WALLING	No comment	A
HLM-SZ-XX-DT-251-008	02	TYPICAL INTERFACE DETAILS - KINGSPAN CLADDING	No comment	A
HLM-SZ-XX-DT-251-010	02	TYPICAL INTERFACE DETAILS - PARAPET WALLS	Confirm insulated render finish sufficiently robust for inside face of accessible roof areas, i.e. at Classrooms, Restaurant etc.	B
HLM-SZ-XX-DT-251-011	02	TYPICAL INTERFACE DETAILS - LOUVRES	No comment	A
HLM-Z4-SL-EL-251-003	02	TYPICAL CLADDING - SOUTH WEST GABLE	No comment	A
HLM-Z4-SL-DT-251-001	02	TYPICAL INTERFACE DETAIL TO RIE LINK BUILDING	No comment in principle but subject to further development with Consort and submission as part of RDD.	B
HLM-Z1-SL-EL-251-001	02	MAIN ENTRANCE SCREEN AND LOBBY - WEST ELEVATION	No comment	A
HLM-Z1-SL-EL-251-002	02	DCN ENTRANCE SCREEN AND LOBBY - EAST ELEVATION	No comment	A
HLM-SZ-SL-SK-251-101	01	SOFT SPACE STRATEGY	No comment	A
HLM-SZ-SL-SK-251-102	02	PHYSICAL ADAPTABILITY	No comment	A
HLM-SZ-SL-DT-321-001	02	TYPICAL INTERNAL SCREEN TYPES	No comment	A

Drawing Reference	Rev	Drawing Title	Comment	Drawing Status
HLM-SZ-02-PL-322-001	02	SECOND FLOOR INTERNAL DOORS AND SCREENS	Room 02-M3-001 to be type 1d.	B
HLM-SZ-04-PL-322-001	02	FOURTH FLOOR INTERNAL DOORS AND SCREENS	Room No 04-C5-004 to be Type 2b 04-S9-005 to be Type 1a	B
HLM-SZ-B1-PL-322-001	02	BASEMENT INTERNAL DOORS AND SCREENS	Door in corridor B-COR-004 to 006 to have vision panels	B
HLM-SZ-00-PL-330-002	02	GROUND FLOOR EMOTIONAL MAPPING KEY	No comment.	A
HLM-SZ-01-PL-330-002	02	FIRST FLOOR EMOTIONAL MAPPING KEY	No comment.	A
HLM-SZ-02-PL-330-002	02	SECOND FLOOR EMOTIONAL MAPPING KEY	No comment.	A
HLM-SZ-03-PL-330-002	02	THIRD FLOOR EMOTIONAL MAPPING KEY	No comment.	A
HLM-SZ-04-PL-330-002	02	FOURTH FLOOR EMOTIONAL MAPPING KEY	No comment	A
HLM-SZ-SL-SK-330-001	02	EMOTIONAL MAPPING KEY - VIBRANT	No comment	A
HLM-SZ-SL-SK-330-002	02	EMOTIONAL MAPPING KEY - HOMELY	No comment	A
HLM-SZ-SL-SK-330-003	02	EMOTIONAL MAPPING KEY - RELAXING	No comment	A
HLM-SZ-SL-SK-330-004	02	EMOTIONAL MAPPING KEY - STANDARD	No comment.	A
HLM-SZ-XX-IM-330-101 (100)	02	INTERNAL PERSPECTIVES SHEET 1	No comment	A
HLM-SZ-XX-IM-330-102 (101)	02	INTERNAL PERSPECTIVES SHEET 2	No comment	A
HLM-SZ-XX-IM-330-103 (102)	02	INTERNAL PERSPECTIVES SHEET 3	No comment	A
HLM-SZ-XX-IM-330-104 (103)	02	INTERNAL PERSPECTIVES SHEET 4	No comment	A
Ceilings		**All Isolation Rooms & Lobbies to be Type D1**		

Drawing Reference	Rev	Drawing Title	Comment	Drawing Status
HLM-Z2-02-PL-332-001	02	SECOND FLOOR CEILING LAYOUT SHEET 1	No comment	A
HLM-SZ-04-PL-332-003	02	FOURTH FLOOR CEILING LAYOUT SHEET 3	No comment	A
HLM-SZ-B1-PL-332-001	02	BASEMENT CEILING LAYOUT SHEET 1	Room No B1-S3-004 – Type D2	B
HLM-SZ-B1-PL-332-002	02	BASEMENT CEILING LAYOUT SHEET 2	No comment	A
HLM-SZ-SL-DT-332-001	01	TYPICAL CEILING DETAILS SHEET 1	No comment	A
HLM-SZ-00-PL-450-001	04	GROUND FLOOR FM MOVEMENT STRATEGY	With the exception of ongoing lift discussion – no comment	B
HLM-SZ-01-PL-450-001	04	FIRST FLOOR FM MOVEMENT STRATEGY	With the exception of ongoing lift discussion – no comment	B
HLM-SZ-02-PL-450-001	04	SECOND FLOOR FM MOVEMENT STRATEGY	With the exception of ongoing lift discussion – no comment	B
HLM-SZ-03-PL-450-001	04	THIRD FLOOR FM MOVEMENT STRATEGY	With the exception of ongoing lift discussion – no comment	B
HLM-SZ-04-PL-450-001	03	FOURTH FLOOR FM MOVEMENT STRATEGY	With exception of ongoing lift discussion – only issue is unnamed room at end of green flow at restaurant. Also unlikely food will come up in DCN core loft- more likely to be RHSC core.	B
HLM-SZ-B1-PL-450-001	03	BASEMENT FM MOVEMENT STRATEGY	With the exception of ongoing lift discussion – no comment	B
HLM-SZ-01-PL-450-002	05	FIRST FLOOR ACCESS & MAINTENANCE STRATEGY	Confirm large and small cherry picker can fit into FM Lift 005 and rooms identified as access routes to balconies.	B
HLM-SZ-02-PL-450-002	03	SECOND FLOOR ACCESS & MAINTENANCE STRATEGY	Confirm large and small cherry picker can fit into FM Lift 005 and rooms identified as access routes to balconies.	B
HLM-SZ-03-PL-450-002	03	THIRD FLOOR ACCESS & MAINTENANCE STRATEGY	Confirm large and small cherry picker can fit into FM Lift 005 and rooms identified as access routes to balconies.	B
HLM-SZ-04-PL-450-002	03	FOURTH FLOOR ACCESS & MAINTENANCE STRATEGY	Confirm large and small cherry picker can fit into FM Lift 005 and rooms identified as access routes to balconies.	B

Drawing Reference	Rev	Drawing Title	Comment	Drawing Status
HLM-SZ-B1-PL-450-002	02	BASEMENT ACCESS & MAINTENANCE STRATEGY	Confirm large and small cherry picker can fit into FM Lift 005 and rooms identified as access routes to balconies. Amend key to exclude CT/MRI Scanners.	B
HLM-SZ-00-PL-410-002	02	GROUND FLOOR SIGNAGE LAYOUT	No comment	A
HLM-SZ-01-PL-410-002	02	FIRST FLOOR SIGNAGE LAYOUT	No comment	A
HLM-SZ-02-PL-410-002	02	SECOND FLOOR SIGNAGE LAYOUT	No comment	A
HLM-SZ-03-PL-410-002	02	THIRD FLOOR SIGNAGE LAYOUT	No comment	A
HLM-SZ-04-PL-410-002	02	FOURTH FLOOR SIGNAGE LAYOUT	No comment	A
HLM-SZ-B1-PL-410-002	02	BASEMENT SIGNAGE LAYOUT	No comment	A
HLM-SZ-SL-EL-410-100	02	RHSC SIGNAGE TYPES	No comment	A
HLM-SZ-SL-EL-410-101	02	DCN SIGNAGE TYPES	No comment	A
HLM-SZ-SL-SK-401-004	01	TYPICAL STAFF BASE DESK DETAILS	Acrylic stone to be specified for staff base desks.	B
HLM-SZ-00-PL-450-003	02	GROUND FLOOR CLINICAL REQUIREMENTS AND INFECTION CONTROL	Highlight hand hygiene sinks in Isolation Room, Dental Suite.	B
HLM-SZ-01-PL-450-003	02	FIRST FLOOR CLINICAL REQUIREMENTS INFECTION CONTROL	Colour coding of basin corridor 1-P1-019 outside Pantry 1-P1-016. Infection Control to advice on basin in OPD (Audio/Optic).	B
HLM-SZ-02-PL-450-003	02	SECOND FLOOR CLINICAL REQUIREMENTS INFECTION CONTROL	No comment	A
HLM-SZ-03-PL-450-003	02	THIRD FLOOR CLINICAL REQUIREMENTS INFECTION CONTROL	Highlight clinical basin at entrance by Reception Room No 3-C1.2-036. Highlight hand hygiene sinks in Isolation Room 03-C1.3-008.	B
HLM-SZ-04-PL-450-003	02	FOURTH FLOOR CLINICAL REQUIREMENTS INFECTION CONTROL	No comment	A
HLM-SZ-B1-PL-450-003	02	BASEMENT CLINICAL REQUIREMENTS INFECTION CONTROL	No comment	A

Drawing Reference	Rev	Drawing Title	Comment	Drawing Status
HLM-SZ-00-PL-572-002	03	GROUND FLOOR FIRE STRATEGY GENERAL ARRANGEMENT	Fire strategy drawings should be updated to included design changes as a result of changes to derogations requested prior to financial close these include: • Designation of refuge areas in escape stairs • Confirmation of provision of fire compartmentation as outlined in the fire strategy. • Confirmation of smoke control in the atrium	B
HLM-SZ-01-PL-572-003	03	FIRST FLOOR FIRE STRATEGY GENERAL ARRANGEMENT	Fire strategy drawings should be updated to included design changes as a result of changes to derogations requested prior to financial close these include: • Designationof refuge areas in escape stairs • Confirmation of provision of fire compartmentation as outlined in the fire strategy. • Confirmation of smoke control in the atrium	B
HLM-SZ-02-PL-572-004	03	SECOND FLOOR FIRE STRATEGY GENERAL ARRANGEMENT	Fire strategy drawings should be updated to included design changes as a result of changes to derogations requested prior to financial close these include: • Designationof refuge areas in escape stairs • Confirmation of provision of fire compartmentation as outlined in the fire strategy. • Confirmation of smoke control in the atrium	B

Drawing Reference	Rev	Drawing Title	Comment	Drawing Status
HLM-SZ-03-PL-572-006	03	THIRD FLOOR FIRE STRATEGY GENERAL ARRANGEMENT	Fire strategy drawings should be updated to included design changes as a result of changes to derogations requested prior to financial close these include: • Designationof refuge areas in escape stairs • Confirmation of provision of fire compartmentation as outlined in the fire strategy. • Confirmation of smoke control in the atrium	B
HLM-SZ-04-PL-572-007	03	FOURTH FLOOR FIRE STRATEGY GENERAL ARRANGEMENT	Fire strategy drawings should be updated to included design changes as a result of changes to derogations requested prior to financial close these include: • Designationof refuge areas in escape stairs • Confirmation of provision of fire compartmentation as outlined in the fire strategy. Confirmation of smoke control in the atrium	B
HLM-SZ-B1-PL-572-001	03	BASEMENT FIRE STRATEGY GENERAL ARRANGEMENT	Fire strategy drawings should be updated to included design changes as a result of changes to derogations requested prior to financial close these include: • Designation of refuge areas in escape stairs • Confirmation of provision of fire compartmentation as outlined in the fire strategy. Confirmation of smoke control in the atrium	B

Drawing Reference	Rev	Drawing Title	Comment	Drawing Status
HLM-Z0-00-PL-572-001	03	PROPOSED SITE PLAN - FIRE ACCESS PLAN	Fire strategy drawings should be updated to included design changes as a result of changes to derogations requested prior to financial close these include: • Designation of refuge areas in escape stairs • Confirmation of provision of fire compartmentation as outlined in the fire strategy. Confirmation of smoke control in the atrium	B
HLM-Z2-00-PL-400-401	02	GROUND FLOOR EQUIPMENT LAYOUT SHEET 00-401	See comments on drawings	B
HLM-Z2-00-PL-400-403	04	GROUND FLOOR EQUIPMENT LAYOUT SHEET 00-403	See comments on drawings	B
HLM-Z2-00-PL-400-404	03	GROUND FLOOR EQUIPMENT LAYOUT SHEET 00-404	No comment	A
HLM-Z2-00-PL-400-405	03	GROUND FLOOR EQUIPMENT LAYOUT SHEET 00-405	See comments on drawings	B
HLM-Z2-00-PL-400-406	02	GROUND FLOOR EQUIPMENT LAYOUT SHEET 00-406	No comment	A
HLM-Z2-00-PL-400-421	03	GROUND FLOOR EQUIPMENT LAYOUT SHEET 00-421	No comment	A
HLM-Z2-01-PL-400-401	03	FIRST FLOOR EQUIPMENT LAYOUT SHEET 01-401	No comment	A
HLM-Z2-01-PL-400-402	02	FIRST FLOOR EQUIPMENT LAYOUT SHEET 01-402	No comment	A
HLM-Z2-01-PL-400-403	03	FIRST FLOOR EQUIPMENT LAYOUT SHEET 01-403	No comment	A
HLM-Z2-01-PL-400-405	03	FIRST FLOOR EQUIPMENT LAYOUT SHEET 01-405	See comments on drawings	B
HLM-Z2-01-PL-400-406	03	FIRST FLOOR EQUIPMENT LAYOUT SHEET 01-406	See comments on drawings	B

Drawing Reference	Rev	Drawing Title	Comment	Drawing Status
HLM-Z2-01-PL-400-407	03	FIRST FLOOR EQUIPMENT LAYOUT SHEET 01-407	See comments on drawings	B
HLM-Z2-01-PL-400-408	02	FIRST FLOOR EQUIPMENT LAYOUT SHEET 01-408	See comments on drawings	B
HLM-Z2-02-PL-400-401	03	SECOND FLOOR EQUIPMENT LAYOUT SHEET 02-401	No comment	A
HLM-Z2-02-PL-400-402	03	SECOND FLOOR EQUIPMENT LAYOUT SHEET 02-402	No comment	A
HLM-Z2-02-PL-400-403	03	SECOND FLOOR EQUIPMENT LAYOUT SHEET 02-403	No comment	A
HLM-Z2-03-PL-400-401	03	THIRD FLOOR EQUIPMENT LAYOUT SHEET 03-401	No comment	A
HLM-Z2-03-PL-400-402	03	THIRD FLOOR EQUIPMENT LAYOUT SHEET 03-402	See comments on drawings	B
HLM-Z2-03-PL-400-403	03	THIRD FLOOR EQUIPMENT LAYOUT SHEET 03-403	No comment	A
HLM-Z2-03-PL-400-404	03	THIRD FLOOR EQUIPMENT LAYOUT SHEET 03-404	See comments on drawings	B
HLM-Z3-03-PL-400-405	03	THIRD FLOOR EQUIPMENT LAYOUT SHEET 03-405	No comment	A
HLM-Z3-00-AS-400-001		IT NODE ROOM G-T1-003	No comment	A
HLM-Z3-00-PL-400-407	04	GROUND FLOOR EQUIPMENT LAYOUT SHEET 00-407	See comments on drawings	B
HLM-Z3-00-PL-400-408	04	GROUND FLOOR EQUIPMENT LAYOUT SHEET 00-408	See comments on drawings	B
HLM-Z3-00-PL-400-409	03	GROUND FLOOR EQUIPMENT LAYOUT SHEET 00-409	See comments on drawings	B
HLM-Z3-00-PL-400-419	03	GROUND FLOOR EQUIPMENT LAYOUT SHEET 00-419	No comment	A
HLM-Z3-01-PL-400-409	04	FIRST FLOOR EQUIPMENT LAYOUT SHEET 01-409	See comments on drawings	B

Drawing Reference	Rev	Drawing Title	Comment	Drawing Status
HLM-Z3-01-PL-400-410	04	FIRST FLOOR EQUIPMENT LAYOUT SHEET 01-410	See comments on drawings	B
HLM-Z3-01-PL-400-411	04	FIRST FLOOR EQUIPMENT LAYOUT SHEET 01-411	See comments on drawings	B
HLM-Z3-01-PL-400-412	04	FIRST FLOOR EQUIPMENT LAYOUT SHEET 01-412	See comments on drawings	B
HLM-Z3-01-PL-400-413	04	FIRST FLOOR EQUIPMENT LAYOUT SHEET 01-413	See comments on drawings	B
HLM-Z3-02-PL-400-404	03	SECOND FLOOR EQUIPMENT LAYOUT SHEET 02-404	No comment	A
HLM-Z3-02-PL-400-405	03	SECOND FLOOR EQUIPMENT LAYOUT SHEET 02-405	No comment	A
HLM-Z3-03-PL-400-407	03	THIRD FLOOR EQUIPMENT LAYOUT SHEET 03-407	See comments on drawings	B
HLM-Z3-03-PL-400-408	04	THIRD FLOOR EQUIPMENT LAYOUT SHEET 03-408	No comment	A
HLM-Z3-03-PL-400-409	03	THIRD FLOOR EQUIPMENT LAYOUT SHEET 03-409	See comments on drawings	B
HLM-Z3-03-PL-400-410	04	THIRD FLOOR EQUIPMENT LAYOUT SHEET 03-410	No comment	A
HLM-Z3-04-PL-400-401	02	FOURTH FLOOR EQUIPMENT LAYOUT SHEET 04-401	No comment	A
HLM-Z3-04-PL-400-402	06	FOURTH FLOOR EQUIPMENT LAYOUT SHEET 04-402	See comments on drawings	B
HLM-Z3-B1-PL-400-405	02	BASEMENT FLOOR EQUIPMENT LAYOUT SHEET B1-405	See comments on drawings	B
HLM-Z4-00-PL-400-410	03	GROUND FLOOR EQUIPMENT LAYOUT SHEET 00-410	No comment	A
HLM-Z4-00-PL-400-411	06	GROUND FLOOR EQUIPMENT LAYOUT SHEET 00-411	No comment	A
HLM-Z4-00-PL-400-412	04	GROUND FLOOR EQUIPMENT LAYOUT SHEET 00-412	See comments on drawings	B

Drawing Reference	Rev	Drawing Title	Comment	Drawing Status
HLM-Z4-00-PL-400-414	03	GROUND FLOOR EQUIPMENT LAYOUT SHEET 00-414	See comments on drawings	B
HLM-Z4-00-PL-400-415	02	GROUND FLOOR EQUIPMENT LAYOUT SHEET 00-415	No comment	A
HLM-Z4-00-PL-400-416	03	GROUND FLOOR EQUIPMENT LAYOUT SHEET 00-416	No comment	A
HLM-Z4-00-PL-400-417	03	GROUND FLOOR EQUIPMENT LAYOUT SHEET 00-417	See comments on drawings	B
HLM-Z4-00-PL-400-418	03	GROUND FLOOR EQUIPMENT LAYOUT SHEET 00-418	No comment	A
HLM-Z4-01-PL-400-414	03	FIRST FLOOR EQUIPMENT LAYOUT SHEET 01-414	No comment	A
HLM-Z4-01-PL-400-415	03	FIRST FLOOR EQUIPMENT LAYOUT SHEET 01-415	See comments on drawings	B
HLM-Z4-01-PL-400-416	03	FIRST FLOOR EQUIPMENT LAYOUT SHEET 01-416	No comment	A
HLM-Z4-01-PL-400-417	03	FIRST FLOOR EQUIPMENT LAYOUT SHEET 01-417	See comments on drawings	B
HLM-Z4-01-PL-400-418	03	FIRST FLOOR EQUIPMENT LAYOUT SHEET 01-418	See comments on drawings	B
HLM-Z4-01-PL-400-419	03	FIRST FLOOR EQUIPMENT LAYOUT SHEET 01-419	See comments on drawings	B
HLM-Z4-01-PL-400-420	02	FIRST FLOOR EQUIPMENT LAYOUT SHEET 01-420	No comment	A
HLM-Z4-02-PL-400-406	03	SECOND FLOOR EQUIPMENT LAYOUT SHEET 02-406	No comment	A
HLM-Z4-02-PL-400-407	03	SECOND FLOOR EQUIPMENT LAYOUT SHEET 02-407	See comments on drawings	B
HLM-Z4-02-PL-400-408	03	SECOND FLOOR EQUIPMENT LAYOUT SHEET 02-408	See comments on drawings	B
HLM-Z4-02-PL-400-409	03	SECOND FLOOR EQUIPMENT LAYOUT SHEET 02-409	No comment	A

Drawing Reference	Rev	Drawing Title	Comment	Drawing Status
HLM-Z4-02-PL-400-410	03	SECOND FLOOR EQUIPMENT LAYOUT SHEET 02-410	No comment	A
HLM-Z4-02-PL-400-412	01	SECOND FLOOR EQUIPMENT LAYOUT SHEET 02-412	No comment	A
HLM-Z4-02-PL-400-413	03	SECOND FLOOR EQUIPMENT LAYOUT SHEET 02-413	See comments on drawings	B
HLM-Z4-03-PL-400-411	03	THIRD FLOOR EQUIPMENT LAYOUT SHEET 03-411	See comments on drawings	B
HLM-Z4-03-PL-400-412	03	THIRD FLOOR EQUIPMENT LAYOUT SHEET 03-412	See comments on drawings	B
HLM-Z4-03-PL-400-413	03	THIRD FLOOR EQUIPMENT LAYOUT SHEET 03-413	See comments on drawings	B
HLM-Z4-03-PL-400-414	03	THIRD FLOOR EQUIPMENT LAYOUT SHEET 03-414	See comments on drawings	B
HLM-Z4-03-PL-400-415	03	THIRD FLOOR EQUIPMENT LAYOUT SHEET 03-415	See comments on drawings	B
HLM-Z4-03-PL-400-416	03	THIRD FLOOR EQUIPMENT LAYOUT SHEET 03-416	No comment	A
HLM-Z4-03-PL-400-417	03	THIRD FLOOR EQUIPMENT LAYOUT SHEET 03-417	See comments on drawings	B
HLM-Z4-03-PL-400-418	03	THIRD FLOOR EQUIPMENT LAYOUT SHEET 03-418	See comments on drawings	B
HLM-Z4-04-PL-400-403	05	FOURTH FLOOR EQUIPMENT LAYOUT SHEET 04-403	No comment	A
HLM-Z4-04-PL-400-404	03	FOURTH FLOOR EQUIPMENT LAYOUT SHEET 04-404	No comment	A
HLM-Z4-04-PL-400-405	02	FOURTH FLOOR EQUIPMENT LAYOUT SHEET 04-405	No comment	A
HLM-Z4-04-PL-400-406	04	FOURTH FLOOR EQUIPMENT LAYOUT SHEET 04-406	See comments on drawings	B
HLM-Z4-B1-PL-400-401	03	BASEMENT FLOOR EQUIPMENT LAYOUT SHEET B1-401	See comments on drawings	B

Drawing Reference	Rev	Drawing Title	Comment	Drawing Status
HLM-Z4-B1-PL-400-403	03	BASEMENT FLOOR EQUIPMENT LAYOUT SHEET B1-403	See comments on drawings	A
HLM-Z4-B1-PL-400-404	03	BASEMENT FLOOR EQUIPMENT LAYOUT SHEET B1-404	See comments on drawings	B
HLM-Z4-B1-PL-400-406	03	BASEMENT FLOOR EQUIPMENT LAYOUT SHEET B1-406	No comment	A
HLM-XX-XX-EL-400-001	01	TYPICAL EQUIPMENT MOUNTING HEIGHTS	The Board wishes the basin heights in Accessible toilets to be set in accordance with HBN 00-02	B
HLM-SZ-00-PL-700-003	03	Existing Siteplan	No comment	A
HLM-Z0-00-PL-700-010	03	Rendered Siteplan	No comment	A
HLM-Z0-00-PL-700-011	03	Rendered Plan - Hospital Square	No comment	A
HLM-Z0-00-PL-700-012	03	Rendered Plan - Entrance Plaza	No comment	A
HLM-Z0-00-PL-700-013	03	Rendered Plan - Emergency Dept & Service Yard	No comment beyond current review of canopy provision at ambulance and RIE ED Ambulant Entrance	B
HLM-Z0-00-PL-700-020	11	Landscape Siteplan	No comment	A
HLM-Z0-00-PL-700-021	03	Landscape GA - Hospital Square	No comment	A
HLM-Z0-00-PL-700-022	03	Landscape GA - Entrance Plaza	No comment	A
HLM-Z0-00-PL-700-023	07	Landscape GA - Emergency Dept & Service Yard	No comment	A
HLM-Z0-00-PL-711-001	03	Proposed Hard Landscape - Hospital Square	No comment	A
HLM-Z0-00-PL-711-002	03	Proposed Hard Landscape - Entrance Plaza	No comment	A
HLM-Z0-00-PL-711-003	04	Proposed Hard Landscape - Emergency Dept & Service Yard	No comment	A
HLM-Z0-00-PL-712-001	03	Proposed Soft Landscape - Hospital Square	No comment	A
HLM-Z0-00-PL-712-002	02	Proposed Soft Landscape - Entrance Plaza	No comment	A
HLM-Z0-00-PL-712-003	03	Proposed Soft Landscape - Emergency Dept & Service Yard	No comment	A
HLM-Z0-XX-SE-700-001	01	Landscape Sections - Hospital Square	No comment	A

Drawing Reference	Rev	Drawing Title	Comment	Drawing Status
HLM-Z0-XX-SE-700-002	01	Landscape Sections - Entrance Plaza	No comment	A
HLM-Z0-XX-SE-700-003	01	Landscape Sections - Emergency Dept & Service Yard	No comment	A
HLM-Z0-XX-SE-700-010		Detail Landscape Sections - Entrance Plaza Sheet 1 Of 7	No comment	A
HLM-Z0-XX-SE-700-011		Detail Landscape Sections - Entrance Plaza Sheet 2 Of 7	No comment	A
HLM-Z0-XX-SE-700-012		Detail Landscape Sections - Entrance Plaza Sheet 3 Of 7	No comment	A
HLM-Z0-XX-SE-700-013		Detail Landscape Sections - Entrance Plaza Sheet 4 Of 7	No comment	A
HLM-Z0-XX-SE-700-014		Detail Landscape Sections - Entrance Plaza Sheet 5 Of 7	No comment	A
HLM-Z0-XX-SE-700-015		Detail Landscape Sections - Entrance Plaza Sheet 6 Of 7	No comment	A
HLM-Z0-XX-SE-700-016		Detail Landscape Sections - Entrance Plaza Sheet 7 Of 7	No comment	A
HLM-Z0-XX-SE-700-020		Detail Landscape Sections - Set Down - Pick Up Zone Sheet 1 Of 2	No comment	A
HLM-Z0-XX-SE-700-021		Detail Landscape Sections - Set Down - Pick Up Zone Sheet 2 Of 2	No comment	A
HLM-Z0-XX-SE-700-030	02	Detail Landscape Sections - Hospital Square Sheet 1 Of 6	No comment	A
HLM-Z0-XX-SE-700-031	02	Detail Landscape Sections - Hospital Square Sheet 2 Of 6	No comment	A
HLM-Z0-XX-SE-700-032	02	Detail Landscape Sections - Hospital Square Sheet 3 Of 6	No comment	A
HLM-Z0-XX-SE-700-033	02	Detail Landscape Sections - Hospital Square Sheet 4 Of 6	No comment	A

Drawing Reference	Rev	Drawing Title	Comment	Drawing Status
HLM-Z0-XX-SE-700-034	02	Detail Landscape Sections - Hospital Square Sheet 5 Of 6	No comment	A
HLM-Z0-XX-SE-700-035	02	Detail Landscape Sections - Hospital Square Sheet 6 Of 6	No comment	A
HLM-Z0-XX-SE-700-040	02	Detail Landscape Sections - Emergency Department Sheet 1 Of 3	No comment	A
HLM-Z0-XX-SE-700-041	02	Detail Landscape Sections - Emergency Department Sheet 2 Of 3	No comment	A
HLM-Z0-XX-SE-700-042	02	Detail Landscape Sections - Emergency Department Sheet 3 Of 3	Section A-A - Is 12, the hedge	A
HLM-Z0-XX-SE-700-050	02	Detail Landscape Sections - Cycle Path Sheet 1 of 6	Sections 01 & 02 – Is 12, the hedge and post and wire fence?	A
HLM-Z0-XX-SE-700-051	02	Detail Landscape Sections - Cycle Path Sheet 2 of 6	Sections 03 & 04 – Is 12, the hedge and post and wire fence?	A
HLM-Z0-XX-SE-700-052	02	Detail Landscape Sections - Cycle Path Sheet 3 of 6	Sections 05 & 06 – Is 12, the hedge and post and wire fence?	A
HLM-Z0-XX-SE-700-053	02	Detail Landscape Sections - Cycle Path Sheet 4 of 6	Sections 07 & 08 – Is 12, the hedge and post and wire fence?	A
HLM-Z0-XX-SE-700-054	02	Detail Landscape Sections - Cycle Path Sheet 5 of 6	Section 09 – Is 12, the hedge and post and wire fence?	A
HLM-Z0-XX-SE-700-055	02	Detail Landscape Sections - Cycle Path Sheet 6 of 6	No comment	A
HLM-Z0-XX-SE-700-060	02	Detail Landscape Sections - Service Yard Sheet 1 of 6	No comment	A
HLM-Z0-XX-SE-700-061	02	Detail Landscape Sections - Service Yard Sheet 2 of 6	No comment	A
HLM-Z0-XX-SE-700-062	02	Detail Landscape Sections - Service Yard Sheet 3 of 6	No comment	A
HLM-Z0-XX-SE-700-063	02	Detail Landscape Sections - Service Yard Sheet 4 of 6	No comment	A
HLM-Z0-XX-SE-700-064	02	Detail Landscape Sections - Service Yard Sheet 5 of 6	No comment	A

Drawing Reference	Rev	Drawing Title	Comment	Drawing Status
HLM-Z0-XX-SE-700-065	02	Detail Landscape Sections - Service Yard Sheet 6 of 6	No comment	A
HLM-SZ-SL-DT-332-001	01	Typical Ceiling Details Sheet 1	No comment	A
CDS-Z1-B1-PL-430-105	05	Basement Kitchen Area GA	As it stands there is no door space between rooms B-S1-017 and B-S1-031 – this would need to be a double door – a sliding door but double would be acceptable. The door space between B-S1-013 and B-S1-017 is a single size door – this is not sufficient space to get the trolley from the returned trolley space into the clean trolley space.	B
CDS-Z1-B1-PL-430-106	06	Basement Kitchen Area Services Layout	As it stands there is no door space between rooms B-S1-017 and B-S1-031 – this would need to be a double door – a sliding door but double would be acceptable. The door space between B-S1-013 and B-S1-017 is a single size door – this is not sufficient space to get the trolley from the returned trolley space into the clean trolley space.	B
CDS-Z1-B1-PL-430-119	00	Basement Kitchen Area Kitchen Elevations	No comment	A
CDS-Z3-03-PL-430-016	07	Ward Kitchen 3-C1.3-034	No comment	A
CDS-Z3-03-PL-430-117	07	Ward Kitchen 3-C1.4-064	No comment	A
CDS-Z4-00-PL-430-109	07	Ward Kitchen G-A2-041	No comment	A
CDS-Z4-00-PL-430-110	08	Ward Kitchen G-F1-039	No comment	A
CDS-Z4-01-PL-430-111	07	Ward Kitchen 1-L1-054	No comment	A
CDS-Z4-02-PL-430-112	07	Ward Kitchen 2-L2-062	No comment	A
CDS-Z4-02-PL-430-113	08	Ward Kitchen 2-L2-078	No comment	A
CDS-Z4-03-PL-430-114	07	Ward Kitchen 3-C1.1-023	No comment	A
CDS-Z4-03-PL-430-115	07	Ward Kitchen 3-C1.2-034	No comment	A
CDS-Z4-03-PL-430-118	07	Ward Kitchen 3-C1.8-010	No comment	A
CDS-Z4-04-PL-430-101	03	Restaurant to 4th Floor	No comment	A

Drawing Reference	Rev	Drawing Title	Comment	Drawing Status
CDS-Z4-04-PL-430-102	05	Restaurant to 4th Floor Services Layout	No comment	A
HLM – AA-00-PL-0005-091	FT	Drop in Centre Garden & OPD Play	No comment	A
HLM – BN-02-PL-0005-291	FT	Street Courtyard 1	No comment	A
HLM – BN-02-PL-0005-292	FT	Street Courtyard 2	No comment	A
HLM – BN-03-PL-0005-391	FT	Haematology/Oncology Terrace	No comment	A
HLM – BN-03-PL-0005-392	FT	Neuroscience Inpatient Terrace	No comment	A
HLM – BS-00-PL-0005-091	FT	Spiritual Courtyard	No comment	A
HLM – BS-00-PL-0005-092	FT	Staff Courtyard	No comment	A
HLM –BS-00-PL-0005-093	FT	PARU Courtyard	No comment	A
HLM – BS-00-PL-0005-094	FT	CAMHS Garden & Courtyards	No comment	A
HLM – BS-00-PL-0005-095	FT	Emergency Dept Covered Play	No comment	A
HLM – BS-00-PL-0005-096	FT	Emergency Department External Screened Garden	No comment	A
HLM – BS-01-PL-0005-191	FT	Courtyard Terrace	No comment	A
HLM – BS-01-PL-0005-192	FT	Emergency Dept Green Roof	No comment	A
HLM – BS-02-PL-0005-291	FT	Staff Terrace	No comment	A
HLM – BS-02-PL-0005-292	FT	DCN Balcony	No comment	A
HLM – BS-02-PL-0005-293	FT	Critical Care Green Roof	No comment	A
HLM – BS-03-PL-0005-391	03	MDCU Terrace	No comment	A
HLM – BS-03-PL-0005-392	03	Long Stay Surgical Terrace	No comment	A
HLM – BS-00-PL-0005-491	FT	Restaurant Terrace	No comment	A
HLM – BS-04-PL-0005-492	FT	Classroom Terrace	No comment	A
HLM – BS-04-PL-0005-493	FT	Seminar Terrace	No comment	A
HLM – BS-04-PL-0005-494	FT	Clinical Management Suite	No comment	A

Drawing Reference	Rev	Drawing Title	Comment	Drawing Status
WW-XX-XX-SC-523-001	2	CHILLED WATER PRIMARY SYSTEM SCHEMATIC	Schedule of plant and sizes to be developed in line with the design progression	B
WW-Z3-B1-PL-521-001	1	Zone Z3- Level B1 - Heating Plantrooms	Drawing shows a suitable level of information with relevant labelling and information, including sections and elevation drawings Schedule of plant and sizes to be developed in line with the design progression Pipework appears to block access to the cylinders and expansion vessels, however final arrangement and maintenance risk is Project Co's	B
WW-Z4-B1-PL-521-001	1	Zone Z4- Level B1 - Heating Plantrooms	Drawing shows a suitable level of information with relevant labelling and information, including sections and elevation drawings Schedule of plant and sizes to be developed in line with the design progression Pipework arrangement appears to block access to the front of cylinders and expansion vessels, however final arrangement and maintenance risk is Project Co's	B
WW-SZ-B1-PL-633-001	1	Level B1 - Cable Routing	To be developed in line with the design development. Cable schedules awaited	B
WW-SZ-00-PL-633-001	1	Level 00 - Cable Routing	To be developed in line with the design development. Cable schedules awaited	B
WW-SZ-01-PL-633-001	1	Level 01 - Cable Routing	To be developed in line with the design development. Cable schedules awaited	B
WW-SZ-02-PL-633-001	1	Level 02 - Cable Routing	To be developed in line with the design development. Cable schedules awaited	B
WW-SZ-03-PL-633-001	1	Level 03 - Cable Routing	To be developed in line with the	B

Drawing Reference	Rev	Drawing Title	Comment	Drawing Status
			design development. Cable schedules awaited	
WW-SZ-04-PL-633-001	1	Level 04 - Cable Routing	To be developed in line with the design development. Cable schedules awaited	B
WW-SZ-05-PL-633-001	1	Roof Level - PV Layout	To be developed in line with the design development. Cable schedules awaited	B
ME-SZ-B1-PL-556-001	5	Basement Floor Plan - Location of IT Node Rooms	No comments	A
ME-SZ-00-PL-556-001	5	Ground Floor Plan - Location of IT Node Rooms	No comments	A
ME-SZ-01-PL-556-001	5	First Floor Plan - Location of IT Node Rooms	No comments	A
ME-SZ-02-PL-556-001	5	Second Floor Plan - Location of IT Node Rooms	No comments	A
ME-SZ-03-PL-556-001	5	Third Floor Plan - Location of IT Node Rooms	No comments	A
ME-SZ-04-PL-556-001	5	Fourth Floor Plan - Location of IT Node Rooms	No comments	A
ME-XX-XX-SC-556-001	2	ICT Structured Cabling System Schematic	No comments	A
ME-SZ-B1-PL-556-100	2	Basement Floor Plan. IT Hub Room Detail Layouts	No comments	A
ME-SZ-00-PL-556-100	2	Ground Floor Plan. IT Hub Room Detail Layouts	No comments	A
ME-SZ-01-PL-556-100	2	First Floor Plan. IT Hub Room Detail Layouts	No comments	A
ME-SZ-02-PL-556-100	2	Second Floor Plan. IT Hub Room Detail Layouts	No comments	A
ME-SZ-03-PL-556-100	2	Third Floor Plan. IT Hub Room Detail Layouts	No comments	A
ME-SZ-04-PL-556-100	2	Fourth Floor Plan. IT Hub Room Detail Layouts	No comments	A
WW-EW-XX-PL-750-001	1	Proposed site plan Gas, MWS & Fire Main services layout	No comments	A
WW-EW-XX-PL-755-001	2	Proposed New Scottish Power Sub-Station & High Voltage Cable Route	No comments	A
RBG-SZ-SL-PL-770-101	05	Surface Water Underground Attenuation Systems	Point 1 - What hardstanding area is discharging to this attenuation tank?	B
RBG-SZ-SL-PL-770-102	01	Underground Surface Water SUDS Treatment Systems	No comment, apart from those mentioned elsewhere relating to	A

Drawing Reference	Rev	Drawing Title	Comment	Drawing Status
			surface water drainage / details.	
RBG-SZ-B1-DT-770-001	03	Basement Drainage Details Sheet 1	No Comment	A
RBG-SZ-00-DT-770-001	03	Drainage Details Sheet 1	Point 1 - Discrepancy between note 10 and benching requirements on details. Please clarify. Point 2 - Discrepancy between benching width dimensions from manhole/steps. Please clarify. Sewers For Scotland states 500mm. Point 3 - Should be Figure 16. Point 4 - Discrepancy between benching width dimensions from manhole/ladder. Please clarify. Point 5 - Sewers For Scotland states max depth of Manhole Type C = 1.5m	B
RBG-SZ-00-DT-770-002	03	Drainage Details Sheet 2	Point 1 - Most of the Slot and Channel Drains are bedded directly on the Cellular Storage Crates. Detail required to show how this would work. Point 2 - Overall depth of connection shown is approximately 650mm. This id to deep for some of the pipes this is shown connecting into on drawing RBG-SZ-00-779-100-REV06 (see notes on this drawing). Point 3 - Tank is attenuation only and not an attenuation/infiltration tank. Point 4 - Yard Gully and Inlet Gully have same reference.	B
RBG-SZ-00-DT-770-003	03	Drainage Details Sheet 3	Point 1 - No levels for Service Yard Petrol Interceptor on GA drawing. Point 2 - Oil interceptor incoming pipe level is 500mm below ground level. Therefore this standard detail would not apply. Point 3 - Discrepancy between pipe diameters on this drawing (200mm dia) and foul water layout plan (225mm dia). Point 4 - Depth to invert of the Rainwater Down Pipe Connection appears to be lower than the connection into the cellular storage	B

Drawing Reference	Rev	Drawing Title	Comment	Drawing Status
			shown on Drg RBGSZ-00-DT-770-002-REV3 - Drainage Details Sheet 2	
RBG-SZ-00-DT-770-004	03	Drainage Details Sheet 4	Point 2 - No Geotextile wrapping or other bedding and surround detail shown. This is a standard detail drawing and does not show the change in ground level or the correct depth for the attenuation tank. Point 3 - This should read 'and 0.9m in non vehicle areas' after 'less than 1.2. in vehicle areas' and before 'and for all road gully connections' Point 4 - This should be '900mm cover in non vehicle areas' and not '300mm in soft areas'.	B
RBG-SZ-00-DT-770-010	01	Scottish Water Sewer Diversion - Drainage Details	Discrepancy between benching width dimensions from manhole/steps. Please clarify. Sewers For Scotland states 500mm.	B
RBG-SZ-00-PL-770-210	01	Scottish Water Sewer Diversion - Drainage Plan	Manhole invert levels differ from invert levels shown on drawings RBG-SZ-00-PL-770-200/201/202	B

Part 2: Non-Approved RDD Items - Level C or Level D:

Project Co shall submit and the Board shall review the following Reviewable Design Data not approved at Financial Close given that such Reviewable Design Data only received a Level C or Level D at Financial Close, with such Project Co submission addressing the following Board comments in relation to such Reviewable Design Data. These comments shall be incorporated into each relevant drawing by Project Co, and the drawings shall be submitted by Project Co to the Board through Schedule Part 8 (Review Procedure).

If Project Co considers that the Board comments below on any of the items listed in this Part 2 amount to a Change, Project Co shall, before complying with the comments and resubmitting the Endorsed RDD, notify the Board of the same and, if it is agreed by the parties or determined pursuant to Schedule Part 20 (*Dispute Resolution Procedure*) that a Change would arise if the comments were complied with, the Board may, if it wishes, implement the Change and it shall be dealt with in accordance with Schedule Part 16 (*Change Protocol*).

Drawing Reference	Rev	Drawing Title	Comment	Drawing Status
HLM-Z5-SL-PL-220-001	06	ENERGY CENTRE GENERAL ARRANGEMENT - ALL LEVELS	In relation to the Service Yard, Project Co has not provided to the Board a comparable level of Design Data to that submitted for other areas of the Facilities. Consequently the Board's comments at this stage are not comprehensive and therefore the Board reserves the right to comment further when the detailed drawings are submitted by Project Co through the Review Procedure.	C
HLM-Z4-SL-DT-230-001	01	STAIR 1 PLANS AND SECTIONS	Gap between bottom rail of balustrade and stair tread needs to be reduced such that a 100mm sphere will not pass through. Second lower handrail required.	C
HLM-Z1-SL-DT-230-002	01	STAIR 2 PLANS AND SECTIONS	Gap between bottom rail of balustrade and stair tread needs to be reduced such that a 100mm sphere will not pass through. Second lower handrail required. Lift configuration FM-002/003 to be updated.	C
HLM-Z1-SL-DT-230-003	01	STAIR 3 PLANS AND SECTIONS	Gap between bottom rail of balustrade and stair tread needs to be reduced such that a 100mm sphere will not pass through. Second lower handrail required. Clouded areas under development to be completed	C

Drawing Reference	Rev	Drawing Title	Comment	Drawing Status
HLM-Z4-SL-DT-230-004	01	STAIR 4 PLANS AND SECTIONS	Escape only. Gap between bottom rail of balustrade and stair tread needs to be reduced such that a 100mm sphere will not pass through. Second lower handrail required.	C
HLM-Z2-SL-DT-230-005	01	STAIR 5 PLANS AND SECTIONS	Escape only. Gap between bottom rail of balustrade and stair tread needs to be reduced such that a 100mm sphere will not pass through. Second lower handrail required.	C
HLM-Z2-SL-DT-230-006	01	STAIR 6 PLANS AND SECTIONS	Escape only. Gap between bottom rail of balustrade and stair tread needs to be reduced such that a 100mm sphere will not pass through. Second lower handrail required.	C
HLM-Z2-SL-DT-230-007	01	STAIR 7 PLANS AND SECTIONS	Gap between bottom rail of balustrade and stair tread needs to be reduced such that a 100mm sphere will not pass through. Second lower handrail required.	C
HLM-Z1-SL-Dt-230-008	01	STAIR 8 PLANS AND SECTIONS	Confirm sound reduction measures to avoid “ringing” of steel stair structure. . Second lower handrail required.	C
HLM-SZ-SL-DT-230-001	01	TYPICAL BALUSTRADE DETAILS	Detail 5 – show skirting Balustrade height too low – increase to 1350mm	C
HLM-SZ-XX-DT-251-004	01	TYPICAL INTERFACE DETAILS - BALUSTRADE	Detail 5 – remove step at approx. 150mm above FRL Balustrade height too low – increase to 1350mm	C
HLM-SZ-SL-PL-240-001	04	UPPER ROOF LAYOUT	Project Co to provide space to form route for quench pipes through the Facilities to the termination point of the upper roof	C
HLM-Z4-00-AS-240-001	02	A+E CANOPY LAYOUT	Revision to canopy under consideration	C

Drawing Reference	Rev	Drawing Title	Comment	Drawing Status
HLM-SZ-00-PL-252-002	02	GROUND FLOOR INTERNAL WALL TYPES AND SETTING OUT SHEET 2	Generally there is an inconsistent approach to office partitions – many though not all are not provided with a minimum acoustic performance. Although not clinical spaces, minimum performance criteria for office partitions are provided in SHTM-08-01 No separating wall performances given for “Tipperlinn Rooms” MRI rooms – query use of single door with no lobby for these potentially very noisy spaces. Latest revision shows improvements but still concern over a number of rooms. Partition Specific comments: G-F1-028 EPSS Multi-Dis. Office (6P) and G-F1-030 Tipperlinn Multi-Dis. Office (7P) - No required performance under SHTM-08-01 as regarded as open plan offices, however recommend 37 Dnt,w (42 Rw). G-F1-030 Tipperlinn Multi-Dis. Office (7P) and G-F1-031 Tipperlinn Sitting Room - 47 Dnt,w (52 Rw). G-F1-031 Tipperlinn Sitting Room and G-F1-032 Tipperlinn Group Room - 47 Dnt,w (52 Rw). G-F1-032 Tipperlinn Group Room and G-F1-033 Art Room - 47 Dnt,w (52 Rw).	C

Drawing Reference	Rev	Drawing Title	Comment	Drawing Status
HLM-SZ-00-PL-252-002 **(continued from previous page)**	02	GROUND FLOOR INTERNAL WALL TYPES AND SETTING OUT SHEET 2	G-F1-031; G-F1-032; G-F1-033 Tipperlin Rooms and G-F1-029 Corridor - 37 Dnt,w (42 Rw). G-F1-048 Group Room and G-F1-036 Dining - 47 Dnt,w (52 Rw). G-F1-048 Group Room and G-F1-098 G-F1-098 - 47 Dnt,w (52 Rw).	C
HLM-SZ-00-PL-252-003	02	GROUND FLOOR INTERNAL WALL TYPES AND SETTING OUT SHEET 3	Generally there is an inconsistent approach to office partitions – many though not all are not provided with a minimum acoustic performance. Although not clinical spaces, minimum performance criteria for office partitions are provided in SHTM-08-01. Latest revision shows improvements but still concern over a number of rooms.	C
HLM-Z2-01-PL-252-001	02	FIRST FLOOR INTERNAL WALL TYPES AND SETTING OUT SHEET 1	Generally there is an inconsistent approach to office partitions – many though not all are not provided with a minimum acoustic performance. Although not clinical spaces, minimum performance criteria for office partitions are provided in SHTM-08-01. Latest revision shows improvements but still concern over a number of rooms.	C
HLM-SZ-01-PL-252-002	02	FIRST FLOOR INTERNAL WALL TYPES AND SETTING OUT SHEET 2	Those partitions separating offices from other spaces are generally marked up as 37dB DnTw walls where SHTM-08-01 recommendations for these partitions are generally 42db DnTw. Latest revision shows improvements but still concern over a number of rooms.	C

Drawing Reference	Rev	Drawing Title	Comment	Drawing Status
HLM-SZ-02-PL-252-002	02	SECOND FLOOR INTERNAL WALL TYPES AND SETTING OUT SHEET 2	Generally there is an inconsistent approach to office partitions – many though not all are not provided with a minimum acoustic performance. Although not clinical spaces, minimum performance criteria for office partitions are provided in SHTM-08-01. Latest revision shows improvements but still concern over a number of rooms.	C
HLM-Z2-03-PL-252-001	02	THIRD FLOOR INTERNAL WALL TYPES AND SETTING OUT SHEET 1	Generally there is an inconsistent approach to office partitions – many though not all are not provided with a minimum acoustic performance. Although not clinical spaces, minimum performance criteria for office partitions are provided in SHTM-08-01. Latest revision shows improvements but still concern over a number of rooms. Partition Specific comments: 3-K2-053 Residents Play Room and Corridor - No required performance under SHTM-08-01, however recommend 37 Dnt,w (42 Rw) to limit noise break-out to family bedrooms opposite. 3-K2-051 Residents Day Room and Corridor - No required performance under SHTM-08-01, however recommend 37 Dnt,w (42 Rw) to limit noise break-out to family bedrooms opposite. R-H3-004 Workshop / Tutorial Room 2 and 3-H3-007 WC - 42 Dnt,w (47 Rw)	C

Drawing Reference	Rev	Drawing Title	Comment	Drawing Status
HLM-SZ-03-PL-252-003	02	THIRD FLOOR INTERNAL WALL TYPES AND SETTING OUT SHEET 3	Partitions separating multi-bed rooms have been specified with Dntw 37dB in line with general hospital multi-bed rooms. Note that SHTM-08-01 has a higher performance requirement of 42dB DnTw for partitions separating "Children and older people (multi bed)" rooms Those partitions separating offices from other spaces are generally marked up as 37dB DnTw walls where SHTM-08-01 recommendations for these partitions are generally 42db DnTw Partition Specific Comments: 3-C1.4-063 Play Room and 3-C1.4-020 Corridor - No required performance under SHTM-08-01, however recommend 37 Dnt,w (42 Rw) to limit noise break-out to nearby treatment rooms and bed room	C
HLM-SZ-04-PL-252-002	02	FOURTH FLOOR INTERNAL WALL TYPES AND SETTING OUT SHEET 2	Inconsistency in office partition specification. Query whether partition between Upper Primary Classroom and Secondary Classroom specified with sufficient acoustic performance as not consistent with guidance from Building Bulletin 93, Acoustic Design of Schools a Design Guide. Partition Specific Comments: 4-R2-011 1:1 (assumed interview room) and 4-R2-003 Ass. Health Rec. Mgr (4P) - 37 Dnt,w (42 Rw). 4-R2-011 1:1 (assumed interview room) and 4-R2-001 Corridor - 37 Dnt,w (42 Rw).	C

Drawing Reference	Rev	Drawing Title	Comment	Drawing Status
HLM-SZ-B1-PL-252-001	02	BASEMENT INTERNAL WALL TYPES AND SETTING OUT SHEET 1	There is inconsistency in mark-up of the ancillary spaces – e.g. mailroom – storage given higher performing partition than office to office Kitchen to trolley park is given a high performing partition at 52dB Those partitions separating offices from other spaces are generally marked up as 37dB DnTw walls where SHTM-08-01 recommendations for these partitions are generally 42db DnTw. Latest revision shows improvements but still concern over a number of rooms.	C
HLM-SZ-XX-DT-251-009	03	TYPICAL INTERFACE DETAILS - COURTYARD EXTERNAL WALLS	Detail 3 – Door Threshold. Potential cold bridge at threshold. Note regarding Full Fill Cavity Insulation F30 150A incorrect	C
HLM-Z2-SL-EL-251-001	02	TYPICAL CLADDING - LITTLE BROTHER ENVELOPE	Clouded areas to be confirmed	C
HLM-Z4-SL-EL-251-001	03	TYPICAL CLADDING - BIG BROTHER ENVELOPE	Clouded areas to be confirmed	C
HLM-SZ-00-EL-251-001	02	TYPICAL CLADDING AND EXTENT - SPINE WALL	Details of pattern to be applied to wall panelling to be submitted for review	C
HLM-Z4-SL-EL-251-002	02	TYPICAL CLADDING CAMHS	Clouded areas to be confirmed	C
HLM-SZ-SL-SE-251-001	02	TYPICAL SECTIONS THROUGH EXTERNAL WALL SHEET 1	Transfer beams not shown in Sections 1and 2. Half landing at GF does not touch wall. It would greatly assist the review process if room names were added.	C
HLM-SZ-SL-SE-251-002	02	TYPICAL SECTIONS THROUGH EXTERNAL WALL SHEET 2	Structural section at stepped slab yet to be resolved in Section 7. It would greatly assist the review process if room names were added.	C
HLM-SZ-SL-SE-251-003	02	TYPICAL SECTIONS THROUGH EXTERNAL WALL SHEET 3	Structural section at stepped slab yet to be resolved in Section 8. . It would greatly assist the review process if room names were added.	C
HLM-SZ-SL-SE-251-004	02	TYPICAL SECTIONS THROUGH EXTERNAL WALL SHEET 4	Stepped slab resolved in Section 11? Board to advise required height of balustrade at balcony in Section 13. It would greatly assist the review process if room names were added.	C

Drawing Reference	Rev	Drawing Title	Comment	Drawing Status
HLM-SZ-SL-SE-251-005	02	TYPICAL SECTIONS THROUGH EXTERNAL WALL SHEET 5	Board to advise required height of balustrades in Section 15. The helipad structure should be show in Section 15. Is the section at the stepped slab at the Plant Rooms correct? It is much smaller than elsewhere. It would greatly assist the review process if room names were added.	C
HLM-SZ-SL-SE-251-006		TYPICAL SECTIONS THROUGH EXTERNAL WALL SHEET 6	Board to advise required height of balustrades. Structural section at stepped slab yet to be resolved. It would greatly assist the review process if room names were added.	C
HLM-SZ-SL-SE-251-007	01	TYPICAL SECTIONS THROUGH EXTERNAL WALL SHEET 7	Section 21s shown twice on the key plan and the CAMHS section appears to be incorrect or omitted. It would greatly assist the review process if room names were added.	C
HLM-SZ-SL-SE-251-008	01	TYPICAL SECTIONS THROUGH EXTERNAL WALL SHEET 8	Details of Basement structure and waterproofing to be confirmed. Is there a joint in the concrete roof structure at the Energy Centre end of the service corridor roof. It would greatly assist the review process if room names were added.	C
HLM-SZ-SL-SE-251-009	01	TYPICAL SECTIONS THROUGH EXTERNAL WALL SHEET 9	Details of Basement structure and waterproofing to be confirmed. Is there a joint in the concrete roof structure at the Energy Centre end of the service corridor roof. It would greatly assist the review process if room names were added.	C
HLM-SZ-SL-DT-322-001	02	TYPICAL INTERNAL DOOR TYPES	Concern that proposed vision panels may not provide an acceptable level of observation	C

Drawing Reference	Rev	Drawing Title	Comment	Drawing Status
HLM-SZ-00-PL-322-001	02	GROUND FLOOR INTERNAL DOORS AND SCREENS	CAMHS – square upper vision panels with vistamatic blinds confirmed for bedrooms – outward opening in emergency - all therapy and group rooms and G-F1-039 and 037 to have vision panels. Rooms No's G-F1- 048, 005, 007, 008, 009, 026, 022(h), 024(h), 020(h) and 004 to have vision panels. Square upper vision panels denoted (h). All side screens in CAMHS to have interstitial blinds. Room G-A1-069 external door to have vision panel. Room G-A1-035 both doors to be type 1b and 1d. Room G-A1-031 to be type 1d. Resus Rooms and Treatment Rooms with doors to have vision panels. Room G-A1-017 to be type 1b. Room G-A1-066 to be type 1d. On all floors Consult Exam Rooms to have vision panel with vistamatic blind. Doors and screen in shelled MRI to be as per other MRI accommodation. Room G-Q1-098 to be type 1d. Room G-Q1-108 to be type 1d. Inconsistent Control Room screen designation for CT Scanner Rooms.G-Q1-035 and 036 to be type 1d. Room G-Q1-034 to be type 1b. Rooms G-Q1-010 and 014 to be type 1d. Prep Room/Fluoroscopy confirm radiation protection. G-D1-008 to be type 1d. Vision panels in Department D2 to be confirmed. Rooms G-D5-004, 007, 008, 009 and 010 to be type 1d.	C
HLM-SZ-01-PL-322-001	02	FIRST FLOOR INTERNAL DOORS AND SCREENS	Room 01-H2-016 to be type 1d. Room 01-B1-043 to be type 1b. Room 01-B1-00 to be 1d Room 01-B1-007 to be 1d. Room 01-J1-003 to be type 1d into corridor. 01-L1-005 both doors to be type 1d. 01-L1-052 to be type 1b. On all floors 1 to 1 rooms to be type 1B. Room 01-P1-048 to be type 1a. Rooms 01-P1-025 & 026 to be type 1d. Room 01-P1-015 to be type 1b. Department D6 – all Rehab & Treatment Rooms to be type 1d. Room 01-D3-001 to be type 1b.	C

Drawing Reference	Rev	Drawing Title	Comment	Drawing Status
HLM-SZ-03-PL-322-001	02	THIRD FLOOR INTERNAL DOORS AND SCREENS	On all floors all Treatment Rooms and Clean Utility Rooms to be door type 1d. On all floors Ward Kitchens to have door type 1d. 03-C1.2-028 to be door type 1a. 03-C1.6-002 to be door 1b. Screen adjacent to door at room no 03-C1-052. Room 03-D9-016 to be type 1e. Room 03-U1-001 to be type 1d. Room 03-C1.3-025 to be type 1d. Room 03-C1.5-003 to be type 1d. Room 03-K2-039 to be type 1a. Room 03-H3-018 to be type 1B. 03-H3-019 to be type 1b.	C
HLM-SZ-00-PL-330-001	04	GROUND FLOOR INTERNAL FINISHES PLAN	All DSRs, Cleaners Rooms and Dirty Utilities to be F8/W2/S4. Emergency Department –Resus Rooms G-A1-028, 029 and Triage G-A1-035 walls should be W2. Room G-A1-066 should be F8/W1/S4. Confirm finishes in Room No's G-A1-014, 060, 040, 063,064 and 065, G-A2-036, 040, G-A3-002, 003 and 004, G-D1-024, G-Q1-036, G-N1-040.G-D2-013 and 001. G-D5-007 walls should be W2. G-F1-022 and G-A1-015 cushioned sports flooring. Add finishes in all stairs	C
HLM-SZ-01-PL-330-001	04	FIRST FLOOR INTERNAL FINISHES PLAN	All DSRs, Cleaners Rooms and Dirty Utilities to be F8/W2/S4. All walls in Clinical Bed Spaces to be W2. 01-B1-023 add accent floor. Need to discuss S3 rather than S4 in Theatres Suites. 01-B1- 065 query colour change. Testing Rooms in D4 inconsistent – proprietary booths. 01-P1-048, 149, 161 and 162 finishes missing, Cushioned sports flooring to 01-D6-027, 028,029,030,035 048, 039, 046, 054, 053, 036, 032. Specialist hygienic white wall cladding to 01-D6-039 and 046. Add finishes in all stairs	C
HLM-SZ-02-PL-330-001	04	SECOND FLOOR INTERNAL FINISHES PLAN	All DSRs, Cleaners Rooms and Dirty Utilities to be F8/W2/S4. Cushioned sports flooring to 02-N2-008, 011, 012 and 023. Specialist hygienic white wall cladding to 02-N2-023. Carpet pattern to be discussed as part of RDD. Add finishes in all stairs	C

Drawing Reference	Rev	Drawing Title	Comment	Drawing Status
HLM-SZ-03-PL-330-001	04	THIRD FLOOR INTERNAL FINISHES PLAN	All DSRs, Cleaners Rooms and Dirty Utilities to be F8/W2/S4. Room no's 03-H3-001, 004, 005 and 010 to be F5. 03-U1-001, 002 and 003 to be W4. Add finishes in all stairs	C
HLM-SZ-04-PL-330-001	04	FOURTH FLOOR INTERNAL FINISHES PLAN	All DSRs, Cleaners Rooms and Dirty Utilities to be F8/W2/S4. Room no 04-R1-009 to be F5. 4-H1-013, 022, 024, 025, 028, 029, 030, 031, 032, 012 and 017 to be F4 Confirm finishes for 04-H1-026. Add finishes in all stairs	C
HLM-SZ-B1-PL-330-001	05	BASEMENT INTERNAL FINISHES PLAN	All DSRs, Cleaners Rooms and Dirty Utilities to be F8/W2/S4. B-S3-002 and 005, B-S12–001 and. B-S8-001 to be F12. WEEE/Furniture/White Goods Store to be F12. Add finishes in all stairs	C
HLM-SZ-00-PL-330-100		ANTI-LIGATURE PROPOSALS	As discussed at the meeting on 17/10/14, in addition to the areas in CAMHS and the Mental Health Exam Room in A1, the following rooms require to have anti-ligature fittings. G-A2-044, 1-L1-015, 2-L2-010, 2-L2-142 and 3-C1.1-058	C
HLM-Z2-00-PL-332-001	02	GROUND FLOOR CEILING LAYOUT SHEET 1	Room No G-D8-002, G-K1-010 015, o17 & 018 – Type C. G-D5-007 – Type B. G-G2-013 – Type A, G-D1-037, 041 – Type C. G-D1-010,020, 021 & 046 – Type B.	C
HLM-SZ-00-PL-332-002	02	GROUND FLOOR CEILING LAYOUT SHEET 2	Room No G-Q1-141 – Light Clinical Dry, CAMHS - plasterboard ceilings in all clinical areas. Inconsistencies in ceiling designation in Toilets.	C
HLM-SZ-00-PL-332-003	02	GROUND FLOOR CEILING LAYOUT SHEET 3	Room No G-M1-012, 027 and 042 – Type B as other Consult/Exam Rooms. G-M1-010, 029 and 036 should be type C. G-Q1-082 – Type C. G-A1-010 – Type B.	C
HLM-Z2-01-PL-332-001	02	FIRST FLOOR CEILING LAYOUT SHEET 1	Room Number 01-D4-004 –Type C. 01-D4-002, 003,005 & 007 - Specialist installation. 01-D3-001 – Type C. 01-D7-003 & 006 – Type B. 01-D7-005 – Type C. 01-D6 remaining five no Therapy Rooms to be Type B. 01-D1 – 015 & 016 – Type B.	C

Drawing Reference	Rev	Drawing Title	Comment	Drawing Status
HLM-SZ-01-PL-332-002	02	FIRST FLOOR CEILING LAYOUT SHEET 2	Dept. B1 – all bed areas to be Type D1. 01-B1-045, 047, 0 48 049, 060,082,078 & 084 – Type C. 01-H2-007 – Type C. 01-H2-021-Type D1. 01-P1-162 – Type C. 01-P1-143,145,147,172 & 174 – Type C. 01-P1 024,025,026, 029,030 031 – Type B. 01-P1-089 – Type C	C
HLM-SZ-01-PL-332-003	02	FIRST FLOOR CEILING LAYOUT SHEET 3	Room No 01-P1-109 & 113 – Type B. 01-P1–100 & 102 Type D2 & D3. 01-P1-119 – Type C. 01-L1-031 – Type B. 01-L1–052,060 &061	C
HLM-SZ-02-PL-332-002	02	SECOND FLOOR CEILING LAYOUT SHEET 2	Room No 02-M4-004,005,007 & 013 – Type C. 02-L2-056, 057 – Type C	C
HLM-SZ-02-PL-332-003	02	SECOND FLOOR CEILING LAYOUT SHEET 3	02-S5-005 & 004 – Type D2 & D3. 02-L2-069, 075 & 076 – Type C. 02-N2-001 – Type F	C
HLM-Z2-03-PL-332-001	03	THIRD FLOOR CEILING LAYOUT SHEET 1	Room No 03-D2-003 006, 051,053 & 085 – Type C. 03-D2-042 & 078 – Type D2	C
HLM-SZ-03-PL-332-002	02	THIRD FLOOR CEILING LAYOUT SHEET 2	Room No 03-Z1-008 – Type F. 03-C1.8-037– Type C. 03-C1.2-028,043 – Type C. 03-C1.1-030 – Type C. 03-C1.5-003 –Type C. 03-C3-004 – Type C. 03-C1.7-003,004 & 005 – Type B. 03-C1.7-002 – Type C. 03-C1.3-018 & 020 –Type C	C
HLM-SZ-03-PL-332-003	02	THIRD FLOOR CEILING LAYOUT SHEET 3	Room No 03-C1.4-023, 024, 025,026,028,029 & 030 – Type C. 03-U1-007 & 010 – Type C.03-D9-007 & 015 – Type C. 03-C2-002 – Type A. 03-U1-001- Type D1	C
HLM-SZ-04-PL-332-002	02	FOURTH FLOOR CEILING LAYOUT SHEET 2	Room No 04-H1-026 – why is this by Specialist? 04-H1-016,018 & 027 – Type D1	C
HLM-SZ-00-PL-450-002	05	GROUND FLOOR ACCESS & MAINTENANCE STRATEGY	Confirm large and small cherry picker can fit into FM Lift 005 and rooms identified as access routes to balconies.	C

Drawing Reference	Rev	Drawing Title	Comment	Drawing Status
HLM-SZ-00-PL-410-001	02	GROUND FLOOR WALL PROTECTION LAYOUT	Some disposal holds missing full wall protection and full height door protection. GA2-082 and GK1- 029 missing full wall protection. Route for food and other trolleys to CAMHs dining room - no wall protection. No bed head locators shown in ground floor areas with bed. Is this deliberate? Why only half height door protection in Resus?	C
HLM-SZ-01-PL-410-001	02	FIRST FLOOR WALL PROTECTION LAYOUT	Some disposal holds missing full wall protection. IH2-001 and P1-099 missing full wall protection. Protection needed for linen delivery to changing rooms. Consider full height wall protections from into and out of recovery room back to wards. Corner protection missing in following areas: 01-D6 003, 01-H2-023, 01-H2-014, 01-T2-003, 01-P1-156, 01-P1-182, 01-P1-189, 01-P1-057, 01-H2-029, 01-L-085, 01-L1-080, 01-B1-101, 01-B1-070, 01-B1-034 (Linen Bay), Recover bay pillar, Staff bases	C
HLM-SZ-02-PL-410-001	02	SECOND FLOOR WALL PROTECTION LAYOUT	Corner protection missing in following areas: 02-L2-141,02-L2-043, 02-G2-002	C
HLM-SZ-03-PL-410-001	02	THIRD FLOOR WALL PROTECTION LAYOUT	Corner protection missing in following areas: 03 D9 016, 03 C1.1 023, 03 C1.8 028, 03-T2-001, 03-C1.3-002, 03-C1.3-023, 03-C4-007.	C
HLM-SZ-04-PL-410-001	02	FOURTH FLOOR WALL PROTECTION LAYOUT	Corner protection missing in : 04-S7–003, 04-R1-009	C

Drawing Reference	Rev	Drawing Title	Comment	Drawing Status
HLM-SZ-B1-PL-410-001	02	BASEMENT WALL PROTECTION LAYOUT	Assume full height wall protection is from skirting to height of 2000mm Suggest some principles for these drawings: 1) All FM routes should have half or full height wall protection. 2) All rooms which linen, catering, waste, HSDU trolleys are used should have full height wall protection. 3) All rooms which linen, catering, waste, HSDU trolleys are used should have full height door protection. Missing in clean and dirty trolley holds in main kitchen and supplies receipt bay. 4) All corners in corridors where FM traffic is moving should have corner protection. Corner protection looks as if it is missing in some areas e.g. corner of bed store, corner of corridor from lift. 5) All bedded areas should have some door protection. 6) Wall protection (NBS –P20/170k) is needed in the following rooms within the kitchen area: o B-S1-013 o B-S1-017 o B-S1-031 7) The following doors need door protection – NBS P20/170L: o B-S1 – 031 o B-S1 – 021 o B-S1 – 022 o B-S1 – 025 o B-S1 – 005	C
HLM-SZ-00-SK-401-001	02	RHSC MAIN RECEPTION DESK DETAILS	Key reception desks at the entrances of the building will need to be secured, closed down out of office hours.	C
HLM-SZ-00-SK-401-002	02	RHSC POD RECEPTION DESK	Key reception desks at the entrances of the building will need to be secured, closed down out of office hours.	C
HLM-SZ-00-SK-401-003	02	DCN MAIN RECEPTION DESK DETAILS	Key reception desks at the entrances of the building will need to be secured, closed down out of office hours.	C

Drawing Reference	Rev	Drawing Title	Comment	Drawing Status
HLM-Z2-00-PL-400-402	04	GROUND FLOOR EQUIPMENT LAYOUT SHEET 00-402	See comments on drawings	C
HLM-Z2-00-PL-400-420	03	GROUND FLOOR EQUIPMENT LAYOUT SHEET 00-420	See comments on drawings	C
HLM-Z2-01-PL-400-404	03	FIRST FLOOR EQUIPMENT LAYOUT SHEET 01-404	See comments on drawings	C
HLM-Z3-03-PL-400-406	03	THIRD FLOOR EQUIPMENT LAYOUT SHEET 03-406	See comments on drawings	C
HLM-Z4-00-PL-400-413	03	GROUND FLOOR EQUIPMENT LAYOUT SHEET 00-413	See comments on drawings	C
HLM-Z4-02-PL-400-411	04	SECOND FLOOR EQUIPMENT LAYOUT SHEET 02-411	See comments on drawings	C
HLM-Z4-B1-PL-400-402	04	BASEMENT FLOOR EQUIPMENT LAYOUT SHEET B1-402	See comments on drawings	C
HLM-SZ-00-PL-400-422	01	Ground Floor Equipment Layout Sheet 00-422	CCTV and Access Control requirements to be incorporated. G-COR-007 to have 1no Resting Place required on window side looking into Spiritual Care Courtyard.	C
HLM-SZ-00-PL-400-423	01	Ground Floor Equipment Layout Sheet 00-423	CCTV and Access Control requirements to be incorporated.G-COR-008 – add 1no Resting Place at G-M1-038. Delete Resting Place in G-COR-011.	C
HLM-SZ-01-PL-400-421	01	First Floor Equipment Layout Sheet 01-421	CCTV and Access Control requirements to be incorporated.	C
HLM-SZ-01-PL-400-422	01	First Floor Equipment Layout Sheet 01-422	CCTV and Access Control requirements to be incorporated.01-COR-007 – move Resting Places to window side looking into courtyards. Omit Resting Place in 01-COR-011.	C
HLM-SZ-02-PL-400-414	01	Second Floor Equipment Layout Sheet 02-414	CCTV and Access Control requirements to be incorporated.02-COR-006– move Resting Place to window side looking into courtyard.	C
HLM-SZ-02-PL-400-415	01	Second Floor Equipment Layout Sheet 02-415	CCTV and Access Control requirements to be incorporated.02-COR-006 – move Resting Places to window side looking into courtyards.	C
HLM-SZ-03-PL-400-419	01	Third Floor Equipment Layout Sheet 03-419	CCTV and Access Control requirements to be incorporated.	C
HLM-SZ-03-PL-400-420	01	Third Floor Equipment Layout Sheet 03-420	CCTV and Access Control requirements to be incorporated.03-COR-006 Move Resting place to south side of corridor looking into courtyard	C

Drawing Reference	Rev	Drawing Title	Comment	Drawing Status
HLM-SZ-04-PL-400-407	01	Fourth Floor Equipment Layout Sheet 04-407	CCTV and Access Control requirements to be incorporated.03-COR-007 Move Resting place to south side of corridor looking into courtyard	C
WW-XX-XX-SC-511-001	1	NATURAL GAS SCHEMATIC	Each Boiler to be separately metered. Gas meters to be fitted with a bypass. Note 1 – Egg crate grilles to ventilated ceilings may be an infection control issue. To be reviewed for compliance with infection control and health facilities notes. Gas requirement to kitchen now removed.	C
WW-XX-XX-SC-513-001	1	OIL MAINS SCHEMATIC	Detail to be provided of day tank ancillaries e.g. vents, overflow, alarms etc. Oil metering strategy to account for oil returns to main tank	C
WW-XX-XX-SC-521-001	2	ENERGY CENTRE HEATING SCHEMATIC	Schedule of plant and sizes to be developed in line with the design progression	C
WW-XX-XX-SC-521-002	1	HEAT STATION 1 SCHEMATIC	Schedule of plant and sizes to be developed in line with the design progression DHW expansion vessel type not consistent with Domestic Water Schematic expansion vessel type. To be addressed	C
WW-XX-XX-SC-521-003	1	HEAT STATION 2 SCHEMATIC	Schedule of plant and sizes to be developed in line with the design progression DHW expansion vessel type not consistent with Domestic Water Schematic expansion vessel type. To be addressed	C
WW-XX-XX-SC-521-004	1	HEAT STATION 3 SCHEMATIC	Schedule of plant and sizes to be developed in line with the design progression DHW expansion vessel type not consistent with Domestic Water Schematic expansion vessel type. To be addressed	C

Drawing Reference	Rev	Drawing Title	Comment	Drawing Status
WW-XX-XX-SC-521-005	1	HEAT STATION 4 SCHEMATIC	Schedule of plant and sizes to be developed in line with the design progression DHW expansion vessel type not consistent with Domestic Water Schematic expansion vessel type. To be addressed	C
WW-SZ-B1-PL-500-001	1	Level B1 – Water Services Distribution	As ground floor general comment.	C
WW-SZ-00-PL-500-001	1	Level 00 - Water Services Distribution	General Comment – Drawing lacks detail. Further detailed drawings expected. Schedule of plant and sizes to be developed in line with the design progression Typical connection details expected Rooms requiring water not shown to have connections, IHSL to check and amend. Examples include: G-A"-080 DSR expected to have water G-F1-037 Therapeutic kitchen expected to have water G-A1—058, 055, 044 WC and staff shower expected to have water	C
WW-SZ-01-PL-500-001	1	Level 01 - Water Services Distribution	As ground floor general comment	C
WW-SZ-02-PL-500-001	1	Level 02 - Water Services Distribution	As ground floor general comment	C
WW-SZ-03-PL-500-001	1	Level 03 - Water Services Distribution	As ground floor general comment	C
WW-SZ-04-PL-500-001	1	Level 04 - Water Services Distribution	As ground floor general comment	C
WW-SZ-04-PL-500-003	1	Level 04 – Water Tank Room	Proposal is generally clear. Schedule of plant and sizes to be developed in line with the design progression. A number of further issues need to be addressed: - Pipework details need to be made clear with either legend or additional notes. For example, it needs to be clear whether pipes are at high/low level, exposed/in voids - Additional notes required	C

Drawing Reference	Rev	Drawing Title	Comment	Drawing Status
			where pipe break are shown ie where pipe continuation may be found - Lab water tank pipework needs to be shown - Clear access ways and maintenance space should be shown (ie pipework from pumps P3 and P4 to lab water tank appears to block access through plantroom, is pipework at high level?) - Multi-service co-ordination to be shown to confirm access / maintenance space is suitable Pipe sizes need to be reviesed. BCWS from basement is shown as 133mm dia on layout but 108mm dia on the schematic. Cold water feed sizes from filtered tank (76mm dia) do not tie up with schematic (shows 159mm dia)	
WW-SZ-B1-PL-521-001	1	Level B1 - Heating Distribution	General Comment – Drawing lacks detail. Further detailed drawings expected including all valving details. Schedule of plant and sizes to be developed in line with the design progression Specific drawing comments - Provide detail of Primary Heating Header Highlight heat stations IHSL to confirm the relevance of pipework colours	C
WW-SZ-00-PL-521-001	1	Level 00 -Heating Distribution	See basement level general comments	C
WW-SZ-01-PL-521-001	1	Level 01 -Heating Distribution	See basement level general comments	C
WW-SZ-02-PL-521-001	1	Level 02 -Heating Distribution	See basement level general comments	C
WW-SZ-03-PL-521-001	1	Level 03 -Heating Distribution	See basement level general comments	C

Drawing Reference	Rev	Drawing Title	Comment	Drawing Status
WW-SZ-04-PL-521-001	1	Level 04 -Heating Distribution	See basement level general comments	C
WW-SZ-B1-PL-524-001	1	Level B1 - Ventilation Distribution	See ground floor level general comments Confirm dedicated ventilation for the UPS room is to a minimum of BS EN 5072-2 Not one duct size shown Room numbers are not shown on the XREF. Required, add. -	C
WW-SZ-00-PL-524-001	1	Level 00 -Ventilation Distribution	General Comments – Drawing significantly lacks detail in order to provide a suitable review. Drawing purely shows main duct run locations. No ancillaries (fire dampers, attenuators etc.) shown and no room detail provided (grille types, locations, connections). This is all required for each room or various typical details to be provided to Board's satisfaction Duct sizes only shown for very few locations – all duct sizes required, including risers etc. Could be done through schematics if easier Number of ducts and duct drops clash with partitions. Co-ordination required. Co-ordination with other services to be undertaken – sections of congested areas to be shown to ensure clear ceiling heights are maintained Notes need to be much clearer i.e. if ductwork is in a void,/exposed, whether a duct is rising or dropping Legend needs to revised. Symbols shown aren't on the layout. Needs to detail what the significance of duct colours are i.e. blue extract, pink supply, green dirty. Full design to be in line with all PCPs, BCRs, manufacturer's guidance and SHTM requirements High extent of main duct runs shown above rooms north of gridline F01	C

Drawing Reference	Rev	Drawing Title	Comment	Drawing Status
			including through labs, staff rooms, consultation rooms, surgery rooms and open plan offices. All ducts above rooms to have acoustic treatment to maintain acoustic requirements	
WW-SZ-01-PL-524-001	1	Level 01 -Ventilation Distribution	See ground floor general comments	C
WW-SZ-02-PL-524-001	1	Level 02 -Ventilation Distribution	See ground floor general comments A number of rooms between grid lines E01 and E06 do not have ventilation supplies shown. Rooms to have mechanical ventilation	C
WW-SZ-03-PL-524-001	1	Level 03 -Ventilation Distribution	See ground floor general comments Drawing is clearly incomplete. All rooms to have mechanical ventilation	C
WW-SZ-04-PL-524-001	1	Level 04 -Ventilation Distribution	See ground floor general comments Room numbers are not shown on the XREF. Required, add. Drawing does have more detail than other floors between grid lines E01-E06.. More suitable level of detail ie ductwork sizes, FD's etc. shown but expect this level of detail everywhere across the drawings	C
WW-SZ-B1-PL-525-001	1	Level B1 - Cooling Distribution	General Comment – Drawing lacks detail. Further detailed drawings expected including all valving details. Schedule of plant and sizes to be developed in line with the design progression	C
WW-SZ-00-PL-525-001	1	Level 00 -Cooling Distribution	See basement level comments	C
WW-SZ-01-PL-525-001	1	Level 01 -Cooling Distribution	See basement level comments	C
WW-SZ-02-PL-525-001	1	Level 02 -Cooling Distribution	See basement level comments	C

Drawing Reference	Rev	Drawing Title	Comment	Drawing Status
WW-SZ-03-PL-525-001	1	Level 03 -Cooling Distribution	See basement level comments	C
WW-SZ-04-PL-525-001	1	Level 04 -Cooling Distribution	See basement level comments	C
WW-Z3-04-PL-523-001	1	Zone Z3 - Level 04 – Chilled Water Plant Area	Drawing shows generally a suitable level of information with relevant labelling and information Schedule of plant and sizes to be developed in line with the design progression Medical air and vaccum plant layout to be provided Location and resilience of chillers still under review – to be to the Board's satisfaction To scale chiller and external cooling units for MRI, server rooms and Board Equipment to be shown, including pipework arrangements	C
WW-Z3-02-PL-524-001	1	Level 02 - Theatre Ventilation Plantroom	Level of information is more suitable with labelled AHUs, louvres, drops etc. Schedule of plant and sizes to be developed in line with the design progression Drawing to show duct sizes such that co-ordination can be reviewed. Concern on access and maintenance, particularly as space appears full without attenuators and any heating/cooling/electrical services shown. Access and maintenance areas to be shown. 3D views/sections of the plant should be provided to show co-ordination and services co-ordination at highly serviced areas Multiple co-ordination issues to address. Examples: - Theatre 5 AHU shown to overlap with structural hole and also columns appear to limit plant access and for maintenance. - CTCcanL0, Theatre 3, Xray L0 and MRI Scanners L0 AHUs all	C

Drawing Reference	Rev	Drawing Title	Comment	Drawing Status
			shown to clash with columns) - Theatre 1 AHU also appears to be constrained by column. AHUs to be co-ordinated with structure and access	
WW-Z2-04-PL-524-001	1	Zone Z2 - Level 04 - Ventilation Plantroom 1	Drawing referencing required (AHUs, ductwork sizes, FAIs, drops etc.) Detail of services (attenuators etc.) also to be shown Drawing is too difficult to review without this information.	C
WW-Z2-04-PL-524-002	1	Zone Z2 - Level 04 - Ventilation Plantroom 2	Drawing referencing required (AHUs, ductwork sizes, FAIs, drops etc.) Detail of services (attenuators etc.) also to be shown Drawing is too difficult to review without this information.	C
WW-Z3-04-PL-524-001	1	Zone Z3 - Level 04 - Ventilation Plantroom 3	Drawing to include detail and not make reference to a 'similar drawing'	C
ME-SZ-B1-PL-512-001	2	Basement Floor Plan – Medical Gases Layout	As ground floor comments	C
ME-SZ-00-PL-512-001	2	Ground Floor Plan - Medical Gases Layout	Medical alarm panels do not appear correct. Agreement of locations and provision to be confirmed with the Board Appears to be an over provision of AVSUs, without associated area alarms. Proposals to be reviewed with the Board. Pipework sizes to be shown Valving arrangements to be shown	C
ME-SZ-01-PL-512-001	2	First Floor Plan - Medical Gases Layout	As ground floor comments	C
ME-SZ-02-PL-512-001	2	Second Floor Plan - Medical Gases Layout	As ground floor comments	C
ME-SZ-03-PL-512-001	2	Third Floor Plan - Medical Gases Layout	As ground floor comments	C
ME-SZ-04-PL-512-001	2	Fourth Floor Plan - Medical Gases Layout	As ground floor comments	C
ME-XX-XX-DT-512-001	1	Fourth Floor Plan Medical Gases Sheet	Plant details provided in pictorial form Schedule of plant and sizes to be developed in line with the design progression	C

Drawing Reference	Rev	Drawing Title	Comment	Drawing Status
			Drawing to reflect to scale drawings of Plant proposals	
ME-XX-XX-SC-512-001		Medical Gas \ Medical Oxygen Schematic	**NOT SUBMITTED**	
ME-XX-XX-SC-512-002		Medical Gas \ Nitrous Oxide Schematic	**NOT SUBMITTED**	
ME-XX-XX-SC-512-003		Medical Gas \ Medical Air Schematic	**NOT SUBMITTED**	
ME-XX-XX-SC-512-004		Medical Gas \ Surgical Air Schematic	**NOT SUBMITTED**	
ME-XX-XX-SC-512-005		Medical Gas \ Vacuum Schematic	**NOT SUBMITTED**	
ME-XX-XX-SC-512-006		Medical Gas\ Anaesthetic Gas Scavenging Schematic	**NOT SUBMITTED**	
ME-XX-XX-SC-512-007		Medical Gas \ Plant Alarm Schematic	**NOT SUBMITTED**	
ME-XX-XX-SC-512-008		Medical Gas \ Local distribution Alarm Panel Schematic	**NOT SUBMITTED**	
ME-SZ-B1-PL-569-001	2	Basement Floor Plan - Pneumatic Tube System Layout	Pipework size to be shown Section detail drawings to be provided to show co-ordination in highly serviced areas	C
ME-SZ-00-PL-569-001	2	Ground Floor Plan - Pneumatic Tube System Layout	Refer to basement level comments	C
ME-SZ-01-PL-569-001	2	First Floor Plan - Pneumatic Tube System Layout	Refer to basement level comments	C
ME-SZ-02-PL-569-001	2	Second Floor Plan - Pneumatic Tube System Layout	Refer to basement level comments	C
ME-SZ-03-PL-569-001	2	Third Floor Plan - Pneumatic Tube System Layout	Refer to basement level comments	C
ME-SZ-04-PL-569-001		Fourth Floor Plan - Pneumatic Tube System Layout	**NOT SUBMITTED**	
~~ME-XX-XX-SC-569-001~~ ME-SZ-XX-SC-569-001	3	Pneumatic Tube System Schematic	Auxiliary power supplies, controls cabling and pipework sizing to be detailed	C
ME-SZ-B1-PL-575-001	2	Basement Floor Plan - Sprinkler Coverage	Detailed head, pipework and valving layouts to be provided in line with the detailed developed fire strategy	C
ME-SZ-00-PL-575-001	2	Ground Floor Plan - Sprinkler Coverage	Detailed head, pipework and valving layouts to be provided in line with	C

Drawing Reference	Rev	Drawing Title	Comment	Drawing Status
			the detailed developed fire strategy	
ME-SZ-01-PL-575-001	2	First Floor Plan - Sprinkler Coverage	Detailed head, pipework and valving layouts to be provided in line with the detailed developed fire strategy	C
ME-SZ-02-PL-575-001	2	Second Floor Plan - Sprinkler Coverage	Detailed head, pipework and valving layouts to be provided in line with the detailed developed fire strategy	C
ME-SZ-03-PL-575-001	2	Third Floor Plan - Sprinkler Coverage	Detailed head, pipework and valving layouts to be provided in line with the detailed developed fire strategy	C
ME-SZ-04-PL-575-001	2	Fourth Floor Plan - Sprinkler Coverage	Detailed head, pipework and valving layouts to be provided in line with the detailed developed fire strategy	C
ME-XX-XX-SC-575-002		Sprinkler System Schematic	**NOT SUBMITTED**	
WW-XX-XX-SC-530-001	1	HV Distribution Schematic	To be developed. Cable sizing etc. to be provided	C
WW-XX-XX-SC-530-002	1	LV Distribution Sub-Station No.1 Schematic	To be developed. Cable sizing etc. to be provided	C
WW-XX-XX-SC-530-003	1	LV Distribution Sub-Station No.2 Schematic	To be developed. Cable sizing etc. to be provided	C
WW-XX-XX-SC-530-004	1	IPS System	To be developed. Cable sizing etc. to be provided	C
WW-XX-XX-SC-539-001	1	UPS System Schematic	To be developed. Cable sizing etc. to be provided	C
WW-XX-XX-SC-539-002	1	Earthing System Schematic	To be developed in line with developed design	C
WW-XX-XX-SC-540-001	1	Lighting Control Schematic	Drawing is generic. Drawing to be developed specific to the developed design. Timing operation to be agreed with the Board Night lighting detail to be provided	C
WW-XX-XX-SC-542-001	1	Emergency Lighting Schematic	Drawing is generic. Drawing to be developed specific to the developed design.	C
WW-XX-XX-SC-559-002	1	Induction loop system details & typical electrical mounting heights	No legend or ADB codes for items. IHSL to confirm where panel heaters	C

Drawing Reference	Rev	Drawing Title	Comment	Drawing Status
			are being used Cleaners sockets to be illustrated. Reference to PA in induction loop schematic – there is no PA, revise No indication of special height items i.e. press to exit at high level to prevent use by small children.	
WW-Z3-B1-PL-530-001	1	Zone Z3 – Level B1 – Electrical Plantrooms	Confirmation required that HV Transformers can be readily removed and replaced.	C
WW-Z4-B1-PL-530-001	1	Zone Z4 – Level B1 – Electrical Plantrooms	Confirmation required that HV Transformers can be readily removed and replaced.	C
WW-SZ-B1-PL-533-001	1	Level B1 - Power Plant & Containment Routes	Co-ordinated sections with mechanical services required	C
WW-SZ-00-PL-533-001	1	Level 00 - Power Plant & Containment Routes	Co-ordinated sections with mechanical services required	C
WW-SZ-01-PL-533-001	1	Level 01 - Power Plant & Containment Routes	Co-ordinated sections with mechanical services required	C
WW-SZ-02-PL-533-001	1	Level 02 - Power Plant & Containment Routes	Co-ordinated sections with mechanical services required	C
WW-SZ-03-PL-533-001	1	Level 03 - Power Plant & Containment Routes	Co-ordinated sections with mechanical services required	C
WW-SZ-04-PL-533-001	1	Level 04 - Power Plant & Containment Routes	Co-ordinated sections with mechanical services required	C
ME-SZ-B1-PL-538-001	3	Basement Floor Plan - Layout of Nurse Call Panels	IHSL to confirm if this drawing is required. Cannot locate any information on the drawing relating to Nurse Call.	C
ME-SZ-00-PL-538-001	3	Ground Floor Plan - Layout of Nurse Call Panels	Drawing lacks level of detailed required. Expect Nurse Call Panels to be generally located at Staff Bases – at present they are mainly located at reception areas and waiting areas. IHSL to confirm if architectural backgrounds require updating to identify staff base locations. No indicative Nurse Call Design indicated to illustrate typical extent of coverage, line of sight, follow me	C

Drawing Reference	Rev	Drawing Title	Comment	Drawing Status
			lights etc. Detail to be added	
ME-SZ-01-PL-538-001	3	First Floor Plan - Layout of Nurse Call Panels	Drawing lacks level of detailed required. Expect Nurse Call Panels to be generally located at Staff Bases – at present they are mainly located at reception areas and waiting areas. IHSL to confirm if architectural backgrounds require updating to identify staff base locations. No indicative Nurse Call Design indicated to illustrate typical extent of coverage, line of sight, follow me lights etc. Detail to be added	C
ME-SZ-02-PL-538-001	3	Second Floor Plan - Layout of Nurse Call Panels	Drawing lacks level of detailed required. Expect Nurse Call Panels to be generally located at Staff Bases – at present they are mainly located at reception areas and waiting areas. IHSL to confirm if architectural backgrounds require updating to identify staff base locations. No indicative Nurse Call Design indicated to illustrate typical extent of coverage, line of sight, follow me lights etc. Detail to be added Also either very few panels located on this level or panels have been obscured by backgrounds e.g. 2-L2-045 TD Base etc? IHSL to confirm and address	C
ME-SZ-03-PL-538-001	2	Third Floor Plan - Layout of Nurse Call Panels	Drawing lacks level of detailed required. Expect Nurse Call Panels to be generally located at Staff Bases – at present they are mainly located at reception areas and waiting areas. IHSL to confirm if architectural backgrounds require updating to identify staff base locations. No indicative Nurse Call Design indicated to illustrate typical extent of coverage, line of sight, follow me lights etc. Detail to be added Also either very few panels located on this level or panels have been obscured by backgrounds? IHSL to	C

Drawing Reference	Rev	Drawing Title	Comment	Drawing Status
			confirm and address	
ME-SZ-04-PL-538-001	3	Fourth Floor Plan - Layout of Nurse Call Panels	No Nurse Call panels indicated on this level. IHSL to confirm and address.	C
ME-XX-XX-SC-538-001		Nurse Call System Schematic	NOT SUBMITTED	
ME-EW-XX-PL-571-001	2	Site Plan. External CCTV Layout	Please provide coverage cones to indicate extent of coverage. Camera references, cabling ducting etc. to be detailed	C
ME-SZ-B1-PL-571-001	4	Basement Floor Plan – CCTV & Door Access	Drawing to be updated to reflect comments made during UGM held 18/08/2014' Please provide coverage cones to indicate extent of coverage. Identify camera types e.g. fixed, PTZ. Coverage to include all circulation stairs. Show detail of card reader, press to exit and break glass to show protected area. Make it clear what is a Video Door Entry system, symbol is very similar with what appear to be structural elements of the drawing. Video door entry to show location of receiving station	C
ME-SZ-00-PL-571-001	4	Ground Floor Plan - CCTV & door Access	Drawing to be updated to reflect comments made during UGM held 18/08/2014' Please provide coverage cones to indicate extent of coverage. Identify camera types e.g. fixed, PTZ. Coverage to include all circulation stairs. Show detail of card reader, press to exit and break glass to show protected area. Video door entry to show location of receiving station Fit door and Access Control (AC) to stair 2 to basement	C
ME-SZ-01-PL-571-001	4	First Floor Plan - CCTV & door Access	Drawing to be updated to reflect comment s made during UGM held 18/08/2014'	C

Drawing Reference	Rev	Drawing Title	Comment	Drawing Status
			Please provide coverage cones to indicate extent of coverage. Identify camera types e.g. fixed, PTZ. Coverage to include all circulation stairs and lift lobbies. Show detail of card reader, press to exit and break glass to show protected area. Video door entry to show location of receiving station Address inconsistency with access control on some disposal hold No access control to Plastics dressing clinic and beyond shown – this is not deemed correct. IHSL to address. FM lifts 4 & 5 to have AC PICU HDU to be a secure area. AC to MRI suite already within protected zone, to be agreed with the Board	
ME-SZ-02-PL-571-001	4	Second Floor Plan - CCTV & door Access	Drawing to be updated to reflect comment s made during UGM held 18/08/2014' Please provide coverage cones to indicate extent of coverage. Identify camera typs e.g. fixed, PTZ Coverage to include all circulation stairs and lift lobbies. Show detail of card reader, press to exit and break glass to show protected area. Video door entry to show location of receiving station	C
ME-SZ-03-PL-571-001	4	Third Floor Plan - CCTV & door Access	Drawing to be updated to reflect comment s made during UGM held 18/08/2014' Please provide coverage cones to indicate extent of coverage. Identify camera types e.g. fixed, PTZ. Coverage to include all circulation stairs and lift lobbies. Show detail of card reader, press to exit and break glass to show protected area. Video door entry to show location of receiving station	C
ME-SZ-04-PL-571-001	4	Fourth Floor Plan - CCTV & door Access	Drawing to be updated to reflect comment s made during UGM held 18/08/2014'	C

Drawing Reference	Rev	Drawing Title	Comment	Drawing Status
			Please provide coverage cones to indicate extent of coverage. Identify camera types e.g. fixed, PTZ. Coverage to include all circulation stairs and lift lobbies. Show detail of card reader, press to exit and break glass to show protected area. Video door entry to show location of receiving station	
ME-XX-XX-SC-571-001	2	Intruder Access Control and CCTV Schematic	Drawing is too generic and requires more detail e.g. cable types etc.	C
ME-Z2-00-PL-541-401	2	Ground Floor Plan. Social Work Department. Lighting Layout.	Luminaire schedule to be submitted to review light fittings for suitability. No circuiting or control information to review level of local switching / automatic control. Circuiting and control information to be shown. Sample calculations to be submitted to demonstrate normal and emergency lighting levels. Note that the proposal indicates 50% of light fittings are emergency – IHSL to confirm this is correct	C
ME-Z2-00-PL-541-402	2	Ground Floor Plan. Paediatric Dentistry Department. Lighting Layout.	Luminaire schedule to be submitted to review light fittings for suitability. No circuiting or control information to review level of local switching / automatic control. Circuiting and control information to be shown. Sample calculations to be submitted to demonstrate normal and emergency lighting levels. Note that the proposal indicates 1 in 6 of the light fittings are emergency – IHSL to confirm this is correct.	C
ME-Z2-00-PL-541-403	2	Ground Floor Plan. Family Support Services DepartemntLighting Layout.	Luminaire schedule to be submitted to review light fittings for suitability. No circuiting or control information to review level of local switching / automatic control. Circuiting and control information to be shown. Sample calculations to be submitted to demonstrate normal and emergency lighting levels. Note that the proposal indicates that offices that are 30% larger than other smaller offices still have the	C

Drawing Reference	Rev	Drawing Title	Comment	Drawing Status
			same number of light fittings – what is the impact on achieving energy targets and lighting levels? IHSL to review and address.	
ME-Z2-00-PL-541-404	2	Ground Floor Plan. Cardiology & Respiratory Department. Lighting Layout.	Luminaire schedule to be submitted to review light fittings for suitability. No circuiting or control information to review level of local switching / automatic control. Circuiting and control information to be shown. Sample calculations to be submitted to demonstrate normal and emergency lighting levels.	C
ME-Z2-00-PL-541-405	2	Ground Floor Plan. Main Outpatients Department. Lighting Layout.	Luminaire schedule to be submitted to review light fittings for suitability. No circuiting or control information to review level of local switching / automatic control. Circuiting and control information to be shown. Sample calculations to be submitted to demonstrate normal and emergency lighting levels. Light fittings do not appear to align to a grid pattern – are they mounted in plasterboard? IHSL to confirm and address	C
ME-Z2-00-PL-541-420	2	Ground Floor Plan. RHSC Entrance Lighting Layout	Entrance lighting not designed. Area to be designed and submitted	C
ME-Z3-00-PL-541-407	2	Ground Floor Plan. Radiology Department. Lighting Layout.	Luminaire schedule to be submitted to review light fittings for suitability. No circuiting or control information to review level of local switching / automatic control. Circuiting and control information to be shown. Sample calculations to be submitted to demonstrate normal and emergency lighting levels. MRI Room to be fully detailed. IHSL to confirm there is adequate emergency lighting provision in Xray. IHSL to confirm Provision of 'Room in Use' lights	C
ME-Z4-00-PL-541-411	2	Ground Floor Plan. Emergency department. Lighting Layout.	Luminaire schedule to be submitted to review light fittings for suitability. No circuiting or control information to review level of local switching / automatic control. Circuiting and	C

Drawing Reference	Rev	Drawing Title	Comment	Drawing Status
			control information to be shown. Sample calculations to be submitted to demonstrate normal and emergency lighting levels.	
ME-Z4-00-PL-541-413	2	Ground Floor Plan. Paediatric Acute Receiving Unit Department. Lighting Layout.	Luminaire schedule to be submitted to review light fittings for suitability. No circuiting or control information to review level of local switching / automatic control. Circuiting and control information to be shown. Sample calculations to be submitted to demonstrate normal and emergency lighting levels.	C
ME-Z4-00-PL-541-418	2	Ground Floor Plan. Child & Adolescent Department. Lighting Layout.	Luminaire schedule to be submitted to review light fittings for suitability. No circuiting or control information to review level of local switching / automatic control. Circuiting and control information to be shown. Sample calculations to be submitted to demonstrate normal and emergency lighting levels.	C
ME-Z2-01-PL-541-401	2	First Floor Plan. Audiology Department. Lighting Layout.	Luminaire schedule to be submitted to review light fittings for suitability. No circuiting or control information to review level of local switching / automatic control. Circuiting and control information to be shown. Sample calculations to be submitted to demonstrate normal and emergency lighting levels. Requirement for 'Room in Use' lights?	C
ME-Z2-01-PL-541-402	2	First Floor Plan. Orthoptics Department. Lighting Layout.	Luminaire schedule to be submitted to review light fittings for suitability. No circuiting or control information to review level of local switching / automatic control. Circuiting and control information to be shown. Sample calculations to be submitted to demonstrate normal and emergency lighting levels.	C
ME-Z2-01-PL-541-404	2	First Floor Plan. RHSC Therapies Department. Lighting Layout.	Luminaire schedule to be submitted to review light fittings for suitability. No circuiting or control information to review level of local switching / automatic control. Circuiting and	C

Drawing Reference	Rev	Drawing Title	Comment	Drawing Status
			control information to be shown. Sample calculations to be submitted to demonstrate normal and emergency lighting levels.	
ME-Z2-01-PL-541-406	2	First Floor Plan. RHSC Therapies Department. Lighting Layout.	Luminaire schedule to be submitted to review light fittings for suitability. No circuiting or control information to review level of local switching / automatic control. Circuiting and control information to be shown. Sample calculations to be submitted to demonstrate normal and emergency lighting levels. Will track for hoist clash with light fitting? Review location of emergency light in Rehab Room.	C
ME-Z3-01-PL-541-409	2	First Floor Plan. Operating Theatres Department. Lighting Layout.	Luminaire schedule to be submitted to review light fittings for suitability. No circuiting or control information to review level of local switching / automatic control. Circuiting and control information to be shown. Sample calculations to be submitted to demonstrate normal and emergency lighting levels.	C
ME-Z3-01-PL-541-410	2	First Floor Plan. Operating Theatres Department. Lighting Layout.	Luminaire schedule to be submitted to review light fittings for suitability. No circuiting or control information to review level of local switching / automatic control. Circuiting and control information to be shown. Sample calculations to be submitted to demonstrate normal and emergency lighting levels.	C
ME-Z3-01-PL-541-413	2	First Floor Plan. Operating Theatres Department. Lighting Layout.	Luminaire schedule to be submitted to review light fittings for suitability. No circuiting or control information to review level of local switching / automatic control. Circuiting and control information to be shown. Sample calculations to be submitted to demonstrate normal and emergency lighting levels.	C
ME-Z4-01-PL-541-415	2	First Floor Plan. DCN Acute Care Department. Lighting Layout.	Luminaire schedule to be submitted to review light fittings for suitability. No circuiting or control information to review level of local switching /	C

Drawing Reference	Rev	Drawing Title	Comment	Drawing Status
			automatic control. Circuiting and control information to be shown. Sample calculations to be submitted to demonstrate normal and emergency lighting levels.	
ME-Z4-01-PL-541-417	2	First Floor Plan. PICU & HDU's Department. Lighting Layout.	Luminaire schedule to be submitted to review light fittings for suitability. No circuiting or control information to review level of local switching / automatic control. Circuiting and control information to be shown. Sample calculations to be submitted to demonstrate normal and emergency lighting levels.	C
ME-Z4-01-PL-541-418	2	First Floor Plan. PICU & HDU's Department. Lighting Layout.	Luminaire schedule to be submitted to review light fittings for suitability. No circuiting or control information to review level of local switching / automatic control. Circuiting and control information to be shown. Sample calculations to be submitted to demonstrate normal and emergency lighting levels.	C
ME-Z2-02-PL-541-403	2	Second Floor Plan. Clinical / Management Suite. Lighting Layout.	Luminaire schedule to be submitted to review light fittings for suitability. No circuiting or control information to review level of local switching / automatic control. Circuiting and control information to be shown. Sample calculations to be submitted to demonstrate normal and emergency lighting levels.	C
ME-Z4-02-PL-541-406	2	Second Floor Plan. DCN Inpatients Department. Lighting Layout.	Luminaire schedule to be submitted to review light fittings for suitability. No circuiting or control information to review level of local switching / automatic control. Circuiting and control information to be shown. Sample calculations to be submitted to demonstrate normal and emergency lighting levels.	C
ME-Z4-02-PL-541-410	2	Second Floor Plan. Programmed Investigations Unit Department. Lighting layout.	Luminaire schedule to be submitted to review light fittings for suitability. No circuiting or control information to review level of local switching / automatic control. Circuiting and control information to be shown.	C

Drawing Reference	Rev	Drawing Title	Comment	Drawing Status
			Sample calculations to be submitted to demonstrate normal and emergency lighting levels.	
ME-Z4-02-PL-541-411	2	Second Floor Plan. DCN Therapies Department. Lighting Layout.	Luminaire schedule to be submitted to review light fittings for suitability. No circuiting or control information to review level of local switching / automatic control. Circuiting and control information to be shown. Sample calculations to be submitted to demonstrate normal and emergency lighting levels.	C
ME-Z4-02-PL-541-413	2	Second Floor Plan. Neurophysiology Department. Lighting Layout	Luminaire schedule to be submitted to review light fittings for suitability. No circuiting or control information to review level of local switching / automatic control. Circuiting and control information to be shown. Sample calculations to be submitted to demonstrate normal and emergency lighting levels.	C
ME-Z2-03-PL-541-404	2	Third Floor Plan. Clinical Education Suite Department. Lighting Layout	Luminaire schedule to be submitted to review light fittings for suitability. No circuiting or control information to review level of local switching / automatic control. Circuiting and control information to be shown. Sample calculations to be submitted to demonstrate normal and emergency lighting levels.	C
ME-Z3-03-PL-541-405	2	Third Floor Plan. Paediatric Neurophysiology Department. Lighting Layout	Luminaire schedule to be submitted to review light fittings for suitability. No circuiting or control information to review level of local switching / automatic control. Circuiting and control information to be shown. Sample calculations to be submitted to demonstrate normal and emergency lighting levels.	C
ME-Z3-03-PL-541-406	2	Third Floor Plan. Neuroscience Outpatients Department. Lighting Layout.	Luminaire schedule to be submitted to review light fittings for suitability. No circuiting or control information to review level of local switching / automatic control. Circuiting and control information to be shown. Sample calculations to be submitted to demonstrate normal and	C

Drawing Reference	Rev	Drawing Title	Comment	Drawing Status
			emergency lighting levels.	
ME-Z3-03-PL-541-409	2	Third Floor Plan. Haem / Onc Inpatients & Daycase Department. Lighting Layout.	Luminaire schedule to be submitted to review light fittings for suitability. No circuiting or control information to review level of local switching / automatic control. Circuiting and control information to be shown. Sample calculations to be submitted to demonstrate normal and emergency lighting levels.	C
ME-Z3-03-PL-541-410	2	Third Floor Plan. Specialist Paediatric Biochemistry Lab Department. Lighting layout.	No luminaire schedule submitted to review light fittings for suitability. No circuiting or control information to review level of local switching / automatic control. Circuiting and control information to be shown. Sample calculations to be submitted to demonstrate normal and emergency lighting levels.	C
ME-Z4-03-PL-541-412	2	Third Floor Plan. Medical Day Care unit. Lighting Layout.	Luminaire schedule to be submitted to review light fittings for suitability. No circuiting or control information to review level of local switching / automatic control. Circuiting and control information to be shown. Sample calculations to be submitted to demonstrate normal and emergency lighting levels.	C
ME-Z4-03-PL-541-417	2	Third Floor Plan. Surgical Long Stay Inpatients. Lighting Layout.	Luminaire schedule to be submitted to review light fittings for suitability. No circuiting or control information to review level of local switching / automatic control. Circuiting and control information to be shown. Sample calculations to be submitted to demonstrate normal and emergency lighting levels.	C
ME-Z4-04-PL-541-404	2	Fourth Floor Plan. Clinical / Management Suite Department. Lighting Layout.	Luminaire schedule to be submitted to review light fittings for suitability. No circuiting or control information to review level of local switching / automatic control. Circuiting and control information to be shown. Sample calculations to be submitted to demonstrate normal and emergency lighting levels.	C

Drawing Reference	Rev	Drawing Title	Comment	Drawing Status
ME-Z4-04-PL-541-406	2	Third Floor Plan. Child Life & Health Department. Lighting Layout.	Luminaire schedule to be submitted to review light fittings for suitability. No circuiting or control information to review level of local switching / automatic control. Circuiting and control information to be shown. Sample calculations to be submitted to demonstrate normal and emergency lighting levels.	C
~~ME-SZ-B1-PL-572-002~~ **ME-SZ-B1-PL-572-001**	3	Basement Floor Plan - Layout of Fire Alarm Panels	Fire compartments and fire zones to be identified. The Fire Alarm Design is required to indicate extent and type of detector coverage (e.g. smoke, heat, beam, vesda etc.), interfacing to devices e.g. door hold opens etc. extent of ceiling void coverage etc.	C
~~ME-SZ-00-PL-572-002~~ **ME-SZ-00-PL-572-001**	3	Ground Floor Plan - Layout of Fire Alarm Panels	Fire compartments and fire zones to be identified. Fire Alarm Design required to indicate extent and type of detector coverage (e.g. smoke, heat, beam, vesda etc.), interfacing to devices e.g. door hold opens etc. extent of ceiling void coverage etc.	C
~~ME-SZ-01-PL-572-002~~ **ME-SZ-01-PL-572-001**	3	First Floor Plan - Layout of Fire Alarm Panels	Fire compartments and fire zones to be identified. The Fire Alarm Design is required to indicate extent and type of detector coverage (e.g. smoke, heat, beam, vesda etc.), interfacing to devices e.g. door hold opens etc. extent of ceiling void coverage etc.	C
~~ME-SZ-02-PL-572-002~~ **ME-SZ-02-PL-572-001**	3	Second Floor Plan - Layout of Fire Alarm Panels	Fire compartments and fire zones to be identified. The Fire Alarm Design is required to indicate extent and type of detector coverage (e.g. smoke, heat, beam, vesda etc.), interfacing to devices e.g. door hold opens etc. extent of ceiling void coverage etc.	C
~~ME-SZ-03-PL-572-002~~ **ME-SZ-03-PL-572-001**	3	Third Floor Plan - Layout of Fire Alarm Panels	Fire compartments and fire zones to be identified. The Fire Alarm Design is required to indicate extent and type of detector coverage (e.g. smoke, heat, beam, vesda etc.), interfacing to devices e.g. door hold opens etc. extent of ceiling void	C

Drawing Reference	Rev	Drawing Title	Comment	Drawing Status
			coverage etc.	
~~ME-SZ-04-PL-572-002~~ **ME-SZ-04-PL-572-001**	3	Fourth Floor Plan - Layout of Fire Alarm Panels	Fire compartments and fire zones to be identified. The Fire Alarm Design is required to indicate extent and type of detector coverage (e.g. smoke, heat, beam, vesda etc.), interfacing to devices e.g. door hold opens etc. extent of ceiling void coverage etc.	C
ME-XX-XX-SC-572-001	**2**	**Fire Alarm Schematic**	Identify location of RIE Fire Alarm Control Panel. Add legend to drawing giving a description of the devices and how they operate. Confirm if inputs and outputs on the same I/O device or only one way communication on each leg	C
ME-XX-XX-SC-572-002	**2**	**Fire Alarm Interface Schematic**	Note 3 may not comply with BS5839 for a phased evacuation system – IHSL to review and confirm/address. Any interfaces to Smoke Extract Panels of Fire Dampers to be shown. Schematic is generic and a legend required to be provided for symbols. Please explain what the numbers are beside each panel and how they relate to the drawings. Local / Repeater panels to be indicated on schematic.	C
WW-SZ-B1-PL-581-001	1	Level B1 – Drainage Strategy	Co-ordination of highly serviced areas (section drawings) to be developed	C
WW-Z2-00-PL-581-001	1	Zone Z2 – Level 00 – Drainage Strategy	Co-ordination of highly serviced areas (section drawings) to be developed	C
WW-Z3-00-PL-581-001	1	Zone Z3 – Level 00 – Drainage Strategy Sheet 1 of 2	Co-ordination of highly serviced areas (section drawings) to be developed	C
WW-Z3-00-PL-581-002	1	Zone Z3 – Level 00 – Drainage Strategy Sheet 2 of 2	Co-ordination of highly serviced areas (section drawings) to be developed	C
WW-Z4-00-PL-581-001	1	Zone Z4 – Level 00 – Drainage Strategy - Sheet 1 of 2	Co-ordination of highly serviced areas (section drawings) to be developed	C

Drawing Reference	Rev	Drawing Title	Comment	Drawing Status
WW-Z4-00-PL-581-002	1	Zone Z4 – Level 00 – Drainage Strategy - Sheet 2 of 2	Co-ordination of highly serviced areas (section drawings) to be developed	C
WW-Z5-00-PL-581-001	1	Zone Z5 (Energy Centre) – Level 00 – Drainage Strategy	Co-ordination of highly serviced areas (section drawings) to be developed	C
WW-Z2-01-PL-581-001	1	Zone Z2 – Level 01 – Drainage Strategy	Co-ordination of highly serviced areas (section drawings) to be developed	C
WW-Z3-01-PL-581-001	1	Zone Z3 – Level 01 – Drainage Strategy Sheet 1 of 2	Co-ordination of highly serviced areas (section drawings) to be developed	C
WW-Z3-01-PL-581-002	1	Zone Z3 – Level 01 – Drainage Strategy Sheet 2 of 2	Co-ordination of highly serviced areas (section drawings) to be developed	C
WW-Z4-01-PL-581-001	1	Zone Z4 – Level 01 – Drainage Strategy - Sheet 1 of 2	Co-ordination of highly serviced areas (section drawings) to be developed	C
WW-Z4-01-PL-581-002	1	Zone Z4 – Level 01 – Drainage Strategy - Sheet 2 of 2	Co-ordination of highly serviced areas (section drawings) to be developed	C
WW-Z5-01-PL-581-001	1	Zone Z5 (Energy Centre) – Level 01 – Drainage Strategy	Co-ordination of highly serviced areas (section drawings) to be developed	C
WW-Z2-02-PL-581-001	1	Zone Z2 – Level 02 – Drainage Strategy	Co-ordination of highly serviced areas (section drawings) to be developed	C
WW-Z3-02-PL-581-001	1	Zone Z3 – Level 02 – Drainage Strategy Sheet 1 of 2	Co-ordination of highly serviced areas (section drawings) to be developed	C
WW-Z3-02-PL-581-002	1	Zone Z3 – Level 02 – Drainage Strategy Sheet 2 of 2	Co-ordination of highly serviced areas (section drawings) to be developed	C
WW-Z4-02-PL-581-001	1	Zone Z4 – Level 02 – Drainage Strategy - Sheet 1 of 2	Co-ordination of highly serviced areas (section drawings) to be developed	C
WW-Z4-02-PL-581-002	1	Zone Z4 – Level 02 – Drainage Strategy - Sheet 2 of 2	Co-ordination of highly serviced areas (section drawings) to be developed	C

Drawing Reference	Rev	Drawing Title	Comment	Drawing Status
WW-Z5-02-PL-581-001	1	Zone Z5 (Energy Centre) – Level 02 – Drainage Strategy	Co-ordination of highly serviced areas (section drawings) to be developed	C
WW-Z2-03-PL-581-001	1	Zone Z2 – Level 03 – Drainage Strategy	Co-ordination of highly serviced areas (section drawings) to be developed	C
WW-Z4-03-PL-581-001	1	Zone Z3 – Level 03 – Drainage Strategy Sheet 1 of 2	Co-ordination of highly serviced areas (section drawings) to be developed	C
WW-Z4-03-PL-581-002	1	Zone Z3 – Level 03 – Drainage Strategy Sheet 2 of 2	Co-ordination of highly serviced areas (section drawings) to be developed	C
WW-Z3-03-PL-581-001	1	Zone Z4 – Level 03 – Drainage Strategy - Sheet 1 of 2	Co-ordination of highly serviced areas (section drawings) to be developed	C
WW-Z3-03-PL-581-002	1	Zone Z4 – Level 03 – Drainage Strategy - Sheet 2 of 2	Co-ordination of highly serviced areas (section drawings) to be developed	C
WW-Z2-04-PL-581-001	1	Zone Z2 – Level 04 – Drainage Strategy	Co-ordination of highly serviced areas (section drawings) to be developed	C
WW-Z3-04-PL-581-001	1	Zone Z3 – Level 04 – Drainage Strategy - Sheet 1 of 2	Co-ordination of highly serviced areas (section drawings) to be developed	C
WW-Z3-04-PL-581-002	1	Zone Z3 – Level 04 – Drainage Strategy - Sheet 2 of 2	Co-ordination of highly serviced areas (section drawings) to be developed	C
WW-Z4-04-PL-581-001	1	Zone Z4 – Level 04 – Drainage Strategy- Sheet 1 of 2	Co-ordination of highly serviced areas (section drawings) to be developed	C
WW-Z4-04-PL-581-002	1	Zone Z4 – Level 04 – Drainage Strategy- Sheet 2 of 2	Co-ordination of highly serviced areas (section drawings) to be developed	C
WW-Z2-05-PL-581-001	1	Zone Z2 – Level 05 (Roof) – Drainage Strategy	Co-ordination of highly serviced areas (section drawings) to be developed	C
WW-Z3-05-PL-581-001	1	Zone Z3 – Level 05 (Roof) – Drainage Strategy - Sheet 1 of 2	Co-ordination of highly serviced areas (section drawings) to be developed	C

Drawing Reference	Rev	Drawing Title	Comment	Drawing Status
WW-Z3-05-PL-581-002	1	Zone Z3 – Level 05 (Roof) – Drainage Strategy - Sheet 2 of 2	Co-ordination of highly serviced areas (section drawings) to be developed	C
WW-Z4-05-PL-581-001	1	Zone Z4 – Level 05 (Roof) – Drainage Strategy- Sheet 1 of 2	Co-ordination of highly serviced areas (section drawings) to be developed	C
WW-Z4-05-PL-581-002	1	Zone Z4 – Level 05 (Roof) – Drainage Strategy- Sheet 2 of 2	Co-ordination of highly serviced areas (section drawings) to be developed	C
WW-XX-XX-SC-500-001	1	Domestic Water Services Schematic	Energy centre connection should not be branched off wards and departments – IHSL to address. Steam plant connection shown – none in the project. IHSL to revise Helipad fire fighting systems connected to metered domestic water system – this does not appear correct – IHSL to review	C
WW-XX-XX-SC-500-002	1	Landscape/Plants/Window Cleaning Water Concept Schematic	Internal IV required to MDCU terrace Water meter shown on the outlet rather than inlet, IHSL to revise	C
WW-Z2-XX-SC-572-001	1	Dry riser zone 2 system schematic & details	No detail of dry riser outlet box	C
WW-SZ-XX-SC-572-001	1	Dry riser zone 3 and zone 4 system schematic & details	IHSL to confirm fill time for stair 01 & 02 system is acceptable to Fire & Rescue Services Ground floor plan old version, refer stair 01 location – IHSL to update XREF and address any required changes No detail of dry riser outlet box	C
WW-SZ-B1-PL-572-001	1	Level B1 - Dry Riser Layout	Co-ordination of highly serviced areas (section drawings) to be developed	C
WW-SZ-00-PL-572-001	1	Level 00 - Dry Riser Layout	Co-ordination of highly serviced areas (section drawings) to be developed	C
WW-SZ-01-PL-572-001	1	Level 01 - Dry Riser Layout	Co-ordination of highly serviced areas (section drawings) to be developed	C
WW-SZ-02-PL-572-001	1	Level 02 - Dry Riser Layout	Co-ordination of highly serviced areas (section drawings) to be	C

Drawing Reference	Rev	Drawing Title	Comment	Drawing Status
			developed	
WW-SZ-03-PL-572-001	1	Level 03 - Dry Riser Layout	Co-ordination of highly serviced areas (section drawings) to be developed	C
WW-SZ-04-PL-572-001	1	Level 04 - Dry Riser Layout	Co-ordination of highly serviced areas (section drawings) to be developed	C
~~WW-SZ-SL-500-001~~ WW-SZ-SL-DT-500-001	1	Touch Down Base; MEP Services	General comment – The drawings do not provide the level of detail expected. Please show loaded plans for co-ordination. Drawing to include type of elements i.e. type of grilles, lights, switches, fire alarms etc. as well as detailing services distribution in the room i.e. pipework and containment runs and how services will be concealed (boxing, IPS, in voids etc.) A number of other issues identified. Non-exhaustive items to be addressed include – Legend to be completed IHSL to confirm what an affray alarm is and confirm required 2 symbols for radiant panel - address	C
~~WW-SZ-SL-500-002~~ WW-SZ-SL-DT-500-002	1	Adult Single Bedroom with Ensuite; MEP Services	See Touch Down Base general comments. A number of other issues identified. Non-exhaustive items to be addressed include – Disabled refuge alarm in en-suite is not correct Radiant panel in en-suite not on environmental matrix. Bedroom radiant panel seems very large. Nurse call to be shown. Light switch shown as 1 way – not correct. Lightswitch shown for en-suite, environmental matrix shows this as presence detection Two different symbols for dual data	C

Drawing Reference	Rev	Drawing Title	Comment	Drawing Status
			point.	
~~WW-SZ-SL-500-003~~ WW-SZ-SL-DT-500-003	1	Paediatric Single Bedroom with Ensuite MEP Services	See Touch Down Base general comments. A number of other issues identified. Non-exhaustive items to be addressed include – Disabled refuge alarm in en-suite is not correct. Radiant panel in en-suite not on environmental matrix. Bedroom radiant panel seems very large. Nurse call to be shown Light switch shown as 1 way – not correct. Lightswitch shown for en-suite, environmental matrix shows this as presence detection. Two different symbols for dual data point. Confirm location of TV point is correct IRR in en-suite not on legend. Items "A" not on legend	C
~~WW-SZ-SL-500-004~~ WW-SZ-SL-DT-500-004	1	Paediatric Four Bedded room; MEP Services	See Touch Down Base general comments. A number of other issues identified. Non-exhaustive items to be addressed include – Disabled refuge alarm in en-suite is not correct. Radiant panel in en-suite not on environmental matrix. Nurse call to be shown. Light switch shown as 1 way. Lightswitch shown for en-suite, environmental matrix shows this as presence detection. Two different symbols for dual data point. Items "A" outside doors not on legend	C
~~WW-SZ-SL-500-005~~ WW-SZ-SL-DT-500-005	1	Clean Utility Out Patient Department MEP Services	See Touch Down Base general comments.	C

Drawing Reference	Rev	Drawing Title	Comment	Drawing Status
			A number of other issues identified. Non-exhaustive items to be addressed include – Light switch shown, environmental matrix states presence detection. . Confirm which is correct to Board agreement.	
~~WW-SZ-SL-500-006~~ WW-SZ-SL-DT-500-006	1	Clean Utility In-patients MEP Services	See Touch Down Base general comments. A number of other issues identified. Non-exhaustive items to be addressed include – Light switch shown, environmental matrix states presence detection. Confirm which is correct to Board agreement.	C
~~WW-SZ-SL-500-007~~ WW-SZ-SL-DT-500-007	1	Typical Staff Base MEP Services	See Touch Down Base general comments. A number of other issues identified. Non-exhaustive items to be addressed include – IRR to be added to legend IHSL to confirm if voice outlet is a single data point in Cat 6A.	C
~~WW-SZ-SL-500-008~~ WW-SZ-SL-DT-500-008	1	Typical Reception MEP Services	See Touch Down Base general comments. A number of other issues identified. Non-exhaustive items to be addressed include – PIL to be added to legend Environmental matrix does not have extract at reception, Environmental matrix has radiant panel at reception, IHSL to confirm and revise proposals.	C
~~WW-SZ-SL-500-009~~ WW-SZ-SL-DT-500-009	1	Typical Dirty Utility MEP Services	See Touch Down Base general comments. A number of other issues identified. Non-exhaustive items to be addressed include – Environmental matrix does not have	C

Drawing Reference	Rev	Drawing Title	Comment	Drawing Status
			radiant panel in dirty utility. IHSL to confirm and revise proposals.	
~~WW-SZ-SL-500-010~~ WW-SZ-SL-DT-500-010	1	Typical Operating Theatre MEP Services	See Touch Down Base general comments. A number of other issues identified. Non-exhaustive items to be addressed include – Surgeons panel to be shown Access to scrub area should not have door. Operating light and pendants to be indicated. IPS sockets need symbol	C
~~WW-SZ-SL-500-011~~ WW-SZ-SL-DT-500-011	1	Typical MRI/X-Ray Room MEP Services	See Touch Down Base general comments. A number of other issues identified. Non-exhaustive items to be addressed include – Chilled water cassette in centre of room will be directly over the medical equipment, this is not acceptable – IHSL to review IHSL to confirm Pushbutton is an EPO	C
~~WW-SZ-SL-500-012~~ WW-SZ-SL-DT-500-012	1	Typical Treatment Room MEP Services	See Touch Down Base general comments. A number of other issues identified. Non-exhaustive items to be addressed include – Staff call system to be shown. Cleaners socket to be shown. Environmental Matrix does not have extract in treatment rooms. IHSL to confirm and revise proposals. Examination light to be shown	C
WW-EW-XX-PL-716-001	1	External Lighting Layout	Appears there will be light pollution from uplighters. IHSL to confirm that light pollution will not occur Feeder pillar to be defined Schematic details and circuit references to be provided	C
WW-EC-00-PL-500-001	1	Energy Centre – Ground		C

Drawing Reference	Rev	Drawing Title	Comment	Drawing Status
		Floor Plan	Noted complete drawing to be re-worked to accommodate the revised flue proposal and add the CHP Buffer Vessel Otherwise, generally, the drawing shows a reasonable level of information with relevant labelling and information, including sections Schedule of plant and sizes to be developed in line with the design progression HV cable routes to be fully identified to demonstrate segregation to avoid single points of failure. Equipment/Plant access and egress to be reviewed particularly at HV switchrooms. What level of risk is there of an explosion at the VIE plant which could damage the main HV Switchgear taking out the whole hospital electrical supply? IHSL to address	
WW-EC-01-PL-500-001	1	Energy Centre – Mezzanine Floor Plan	Schedule of plant and sizes to be developed in line with the design progression Equipment access and egress to be reviewed particularly at UPS and Batteries area (cat ladder provision only does not appear suitable, what about plant replacement etc.). Number of issues to be reviewed and addressed to the Board's satisfaction – - Does battery ventilation comply with BS EN 50272-2? - Have the weights of the batteries and UPS been considered? - Will water and drainage be provided? - If so drains will run through HV Switchrooms?	C
WW-SZ-B1-PL-591-001	1	Energy Centre Link & Basement Plant Layout Mezzanine Floor Plan	HV cable route 2 does not align with drawing WW-EC-00-PL-500-001	C
~~WW-SZ-XX-DT-600-001~~ WW-SZ-SL-DT-600-001	1	1:50 Typical Sections Sheet 1 of 2	Too generic.	C

Drawing Reference	Rev	Drawing Title	Comment	Drawing Status
			No legend Not all services shown e.g. drainage/PTS and PTS diverter boxes Pipework zone above electrical services – this is not good practice. IHSL to review	
~~WW-SZ-XX-DT-600-002~~ WW-SZ-SL-DT-600-002	1	1:50 Typical Sections Sheet 2 of 2	Too generic. No legend Not all services shown e.g. drainage/PTS and PTS diverter boxes Pipework zone above electrical services – this is not good practice. IHSL to review	C
WW-SZ-B1-533-002	1	Level B1 Power Metering Drawings	Drawings are too generic and do not provide enough detail	C
WW-SZ-00-533-002	1	Level 00 Power Metering Drawing	Drawings are too generic and do not provide enough detail Paediatric Dentistry and Social work appear to be combined. IHSL to show how circulation spaces are treated	C
WW-SZ-01-533-002	1	Level 01 Power Metering Drawing	Drawings are too generic and do not provide enough detail Some minor departments have been merged	C
WW-SZ-02-533-002	1	Level 02 Power Metering Drawing	Drawings are too generic and do not provide enough detail Some minor departments have been merged	C
WW-SZ-03-533-002	1	Level 03 Power Metering Drawing	Drawings are too generic and do not provide enough detail	C
WW-SZ-04-533-002	1	Level 04 Power Metering Drawing	Drawings are too generic and do not provide enough detail	C
WW-SZ-B1-500-002	1	Level B1 Water Metering Drawing	Drawings are too generic and do not provide enough detail	C
WW-SZ-00-500-002	1	Level 00 Water Metering Drawing	DHW meter can only be on CWS supply to heat station calorifiers. Metering is not in line with the BCRs which states - “Project Co shall allow sub-metering of electricity, heating and domestic	C

Drawing Reference	Rev	Drawing Title	Comment	Drawing Status
			water usage for each individual department / unit". IHSL to amend drawing to suit	
WW-SZ-01-500-002	1	Level 01 Water Metering Drawing	DHW meter can only be on CWS supply to heat station calorifiers. Metering is not in line with the BCRs which states - "Project Co shall allow sub-metering of electricity, heating and domestic water usage for each individual department / unit". IHSL to amend drawing to suit	C
WW-SZ-02-500-002	2	Level 02 Water Metering Drawing	DHW meter can only be on CWS supply to heat station calorifiers. Metering is not in line with the BCRs which states - "Project Co shall allow sub-metering of electricity, heating and domestic water usage for each individual department / unit". IHSL to amend drawing to suit	C
WW-SZ-03-500-002	1	Level 03 Water Metering Drawing	DHW meter can only be on CWS supply to heat station calorifiers. Metering is not in line with the BCRs which states - "Project Co shall allow sub-metering of electricity, heating and domestic water usage for each individual department / unit". IHSL to amend drawing to suit	C
WW-SZ-04-500-002	1	Level 04 Water Metering Drawing	DHW meter can only be on CWS supply to heat station calorifiers. Metering is not in line with the BCRs which states - "Project Co shall allow sub-metering of electricity, heating and domestic water usage for each individual department / unit". IHSL to amend drawing to suit	C
WW-SZ-B1-521-002	1	Level B1 Heating Metering	Metering is not in line with the BCRs	C

Drawing Reference	Rev	Drawing Title	Comment	Drawing Status
		Drawing	which states – "Project Co shall allow sub-metering of electricity, heating and domestic water usage for each individual department / unit". IHSL to amend drawing to suit	
WW-SZ-00-521-002	1	Level 00 Heating Metering Drawing	Metering is not in line with the BCRs which states – "Project Co shall allow sub-metering of electricity, heating and domestic water usage for each individual department / unit". IHSL to amend drawing to suit	C
WW-SZ-01-521-002	1	Level 01 Heating Metering Drawing	Metering is not in line with the BCRs which states – "Project Co shall allow sub-metering of electricity, heating and domestic water usage for each individual department / unit". IHSL to amend drawing to suit	C
WW-SZ-02-521-002	1	Level 02 Heating Metering Drawing	Metering is not in line with the BCRs which states – "Project Co shall allow sub-metering of electricity, heating and domestic water usage for each individual department / unit". IHSL to amend drawing to suit	C
WW-SZ-03-521-002	1	Level 03 Heating Metering Drawing	Metering is not in line with the BCRs which states – "Project Co shall allow sub-metering of electricity, heating and domestic water usage for each individual department / unit". IHSL to amend drawing to suit	C
WW-SZ-04-521-002	1	Level 04 Heating Metering Drawing	Metering is not in line with the BCRs which states – "Project Co shall allow sub-metering of electricity, heating and domestic water usage for each individual department / unit".	C

Drawing Reference	Rev	Drawing Title	Comment	Drawing Status
			IHSL to amend drawing to suit	
ME-XX-B1-PL-700-001	3	Basement Floor Plan. Existing Building RIE Connections	Drawing to be clear where cables will run in the building i.e. void or high level	C
ME-XX-00-PL-700-001	3	Ground Floor Plan. Existing Building.RIE Connections	PTS pipework size to be shown Section detail drawings to be provided to show co-ordination in highly serviced areas Further notes/a legend to be provided to confirm meaning of services (ie what are the shaded green boxes adjacent to stairs) Confirmation of new access hatch requirement in existing RIE required	C
ME-XX-01-PL-700-001	2	First Floor Plan. Existing Building.RIE Connections	PTS pipework size to be shown Section detail drawings to be provided to show co-ordination in highly serviced areas Further notes/a legend to be provided to confirm meaning of services (ie what are the shaded green boxes adjacent to stairs)	C
ME-XX-02-PL-700-001	2	Second Floor Plan. Existing Building.RIE Connections	All PTS pipework size to be shown Section detail drawings to be provided to show co-ordination in highly serviced areas XREF to be made all one colour, difficult to review with multiple colours on the XREF. Drawing to be clear what clouds mean? Are these from the XREF and as such should be removed?	C
ME-XX-03-PL-700-001	2	Third Floor Plan. Existing Building.RIE Connections	All PTS pipework size to be shown	C
RBG-SZ-B1-PL-200-001	01	Basement Loading Plan	Comments related to structural aspects 1. Insufficient information provided to adequately review the proposed surcharge loading.	C

Drawing Reference	Rev	Drawing Title	Comment	Drawing Status
			2. Remove note subject to confirming specific clinical equipment loads.	
RBG-SZ-00-PL-200-001	01	Ground Floor Loading Plan	Comments related to structural aspects 1. Insufficient information provided to adequately review the proposed surcharge loading. 2. Remove note subject to confirming specific clinical equipment loads.	C
RBG-SZ-01-PL-200-001	01	First Floor Loading Plan	Comments related to structural aspects 1. Remove note subject to confirming specific clinical equipment loads.	C
RBG-SZ-02-PL-200-001	01	Second Floor Loading Plan	Comments related to structural aspects 1. Remove note subject to confirming specific clinical equipment loads.	C
RBG-SZ-03-PL-200-001	01	Third Floor Loading Plan	Comments related to structural aspects 1. Remove note subject to confirming specific clinical equipment loads.	C
RBG-SZ-04-PL-200-001	01	Fourth Floor Loading Plan	Comments related to structural aspects 1. Remove note subject to confirming specific clinical equipment loads.	C
RBG-SZ-05-PL-200-001	01	Fifth Floor Loading Plan	Comments related to structural aspects 1. Remove note subject to confirming specific clinical equipment loads. 2. Insufficient information provided to adequately review the proposed helicopter loading.	C
RBG-SZ-SL-PL-210-101	02	Pile Layout GA	1. We appreciate that this drawing is not a final design. However, our	C

Drawing Reference	Rev	Drawing Title	Comment	Drawing Status
			comments are valid at this stage. Schedule of pile numbers with noted currently proposed pile diameters and pile cut off levels has not been provided. 2. We appreciate that this drawing is not a final design. However, our comments are valid at this stage. Piles in some pile group appear to be closely spaced (relevant piles references were highlighted-referenced as per comments numbers 4 to 41, 43 to 58, 60 to 110, 112 to 114, 116 to 127, 129 to 149, 151 to 160, 162, 164 to 189, 191 to 204 shown on the appended drawing “RBG-SZ-SL-PL-210-101-Comments-Geotechnical”). We understand that pile group analysis will be undertaken at the detailed design stage in order to take into account the pile group effects. We will require to see evidence of pile group analysis. 3. We appreciate that this drawing is not a final design. However, our comments are valid at this stage. We note that use of large diameter piles is proposed where single piles are used under columns. Single pile per column is a non-redundant configuration to account for quality and performance issues. Therefore, quality control and assurance during construction and pile testing to verify pile performance will be of great importance. Currently the pile testing proposals are unknown. 42. No pile reference is provided. 59. No pile reference is provided. 111. We appreciate that this drawing is not a final design. However, our comments are valid at this stage. We note that the pile P436 appears to be located closely to the pile wall. We assume that construction	

Drawing Reference	Rev	Drawing Title	Comment	Drawing Status
			tolerances will be maintained on site in order to avoid pile clashing. We also assume that the influence from the pile load onto the pile wall will be assessed in order to ensure that it will not have an adverse effect onto the performance of the pile wall, and in reverse. 115. It is noted in the Piling Specification that the pile design is to be undertaken in accordance with Eurocode 7. However, the pile loads are not set out in permanent and variable load components, as per Eurocode requirements. 128. Orientation of specified load is not clear. 150. 1180mm pile diameter is a non-commonly used pile diameter for bored cast in-situ piles. 161. Loads for pile group design should be provided. Piling Specification indicates that the piling contractor will be responsible for all aspects of pile design. We assume that this includes design of pile configurations below the proposed buildings and their interaction with the adjacent buildings. 163. The table should also contain details of lateral and tension pile loads. 190. No legend provided for this symbol. This should be added to the drawing. 206. Shallower than 2.0m depth ground water levels were recorded during water monitoring, as reported in the factual ground investigation reports. 207. Pile symbol not explained on the drawing legend.	

Drawing Reference	Rev	Drawing Title	Comment	Drawing Status
			208. Pile references are not shown. These should be added to the drawing. 209. Smaller than 3.0m Glacial Till thicknesses were recorded on site. 210. Shallower rockhead s than the ones presented on the typical ground profile were recorded on site. 211. Siltone rock was also recoded on site. 212. It is unclear if this ground model represents the best or the worst ground conditions on site. We note that ground conditions are variable. 213. It is understood that contiguous pile wall is proposed. This type of wall is generally used to retain firm/stiff cohesive soils. The soils on site include granular deposits, soft clays and peat. This causes some concern in terms of suitability of the proposed wall type due to loss of material between the piles due to the ground conditions on site.	
RBG-SZ-B1-PL-260-101	03	Basement GA Plan	Comments related to structural aspects 1. Remove note subject to confirmation that vibration analysis has been carried out on the design of slabs and beams. We require this information to be final. 2. Caltite waterproof concrete specified elsewhere to be specified here also. 3. Review dimensions of dowels and amend accordingly. 4. Provision of gas protection to CS2 is noted and welcomed, however, the detail provided contradicts the	C

Drawing Reference	Rev	Drawing Title	Comment	Drawing Status
			PCP and CGL letter. No mention of radon protection provided as per the PCP and CGL letter. 5. It is understood that contiguous pile wall is proposed. This type of wall is generally used to retain firm/stiff cohesive soils. The soils on site include granular deposits, soft clays and peat. This causes some concern in terms of suitability of the proposed wall type due to loss of material between the piles due to the ground conditions on site.. 6. It is unclear if the space between the concrete wall and pile wall will be backfilled. Details of backfill material were not provided. 7. Drawings showing section information to be provided in addition.	
RBG-SZ-00-PL-260-101	03	Ground Floor GA Plan Sheet 1	Comments related to structural aspects 1. Remove note subject to confirmation that vibration analysis has been carried out on the design of slabs and beams. We require this information to be final. 2. Drawings showing section information to be provided in addition. 3. The wall corner is not supported by a pile. We would normally expect wall corners to be directly supported by piles. 4. Pile Located away from the corner of the wall. We would normally expect piles to support wall corners. 5. Provision of gas protection to CS2 is noted and welcomed, however, the detail provided contradicts the PCP and CGL letter. No mention of radon protection provided as per the PCP and CGL letter.	C

Drawing Reference	Rev	Drawing Title	Comment	Drawing Status
			6. It is understood that contiguous pile wall is proposed. This type of wall is generally used to retain firm/stiff cohesive soils. The soils on site include granular deposits, soft clays and peat. This causes some concern in terms of suitability of the proposed wall type due to loss of material between the piles due to the ground conditions on site. 5. End of the wall not supported by a pile. We would normally expect a pile to be located under the end of the wall.	
RBG-SZ-00-PL-260-102	03	Ground Floor GA Plan Sheet 2	Comments related to structural aspects 1. Insufficient information to ascertain the detail and intent. 2. Drawings showing section information to be provided in addition. 3. Information on waterproofing, gas protection and dewatering is not included. 4. It is unclear what foundation solution is to be adopted for the retaining wall. We would expect the retaining wall to be piled, taking into account the ground conditions on site.	C
RBG-SZ-01-PL-260-101	03	First Floor GA Plan	1. Comments related to structural aspects Insufficient information to ascertain the detail and intent 2. Remove note subject to confirmation that vibration analysis has been carried out on the design of slabs and beams. We require this information to be final. Drawings showing section information to be provided in addition.	C
RBG-SZ-02-PL-260-101	03	Second Floor GA Plan	Comments related to structural	C

Drawing Reference	Rev	Drawing Title	Comment	Drawing Status
			aspects 1. Remove note subject to confirmation that vibration analysis has been carried out on the design of slabs and beams. We require this information to be final. 3. Drawings showing section information to be provided in addition.	
RBG-SZ-03-PL-260-101	03	Third Floor GA Plan	Comments related to structural aspects 1. Remove note subject to confirmation that vibration analysis has been carried out on the design of slabs and beams. We require this information to be final. 2. Insufficient information to ascertain the detail and intent. 2. . Drawings showing section information to be provided in addition.	C
RBG-SZ-04-PL-260-101	02	Fourth Floor GA Plan	Comments related to structural aspects 1. Remove note subject to confirmation that vibration analysis has been carried out on the design of slabs and beams. We require this information to be final. 2. Drawings showing section information to be provided in addition.	C
RBG-SZ-05-PL-260-101	02	Fifth Floor GA Plan	Comments related to structural aspects 1. Remove note subject to confirmation that vibration analysis has been carried out on the design of slabs and beams. We require this information to be final. 2. Insufficient information to ascertain the detail and intent. 3. Drawings showing section	C

Drawing Reference	Rev	Drawing Title	Comment	Drawing Status
			information to be provided in addition. Structural steelwork plan, details and sections to be provided. If an additional drawing is required then this is to be added to the list of drawings.	
RBG-SZ-SL-SE-260-001	01	Substructure Sections and Details Sheet 1	1. Provision of gas protection to CS2 is noted and welcomed, however, the detail provided contradicts the PCP and CGL letter. No mention of radon protection provided as per the PCP and CGL letter. 2. Deeper pile cap is proposed for 1200mm diameter pile than for the 1000mm diameter pile. This appear illogical between one single pile cap and another. 3. Pile diameter inconsistent with the diameters referenced on the Pile Layout GA Plan (RBG-S2-SL-PL-210-101).	C
RBG-SZ-SL-SE-260-002	01	Substructure Sections and Details Sheet 2	1. Provision of gas protection to CS2 is noted and welcomed, however, the detail provided contradicts the PCP and CGL letter. No mention of radon protection provided as per the PCP and CGL letter.	C
RBG-SZ-SL-SE-260-010	01	Superstructure Sections and Details Sheet 1	Comments related to structural aspects 1. Insufficient information to adequately review details. 2. As the Board is unable to determine from the drawing submitted the extent and location of proposed transfer beams, beams will only be allowed at the absolute discretion of the Board Full extent and detail of proposed gas membrane to be provided. If an additional drawing is to be provided to cover this then drawing number to be added to PCP list.	C
RBG-XX-XX-PL-XXX-000		Cover Sheet		
RBG-SZ-00-PL-711-001	03	Pavement Plan Sheet 1	Points 1 & 3 - What happens to this section of car park that is outwith the	C

Drawing Reference	Rev	Drawing Title	Comment	Drawing Status
			site boundary? Do finishes match with proposed permeable paving? 1. Reference should be made to Note 7 and table below, relevant to CBR testing. 2. Reference should be made to Note 7 and table below, relevant to CBR testing. 3. Assumed CBR values are not provided for other details. 4. Frequency of CBR testing was not specified. 5. It is not clear to which detail this table refers. No table number was provided. 6. Founding conditions below the kerb are not clearly defined. 7. Founding conditions below the kerb are not clearly defined. 8. Founding conditions below the kerb are not defined. 9. Dimensions and legend for this detail are incomplete. Material thickness and type below the foundation are not clearly specified. 10. Founding conditions below the kerb are not defined. 11. It is unclear what this line represents. 12. Founding conditions below the kerb are not defined. 13. Material types and thicknesses below the kerb are not clearly specified.	

Drawing Reference	Rev	Drawing Title	Comment	Drawing Status
RBG-SZ-00-PL-711-002		Pavement Plan Sheet 2	Not received	
RBG-SZ-00-PL-711-003		Pavement Plan Sheet 3	Not received	
RBG-SZ-00-DT-711-001	03	Pavement Details Sheet 1	Points 1 & 2 - Should be note 7 Point 3 - General note - No kerbing layout supplied. Point 4 - General note - no levels layout supplied	C
RBG-SZ-00-DT-714-010	02	Early Works - Road Works Details	Point 1 – Are 'bus boarder' type kerbs required? 1. No comments on ground CBR values assumed in the design were provided. 2. No details of sub-base design were provided. 3. No details of sub-base design were provided	C
RBG-SZ-00-PL-714-001	03	Early Works - Bus Layby Road Works Plan	Point 1 - Should typical 'bus boarder' type kerbs be used at bus access/egress points	C
RBG-SZ-00-PL-770-100	06	Surface Water Underground Drainage Plan Sheet 1	Point 1 - Secondary Surface Water Pipe runs under corner of the building. This needs to be adjusted on the drawing. Point 2 - Where does this slot drain (SD) connect to? Point 3 - Drawing reference incorrect. Think it should be RBG-SZ-00-DT-770-001 TO 004 Point 4 - Note not clear. what is meant by 'flat lateral connections to be 135 "Y" junction'. Point 5 - This note conflicts with the Standard Detail Drawing RBG-SZ-00-DT-770-001 REV03 -Typical Manhole Detail Type A & B. Point 6 - Location of proposed Oil/Water Separator. See Foul system drawing for detail. Point 7 - Direction arrows shown on the Legend for the Proposed & Secondary Surface Water sewer is not shown on the drawing. Point 8 - Figure B15 reference is incorrect this is not the backdrop	C

Drawing Reference	Rev	Drawing Title	Comment	Drawing Status
			detail in Sewers for Scotland 2nd Ed. Reference should be Figure 16. Point 9 - Location of possible pipe clash between Surface Water and Foul drainage. Point 10 - Is Drawing reference correct? Point 11 - Slot drains through the permeable paving. This would appear to by-pass the SUDs treatment provided by the paving. Also this would be bedded directly on the create storage units. How does this work? (This note applies to all slot drains (SD) and Channel drains (CD) across the site.) Point 12 - The Legend does not identify the different type of proposed manhole and inspection chambers that are shown on the drawing. The legend should be updated to show this. Point 13 - Secondary Surface Water Channel Drain (CD-0) will be bedded directly on the create storage units. Some detail required to show how this will work. (This note applies to all channel drains (CD-0) across the site based in cellular storage areas.) Point 14 - This 'G' does not seem attached to any gully. Point 15 - Where does this slot drain (SD) connect to? Point 16 - Depth of Attenuation System PP1 is 0.45 and PP2 is 0.4 in drawing RBG-SZ-SL-PL-770-101-REV05. Should this read 0.4m to 0.45m deep. Point 17 - Tree Shown in a Parking Space. Should this be here? Point 18 - No gradient or depth given for this pipe. (This note also applies to a number of pipes across the site).	

Drawing Reference	Rev	Drawing Title	Comment	Drawing Status
			In this case if the ground level at upstream end of pipe is 52.00m AOD (from planning drawing) and Invert level at SWMH-09 is 51.50m AOD (from schedule) then this does not work. Point 19 - Note confirms that the design is not yet complete. Point 20 - Unknown chamber type. These chambers are not identified in the drawing schedule and are not in the Details Drawings. Need to be added to key and a detail provided. Point 21 - On Drg RBG-SZ-SL-PL-770-101-REV05 the Attenuation Tank (AT1) is identified as holding 1260m3 of runoff from hardstanding areas. It is not clear from the drawings how this gets into AT1. The only connection to AT1 is from SWMH-07 and this would appear to be from the roof drainage. The area surrounding AT1 is also described as 'Soft Landscaping' on Drg RBG-SZ-SL-PL-770-102-REV01 and therefore may not need storage. Stored flow from AT1 does not appear to be subject to SUDs treatment. Point 22 - ACO Channel could not connect into this pipe at this depth using the connection detail shown on RBG-SZ-00-DT-770-002-REV03. Point 23 - No gradient/depth or diameter for this long pipe run to manhole only 0.58m deep. Nearest ground level show on planning drawing is 52.00m AOD and invert level at SWMH-02 is 51.20m AOD. From detail drawing RBG-SZ-00-DT-770-002-REV03 gully connections are 150mm diameter if at 1:150 gradient and 40m (approx) this doesn't work. Point 24 - No SUDs treatment for	

Drawing Reference	Rev	Drawing Title	Comment	Drawing Status
			this area. Point 25 - Secondary Surface water pipe connect to the the surface water system. Does this need deleting? Point 26 - There are clashes in this area between the Surface Water pipes and the Secondary Surface Water pipes and ACO channels. Point 27 - Depth from ground level to underside of cellular storage crate is 0.53m (0.4m media and 0.13m road make up). The depth below ground of the Surface Water pipe is 0.58m (from Schedule). Therefore the top of the surface water pipe clashes with the underside of the crate storage. Point 28 - Some Type D manholes have multiple pipes coming into them (SWMH 02) while only 675x675 manhole. Point 29 - Schedule Incomplete: There are no co-ordinates shown for any of the manholes. Point 30 - There is very shallow cover to a number of these pipe runs. Some of which are approximately 355mm just before crossing under buildings. Point 31 - Yard gullies (G) in the permeable pavement. Flow to gullies will bypass the SUDs treatment from the permeable paving. Point 32 - Petrol/Oil interceptor for service yard missing in schedule. (Petrol/Oil interceptor for Heli-pad has been included in foul schedule). Point 33 - The Secondary Storage system clashes with the underside of the crate storage at manhole SWMH03. Point 34 - Existing manholes (MHs) ST09 & SW03 type are listed 'AS EXISTING'. Can new connections be fitted in with the existing connections or are new Manholes required? If these chambers are to house hydrobrakes	

Drawing Reference	Rev	Drawing Title	Comment	Drawing Status
			they will need to be replaced accordingly with a suitable MH design. Point 35 - Is this a Hydrobrake Chamber? Point 36 - This area has been clouded but there is no explanation why it has on the drawing. Point 37 - Drainage runs under the corner of the building. Point 38 - Is this a Hydrobrake Chamber? Point 39 - No gradient or depth or diameter given for this pipe that runs under the building. This is need to check the cover to the pipe is sufficient. Point 40 - Is this Ground Level correct? It is substantially higher than the surrounding ground levels. Point 41 - This chamber is a hydrobrake MH. As shown in Detail RBG-SZ-00-DT-770-004 - Attenuation Tank Point 42 - No invert levels shown for Petrol/oil interceptor. (See note on Schedule) Point 43 - Is this a Hydrobrake Chamber? Point 44 - Only two two gullies for all service area. From the detail drawings RBG-SZ-00-DT-770-002-REV03 these are also only Yard Gullies (G) and not Road Gullies (GR). Dependant on kerbing details and ground profile these gullies easily be bypassed by surface water flows from this area. It is not clear from the drawing how this areas subject to SUDs treatment.	
RBG-SZ-00-PL-770-101		Surface Water Underground Drainage Plan Sheet 2	Not received	
RBG-SZ-00-PL-770-102		Surface Water Underground Drainage Plan Sheet 3	Not received	
RBG-SZ-00-PL-770-200	04	Foul Water ground Floor Drainage Plan Sheet 1	Point 1 - No Eastings/Northings	C

Drawing Reference	Rev	Drawing Title	Comment	Drawing Status
			provided. Point 2 - CSMH-02 - CSMH-05 - Invert levels on this drawing differ from invert levels on drawing RBG-SZ-00-PL-770-202. Please clarify. Point 3 - Conflict between benching note here and details on drawing RGB-SZ-00-DT-770-001. Please clarify. Point 4 - CHMH-05 - 150mm diameter pipe from proposed development discharges into the diverted 375mm diameter County Sewer. Pipes of different diameters entering manholes should be installed with soffits at the same , as per Sewers For Scotland. Point 5 - CHMH-03 - 150mm diameter pipe from proposed development discharges into the diverted 375mm diameter County Sewer. Pipes of different diameters entering manholes should be installed with soffits at the same , as per Sewers For Scotland. Also the angle of incoming 150mm pipe to the Country Sewer is less than 90 degrees. Point 6 - PI-HELI and FWMH-HP located within surface water storage area. Point 7 - Substantiation required as to why main foul pipes in these areas are 100mm diameter, whereas 150mm diameter pipes are used elsewhere. Point 8 - General note - Manholes at beginning of pipe runs generally have minimal cover. Will there be sufficient fall from invert where pop-ups begin (with 100mm clearance from underside of slab to top of pipe, as per details drawing) to manhole/branch into main line. Examples (but not limited to) at MH03, MH22, MH28, MH29 and long length of pipe running into PI-HELI. Point 9 - Heli-pad drainage does not	

Drawing Reference	Rev	Drawing Title	Comment	Drawing Status
			appear to comply with latest guidelines, specifically Health Building Note 15-3 : Hospital Helipads, in particular Chapter 5, clause 5.8. Plastic pipes should not be used in case of burning fuel entering the pipe system. In the event of fire, valves to be provided to divert water, fuel and foam into an oil/water separator (separator shown on drawing). Point 10 - FWMH-39 - 1200mm diameter manhole rings stipulated. Has this been sized appropriately to accommodate 2 No. 225mm diameter and a 150mm diameter incoming pipes, and a 225mm diameter outgoing pipe? Point 11 - Conflict between pipe diameters on details drawing RBG-SZ-00-DT-770-003 (200mm vs 225mm diameter). Clarification required. Point 12 - FWMH-HP - Manhole schedule states 510mm from ground level to pipe invert level. However petrol interceptor detail on drawing RBG-SZ-00- DT-770-003 shows at least 1025mm to incoming/outgoing pipe soffit.	
RBG-SZ-00-PL-770-201	04	Foul Water ground Floor Drainage Plan Sheet 2	Point 1 - CSMH-02 - CSMH-05 - Invert levels on this drawing differ from invert levels on drawing RBG-SZ-00-PL-770-202. Please clarify. Point 2 - Rising main from basement - where does it discharge to? Is there a break pressure chamber to dissipate the flow? Point 3 - Foul rising main pumped directly into manhole within building. Is a break pressure chamber required? Have all other avenues been explored? Point 4 - Conflict between benching note here and details on drawing RGB-SZ-00-DT-770-001. Please clarify. Point 5 - Should be Figure 16	C

Drawing Reference	Rev	Drawing Title	Comment	Drawing Status
			Point 6 - Is all foul drainage shown for this building? Point 7 - General note - Manholes at beginning of pipe runs generally have minimal cover. Will there be sufficient fall from invert level where pop-ups begin (with 100mm clearance from underside of slab to top of pipe, as per details drawing) to manhole/branch into main line. Examples (but not limited to) at MH40	
RBG-SZ-00-PL-770-202	04	Foul Water ground Floor Drainage Plan Sheet 3	Point 1 - CSMH-02 - CSMH-05 - Invert levels on this drawing differ from invert levels on drawing RBG-SZ-00-PL-770-202. Please clarify. Point 2 - Conflict between benching note here and details on drawing RGB-SZ-00-DT-770-001. Please clarify. Point 3 - Should be Figure 16 Point 4 - General note - Manholes at beginning of pipe runs generally have minimal cover. Will there be sufficient fall from invert level where pop-ups begin (with 100mm clearance from underside of slab to top of pipe, as per details drawing) to manhole/branch into main line. Examples (but not limited to) at MH01.	C
RBG-SZ-B1-PL-770-200		Basement Foul Water Drainage Plan Sheet 1	Point 1 - Conflict between benching note here and details on drawing RGB-SZ-00-DT-770-001 Point 2 - General note - Cover to top of pipe at manholes is minimal, especially with a 450mm thick floor slab. Will there be sufficient fall from invert level where pop-ups begin (with 100mm clearance from underside of slab to top of pipe, as per details drawing) to manhole/branch into main line. Point 3 - General note - No manhole type references. Point 4 - Where does rising main discharge? Not clear on Ground Floor Plan.	C

Drawing Reference	Rev	Drawing Title	Comment	Drawing Status
			Point 5 - General note - No details have been supplied for basement slab surface water drainage and high water table, in particular ground water management to mitigate hydrostatic pressure.	

Part 3: Reviewable Design Data:

Project Co shall submit and the Board shall review the following Reviewable Design Data not provided to the Board nor approved by the Board at Financial Close.

This Part 3 of Section 5 *(Reviewable Design Data)* of Schedule Part 6 *(Construction Matters)* sets out the details of the specific design information, materials, samples and required approvals (as more specifically set out in the table below) ("**Reviewable Design Data**") to be reviewed by the Board in accordance with Schedule Part 8 *(Review Procedure)* before such Reviewable Design Data is incorporated into the Facilities and/or the Site by Project Co.

If Project Co subsequently revises or amends its Project Co's Proposals in relation to the Room Data Sheets and/or Reviewable Design Data, then such revisals or amendments shall require to be issued to the Board for review under Schedule Part 8 *(Review Procedure).*

Any items referenced in the Section 3 (Board's Construction Requirements) and Section 4 (Project Co's Proposals) of Schedule Part 6 (Construction Matters) relating to Schedule Part 8 (Review Procedure), to comments such as "*shall be reviewed as Reviewable Design Data*" or "*to be agreed with the Board*", shall be deemed as Reviewable Design Data to be submitted through Schedule Part 8 (Review Procedure).

Following the date of this Agreement:

- Project Co shall submit a programme of issue dates for Reviewable Design Data set out in this Part 3;
- Project Co shall ensure that such programme shall show the items of Reviewable Design Data forecast to be submitted to the Board within the next 3 months;
- Project Co shall revise and reissue the programme on a monthly basis so as to maintain a rolling 3 month look ahead from each date of issue

Project Co recognises this aspect of the Reviewable Design Data process is still to be agreed and further acknowledges the practicalities for the Board co-ordinating and undertaking the reviews of Reviewable Design Data. Project Co shall ensure that no changes to the first month of each revised 3 month programme shall be made without the prior approval of the Board, and the Board shall approve or reject any Project Co proposal for such a change within 5 Business Days of receipt of the Project Co proposal, failing which the Board shall be deemed to have approved the change.

Project Co shall take reasonable endeavours to sequence the release of information in a manner so as to mitigate the volume of parallel reviews required to be undertaken by the Board pursuant to the Review Procedure.

Ref	Sample	Drawing	Other	Description	Project Co to submit by:	Board to review by:
A				**GENERAL INFORMATION**		
A1			*	Room Data Sheets (including upper load limits for heavy equipment).		
A2		*		Entrance areas		
A3		*		1:100 detailed landscape plans for all areas including courtyards showing levels, surface finishes, planting details, kerbs, paths and lighting for works both within red		

Ref	Sample	Drawing	Other	Description	Project Co to submit by:	Board to review by:
				line boundary and out with including any visual screening, security details and maintenance access. To include extent, type and location of all external equipment.		
A4		*		1:100 general arrangement floor plans, and sections		
A5	*	*		1:50 details of building envelope in conjunction with 1:50 sections through all external systems/ components particularly at interfaces, changes in plane and junctions. (Note – full size mock ups of key envelope areas to be provided on site.) Also same info for basement and sub structure.		
A6		*		1:50 Loaded room & corridor layouts to include all building services outlets and equipment, showing reflected ceiling plans, internal wall elevations and floor plans.		
A7	*	*	*	1:100 Interior Design & Wayfinding layouts supported by 3D coloured visualisations and materials sample boards sufficient to illustrate in detail the interior design and wayfinding proposals for all areas of the Facillities, including details of where artwork is to be incorporated.		
A8		*		1:200 fire strategy plans – showing all fire compartments, sub compartments, Fire brigade access routes, hazard rooms, fire doors, fire escape doors and routes, call points, detectors, fire extinguishers, emergency lighting, fire dampers, fire hydrant locations, dry riser inlet and outlet points, smoke extract locations and compliance with Firecode.		
A9		*		1:100 elevations and details of window glazing and opening lights types and locations		
A10	*	*		1:50 glazing details, 1:50 sections and full size mock ups of glazing systems to be provide on site.		

Ref	Sample	Drawing	Other	Description	Project Co to submit by:	Board to review by:
A11		*	*	1:100 roof plan with details of rooflights and other roof terminations. Comprehensive specification and details of all proposed roofing systems to be provided.		
A12		*		1:100 sections and1:50 sections		
A13		*		Loading floor plans and elevations including details of strong routes. Upper load limits for heavy equipment as per Room Data Sheets. Maximum allowable structural deflections, differential settlement, vibration and specific tolerances of areas. (structural)		
A14			*	Detailed specifications for all mechanical and electrical components		
A15			*	List of proposed manufacturers, products, materials and equipment proposed.		
A16		*		Entrance canopy and covered walkway plans and details		
A17		*		Main entrance details		
A18	*			Facing bricks		
A19	*			Facing blocks		
A2-0	*			Cladding - all types		
A21	*		*	Window types		
A22	*		*	Roofing materials		
A23	*		*	Internal wall, column and ceiling linings including details of screening to rooms containing radiology or emitting ionising radiations, field protection around MRI installations and screening to rooms containing EEG or evoked potential recordings equipment.		
A24	*	*	*	Bespoke joinery		
A25			*	External doors		
A26	*		*	Door signage - NHS standard		
A27		*	*	Balustrade		
A28			*	Plaster/render		
A29	*			General floor finishes		
A30	*		*	Painting and decorating		
A31	*		*	Sanitary fittings including schedule		
A32			*	Drainage materials		
A33	*			All light fittings		
A34	*			In patient radiator/valve		

Ref	Sample	Drawing	Other	Description	Project Co to submit by:	Board to review by:
A35	*		*	Typical bed head assembly with patient call, etc.		
A36	*			Typical switches/sockets		
A37	*		*	Typical smoke detector etc		
A38	*		*	Vent, grill & diffuser		
A39		*		Location of all structural movement joints.		
A40		*		Road, car park and footpath design, materials and layout including fire fighting appliance access, Details of pedestrian crossings, road and car park markings.		
A41	*	*	*	Works of art being included in the project including details of associated artists and samples of work.		
A42		*	*	Drawings and report indicating the adaptability strategy incorporated in the proposals.		
A43		*	*	Drawings and report on the demolition methodology being proposed.		
A44		*	*	Full details of helipad and associated procedures.		
A45		*	*	Details for the control of infection		
B				**SPECIFIC PROPOSALS**		
B1	*	*	*	Nurse call/communication system including Panic Alarm		
B2	*	*	*	Security installations (inc sample of CCTV cameras)		
C				**ELEMENTAL INFORMATION**		
C1	*	*	*	Internal doors and screens		
C2	*	*	*	Ironmongery schedule, samples and lock suiting including details of card access system		
C3	*		*	Finishes schedule		
C4	*		*	Schedule and details of furniture and fittings		
D				**FLOOR FINISHES**		
D1	*			Sheet finishes & skirtings		
D2	*			Carpets		
D3	*			Ceramic tiling		
D4	*			Dirt arresting floor coverings/ mats		
D5	*			Resin flooring & skirtings		

Ref	Sample	Drawing	Other	Description	Project Co to submit by:	Board to review by:
E				**CEILING FINISHES**		
E1	*			Suspended – grid and tile types		
E2			*	Plasterboard		
E3	*			All other ceiling types		
		*		Access Hatches		
F				**WALL FINISHES**		
F1	*			Decorations		
F2	*			Ceramic tiling		
F3	*			Vinyl Sheet		
F4	*	*		Wall/corner protection		
G				**FIXTURES & FITTING**		
G1	*		*	Taps – all types		
G2	*	*	*	Touchdown bases		
G3	*	*	*	Reception counters		
G4	*		*	Office workstations		
G5	*		*	External/Internal signage		
G6	*		*	Light switches and sockets		
G7	*			Luminaires		
G8	*		*	Work benches/work surfaces		
G9	*	*	*	Bed head arrangement and patient call		
G10	*		*	Cubicle curtain track		
G11	*		*	Blinds		
G12	*	*	*	Equipment tagging		
G13	*	*		Anti ligature fixtures & fittings		
H				**ENGINEERING SERVICES**		
The following for mechanical and electrical engineering Reviewable Design Data shall be provided. This will encompass the design, size, location and interface with existing, phasing and temporary provision in schematic format with respect to the following;						
H1		*	*	Boiler/primary heating distribution		
H2		*	*	Hot and cold domestic water storage and distribution		
H3		*	*	hv and lv electrical distribution		
H4		*	*	Standby generators		
H5		*	*	Fire alarms and detection system		
H6		*	*	Nurse call system		
H7		*	*	CCTV/security system		
H8		*	*	Air handling systems		
H9		*	*	Lifts/transportation samples and visualisations of typical lift required.		
H10		*	*	Controls / BMS including details of graphic representations and associated tutorial software..		

Ref	Sample	Drawing	Other	Description	Project Co to submit by:	Board to review by:
H11		*	*	Voice & Data		
H12		*	*	Pneumatic tube system		
1:200 Primary distribution for all areas indicating main distribution routes and plant locations with respect to the following:						
I1		*		LPHW heating		
I2		*		Domestic water services		
I3		*		Ventilation		
I4		*		Lighting and power		
I5		*		Fire alarms		
I7		*		Voice & data		
I8		*		Nurse call		
I9	*	*		Patient tagging		
I10		*		Pneumatic tube system		
1:50 Detail layouts for all areas for the following						
J1		*		Plant rooms and supporting schematics		
J2		*		Heating		
J3		*		Domestic water services		
J4		*		Ventilation		
J5		*		Lighting & power		
J6		*		Fire alarms		
J7		*		Voice and data		
J8		*		Nurse call		
J9		*		Security/CCTV		
J10		*		Personal alarms		
J11		*		Sprinklers		
J12		*		Lightning protection		
J13		*		Pneumatic tube system		
J14		*		Infrared systems and induction loops		
J15		*		Proposed voids above ceilings and safe points of access.		
J16		*		Door access system		
1:500 external services drawing indicating all new works and site modifications, routes of all new and diverted services relating to the following:						
K1		*		Natural gas		
K2		*		Electrical supplies		
K3		*		Water supplies		
K4		*		Street lighting car park lighting		
K5		*		Foul and surface water drainage		
K6		*		Fire alarms		
Such supporting calculations, schedules and information, as requested by the Board to support items above.						

Ref	Sample	Drawing	Other	Description	Project Co to submit by:	Board to review by:
Elevational information related to fully loaded plans for complex areas						
L1		*		Voice & data communication		
M				**ENGINEERING SERVICES**		
The following for civil and structural engineering Reviewable Design Data shall be provided. This will encompass the design, size, location and interface with existing, phasing and temporary provision in document and drawing formats with respect to the following;						
M1			*	Piling Specification		
M2			*	Concrete Specification		
M3			*	Steelwork Specification		
M4			*	Civil Specification		
M5			*	Civil Specification – Scottish Water		
M6			*	Bulk Earthworks Specification		
1:200 Plan Drawings showing loading information						
N1		*		Basement Loading Plan		
N2		*		Ground Floor Loading Plan		
N3		*		First Floor Loading Plan		
N4		*		Second Floor Loading Plan		
N5		*		Third Floor Loading Plan		
N7		*		Fourth Floor Loading Plan		
N8		*		Fifth Floor Loading Plan		
1:200 Structural Drawings						
O1		*		Pile Layout GA		
O2		*		Basement GA Plan		
O3		*		Ground Floor GA Plan Sheet 1		
O4		*		Ground Floor GA Plan Sheet 2		
O5		*		First Floor GA Plan		
O6		*		Second Floor GA Plan		
O7		*		Third Floor GA Plan		
O8		*		Fourth Floor GA Plan		
O9		*		Fifth Floor GA Plan		
1:200 Civil Drawings						
P1		*		Foul Water ground Floor Drainage Plan Sheet 1		
P2		*		Foul Water ground Floor Drainage Plan Sheet 2		
P3		*		Foul Water ground Floor Drainage Plan Sheet 3		
P4		*		Basement Foul Water Drainage Plan Sheet 1		
P5		*		Scottish Water Sewer Diversion - Drainage Plan		
1:250 Civil Drawings						

Ref	Sample	Drawing	Other	Description	Project Co to submit by:	Board to review by:
Q1		*		Surface Water Underground Attenuation Systems	1:250	
1:500 Civil Drawings						
R1		*		Surface Water Underground Drainage Plan Sheet 1		
R2		*		Surface Water Underground Drainage Plan Sheet 2		
R3		*		Surface Water Underground Drainage Plan Sheet 3		
R4		*		Pavement Plan Sheet 1		
R5		*		Pavement Plan Sheet 2		
R6		*		Pavement Plan Sheet 3		
R7		*		Underground Surface Water SUDS Treatment Systems		
Civil Drawings with no scale						
S1		*		Early Works - Bus Layby Road Works Plan		
Civil Drawing Details with various scale (1:10, 1:20, 1:50)						
T1		*		Substructure Sections and Details Sheet 1		
T2		*		Substructure Sections and Details Sheet 2		
T3		*		Superstructure Sections and Details Sheet 1		
T4		*		Pavement Details Sheet 1		
T5		*		Early Works - Road Works Details		
T6		*		Basement Drainage Details Sheet 1		
T7		*		Drainage Details Sheet 1		
T8		*		Drainage Details Sheet 2		
T9		*		Drainage Details Sheet 3		
T10		*		Drainage Details Sheet 4		
T11		*		Scottish Water Sewer Diversion - Drainage Details		
Other Civil and Structural Engineering Comments						
U1			*	Design Note 18		
U2		*		Dewatering Sub Contractor Drawings		
U3			*	Project Co GIR		
U4		*	*	Vibration limitations on structural slabs		
U5		*		Structural Steel work and reinforced concrete Elevation and Section		

Ref	Sample	Drawing	Other	Description	Project Co to submit by:	Board to review by:
				drawings sufficient to identify (in conjunction with the slab drawings) the structural detail.		

Part 4: Non-Approved Project Co's Proposals Design Data comments:

Project Co shall submit and the Board shall review the following Board comments in respect of relevant Project Co's Proposals (which shall be deemed to be Reviewable Design Data) not approved at Financial Close given that such Reviewable Design Data only received a Level C or Level D at Financial Close, with such Project Co submission addressing the following Board comments in relation to such Reviewable Design Data.

These Board comments shall be incorporated into each relevant item of Design Data (which shall primarily relate to drawings accompanying the relevant Project Co's Proposals) by Project Co and the drawings shall be submitted by Project Co to the Board through Schedule Part 8 *(Review Procedure).*

If Project Co considers that the Board comments below on any of the items listed in this Part 4 amount to a Change, Project Co shall, before complying with the comments and resubmitting the Endorsed RDD, notify the Board of the same and, if it is agreed by the parties or determined pursuant to Schedule Part 20 (*Dispute Resolution Procedure*) that a Change would arise if the comments were complied with, the Board may, if it wishes, implement the Change and it shall be dealt with in accordance with Schedule Part 16 (*Change Protocol*).

Reference	**Title**	**Board Comments**
Project Co Proposal Section 4.3	Construction Methodology	Project Co shall provide Room Mock-ups in accordance with Paragraph 5.5 of the Board's Construction Requirements. The mock-ups are to be fully completed and ready for review and inspection within 6 months of Financial Close. The mock-ups will be constructed in locations to be agreed with the Board, failing which the mock-ups may be constructed as discrete units within the site boundary. If Project Co is unable to construct the mock-ups within the site boundary, they may be constructed, with the agreement of the Board, outwith the site boundary but no more than 5 miles from the RIE Campus. Project Co shall ensure that the proposed remediation measures at the Petrol Station will be sufficient for safe habitation and use of the site for temporary office accommodation. Project Co shall provide a schedule of deliveries and other construction traffic on a weekly basis to the Board so that conflicts with other campus movements are avoided.

Project Co Proposal Section 4.4	Architectural and Landscaping	Anti Ligature: HLM-SZ-00-PL-330-100 03 ANTI-LIGATURE PROPOSALS, in addition to the areas in CAMHS and the Mental Health Exam Room in A1, Project Co shall ensure the following rooms have anti-ligature fittings. G-A2-044, 1-L1-015, 2-L2-010, 2-L2-142 and 3-C1.1-058. Project Co shall ensure the following rooms have plasterboard ceilings – G-F1-022, G-F1-023, G-F1-026, G-F1-027, G-F1-47 and G-F1-048. Proximity Parking: HLM-Z0-00-PL-700-021 03 Landscape GA - Hospital Square. DCN proximity parking layout subject to confirmation in relation to adjacent current and known future RIE MRI scanners. Text adjacent to alternative ED Entrance incorrectly located. Drawing subject to further development with Users and submission as part of RDD. The above comment supersedes the comment on Part 1 of Section 5 RDD of Schedule Part 6 - Construction Matters.
Project Co Proposal Section 4.5	Interior Design and Wayfinding	Project Co shall acknowledge that the integration of the Group 3 furniture and equipment into the interior design is fundamental to the quality of the final interior ambiance of the Facilities and therefore, Project Co shall assist the Board with the selection and co-ordination of that Group 3 furniture and equipment. Project Co shall acknowledge that the facility for patients to personalise their rooms is an important part of the therapeutic process and expects that within the interior design proposals, Project Co shall integrate a dedicated and suitably finished space for children to display their own artwork within their rooms.
Project Co Proposal Section 4.8	Civil and Structural Engineering	Geotechnical and Geoenvironmental Reports : Project Co shall not rely on the Arup/BAM report as referenced in the CGL letters. In accordance with the BCR's, Project Co shall submit to the Board an IHSL GDR and GIR report. Project Co to consider that Ground water at levels above 50m OD were recorded during ground water monitoring as recorded in the factual ground investigation reports. Project Co shall submit the pile testing proposals and the piling contractor testing requirements.

		Pending the issue of the GDR and GIR, the Board reserves the right to comment on the item's raised within these reports including but not limited to ground Gas Protection and Waterproofing measures and the use of contiguous pile wall. Project Co to confirm the basement waterproofing details comply with the BCRs. The Board notes a conflict between the drawings and PCPs with regards to the gas protection. Further discussion required on the provision of gas protection through the RDD process.
Project Co Proposal Section 4.9	Mechanical and Electrical Engineering	Retail Units: Project Co shall provide the retail units with the base build system L1 fire detection. Lothian and Borders police to be replaced with Police Scotland.
Project Co Proposal Section 4.9	Sustainability & Energy Model	Final design model to be submitted through Review Procedure following the finalisation of the Plant selection and system arrangement.
Project Co Proposal Section 4.11	BREEAM	• Man 1 - Section 7 (Thermal and Energy Efficiency and Testing Procedure) of Schedule Part 6 (Construction Matters) requires a thermographic survey and seasonal commissioning to be undertaken. Project Co shall undertake a thermographic survey and seasonal commissioning and monitoring. • Man 4 - Post Occupation Evaluation (POE) is under investigation, further discussion is required relating to the nature of this investigation. • Ene 2 Proejct Co shall review the strikethrough of item 2, as there is a requirement in the BCR's to sub meter departments e.g. catering and building function areas, retail units. Further discussion required on why Item 2 is not currently targeted. • Ene 4 Item 2.12 of section 4.9 M&E PCP states Project Co shall provide "free cooling".

		Further discussion is required on where free cooling is utilised, even if Project Co cannot meet the full BREEAM coverage • Ene 5 - This BREEAM scope is for "commercial/industrial sized refrigeration and storage systems", Project Co responsibility. Further discussions required on whether the new storage can meet the BREEAM standard. • LE5 Further discussion required on why item 5 is not achievable.
Project Co Proposal Section 4.12	Fire Strategy	Project Co shall submit to the Board the items identified in the derogations as requiring further development. Project Co shall also submit through the RDD process, including but not limited to; • Means of escape, • Means of Warning, • Fire Spread and Control, and • fire brigade access.
Project Co Proposal Section 4.13	Acoustic Strategy	2.1.2 Internal Doors ACC005/9 Project Co to delete comment box Project Co to clarify derogation reference. 2.9 (and 4.6.1) ACC0021: Project Co to confirm that absorption will be provided to achieve STI 0.6-0.75 in waiting reception areas with speaking distances greater than 1m. ACC0002/14: Project Co to confirm that with the windows closed the ventilation requirements and acoustic performance shall be achieved. EFTE roof-airborne noise break in: Project Co shall control plant noise at source to avoid excessive break-in through ETFE roof. Energy Centre Façade: Project Co shall confirm that the 50dBA limit will be achieved.

4.14	ICT Strategy	Project Co shall confirm the extent of the blown fibre solution. Information Technology (IT) Equipment and Distribution Systems Point 7 – Project Co shall use the title 'node' rooms.
4.15	Vertical Transportation	Section 3.0 - 4th para - Project Co shall provide FM lifts to serve all floors including Basement. Project Co to review drafting of text in conjunction with tables: -Section 4.0 - L4 and L5 Lift types should be 'type 2' lifts with a paragraph ref of 5.4.2. Still down as Type 1. -Section 5.0 - section 5.4.2 - text to read - (Lifts L6, L7, L12, L13 & L14). Number of stops should read 6. States 5. - Section 5.0 - section 5.4.3 - text to read (Lifts L4, L5 & L11). Only refers to L11. - Section 5.0 - section 5.4.4 - delete text ref to L4 & L5. Not deleted Section 6.0 - penultimate para - '2 x 1000kgs' - this statement is not in accordance with the lift capacities detailed in table in section 4.0 Main Characteristics summary , Project Co to review calculations. Project Co shall procure that the two service yard FM lifts are supplied from separate electrical circuits to maintain services. Project Co has stated 223 in-patient beds, this should state 233.
Project Co Proposal Section 4.16	Commissioning	Section 12 – Retained Estate Hand back Infrastructure The following statement within the PCP is incorrect in the context of this section “Project Co shall comply with the requirements contained in Schedule Part 18 Handback Procedure”. Project Co shall provide details on the commissioning and handover of the Retained Estate Hand back Infrastructure.

		Project Co shall discuss with the Board the interaction of the Independent Tester with reference to the Completion Criteria. Project Co shall incorporate the following comments in the Outline Commissioning Programme, located within Appendix C of Schedule Part 10: • Line 6 – should read 6 months prior to PC • Line 7 – Project Co shall give notice to IT and Board • Line 29 – 10 days after • Line 30 – include drawings and 10 days post PC • Line 33 – Project Co shall rectify snagging – timescale incorrect – 10 days not 4 weeks • Line 44 – orientation of staff will take longer than 2 weeks • Line 48-51- not sure what this refers to – we plan to move the services in phases not yet agreed. • Line 40- needs to happen earlier – some in pre-completion phase and rest immediately after PC • Line 38 – very specific and doesn't cover all- make more general • Line 47 - will be happening from handover to first patient starts • Line 18 – agreed we would get earlier notice as delivery of group 2a needs to be in line with closure of areas of the building. • Line 22 - Date for NHS Early access – 3 months before PC and 6 months before first patient. • Line 23 will happen as late in the period prior to first patient but may spill back into early access time. • Very light on FM Services commissioning • Missing information from Outline Commissioning Programme as follows: • Lines for close down of different parts of building – this is important for procurement and installation of group 2B and IT - Dates for access to Board for installation of

		IT in sufficient time to procure and install in agreed phases to match close down of different sections of building • Line to cover project Co commissioning and staff training on Board Specified Group 1 equipment • Start of Help desk needs identified and needs to be running on completion • Line to cover 20-30 days notice to IT and Board re works complete and completion test date • Line to cover date for Project Co to give notice to Board of date Board entitled to commence pre-completion commissioning- may be the same as early access • Line for IT to issue certificate of practical completion.
Project Co Proposal Section 4.17	Access Control Strategy	Further discussion with the Board required to confirm access barrier control locations.
Project Co Proposal Section 4.18	Security Strategy	1.3 Staff Safety Project Co shall provide portable staff attack alarms in line with the BCR's, this requirement shall be discussed further through the Review Procedure. Project Co shall provide the facility to lock departments and public toilets when closed or not in use. Project Co shall provide details as to how reception desks are secured when not attended.
Project Co Proposal Section 4.21	Equipment Strategy	The Board notes that the Equipment Schedule Version 7 used at Financial Close and included within Schedule Part 11 Equipment does not reflect the corrections and updates previously shared with Project Co on drawings or via Aconex and further development is required. Specific equipment responsibilities in areas with specialist fit out will require to be developed further as part of RDD to ensure clarity of roles and responsibilities between Project Co and the Board.
Project Co Proposal Section 4.23	Specifications	MECHANICAL & ELECTRICAL SPECIFICATION • Specifications are generic NBS specifications and do not identify if each specification is to be used on this project or for which service it is intended to provide e.g. DHW services pipework should include specification for stainless steel pipework and all associated specifications, pumps, valves, insulation etc.

		• These specifications should be reviewed and only relevant specifications submitted, detailing intended service provision. Example: - Specification 320 - Bulk wholesome quality sectional water storage tanks and break tanks will be located within the basement of the hospital building. - Section 4.9 Mechanical & Electrical Engineering Main raw water, filtered clean water and category 5 storage tanks are located within the fourth floor water tank plant room. • There are 752 pages in the M&E specifications which are generic and include the anomalies as above. • All items that are stated as "Submit proposals" shall be submitted by Project Co through the Review Procedure. • Where options are included these need to be refined to actual proposals.
		CIVIL & STRUCTURAL SPECIFICATION Project Co shall take account the following comments in ongoing discussions with the Board: 1. Preliminaries and General Conditions have not been provided for review in conjunction with the Piling Specification. 2. "Piling Works Document" and "Performance Specification for Construction Noise and Vibration" have not been provided for review. 3. Geotechnical Interpretative reports by BAM Construction Ltd. are referenced in the specification. Project Co does not have reliance on these documents and any reference should be removed. 4. Drawing reference (RBG-MZ-B1-PL-210-001) noted in sections 280A and 281 does not match the reference of the Pile Layout Drawing (with noted pile loads) provided for review (RBG-SZ-SL-PL-210-101 rev 02). Drawing RBG-MZ-B1-PL-210-001 was not provided. 5. It is stated that the piling guarantee is to be 12 years, which is less the design life of the proposed buildings, Project Co to comply with the BCR's. 6. Reference is made to Contract Documents, but these have not been provided for review

		7. Table B1.2, as referenced in clause 210A does not contain relevant information for review of piling works proposals. The following information is not contained in the Piling Specification. a. Pile Cut Off levels have not been provided b. Proposed pile commencing surface (indicating lengths of pile head trimming) has not been provided RBG-SZ-XX-SP-260-001 Rev 03 Concrete Specification Specification to be resubmitted on the basis that comments have been made on the structural drawings. RBG-SZ-XX-SP-260-002 Rev 01 Steelwork Specification Comments related to structural aspects Specification to be resubmitted on the basis that no steelwork drawings have been made available for review. RBG-SZ-XX-SP-700-001 Rev 03 Civil Specification Comments on geotechnical aspects of the Civil Specification: Q20 – Granular Sub-base to roads/pavings 1. Clause 120 – 'Checking of Subgrade' refers to Arup GIR for soil conditions, plasticity parameters, design CBRs, Groundwater conditions – Project Co does not have reliance on these documents. 2. Clause 140 – Soft spots & voids – no details of action have been provided, i.e. removal and replacement with suitable compacted granular fill 3. Clause 210 – Recycled aggregate is permitted – There is no details provided of any other proposed materials source (i.e. quarry or brownfield site source). 4. No section confirming materials testing of Type 1 was provided – as per Series 800, cl. 801. Also there are no details of testing frequency. 6. Performance testing requirements of sub-base (and sub-grade) have not been provided. Also there are no details of testing frequency i.e. CBR test spacing of sub-grades

		CIVILS COMMENTS - ALL SECTION R12 Clause 110 – No mention of brick manholes. Clause 135 – All package pump items noted as TBC. Clause 667 – Bedding – does not comply with the BCR's. Clause 667 – Surround – does not comply with the BCR's Clause 753 – Step rungs have not been designed in accordance with the BCR's or Sewers For Scotland standard detail drawing. Clause 757 – Benching does not comply with the BCR's RBG-SZ-XX-SP-700-002 Rev 02 Bulk Earthworks Specification / Status C 1. General Comment - The scope of proposed earthworks is unclear and difficult to understand based on the information made available. 2. General Comment - No earthworks drawings have been provided to support the proposed bulk earthworks specification and scope of works (ie. cut/fill balance, topsoil storage/landscape mounds, final contour plans) 3. Section 2.1.1 of the Specification provides a list of documentation to be read in conjunction with the specification of which various sources: a. have not been made available for review (i.e. site topographic survey), b. IHSL do not have reliance on these documents (i.e. BAM/ARUP Geotechnical Interpretative Report) – these documents appear to form the basis of the anticipated ground conditions onsite and subsequent earthworks design. c. All reference to BAM / Arup should be removed. Have been superseded (i.e. CARD Geotechnics Geotechnical Interpretative Report) 4. The Scope of Earthworks appears inconsistent as Section 1.2 Scope of Works only references 6N (Structural Fill) fill operations whilst general filling (including starter layers), capping, type 1 filling (sub-base?) and landscaping operations are detailed in sections 2.4.16 to 2.4.20. Further clarification of the full scope of earthworks is required. 5. Section 2.3 Disposal of Materials suggests any site-won material not suitable for 6N/6P 'Hard Fill' shall be disposed offsite. This statement does not appear to align with other filling operations mentioned later in the document (see above point) and requires further clarification.

		6. Anticipated cut and fill quantities within the development have not been provided and it is therefore difficult to determine magnitude of potential offsite disposal. 7. No material classification has been provided for suitable/permissible general and landscape fill materials. Given the presence of geologically variable and potentially unsuitable materials at the site; clarification of acceptable/unacceptable soil for re-use as fill shall be submitted for the Boards review. The Board would expect this the correspond with the contents of Appendix A. 8. Compaction requirements (ie. 95% Maximum dry Density) have not been provided for the Type 1 and Capping 6F1/6F2 materials. 9. It is unclear what is meant by '150KPA TBC'. No information has been provided to determine the basis of this value. 10. As stated above, we are not aware that shallow foundations will be adopted on site and requires clarification. 11. No information has been provided to comment on location and adequacy of 'H' testing locations. 12. It is unclear what is meant by 'zone' testing 13. It is unclear whether formation level refers to cut/excavated level or finished earthworks/foundation level. 14. No details have been provided to confirm performance testing (including density testing) of engineered earthworks layers and final/finished earthworks level. 15. Appendix A is unclear and requires following clarifications: a. Table includes reference to geotextiles however it is unclear within the document where this forms part of the works. b. Frequency of testing does not distinguish between imported and site won fill materials. c. Many testing requirements are referenced back to clause 2.4.25 for bearing capacity testing below shallow foundation areas suggesting these may only be applicable within these zones which remain unclear. Project Co to undertake materials and performance testing to apply throughout the earthworks operations d. Specification for Highway Works Table 6/1 & 6/2 extracts do not include for all materials contained within the Testing

		Requirements Table
Project Co Proposal Section 4.28	Health and Safety	Project Co shall reinstate the commitment that haul roads shall be surfaced in asphalt to minimise the effects of dust generation from traffic. The responsibilities of Project Co's Construction Director shall be stated in line with those given for other appointments. References to the University of Edinburgh Research Centre should simply be University of Edinburgh.
Environmental Matrix		Project Co shall update the Environmental Matrix to reflect the following Board comments • The Environmental Matrix shall by updated by Project Co to reflect all the rooms and room types in the proposed Facility, this should be based on an updated Schedule of Accommodation that has been commented on separately by the Board. This also needs to reflect the names and room numbers in the GSU table. • Include the requirements contained in the Clinical Output Specification including but not limited to the requirement that theatre temperatures are to be able to be raised to 31°C for certain operations • Measures shall be assessed, modelled and implemented to demonstrate that the internal air temperature of the following room types to reduce the temperature control from 28°C to 25°C; o Treatment Rooms; o Consulting Rooms; o Laboratory; o Physiotherapy Studio; o Recovery. These room shall not exceed the maximum acceptable level of 25°C for more than 50 hours per annum • Detailed proposal awaited on bedroom ventilation to achieve balanced/negative pressure relative to corridor. • Colour rendering all stated as 80 where certain areas should be 90. • There also need to have a consistent approach e.g. guidance notes and ED body view room stated as 28 -8, bereavement suite body view room stated as 25 -8. • Further discussion is required on the minimum

		temperate requirement for the Body View Room.
Schedule of Accommodation		Project Co shall update the Schedule of Accommodation to reflect all of the individual elements of the proposed Facilities in accordance with Good Industry Practice.

Royal Hospital for Sick Children and Department for Clinical Neurosciences - Edinburgh

RHSC / DCN RDS Environmental Matrix

Dept Code	Index
~	Cover
~	Guidance Notes
~	Room Function Reference Sheet
A1 - A4	Front Door - A&E / Assessment Ward
B1	Critical Care / HDU / Neonatal Surgery
C1- C5	RHSC In Patient Pathway / Ward Care
D1 - D10	RHSC Ambulatory Care
E1	Pod
F1	Child and Adolescent Mental Health
G2 - G3	Clinical Support
H1 - H3	Academic
I1 - I2	Facilities / Infrastructure Support Services
J1 - J2	Patient / Family Support
K1 - K2	Family Facilities
L1 - L2	DCN In Patient Pathway / Ward Care
M1- M4	DCN Support Space
N1	DCN Out Patient Departments
P1	Combined Theatres
Q1	Combined Radiology
R1 - R2	Office / Admin Support Services
S1 - S7	Combined Facilities / Infrastructure Support Services
T1	Plant
U1	Shelled Space

Rev	By	Description	Date

Environmental Matrix - Guidance Notes

1 This workbook is prepared for the Financial Close Stage as an easier reference tool to replace ADB RDS M&E Sheets for the Environmental Criteria elements as described on these sheets.

2 The services matrices are produced from the Schedule of Accommodation Sheets.

3 The design of the HVAC systems to the theatres shall be in accordance with SHTM 03-01.

4 Where radiant panels are indicated in any room in these matrices, detailed design development may remove the need for these without detriment to environmental temperature. This design development is dependant on actual room layout - i.e. whether a room is located adjacent to an external wall, ground bearing floor, roof surface or is internal.

5 Ventilation air change rates and the use of natural ventilation in Patient Areas shall be reviewed throughout the detail design process to ensure a maximum internal temperature of 25°C (dry bulb) is not exceeded during normal occupancy. This criteria shall also apply to cellular and open plan office spaces.

6 Maximum internal temperatures listed relate to normal occupancy and Summer Design Conditions ; External Summer Conditions for Cooling Plant Selection as per SHTM2025,Enthalpy 54kJ/kgda.26deg°Cdb,19deg°C wb. External Winter Conditions as per CIBSE Guide A Table A 2.2 for locality = - 6°C for Heat Losses, and as SHTM 2025 for locality = -10°C for AHU Ventilation Plant design.

7 Examination lamp notes where listed are provisional. Detailed requirements (fixed, mobile, illumination) will be detailed on C sheets as agreed from signed off 1:50 RDS, which shall take precedence over this schedule.

8 All lighting levels are derived from CIBSE Lighting Guide LG2.

9 Colour rendering refers to CIBSE Lighting Design Guide and will be applied throughout.

"80" : Normal
"90" - Enhanced to provide close as possible match to natural light for clinical purposes

10 Thermostatic Mixing Devices - SHTM 04-01 Guidance shall be employed for specific TRV Type versus listed Area/Activity.

11 Standby Lighting to be Grade A throughout .

12 The internal temperature in naturally or mechanically ventilated rooms shall not exceed the maximum temperature as listed on these Environmental Matrices provided external summer design criteria is not exceeded .

13 Local Radiant Panel PICV's shall have adjustable sensors.

14 Local Control BMS Temperature Sensors for ducted reheat zones and chilled water cassettes for hotspots shall be provided with local range adjustment to +/- 2°C of BMS Set Point. BMS set point shall be adjustable via operator/user dialogue through formal FM

15 **Typical bedroom** - Design Criteria - SHTM 03-01 Clause 2.11 - internal temperatures in patient areas should not exceed 28°C db for more than 50 hrs per year. Appendix 1 SHTM 03-01 gives 18°C to 28°C float range. NHSL however require that the maximum internal design temperature should not exceed 25°C for more than 50 hrs per year.

HDU bed areas - Design Criteria - HBN 57 gives specific guidance as well as SHTM 03-01 - Appendix 1 for air change rates - 10ac/hr Supply, 18°C to 25°C control range. (Capability shall be provided but not at the summer and winter external ambient design extremes against the internal maximum and minimum range conditions).

The department will be comfort cooled and controlled on a zonal basis.

Central AHU to be provided with blank section for future provision of humidification.

Post theatre recovery areas - Design Criteria - SHTM 03-01 - Appendix 1 for air change rates - 15ac/hr S&E , 18°C to 25°C control range.(Capability shall be provided but not at the summer and winter external ambient design extremes against the maximum and minimum range conditions).

Critical Care areas - Design Criteria - SHTM 03-01 - Appendix 1 for air change rates - 10ac/hr Supply , 18°C to 25°C control range.(Capability shall be provided but not at the summer and winter external ambient design extremes against the maximum and minimum range conditions). NHSL may require specific rooms to have a control range up to 28°C.

Central AHU to be provided with blank section for future provision of humidification.

16 **Corridor** ventilation may be either mechanical or where the opportunity exists natural. To be determined during detailed design with due regard to clinical functionality.

17 **Single Room WC** - SHTM 03-01 Appendix 1 suggests 3ac/hr extract air change rate only. We have applied 10ac/hr extract rate to provide a more robust rate of extract.

18 **Diagnostic Rooms** - (X Ray, CT Scanner, MRI Scanners, Gamma Camera) - air change rates listed at 8ac/hr. Actual air change rate must be derived through room heat gain analysis and actual equipment guidance.

19 **Operating Theatre Laminar Flow/UCV Requirements -** Refer to Operational Policy Documents for specific theatres which require Laminar Flow/UCV canopy style ventilation solution.

20 **Small workshop Areas -** Local Extract Ventilation (LEV) unit requirement to be determined from room equipment schedules.

21 **Note that Isolation Suite ventilation solutions for this project shall follow HBN 4 Supplement 1 Section 4 Item 4.8 Guidance i.e.**
A common departmental AHU shall be employed to provide supply air ventilation (and shall therefore employ duty & standby motors).
Isolation Rooms En Suite Extracts shall be provided with an independent Isolation Room toilet extract ventilation system.
Isolation Rooms En Suite Extracts shall be provided with either externally located 3 mtr high discharge stack in a safe location or with extract filters (H14) within a safe change housing outside the building on the suction side of the fan.
Heating & Cooling Isolation Suites shall be provided via the ventilation system.

22 **Retail Provision -** Service provisions listed are Infrastructure only for future fit-out by retailer. (Fire detection shall be provided to assist completion).

23 **Comfort Cooled Fresh Air -** Where noted as such on the matrices, this means as provided via departmental air handling plant via chilled water cooling coils.

24 **Body View Room** to be provided with ceiling cassette incorporating specialist refrigeration based cooling unit to reduce room temperature to 8°C minimum +/- 2°C. Room temperature will be achieved within two hours of plant operation.
This room will have dual function capabilty, normally at 28°C design max temperature and when required go to 8°C for storage and viewing of body.

25 Anti ligature rooms (5no. off) will be treated as sealed rooms with Supply at 6ac/hr and Extract to match to achieve a balanced pressure.

26 **Single Bedroom -** The design philosophy for ventilation is for a mixed mode operation where natural vent is encouraged which has benefits both physicological with users being partly in control, and from an energy stand point where mechanical vent loading is partly reduced (2/3rds). This strategy results in zero pressure differential regime within the room where supply and extract is balanced.

Room Function Reference Sheet.

The following table details reference templates which are used to populate cells within the environmental matrix. Refer to individual department sheets for individual room environmental conditions

Room Function	Temperature		Heating		Cooling Present	Cooling	Ventilation					Safety temperatures		Safety Notes	Lighting							Notes	Medical Location
	Design Max deg C	Design Min deg C	Type	Control		Type	Type	Supply ac/hr	Extract ac/hr	Relative Pressure	Min Filtration	Surface deg C	Water deg C		Normal lux	Night lux	Local lux	Standby Grade	Colour Rendering	Control	Plane		Group
Bathroom	28	18	Adjacent Space Transfer Air	None	No	None	Central Dirty Extract	0	10	Negative	None	43	41		200	n/a	None	A	80	Presence detection	Floor 0m	See Guidance Notes	n/a
Bedroom	25	20	Radiant Panels	Remote Sensor Adj.	Yes	Comfort Cooled Fresh Air	Central Supply Air	4	0	Balanced	G4	43	41		100	5	300	A	80	switch	Bed / Trolley 1.45m	See Guidance Notes	1
Cellular / Ward Offices	25	18	Radiant Panels	Remote Sensor Adj.	Yes	Comfort Cooled Fresh Air	Central Supply and Extract	4	3	Positive	G4	43	n/a		300	n/a	None	A	80	Switch	Desk 0.75 to 0.85m	See Guidance Notes	n/a
Changing Facilities	28	18	Radiant Panels	Remote Sensor Adj.	Yes	Comfort Cooled Fresh Air	Central Supply and Extract	5	4	Positive	G4	43	41		100	n/a	None	A	80	Presence detection	Floor 0m	See Guidance Notes	n/a
Circulation Areas	28	18	Radiant Panels	Remote Sensor Adj.	No	None	None	Refer to Guidance Notes	Refer to Guidance Notes		G4	43	41		200	n/a	None	A	80	presence detection	Floor 0m	See Guidance Notes	n/a
Circulation Areas - Entrance Lobby	28	Not Controlled	Warm Air Door Curtain	BMS Adjustable Sensor	No	None	None	0	0	Balanced	None	n/a	n/a		200	n/a	None	A	80	Presence detection	Floor 0m	See Guidance Notes	n/a
Classroom	25	18	Radiant Panels	Remote Sensor Adj.	Yes	Ceiling Cassette - Chilled Water	Central Supply and Extract	4	4	Balanced	G4	43	n/a		300	n/a	None	A	80	Switch	Desk 0.75 to 0.85m	See Guidance Notes	n/a
Common room/staff room/lounge	28	18	Radiant Panels	Remote Sensor Adj.	Yes	Comfort Cooled Fresh Air	Central Supply and Extract	6	8	Negative	G4	43	41		300	n/a	None	A	80	Switch	Floor 0m	See Guidance Notes	n/a
Consulting Room	28	18	Radiant Panels	Remote Sensor Adj.	Yes	Comfort Cooled Fresh Air	Central Supply and Extract	3	3	Balanced	G4	43	41		300	n/a	1000	A	80	Switch	Bed / Trolley 1.45m	See Guidance Notes	n/a
Clean Utility	28	18	Radiant Panels	Remote Sensor Adj.	Yes	Comfort Cooled Fresh Air	Central Supply Air	6	0	Positive	G4	43	41		150	n/a	None	A	80	Presence detection	General working plane 1m	See Guidance Notes	n/a
Dirty utility	28	18	Adjacent Space Transfer Air	None	No	None	Central Dirty Extract	0	6	Negative	None	43	60		200	n/a	None	A	80	Presence detection	Floor 0m	See Guidance Notes	n/a
Diagnostic room	25	18	Warm Air - Reheat Battery	BMS Adjustable Sensor	Yes	Comfort Cooled Fresh Air	Central Supply and Extract	8	8	Balanced	F7	43	41		300	n/a	1000	A	80	switch	General working plane 1m	See Guidance Notes	1
Eating/Drinking	28	18	Radiant Panels	Remote Sensor Adj.	Yes	Comfort Cooled Fresh Air	Central Supply and Extract	4	4	Balanced	G4	43	41		300	n/a	None	A	80	Switch	Floor 0m	See Guidance Notes	n/a
Ward Kitchen	28	18	Adjacent Space Transfer Air	None	Yes	Ceiling Cassette - Chilled Water	Central General Extract	0	6	Negative	G4	n/a	60		500	n/a	None	A	80	Switch	General working plane 1m	See Guidance Notes	n/a
Small Workshop	28	18	Radiant Panels	Remote Sensor Adj.	No	None	Central Supply and Extract	4	6	Negative	G4	43	41		300	n/a	None	A	80	Switch	Desk 0.75 to 0.85m	See Guidance Notes	n/a
IT equipment (comms server)	25	18	None	None	Yes	Ceiling Cassette - Chilled Water	Central General Extract	0	2	Negative	None	n/a	n/a		300	n/a	None	A	80	Switch	Floor 0m	See Guidance Notes	n/a
Kitchen (Commercial)	28	16	None	None	Yes	Comfort Cooled Fresh Air	Central Supply and Extract	DW172 Dependant	DW172 Dependant	Negative	G4	43	60		500	n/a	None	A	80	Switch	General working plane 1m	See Guidance Notes	n/a
Laboratory	28	18	Radiant Panels	Remote Sensor Adj.	Yes	Comfort Cooled Fresh Air	Central Supply and Extract	6	6	Balanced	F7	43	60		500	n/a	None	A	80	Switch	Desk 0.75 to 0.85m	See Guidance Notes	n/a
Laundry	28	18	Adjacent Space Transfer Air	None	No	Comfort Cooled Fresh Air	Central Supply and Extract	6	10	Negative	G4	43	60		300	n/a	None	A	80	Switch	Floor 0m	See Guidance Notes	n/a
Meeting Room	25	18	Radiant Panels	Remote Sensor Adj.	Yes	Ceiling Cassette - Chilled Water	Central Supply and Extract	4	4	Balanced	G4	43	n/a		300	n/a	None	A	80	Switch	Desk 0.75 to 0.85m	See Guidance Notes	n/a
Patient Accommodation Day	25	18	Radiant Panels	Remote Sensor Adj.	Yes	Comfort Cooled Fresh Air	Central Supply Air	4	0	Positive	G4	43	41		100	n/a	None	A	80	Switch	Bed / Trolley 1.45m	See Guidance Notes	n/a
Multi-bed Wards	25	18	Radiant Panels	Remote Sensor Adj.	Yes	Comfort Cooled Fresh Air	Central Supply Air	4	0	Positive	G4	43	41		100	5	300	A	80	switch	Bed / Trolley 1.45m	See Guidance Notes	n/a
Physiotherapy Studio	28	18	Radiant Panels	Remote Sensor Adj.	Yes	Comfort Cooled Fresh Air	Central Supply and Extract	5	6	Negative	G4	43	41		300	n/a	None	A	80	Switch / Dimmer	Floor 0m	See Guidance Notes	n/a
Body View	28	8	Radiant Panels	Remote Sensor Adj.	Yes	Ceiling Cassette - Specialist Cooling	Central Supply and Extract	4	6	Negative	G4	43	n/a		300	n/a	None	A	80	Switch	Floor 0m	See Guidance Notes	n/a
Reception	28	18	Radiant Panels	Remote Sensor Adj.	Yes	Comfort Cooled Fresh Air	Central Supply Air	3	0	Positive	G4	43	n/a		300	n/a	None	A	80	Switch	Desk 0.75 to 0.85m	See Guidance Notes	n/a

query

Room Function Reference Sheet.

The following table details reference templates which are used to populate cells within the environmental matrix. Refer to individual department sheets for individual room environmental conditions

Storage Area Med Gas	28	16	Adjacent Space Transfer Air	None	No	None	Natural ventilation	0	0	Balanced	None	n/a	n/a		200	n/a	None	A	80	Presence detection	Floor 0m	See Guidance Notes	n/a
Storage Area Equipment	28	16	Radiant Panels	Remote Sensor Adj.	No	None	Central General Extract	0	3	Negative	None	43	n/a		200	n/a	None	A	80	Presence detection	Floor 0m	See Guidance Notes	n/a
Tea Making	28	18	Adjacent Space Transfer Air	None	No	None	Central General Extract	0	5	Negative	None	43	41		200	n/a	None	A	80	Presence detection	Floor 0m	See Guidance Notes	n/a
Toilet	28	18	Adjacent Space Transfer Air	None	No	None	Central Dirty Extract	0	10	Negative	None	43	41		200	n/a	None	A	80	Presence detection	Floor 0m	See Guidance Notes	n/a
Waiting Room	28	18	Radiant Panels	Remote Sensor Adj.	Yes	Comfort Cooled Fresh Air	Central Supply and Extract	5	5	Balanced	G4	43	n/a		300	n/a	None	A	80	Switch	Floor 0m	See Guidance Notes	n/a
Treatment Room	28	18	Radiant Panels	Remote Sensor Adj.	Yes	Comfort Cooled Fresh Air	Central Supply Air	10	0	Positive	F7	43	41		500	n/a	1000	A	90	Switch	Bed / Trolley 1.45m	See Guidance Notes	n/a
Isolation Lobby	25	18	Warm Air - Reheat Battery	BMS Adjustable Sensor	Yes	Comfort Cooled Fresh Air	HBN4 Dependant	HBN4 Dependant	HBN4 Dependant		F7	43	n/a		200	n/a	None	A	80	Presence detection	Floor 0m	See Guidance Notes	n/a
Resusitation Bay	25	21	Radiant Panels	BMS Adjustable Sensor	Yes	Comfort Cooled Fresh Air	Central Supply and Extract	10	6	Positive	G4	43	41		500	n/a	1000	A	80	Switch	Bed / Trolley 1.45m	See Guidance Notes	n/a
Circulation Equipment Storage Bays	28	16	Adjacent Space Transfer Air	None	No	None	Central General Extract	0	3	Negative	None	43	n/a		200	n/a	None	A	80	Presence detection	Floor 0m	See Guidance Notes	n/a
Isolation Bedroom	25	21	Adjacent Space Transfer Air	BMS Adjustable Sensor	Yes	Comfort Cooled Fresh Air	HBN4 Dependant	HBN4 Dependant	HBN4 Dependant	Balanced	F7	43	41		100	5	300	A	80	Switch	Bed / Trolley 1.45m	See Guidance Notes	1
Operating Theatre Suite	25	18	Warm Air - Reheat Battery	BMS Adjustable Sensor	Yes	Comfort Cooled Fresh Air	In line with SHTM 03-01	In line with SHTM 03-01	In line with SHTM 03-01		F7	43	n/a		500	n/a	10,000 - 100,000	A	80	Switch	Bed / Trolley 1.45m	See Guidance Notes	n/a
Disposal Hold	28	18	Adjacent Space Transfer Air	None	No	None	Central Dirty Extract	0	6	Negative	None	43	n/a		100	n/a	None	A	90	Presence detection	Floor 0m	See Guidance Notes	n/a
DSR	28	18	Adjacent Space Transfer Air	None	No	None	Central Dirty Extract	0	6	Negative	None	43	n/a		100	n/a	None	A	90	Presence detection	Floor 0m	See Guidance Notes	n/a
Resus Trolley bay	25	18	Radiant Panels	Remote Sensor Adj.	Yes	Comfort Cooled Fresh Air	Central Supply Air	0	0	Balanced	None	43	n/a		500	n/a	None	A	90	Switch	Bed / Trolley 1.45m	See Guidance Notes	n/a
Baby Feeding Room / Nappy Change	25	18	Adjacent Space Transfer Air	None	No	None	Central Dirty Extract	0	10	Negative	None	43	41		100	n/a	None	A	80	Presence detection	Floor 0m	See Guidance Notes	n/a
Relatives Overnight Stay	25	20	Radiant Panels	Remote Sensor Adj.	Yes	Comfort Cooled Fresh Air	Central Supply and Extract	4	0	Positive	G4	43	41		100	n/a	None	A	80	Switch	Bed / Trolley 1.45m	See Guidance Notes	n/a
Pantry	28	18	Radiant Panels	Remote Sensor Adj.	Yes	Comfort Cooled Fresh Air	Central Supply and Extract	6	8	Negative	G4	43	41		300	n/a	None	A	80	Switch	Floor 0m	See Guidance Notes	n/a
Linen Bay	28	16	Adjacent Space Transfer Air	None	No	None	Central Supply and Extract	0	3	Negative	None	43	n/a		200	n/a	None	A	80	Presence detection	Floor 0m	See Guidance Notes	n/a
Multi Disciplinary Work Areas	25	18	Radiant Panels	Remote Sensor Adj.	Yes	Comfort Cooled Fresh Air	Central Supply and Extract	6	4	Positive	G4	43	n/a		300	n/a	1000	A	80	Switch	Desk 0.75 to 0.85m	See Guidance Notes	n/a
Open Plan Office	25	18	Radiant Panels	Remote Sensor Adj.	Yes	Comfort Cooled Fresh Air	Central Supply and Extract	6	4	Positive	G4	43	n/a		300	n/a	None	A	80	Switch	Desk 0.75 to 0.85m	See Guidance Notes	n/a
Equipment Decontamination	28	18	Radiant Panels	Remote Sensor Adj.	Yes	Comfort Cooled Fresh Air	Central Supply Air	6	0	Positive	G4	43	41		200	n/a	None	A	80	Presence detection	General working plane 1m	See Guidance Notes	n/a
Circulation Phone Both	28	18	Radiant Panels	Remote Sensor Adj.	No	None	Central Supply and Extract	0	0	Balanced	G4	43	41		200	n/a	None	A	80	Presence detection	Floor 0m	See Guidance Notes	n/a
Recovery Bay / Recovery Room	28	20	Radiant Panels	Remote Sensor Adj.	Yes	Comfort Cooled Fresh Air	Central Supply and Extract	15	15	Balanced	G4	43	41		500	n/a	1000	A	80	switch	Bed / Trolley 1.45m	See Guidance Notes	n/a
IPS Room	Manufacturer Dependant	Manufacturer Dependant	Adjacent Space Transfer Air	None	No	None	None	0	3	Negative	None	43	n/a		200	Not Applicable	None	A	80	Switch	Floor 0m	See Guidance Notes	n/a

RHSC / DCN Environmental Matrix

Dept	Dept	Room Name	Qty		Room Function	ADB Code	Temp (max)	Temp (min)	Heating Type	Heating Control	Cooling (present)	Cooling (type)	Ventilation (type)	Supply (ac/hr)	Extract (ac/hr)	Relative pressure	Min filtration	Surface temp	Water temp	Safety Notes	Normal lux	Night lux	Local lux	Standby grade	Colour render	Control	Plane		Medical Location
					Bathroom		28	20	Adjacent Space Transfer Air	None	No	None	Central Dirty Extract	0	10	Negative	None	43	41		200	n/a	None	A	80	Presence detection	Floor 0m	See Guidance Notes	n/a
					Bedroom		25	18	Radiant Panels	Remote Sensor Adj.	Yes	Comfort Cooled Fresh Air	Natural & Central Supply Air	4	via ensuite	Balanced	G4	43	41		100	5	300	A	80	Switch / Dimmer	Bed / Trolley 1.45m	See Guidance Notes	1
					Cellular / Ward Offices		25	18	Radiant Panels	Remote Sensor Adj.	Yes	Comfort Cooled Fresh Air	Central Supply and Extract	4	4	Balanced	G4	43	n/a		300	n/a	None	A	80	Switch	Desk 0.75 to 0.85m	See Guidance Notes	n/a
					Changing Facilities		28	18	Radiant Panels	Remote Sensor Adj.	Yes	Comfort Cooled Fresh Air	Central Supply and Extract	6	10	positive to wc	G4	43	41		100	n/a	None	A	80	Presence detection	Floor 0m	See Guidance Notes	n/a
					Circulation Areas		28	18	underfloor heating / none to suit location	BMS Adjustable Sensor	No	None	Central Supply and Extract or to suit location	to suit location	to suit location	Balanced	G4	43	41		200	n/a	None	A	80	presence detection	Floor 0m	See Guidance Notes	n/a
					Circulation Areas - Entrance Lobby		28	Not Controlled	Warm Air Door Curtain	BMS Adjustable Sensor	No	None	None	0	0	Balanced	None	n/a	n/a		200	n/a	None	A	80	Presence detection	Floor 0m	See Guidance Notes	n/a
					Classroom		25	18	Radiant Panels	Remote Sensor Adj.	Yes	Ceiling Cassette - Chilled Water	Central Supply and Extract	10 l/s per person	10 l/s per person	Balanced	G4	43	41		300	n/a	None	A	80	Switch	Desk 0.75 to 0.85m	See Guidance Notes	n/a
					Common room/staff room/lounge		28	18	Radiant Panels	Remote Sensor Adj.	Yes	Comfort Cooled Fresh Air	Central Supply and Extract	6	8	Negative	G4	43	41		300	n/a	None	A	80	Switch	Floor 0m	See Guidance Notes	n/a
					Consulting Room		28	18	Radiant Panels	Remote Sensor Adj.	Yes	Comfort Cooled Fresh Air	Central Supply and Extract	3	3	Balanced	G4	43	41		300	n/a	1000	A	80	Switch	Bed / Trolley 1.45m	See Guidance Notes	1
					Clean Utility		28	18	Radiant Panels	Remote Sensor Adj.	Yes	Comfort Cooled Fresh Air	Central Supply Air	6	0	Positive	G4	43	41		150	n/a	None	A	80	Presence detection	General working plane 1m	See Guidance Notes	n/a
					Dirty utility		28	18	Adjacent Space Transfer Air	None	No	None	Central Dirty Extract	0	6	Negative	None	43	41		200	n/a	None	A	80	Presence detection	Floor 0m	See Guidance Notes	n/a
					Diagnostic room		25	18	Warm Air - Reheat Battery	BMS Adjustable Sensor	Yes	Comfort Cooled	Central Supply and Extract	to suit location	to suit location	Balanced	F7	43	41		300	n/a	1000	A	80	Switch / Dimmer	General working plane 1m	See Guidance Notes	1
					Eating/Drinking		28	18	Radiant Panels	Remote Sensor Adj.	Yes	Comfort Cooled Fresh Air	Central Supply and Extract	10 l/s per person	10 l/s per person	Balanced	G4	43	41		300	n/a	None	A	80	Switch	Floor 0m	See Guidance Notes	n/a
					Ward Kitchen		28	18	Adjacent Space Transfer Air	None	Yes	Ceiling Cassette - Chilled Water	Central General Extract	0	6	Negative	G4	n/a	60		500	n/a	None	A	80	Switch	General working plane 1m	See Guidance Notes	n/a
					Small Workshop		28	18	Radiant Panels	Remote Sensor Adj.	Yes	Comfort Cooled Fresh Air	Central Supply and Extract	4	6	Negative	G4	43	41		300	n/a	None	A	80	Switch	Desk 0.75 to 0.85m	See Guidance Notes	n/a
					IT equipment (comms server)		25	18	None	None	Yes	Ceiling Cassette - Chilled Water	Central General Extract	0	2	Negative	None	n/a	n/a		300	n/a	None	A	80	Switch	Floor 0m	See Guidance Notes	n/a
					Kitchen (Commercial)		28	16	None	None	Yes	Ceiling Cassette - Chilled Water	Central Supply and Extract	DW172 Dependant	DW172 Dependant	Negative	G4	43	60		500	n/a	None	A	80	Switch	General working plane 1m	See Guidance Notes	n/a
					Laboratory		25	18	Radiant Panels	Remote Sensor Adj.	Yes	Ceiling Cassette - Chilled Water	Central Supply and Extract	6	6	Balanced	F7	43	60		500	n/a	None	A	80	Switch	Desk 0.75 to 0.85m	See Guidance Notes	n/a
					Laundry		28	18	Adjacent Space Transfer Air	None	Yes	Comfort Cooled Fresh Air	Central Supply and Extract	6	10	Negative	G4	43	60		300	n/a	None	A	80	Switch	Floor 0m	See Guidance Notes	n/a
					Meeting Room		25	18	Radiant Panels	Remote Sensor Adj.	Yes	Ceiling Cassette - Chilled Water	Central Supply and Extract	10 l/s per person	10 l/s per person	Balanced	G4	43	n/a		300	n/a	None	A	80	Switch	Desk 0.75 to 0.85m	See Guidance Notes	n/a
					Patient Accommodation Day		25	18	Radiant Panels	Remote Sensor Adj.	Yes	Comfort Cooled Fresh Air	Central Supply Air	4	4	Balanced	G4	43	41		100	n/a	None	A	80	Switch	Bed / Trolley 1.45m	See Guidance Notes	n/a
					Multi-bed Wards		25	18	Radiant Panels	Remote Sensor Adj.	Yes	Comfort Cooled Fresh Air	Natural and Central Supply Air	4	via ensuite	positive to ensuite	G4	43	41		100	5	300	A	80	switch / dimmer	Bed / Trolley 1.45m	See Guidance Notes	n/a
					Physiotherapy Studio		28	18	Radiant Panels	Remote Sensor Adj.	Yes	Comfort Cooled Fresh Air	Central Supply and Extract	5	6	Negative	G4	43	41		300	n/a	None	A	80	Switch / Dimmer	Floor 0m	See Guidance Notes	n/a
					Body View		28	8	Radiant Panels	Remote Sensor Adj.	Yes	Ceiling Cassette - Specialist Cooling	Central Supply and Extract	4	6	Negative	G4	43	n/a		300	n/a	None	A	80	Switch / Dimmer	Floor 0m	See Guidance Notes	n/a
					Reception		28	18	Radiant Panels	Remote Sensor Adj.	Yes	Comfort Cooled Fresh Air	Central Supply Air	4	4	Balanced	G4	43	n/a		300	n/a	None	A	80	Switch	Desk 0.75 to 0.85m	See Guidance Notes	n/a
					Storage Area Med Gas		28	16	Frost protection	Room Thermostat	No	None	Natural ventilation	0	0	n/a	None	n/a	n/a		200	n/a	None	A	80	Presence detection	Floor 0m	See Guidance Notes	n/a
					Storage Area Equipment		28	16	Radiant Panels	Remote Sensor Adj.	No	None	Central General Extract	0	3	Negative	None	43	n/a		200	n/a	None	A	80	Presence detection	Floor 0m	See Guidance Notes	n/a
					Tea Making		28	18	Adjacent Space Transfer Air	None	No	None	Central General Extract	0	5	Negative	None	43	41		200	n/a	None	A	80	Presence detection	Floor 0m	See Guidance Notes	n/a
					Toilet		28	18	Adjacent Space Transfer Air	None	No	None	Central Dirty Extract	0	10	Negative	None	43	41		200	n/a	None	A	80	Presence detection	Floor 0m	See Guidance Notes	n/a
					Waiting Room		28	18	Radiant Panels	Remote Sensor Adj.	Yes	Comfort Cooled Fresh Air	Central Supply and Extract	5	5	Balanced	G4	43	n/a		300	n/a	None	A	80	Switch	Floor 0m	See Guidance Notes	n/a
					Treatment Room		28	18	Radiant Panels	Remote Sensor Adj.	Yes	Comfort Cooled Fresh Air	Central Supply Air	10	0	Positive	F7	43	41		500	n/a	1000	A	90	Switch	Bed / Trolley 1.45m	See Guidance Notes	n/a
					Isolation Lobby		25	18	Warm Air - Reheat Battery	Local / BMS Adjustable Sensor	Yes	Comfort Cooled Fresh Air	Central Supply	69	0	Positive	F7	43	n/a		200	n/a	None	A	80	Presence detection	Floor 0m	See Guidance Notes	n/a
					Resusitation Bay		25	21	Radiant Panels	Remote Sensor Adj.	Yes	Comfort Cooled Fresh Air	Central Supply and Extract	10	6	Positive	G4	43	41		500	n/a	1000	A	80	Switch	Bed / Trolley 1.45m	See Guidance Notes	n/a
					Circulation Equipment Storage Bays		28	16	Adjacent Space Transfer Air	None	No	None	Central General Extract	0	3	Negative	None	43	n/a		200	n/a	None	A	80	Presence detection	Floor 0m	See Guidance Notes	n/a
					Isolation Bedroom		25	21	Adjacent Space Transfer Air	BMS Adjustable Sensor	Yes	Comfort Cooled Fresh Air	Supply via lobby	10	0	Balanced	F7	43	41		100	5	300	A	80	Switch / Dimmer	Bed / Trolley 1.45m	See Guidance Notes	1
					Operating Theatre Suite		25	18	warm air via AHU Battery	Local / BMS Adjustable Sensor	Yes	Comfort Cooled Fresh Air	Central Supply and Extract	In line with SHTM 03-01	In line with SHTM 03-01		F7	43	41		500	n/a	10,000 - 100,000	A	80	Switch	Bed / Trolley 1.45m	See Guidance Notes	n/a
					Disposal Hold		28	18	Adjacent Space Transfer Air	None	No	None	Central Dirty Extract	0	10	Negative	None	43	n/a		100	n/a	None	A	90	Presence detection	Floor 0m	See Guidance Notes	n/a
					DSR		28	18	Adjacent Space Transfer Air	None	No	None	Central Dirty Extract	0	6	Negative	None	43	60		100	n/a	None	A	90	Presence detection	Floor 0m	See Guidance Notes	n/a
					Resus Trolley bay		28	18	Adjacent Space Transfer Air	None	No	None	None	0	0	n/a	None	43	n/a		500	n/a	None	A	90	Switch	Bed / Trolley 1.45m	See Guidance Notes	n/a
					Baby Feeding		25	18	Radiant Panels	Remote Sensor Adj.	No	None	Central Supply Air	5	0	Positive	G4	43	41		100	n/a	None	A	80	Presence detection	Floor 0m	See Guidance Notes	n/a
					Nappy Change		25	18	Radiant Panels	Remote Sensor Adj.	No	None	Central Dirty Extract	0	10	Negative	None	43	41		100	n/a	None	A	80	Presence detection	Floor 0m	See Guidance Notes	n/a
					Relatives Overnight Stay		28	20	Radiant Panels	Remote Sensor Adj.	Yes	Comfort Cooled Fresh Air	Central Supply and Extract	4	0	Positive	G4	43	41		100	n/a	None	A	80	Switch	Bed / Trolley 1.45m	See Guidance Notes	n/a
					Pantry		28	18	Radiant Panels	Remote Sensor Adj.	Yes	Comfort Cooled Fresh Air	Central Supply and Extract	6	8	Negative	G4	43	41		300	n/a	None	A	80	Switch	Floor 0m	See Guidance Notes	n/a
					Linen Bay		28	16	Adjacent Space Transfer Air	None	No	None	Central Extract	0	3	Negative	None	43	n/a		200	n/a	None	A	80	Presence detection	Floor 0m	See Guidance Notes	n/a
					Multi Disciplinary Work Areas		25	18	Radiant Panels	Remote Sensor Adj.	Yes	Comfort Cooled Fresh Air	Central Supply and Extract	4	4	Balanced	G4	43	n/a		300	n/a	1000	A	80	Switch	Desk 0.75 to 0.85m	See Guidance Notes	n/a
					Open Plan Office		25	18	Radiant Panels	Remote Sensor Adj.	Yes	Comfort Cooled Fresh Air	Central Supply and Extract	4	4	Balanced	G4	43	n/a		300	n/a	None	A	80	Switch	Desk 0.75 to 0.85m	See Guidance Notes	n/a
					Equipment Decontamination		28	18	Radiant Panels	Remote Sensor Adj.	Yes	Comfort Cooled Fresh Air	Central Supply and Extract	7	10	Negative	G4	43	41		200	n/a	None	A	80	Presence detection	General working plane 1m	See Guidance Notes	n/a
					Circulation Phone Booth		28	18	Radiant Panels	Remote Sensor Adj.	No	None	n/a	0	0	n/a	n/a	n/a	n/a		200	n/a	None	A	80	Presence detection	Floor 0m	See Guidance Notes	n/a
					Recovery Bay / Recovery Room		28	20	Radiant Panels	Remote Sensor Adj.	Yes	Comfort Cooled Fresh Air	Central Supply and Extract	15	15	Balanced	G4	43	41		500	n/a	1000	A	80	Switch / Dimmer	Bed / Trolley 1.45m	See Guidance Notes	n/a
					Staff Base		28	18	Radiant Panels	Remote Sensor Adj.	No	None	Central Supply and Extract	10l/s/per person	10l/s/per person	Balanced	G4	n/a	n/a		200/300	n/a	None	A	80	Switch / Dimmer	Desk 0.75 to 0.85m	See Guidance Notes	n/a

Dept	Dept	Room Name	Qty		Room Function	ADB Code	Temp (max)	Temp (min)	Heating Type	Heating Control	Cooling (present)	Cooling (type)	Ventilation (type)	Supply (ac/hr)	Extract (ac/hr)	Relative pressure	Min filtration	Surface temp	Water temp	Safety Notes	Normal lux	Night lux	Local lux	Standby grade	Colour render	Control	Plane	Medical Location	
		Main Entrance Draught Lobby	2	10.0	Circulation Areas - Entrance Lobby	G0800-01	28	Not Controlled	Warm Air Door Curtain	BMS Adjustable Sensor	No	None	None	0	0	Balanced	None	n/a	n/a		200	n/a	None	A	80	Presence detection	Floor 0m	See Guidance Notes	n/a
		Parking Bay: 6 wheelchairs	1	4.0	Circulation Equipment Storage Bays	G0180-02	28	16	Adjacent Space Transfer Air	None	No	None	Central General Extract	0	3	Negative	None	43	n/a		200	n/a	None	A	80	Presence detection	Floor 0m	See Guidance Notes	n/a
		Parking Bay: 3 accident trolleys & 3 wheelchairs	1	12.0	Circulation Equipment Storage Bays	G0180-02	28	16	Adjacent Space Transfer Air	None	No	None	Central General Extract	0	3	Negative	None	43	n/a		200	n/a	None	A	80	Presence detection	Floor 0m	See Guidance Notes	n/a
		Reception:2 staff	1	16.0	Reception	J0132-01	28	18	Radiant Panels	Remote Sensor Adj.	Yes	Comfort Cooled Fresh Air	Central Supply Air	4	4	Balanced	G4	43	n/a		300	n/a	None	A	80	Switch	Desk 0.75 to 0.85m	See Guidance Notes	n/a
		Waiting Area inc Play Area	1	63.0	Waiting Room	J0132-02	28	18	Radiant Panels	Remote Sensor Adj.	Yes	Comfort Cooled Fresh Air	Central Supply and Extract	5	5	Balanced	G4	43	n/a		300	n/a	None	A	80	Switch	Floor 0m	See Guidance Notes	n/a
		WC - Wheelchair accessible	2	4.5	Toilet	V0922	28	18	Adjacent Space Transfer Air	None	No	None	Central Dirty Extract	0	10	Negative	None	43	41		200	n/a	None	A	80	Presence detection	Floor 0m	See Guidance Notes	n/a

RHSC / DCN Environmental Matrix

Dept	Dept	Room Name	Qty		Room Function	ADB Code	Temp (max)	Temp (min)	Heating Type	Heating Control	Cooling (present)	Cooling (type)	Ventilation (type)	Supply (ac/hr)	Extract (ac/hr)	Relative pressure	Min filtration	Surface temp	Water temp	Safety Notes	Normal lux	Night lux	Local lux	Standby grade	Colour render	Control	Plane	Medical Location	
A1	Emergency Department	Nappy Change	1	4.0	Toilet	V1131	28	18	Adjacent Space Transfer Air	None	No	None	Central Dirty Extract	0	10	Negative	None	43	41		200	n/a	None	A	80	Presence detection	Floor 0m	See Guidance Notes	n/a
		Baby Infant / Feeding Room	1	4.0	baby Feeding	S0012	25	18	Radiant Panels	Remote Sensor Adj.	No	None	Central Supply Air	5	0	Positive	G4	43	41		100	n/a	None	A	80	Presence detection	Floor 0m	See Guidance Notes	n/a
		Triage Room	1	16.0	Consulting Room	X0242-03	28	18	Radiant Panels	Remote Sensor Adj.	Yes	Comfort Cooled Fresh Air	Central Supply and Extract	3	3	Balanced	G4	43	41		300	n/a	1000	A	80	Switch	Bed / Trolley 1.45m	See Guidance Notes	1
		Treatment Room: Dual Access (Mental Health)	10	16.0	Treatment Room	X0242-04	28	18	Radiant Panels	Remote Sensor Adj.	Yes	Comfort Cooled Fresh Air	Central Supply Air	10	0	Positive	F7	43	41		500	n/a	1000	A	90	Switch	Bed / Trolley 1.45m	See Guidance Notes	n/a
		Treatment Room: Single Access	4	14.0	Treatment Room	X0242-02	28	18	Radiant Panels	Remote Sensor Adj.	Yes	Comfort Cooled Fresh Air	Central Supply Air	10	0	Positive	F7	43	41		500	n/a	1000	A	90	Switch	Bed / Trolley 1.45m	See Guidance Notes	n/a
		WC - Wheelchair accessible	2	4.5	Toilet	V0922	28	18	Adjacent Space Transfer Air	None	No	None	Central Dirty Extract	0	10	Negative	None	43	41		200	n/a	None	A	80	Presence detection	Floor 0m	See Guidance Notes	n/a
		Plaster Suite (2 bays)	1	24.0	Consulting Room	X0206	28	18	Radiant Panels	Remote Sensor Adj.	Yes	Comfort Cooled Fresh Air	Central Supply and Extract	3	3	Balanced	G4	43	41		300	n/a	1000	A	80	Switch	Bed / Trolley 1.45m	See Guidance Notes	1
		Store - Plaster	1	6.0	Storage Area Equipment	W1585-??	28	16	Radiant Panels	Remote Sensor Adj.	No	None	Central General Extract	0	3	Negative	None	43	n/a		200	n/a	None	A	80	Presence detection	Floor 0m	See Guidance Notes	n/a
		Quiet Room	1	12.0	Cellular / Ward Offices	M0251	25	18	Radiant Panels	Remote Sensor Adj.	Yes	Comfort Cooled Fresh Air	Central Supply and Extract	4	4	Balanced	G4	43	n/a		300	n/a	None	A	80	Switch	Desk 0.75 to 0.85m	See Guidance Notes	n/a
		Supplies Base	1	10.0	Storage Area Equipment	W1585-??	28	16	Radiant Panels	Remote Sensor Adj.	No	None	Central General Extract	0	3	Negative	None	43	n/a		200	n/a	None	A	80	Presence detection	Floor 0m	See Guidance Notes	n/a
		Washdown Room	1	16.0	Dirty utility	Y0431	28	18	Adjacent Space Transfer Air	None	No	None	Central Dirty Extract	0	6	Negative	None	43	41		200	n/a	None	A	80	Presence detection	Floor 0m	See Guidance Notes	n/a
		General X-Ray Room	1	33.0	Diagnostic room	E0128	25	18	Warm Air - Reheat Battery	BMS Adjustable Sensor	Yes	Comfort Cooled	Central Supply and Extract	to suit location	to suit location	Balanced	F7	43	41		300	n/a	1000	A	80	Switch / Dimmer	General working plane 1m	See Guidance Notes	1
		Consultant Psychiatrist / Psychologist Office	1	20.5	Cellular / Ward Offices	M0251	25	18	Radiant Panels	Remote Sensor Adj.	Yes	Comfort Cooled Fresh Air	Central Supply and Extract	4	4	Balanced	G4	43	n/a		300	n/a	None	A	80	Switch	Desk 0.75 to 0.85m	See Guidance Notes	n/a
		Changing Cubicle	1	4.0	Changing Facilities	V0726	28	18	Radiant Panels	Remote Sensor Adj.	Yes	Comfort Cooled Fresh Air	Central Supply and Extract	6	10	positive to wc	G4	43	41		100	n/a	None	A	80	Presence detection	Floor 0m	See Guidance Notes	n/a
		Resuscitation Room: 2 places	2	50.0	Resusitation Bay	X0242-06	25	21	Radiant Panels	Remote Sensor Adj.	Yes	Comfort Cooled Fresh Air	Central Supply and Extract	10	6	Positive	G4	43	41		500	n/a	1000	A	80	Switch	Bed / Trolley 1.45m	See Guidance Notes	n/a
		Sitting Room	1	16.0	Common room/staff room/lounge	D1120	28	18	Radiant Panels	Remote Sensor Adj.	Yes	Comfort Cooled Fresh Air	Central Supply and Extract	6	8	Negative	G4	43	41		300	n/a	None	A	80	Switch	Floor 0m	See Guidance Notes	n/a
		WC - Wheelchair accessible	1	4.5	Toilet	V0922	28	18	Adjacent Space Transfer Air	None	No	None	Central Dirty Extract	0	10	Negative	None	43	41		200	n/a	None	A	80	Presence detection	Floor 0m	See Guidance Notes	n/a
		Body Viewing Room	1	10.0	Body View	S0027-01	28	8	Radiant Panels	Remote Sensor Adj.	Yes	Ceiling Cassette - Specialist Cooling	Central Supply and Extract	4	6	Negative	G4	43	n/a		300	n/a	None	A	80	Switch / Dimmer	Floor 0m	See Guidance Notes	n/a
		Laboratory - Near Patient Testing / Status	1	8.0	Laboratory	L1308	25	18	Radiant Panels	Remote Sensor Adj.	Yes	Ceiling Cassette - Chilled Water	Central Supply and Extract	6	6	Balanced	F7	43	60		500	n/a	None	A	80	Switch	Desk 0.75 to 0.85m	See Guidance Notes	n/a
		Dirty Utility	1	11.0	Dirty utility	Y0431	28	18	Adjacent Space Transfer Air	None	No	None	Central Dirty Extract	0	6	Negative	None	43	41		200	n/a	None	A	80	Presence detection	Floor 0m	See Guidance Notes	n/a
		Pantry - Staff / Patient	1	5.0	Pantry	P0627	28	18	Radiant Panels	Remote Sensor Adj.	Yes	Comfort Cooled Fresh Air	Central Supply and Extract	6	8	Negative	G4	43	41		300	n/a	None	A	80	Switch	Floor 0m	See Guidance Notes	n/a
		WC - Staff	2	3.0	Toilet	V1010-03	28	18	Adjacent Space Transfer Air	None	No	None	Central Dirty Extract	0	10	Negative	None	43	41		200	n/a	None	A	80	Presence detection	Floor 0m	See Guidance Notes	n/a
		Staff Shower: ambulant	2	2.5	Bathroom	V1736	28	20	Adjacent Space Transfer Air	None	No	None	Central Dirty Extract	0	10	Negative	None	43	41		200	n/a	None	A	80	Presence detection	Floor 0m	See Guidance Notes	n/a
		Male Staff Changing Room and Lockers: 20 places	1	11.5	Changing Facilities	V0726	28	18	Radiant Panels	Remote Sensor Adj.	Yes	Comfort Cooled Fresh Air	Central Supply and Extract	6	10	positive to wc	G4	43	41		100	n/a	None	A	80	Presence detection	Floor 0m	See Guidance Notes	n/a
		Female Staff Changing and Lockers: 30 places	1	16.0	Changing Facilities	V0726	28	18	Radiant Panels	Remote Sensor Adj.	Yes	Comfort Cooled Fresh Air	Central Supply and Extract	6	10	positive to wc	G4	43	41		100	n/a	None	A	80	Presence detection	Floor 0m	See Guidance Notes	n/a
		Beverage Bay	1	3.0	Tea Making	P0625	28	18	Adjacent Space Transfer Air	None	No	None	Central General Extract	0	5	Negative	None	43	41		200	n/a	None	A	80	switch	Floor 0m	See Guidance Notes	n/a
		Secretary/Filing Office	1	18.0	Cellular / Ward Offices	M0251	25	18	Radiant Panels	Remote Sensor Adj.	Yes	Comfort Cooled Fresh Air	Central Supply and Extract	4	4	Balanced	G4	43	n/a		300	n/a	None	A	80	Switch	Desk 0.75 to 0.85m	See Guidance Notes	n/a
		Ward Manager's Office	1	16.0	Cellular / Ward Offices	M0251	25	18	Radiant Panels	Remote Sensor Adj.	Yes	Comfort Cooled Fresh Air	Central Supply and Extract	4	4	Balanced	G4	43	n/a		300	n/a	None	A	80	Switch	Desk 0.75 to 0.85m	See Guidance Notes	n/a
		Admin Office	1	20.5	Cellular / Ward Offices	M0251	25	18	Radiant Panels	Remote Sensor Adj.	Yes	Comfort Cooled Fresh Air	Central Supply and Extract	4	4	Balanced	G4	43	n/a		300	n/a	None	A	80	Switch	Desk 0.75 to 0.85m	See Guidance Notes	n/a
		Interview/Meeting Room: 6 persons	1	9.0	Meeting Room	H1313-02	25	18	Radiant Panels	Remote Sensor Adj.	Yes	Ceiling Cassette - Chilled Water	Central Supply and Extract	10 l/s per person	10 l/s per person	Balanced	G4	43	n/a		300	n/a	None	A	80	Switch	Desk 0.75 to 0.85m	See Guidance Notes	n/a
		Store - Equipment & Supplies	1	18.0	Storage Area Equipment	W1585	28	16	Radiant Panels	Remote Sensor Adj.	No	None	Central General Extract	0	3	Negative	None	43	n/a		200	n/a	None	A	80	Presence detection	Floor 0m	See Guidance Notes	n/a
		Linen Bay (1 Trolley)	1	1.5	Linen Bay	W1594-01	28	16	Adjacent Space Transfer Air	None	No	None	Central Extract	0	3	Negative	None	43	n/a		200	n/a	None	A	80	Presence detection	Floor 0m	See Guidance Notes	n/a
		Store - Stock & Sterile Supplies	1	18.0	Storage Area Equipment	W1585-??	28	16	Radiant Panels	Remote Sensor Adj.	No	None	Central General Extract	0	3	Negative	None	43	n/a		200	n/a	None	A	80	Presence detection	Floor 0m	See Guidance Notes	n/a
		Store - Dispensing Drugs	1	8.0	Storage Area Equipment	W1585-??	28	16	Radiant Panels	Remote Sensor Adj.	No	None	Central General Extract	0	3	Negative	None	43	n/a		200	n/a	None	A	80	Presence detection	Floor 0m	See Guidance Notes	n/a
		Store - Major Incident / Ambulance Equipment	1	6.0	Storage Area Equipment	W1585-??	28	16	Radiant Panels	Remote Sensor Adj.	No	None	Central General Extract	0	3	Negative	None	43	n/a		200	n/a	None	A	80	Presence detection	Floor 0m	See Guidance Notes	n/a
		Store - Medical Gas Cylinders	1	3.0	Storage Area Med Gas	W1585-??	28	16	Frost protection	Room Thermostat	No	None	Natural ventilation	0	0	n/a	None	n/a	n/a		200	n/a	None	A	80	Presence detection	Floor 0m	See Guidance Notes	n/a
		Disposal Hold	1	10.0	Disposal Hold	Y0646	28	18	Adjacent Space Transfer Air	None	No	None	Central Dirty Extract	0	10	Negative	None	43	n/a		100	n/a	None	A	90	Presence detection	Floor 0m	See Guidance Notes	n/a
		DSR	1	7.0	DSR	Y1510	28	18	Adjacent Space Transfer Air	None	No	None	Central Dirty Extract	0	6	Negative	None	43	60		100	n/a	None	A	90	Presence detection	Floor 0m	See Guidance Notes	n/a
A2	Paediatric Acute Receiving Unit - 34 Beds	4 Bed Room	1	63.0	Multi-bed Wards	B0405	25	18	Radiant Panels	Remote Sensor Adj.	Yes	Comfort Cooled Fresh Air	Natural and Central Supply Air	4	via ensuite	positive to ensuite	G4	43	41		100	5	300	A	80	switch / dimmer	Bed / Trolley 1.45m	See Guidance Notes	n/a
		En-suite wheelchair-accessible WC, Shower & wash	1	6.0	Bathroom	V1643	28	20	Adjacent Space Transfer Air	None	No	None	Central Dirty Extract	0	10	Negative	None	43	41		200	n/a	None	A	80	Presence detection	Floor 0m	See Guidance Notes	n/a
		Single Bedroom	6	17.0	Bedroom	B0305-01	25	18	Radiant Panels	Remote Sensor Adj.	Yes	Comfort Cooled Fresh Air	Natural & Central Supply Air	4	via ensuite	Balanced	G4	43	41		100	5	300	A	80	Switch / Dimmer	Bed / Trolley 1.45m	See Guidance Notes	1
		En-suite wheelchair-accessible WC, Shower & wash	6	4.5	Bathroom	V1643	28	20	Adjacent Space Transfer Air	None	No	None	Central Dirty Extract	0	10	Negative	None	43	41		200	n/a	None	A	80	Presence detection	Floor 0m	See Guidance Notes	n/a
		Reception/Staff Base	1	6.0	Reception	J0132-01	28	18	Radiant Panels	Remote Sensor Adj.	Yes	Comfort Cooled Fresh Air	Central Supply Air	4	4	Balanced	G4	43	n/a		300	n/a	None	A	80	Switch	Desk 0.75 to 0.85m	See Guidance Notes	n/a
		Touchdown Base	4	2.0	staff base	T0151	28	18	Radiant Panels	Remote Sensor Adj.	No	None	Central Supply and Extract	10l/s/per person	10l/s/per person	Balanced	G4	n/a	n/a		200/300	n/a	None	A	80	Switch / Dimmer	Desk 0.75 to 0.85m	See Guidance Notes	n/a
		Single Isolation Bed Room	1	17.0	Isolation Bedroom	B0308	25	21	Adjacent Space Transfer Air	BMS Adjustable Sensor	Yes	Comfort Cooled Fresh Air	Supply via lobby	10	0	Balanced	F7	43	41		100	5	300	A	80	Switch / Dimmer	Bed / Trolley 1.45m	See Guidance Notes	1
		Isolation Bedroom Entrance Lobby	1	4.0	Isolation Lobby	G0510	25	18	Warm Air - Reheat Battery	Local / BMS Adjustable Sensor	Yes	Comfort Cooled Fresh Air	Central Supply	69	0	Positive	F7	43	n/a		200	n/a	None	A	80	Presence detection	Floor 0m	See Guidance Notes	n/a
		Single Bedroom (RHSC)	13	17.0	Bedroom	B0305-01	25	18	Radiant Panels	Remote Sensor Adj.	Yes	Comfort Cooled Fresh Air	Natural & Central Supply Air	4	via ensuite	Balanced	G4	43	41		100	5	300	A	80	Switch / Dimmer	Bed / Trolley 1.45m	See Guidance Notes	1
		En-suite wheelchair-accessible WC, Shower & wash	14	4.5	Bathroom	V1643	28	20	Adjacent Space Transfer Air	None	No	None	Central Dirty Extract	0	10	Negative	None	43	41		200	n/a	None	A	80	Presence detection	Floor 0m	See Guidance Notes	n/a
		4 Bed Room	2	58.5	Multi-bed Wards	B0405	25	18	Radiant Panels	Remote Sensor Adj.	Yes	Comfort Cooled Fresh Air	Natural and Central Supply Air	4	via ensuite	positive to ensuite	G4	43	41		100	5	300	A	80	switch / dimmer	Bed / Trolley 1.45m	See Guidance Notes	n/a
		En-suite wheelchair-accessible WC, Shower & wash	2	4.5	Bathroom	V1643	28	20	Adjacent Space Transfer Air	None	No	None	Central Dirty Extract	0	10	Negative	None	43	41		200	n/a	None	A	80	Presence detection	Floor 0m	See Guidance Notes	n/a
		Single Bedroom (RHSC)	2	17.0	Bedroom	B0305-01	25	18	Radiant Panels	Remote Sensor Adj.	Yes	Comfort Cooled Fresh Air	Natural & Central Supply Air	4	via ensuite	Balanced	G4	43	41		100	5	300	A	80	Switch / Dimmer	Bed / Trolley 1.45m	See Guidance Notes	1
		En-suite wheelchair-accessible WC, Shower & wash	2	4.5	Bathroom	V1643	28	20	Adjacent Space Transfer Air	None	No	None	Central Dirty Extract	0	10	Negative	None	43	41		200	n/a	None	A	80	Presence detection	Floor 0m	See Guidance Notes	n/a
		Patients' Assisted Bathroom	1	14.0	Bathroom	V1736	28	20	Adjacent Space Transfer Air	None	No	None	Central Dirty Extract	0	10	Negative	None	43	41		200	n/a	None	A	80	Presence detection	Floor 0m	See Guidance Notes	n/a
		Treatment Room	1	16.0	Treatment Room	X0105	28	18	Radiant Panels	Remote Sensor Adj.	Yes	Comfort Cooled Fresh Air	Central Supply Air	10	0	Positive	F7	43	41		500	n/a	1000	A	90	Switch	Bed / Trolley 1.45m	See Guidance Notes	n/a
		Dining / Play Room	1	37.0	Common room/staff room/lounge	D0608-01	28	18	Radiant Panels	Remote Sensor Adj.	Yes	Comfort Cooled Fresh Air	Central Supply and Extract	6	8	Negative	G4	43	41		300	n/a	None	A	80	Switch	Floor 0m	See Guidance Notes	n/a
		Patient Interview Room	1	9.0	Meeting Room	M0724	25	18	Radiant Panels	Remote Sensor Adj.	Yes	Ceiling Cassette - Chilled Water	Central Supply and Extract	10 l/s per person	10 l/s per person	Balanced	G4	43	n/a		300	n/a	None	A	80	Switch	Desk 0.75 to 0.85m	See Guidance Notes	n/a
		Head of Department Office	1	16.0	Cellular / Ward Offices	M0251	25	18	Radiant Panels	Remote Sensor Adj.	Yes	Comfort Cooled Fresh Air	Central Supply and Extract	4	4	Balanced	G4	43	n/a		300	n/a	None	A	80	Switch	Desk 0.75 to 0.85m	See Guidance Notes	n/a
		Laboratory / Finance Manager's Office	1	11.0	Cellular / Ward Offices	M0251	25	18	Radiant Panels	Remote Sensor Adj.	Yes	Comfort Cooled Fresh Air	Central Supply and Extract	4	4	Balanced	G4	43	n/a		300	n/a	None	A	80	Switch	Desk 0.75 to 0.85m	See Guidance Notes	n/a

RHSC / DCN Environmental Matrix

Dept	Dept	Room Name	Qty		Room Function	ADB Code	Temp (max)	Temp (min)	Heating Type	Heating Control	Cooling (present)	Cooling (type)	Ventilation (type)	Supply (ac/hr)	Extract (ac/hr)	Relative pressure	Min filtration	Surface temp	Water temp	Safety Notes	Normal lux	Night lux	Local lux	Standby grade	Colour render	Control	Plane	Medical Location	
		Senior Academic Staff Office	6	11.0	Cellular / Ward Offices	M0251	25	18	Radiant Panels	Remote Sensor Adj.	Yes	Comfort Cooled Fresh Air	Central Supply and Extract	4	4	Balanced	G4	43	n/a		300	n/a	None	A	80	Switch	Desk 0.75 to 0.85m	See Guidance Notes	n/a
		16 Person Office	1	80.0	Cellular / Ward Offices	M0251	25	18	Radiant Panels	Remote Sensor Adj.	Yes	Comfort Cooled Fresh Air	Central Supply and Extract	4	4	Balanced	G4	43	n/a		300	n/a	None	A	80	Switch	Desk 0.75 to 0.85m	See Guidance Notes	n/a
		WC - Staff	2	3.0	Toilet	V1010-03	28	18	Adjacent Space Transfer Air	None	No	None	Central Dirty Extract	0	10	Negative	None	43	41		200	n/a	None	A	80	Presence detection	Floor 0m	See Guidance Notes	n/a
		WC - Visitors	1	3.0	Toilet	V1010-02	28	18	Adjacent Space Transfer Air	None	No	None	Central Dirty Extract	0	10	Negative	None	43	41		200	n/a	None	A	80	Presence detection	Floor 0m	See Guidance Notes	n/a
		Clean Utility	1	12.0	Clean Utility	T0101	28	18	Radiant Panels	Remote Sensor Adj.	Yes	Comfort Cooled Fresh Air	Central Supply Air	6	0	Positive	G4	43	41		150	n/a	None	A	80	Presence detection	General working plane 1m	See Guidance Notes	n/a
		Dirty Utility	1	14.0	Dirty utility	Y0431	28	18	Adjacent Space Transfer Air	None	No	None	Central Dirty Extract	0	6	Negative	None	43	41		200	n/a	None	A	80	Presence detection	Floor 0m	See Guidance Notes	n/a
		Pantry	1	10.0	Pantry	P0627	28	18	Radiant Panels	Remote Sensor Adj.	Yes	Comfort Cooled Fresh Air	Central Supply and Extract	6	8	Negative	G4	43	41		300	n/a	None	A	80	Switch	Floor 0m	See Guidance Notes	n/a
		Resuscitation Trolley Bay	1	1.0	Resus Trolley bay	G0180-01	28	18	Adjacent Space Transfer Air	None	No	None	None	0	0	n/a	None	43	n/a		500	n/a	None	A	80	switch	Floor 0m	See Guidance Notes	n/a
		Linen Bay (1 Trolley)	2	1.5	Storage Area Equipment	W1585-??	28	16	Radiant Panels	Remote Sensor Adj.	No	None	Central General Extract	0	3	Negative	None	43	n/a		200	n/a	None	A	80	Presence detection	Floor 0m	See Guidance Notes	n/a
		Store - General	1	12.0	Storage Area Equipment	W1585	28	16	Radiant Panels	Remote Sensor Adj.	No	None	Central General Extract	0	3	Negative	None	43	n/a		200	n/a	None	A	80	Presence detection	Floor 0m	See Guidance Notes	n/a
		Store - Equipment	1	6.0	Storage Area Equipment	W1585	28	16	Radiant Panels	Remote Sensor Adj.	No	None	Central General Extract	0	3	Negative	None	43	n/a		200	n/a	None	A	80	Presence detection	Floor 0m	See Guidance Notes	n/a
		Hoist Bay	1	3.0	Circulation Equipment Storage Bays	G0180-03	28	16	Adjacent Space Transfer Air	None	No	None	Central General Extract	0	3	Negative	None	43	n/a		200	n/a	None	A	80	Presence detection	Floor 0m	See Guidance Notes	n/a
		DSR	1	7.0	DSR	Y1510	28	18	Adjacent Space Transfer Air	None	No	None	Central Dirty Extract	0	6	Negative	None	43	60		100	n/a	None	A	90	Presence detection	Floor 0m	See Guidance Notes	n/a
		Ward Kitchen	1	12.0	Ward Kitchen	P0627-01	28	18	Adjacent Space Transfer Air	None	Yes	Ceiling Cassette - Chilled Water	Central General Extract	0	6	Negative	G4	n/a	60		500	n/a	None	A	80	Switch	General working plane 1m	See Guidance Notes	n/a
		Disposal Hold	1	10.0	Disposal Hold	Y0646	28	18	Adjacent Space Transfer Air	None	No	None	Central Dirty Extract	0	10	Negative	None	43	n/a		100	n/a	None	A	90	Presence detection	Floor 0m	See Guidance Notes	n/a
A3	PARU / Emergency / Radiology Shared Support	Meeting / Case Conference Room	1	32.0	Meeting Room	H1313-03	25	18	Radiant Panels	Remote Sensor Adj.	Yes	Ceiling Cassette - Chilled Water	Central Supply and Extract	10 l/s per person	10 l/s per person	Balanced	G4	43	n/a		300	n/a	None	A	80	Switch	Desk 0.75 to 0.85m	See Guidance Notes	n/a
		Seminar & Training Room	1	32.0	Meeting Room	H1313-03	25	18	Radiant Panels	Remote Sensor Adj.	Yes	Ceiling Cassette - Chilled Water	Central Supply and Extract	10 l/s per person	10 l/s per person	Balanced	G4	43	n/a		300	n/a	None	A	80	Switch	Desk 0.75 to 0.85m	See Guidance Notes	n/a
		Staff Room	1	80.0	Common room/staff room/lounge	D0608-03	28	18	Radiant Panels	Remote Sensor Adj.	Yes	Comfort Cooled Fresh Air	Central Supply and Extract	6	8	Negative	G4	43	41		300	n/a	None	A	80	Switch	Floor 0m	See Guidance Notes	n/a
		Waiting Area (Visitors)	1	16.5	Waiting Room	J0132-02	28	18	Radiant Panels	Remote Sensor Adj.	Yes	Comfort Cooled Fresh Air	Central Supply and Extract	5	5	Balanced	G4	43	n/a		300	n/a	None	A	80	Switch	Floor 0m	See Guidance Notes	n/a
		WC - Wheelchair accessible	1	4.5	Toilet	V0922	28	18	Adjacent Space Transfer Air	None	No	None	Central Dirty Extract	0	10	Negative	None	43	41		200	n/a	None	A	80	Presence detection	Floor 0m	See Guidance Notes	n/a
		Public Telephone Booth	1	2.0	Circulation Phone Booth	G0710	28	18	Adjacent Space Transfer Air	None	No	None	n/a	0	0	n/a	n/a	n/a	n/a		200	n/a	None	A	80	Presence detection	Floor 0m	See Guidance Notes	n/a
		Reception	1	7.0	Reception	J0132-01	28	18	Radiant Panels	Remote Sensor Adj.	Yes	Comfort Cooled Fresh Air	Central Supply Air	4	4	Balanced	G4	43	n/a		300	n/a	None	A	80	Switch	Desk 0.75 to 0.85m	See Guidance Notes	n/a
		Office - 4 person	1	20.0	Cellular / Ward Offices	M0251	25	18	Radiant Panels	Remote Sensor Adj.	Yes	Comfort Cooled Fresh Air	Central Supply and Extract	4	4	Balanced	G4	43	n/a		300	n/a	None	A	80	Switch	Desk 0.75 to 0.85m	See Guidance Notes	n/a
		Staff Base	1	12.0	Cellular / Ward Offices	M0251	25	18	Radiant Panels	Remote Sensor Adj.	Yes	Comfort Cooled Fresh Air	Central Supply and Extract	4	4	Balanced	G4	43	n/a		300	n/a	None	A	80	Switch	Desk 0.75 to 0.85m	See Guidance Notes	n/a
		Single Bed Isolation Cubicle	2	26.0	Isolation Bedroom	B1401-01	25	21	Adjacent Space Transfer Air	BMS Adjustable Sensor	Yes	Comfort Cooled Fresh Air	Supply via lobby	10	0	Balanced	F7	43	41		100	5	300	A	80	Switch / Dimmer	Bed / Trolley 1.45m	See Guidance Notes	1
		Gowning Lobby	2	6.0	Isolation Lobby	G0510	25	18	Warm Air - Reheat Battery	Local / BMS Adjustable Sensor	Yes	Comfort Cooled Fresh Air	Central Supply	69	0	Positive	F7	43	n/a		200	n/a	None	A	80	Presence detection	Floor 0m	See Guidance Notes	n/a
		Single Bed Cubicle	2	26.0	Bedroom	B1401	25	18	Radiant Panels	Remote Sensor Adj.	Yes	Comfort Cooled Fresh Air	Natural & Central Supply Air	4	via ensuite	Balanced	G4	43	41		100	5	300	A	80	Switch / Dimmer	Bed / Trolley 1.45m	See Guidance Notes	1
		Open Plan Bay (4 beds)	1	104.0	Multi-bed Wards	B1609-01	25	18	Radiant Panels	Remote Sensor Adj.	Yes	Comfort Cooled Fresh Air	Natural and Central Supply Air	4	via ensuite	positive to ensuite	G4	43	41		100	5	300	A	80	switch / dimmer	Bed / Trolley 1.45m	See Guidance Notes	n/a
		Staff Base	1	4.0	Cellular / Ward Offices	M0251	25	18	Radiant Panels	Remote Sensor Adj.	Yes	Comfort Cooled Fresh Air	Central Supply and Extract	4	4	Balanced	G4	43	n/a		300	n/a	None	A	80	Switch	Desk 0.75 to 0.85m	See Guidance Notes	n/a
		Single Bed Cubicle	1	26.0	Bedroom	B1401	25	18	Radiant Panels	Remote Sensor Adj.	Yes	Comfort Cooled Fresh Air	Natural & Central Supply Air	4	via ensuite	Balanced	G4	43	41		100	5	300	A	80	Switch / Dimmer	Bed / Trolley 1.45m	See Guidance Notes	1
		Single Bed Isolation Cubicle	1	26.0	Isolation Bedroom	B1401-01	25	21	Adjacent Space Transfer Air	BMS Adjustable Sensor	Yes	Comfort Cooled Fresh Air	Supply via lobby	10	0	Balanced	F7	43	41		100	5	300	A	80	Switch / Dimmer	Bed / Trolley 1.45m	See Guidance Notes	1
		Gowning Lobby	1	6.0	Isolation Lobby	G0510	25	18	Warm Air - Reheat Battery	Local / BMS Adjustable Sensor	Yes	Comfort Cooled Fresh Air	Central Supply	69	0	Positive	F7	43	n/a		200	n/a	None	A	80	Presence detection	Floor 0m	See Guidance Notes	n/a
		Open Plan Bay (4 beds)	1	80.0	Multi-bed Wards	B1609-01	25	18	Radiant Panels	Remote Sensor Adj.	Yes	Comfort Cooled Fresh Air	Natural and Central Supply Air	4	via ensuite	positive to ensuite	G4	43	41		100	5	300	A	80	switch / dimmer	Bed / Trolley 1.45m	See Guidance Notes	n/a
		Patients' Assisted Bathroom	1	14.0	Bathroom	V1736	28	20	Adjacent Space Transfer Air	None	No	None	Central Dirty Extract	0	10	Negative	None	43	41		200	n/a	None	A	80	Presence detection	Floor 0m	See Guidance Notes	n/a
		Staff Base	1	6.0	Cellular / Ward Offices	M0251	25	18	Radiant Panels	Remote Sensor Adj.	Yes	Comfort Cooled Fresh Air	Central Supply and Extract	4	4	Balanced	G4	43	n/a		300	n/a	None	A	80	Switch	Desk 0.75 to 0.85m	See Guidance Notes	n/a
		Single Bed Cubicle	1	15.0	Bedroom	B1401	25	18	Radiant Panels	Remote Sensor Adj.	Yes	Comfort Cooled Fresh Air	Natural & Central Supply Air	4	via ensuite	Balanced	G4	43	41		100	5	300	A	80	Switch / Dimmer	Bed / Trolley 1.45m	See Guidance Notes	1
		En-suite wheelchair-accessible WC, Shower & wash	1	4.5	Bathroom	V1643	28	20	Adjacent Space Transfer Air	None	No	None	Central Dirty Extract	0	10	Negative	None	43	41		200	n/a	None	A	80	Presence detection	Floor 0m	See Guidance Notes	n/a
		Open Plan Bay (3 cots)	1	45.0	Multi-bed Wards	B1407-01	25	18	Radiant Panels	Remote Sensor Adj.	Yes	Comfort Cooled Fresh Air	Natural and Central Supply Air	4	via ensuite	positive to ensuite	G4	43	41		100	5	300	A	80	switch / dimmer	Bed / Trolley 1.45m	See Guidance Notes	n/a
		Staff Base	1	4.0	Cellular / Ward Offices	M0251	25	18	Radiant Panels	Remote Sensor Adj.	Yes	Comfort Cooled Fresh Air	Central Supply and Extract	4	4	Balanced	G4	43	n/a		300	n/a	None	A	80	Switch	Desk 0.75 to 0.85m	See Guidance Notes	n/a
		Single Cot Cubicle	1	26.0	Bedroom	B1421	25	18	Radiant Panels	Remote Sensor Adj.	Yes	Comfort Cooled Fresh Air	Natural & Central Supply Air	4	via ensuite	Balanced	G4	43	41		100	5	300	A	80	Switch / Dimmer	Bed / Trolley 1.45m	See Guidance Notes	1
		Single Bed Isolation Cubicle	1	26.0	Isolation Bedroom	B1401-01	25	21	Adjacent Space Transfer Air	BMS Adjustable Sensor	Yes	Comfort Cooled Fresh Air	Supply via lobby	10	0	Balanced	F7	43	41		100	5	300	A	80	Switch / Dimmer	Bed / Trolley 1.45m	See Guidance Notes	1
		Gowning Lobby	1	6.0	Isolation Lobby	G0510	25	18	Warm Air - Reheat Battery	Local / BMS Adjustable Sensor	Yes	Comfort Cooled Fresh Air	Central Supply	69	0	Positive	F7	43	n/a		200	n/a	None	A	80	Presence detection	Floor 0m	See Guidance Notes	n/a
		Open Plan Bay (4 beds)	1	104.0	Multi-bed Wards	B1609-02	25	18	Radiant Panels	Remote Sensor Adj.	Yes	Comfort Cooled Fresh Air	Natural and Central Supply Air	4	via ensuite	positive to ensuite	G4	43	41		100	5	300	A	80	switch / dimmer	Bed / Trolley 1.45m	See Guidance Notes	n/a
		Clean Utility	1	18.0	Clean Utility	T0101	28	18	Radiant Panels	Remote Sensor Adj.	Yes	Comfort Cooled Fresh Air	Central Supply Air	6	0	Positive	G4	43	41		150	n/a	None	A	80	Presence detection	General working plane 1m	See Guidance Notes	n/a
		Clean Utility	1	8.0	Clean Utility	T0101	28	18	Radiant Panels	Remote Sensor Adj.	Yes	Comfort Cooled Fresh Air	Central Supply Air	6	0	Positive	G4	43	41		150	n/a	None	A	80	Presence detection	General working plane 1m	See Guidance Notes	n/a
		Clean Utility	1	8.0	Clean Utility	T0101	28	18	Radiant Panels	Remote Sensor Adj.	Yes	Comfort Cooled Fresh Air	Central Supply Air	6	0	Positive	G4	43	41		150	n/a	None	A	80	Presence detection	General working plane 1m	See Guidance Notes	n/a
		Dirty Utility	1	19.0	Dirty utility	Y0431	28	18	Adjacent Space Transfer Air	None	No	None	Central Dirty Extract	0	6	Negative	None	43	41		200	n/a	None	A	80	Presence detection	Floor 0m	See Guidance Notes	n/a
		Dirty Utility	1	14.0	Dirty utility	Y0431	28	18	Adjacent Space Transfer Air	None	No	None	Central Dirty Extract	0	6	Negative	None	43	41		200	n/a	None	A	80	Presence detection	Floor 0m	See Guidance Notes	n/a
B1	PICU and HDU's - 24 Beds	Laboratory	1	10.0	Laboratory	L1804	25	18	Radiant Panels	Remote Sensor Adj.	Yes	Ceiling Cassette - Chilled Water	Central Supply and Extract	6	6	Balanced	F7	43	60		500	n/a	None	A	80	Switch	Desk 0.75 to 0.85m	See Guidance Notes	n/a
		Disposal Hold	1	10.0	Disposal Hold	Y0646	28	18	Adjacent Space Transfer Air	None	No	None	Central Dirty Extract	0	10	Negative	None	43	n/a		100	n/a	None	A	90	Presence detection	Floor 0m	See Guidance Notes	n/a
		DSR	1	7.0	DSR	Y1510	28	18	Adjacent Space Transfer Air	None	No	None	Central Dirty Extract	0	6	Negative	None	43	60		100	n/a	None	A	90	Presence detection	Floor 0m	See Guidance Notes	n/a
		Pantry / Milk Store	1	10.0	Pantry	P0627	28	18	Radiant Panels	Remote Sensor Adj.	Yes	Comfort Cooled Fresh Air	Central Supply and Extract	6	8	Negative	G4	43	41		300	n/a	None	A	80	Switch	Floor 0m	See Guidance Notes	n/a
		Baby Infant / Feeding Room	1	5.0	Baby Feeding	S0012	25	18	Radiant Panels	Remote Sensor Adj.	No	None	Central Supply Air	5	0	Positive	G4	43	41		100	n/a	None	A	80	Presence detection	Floor 0m	See Guidance Notes	n/a
		Play Specialist Base & Store	1	8.0	Storage Area Equipment	W1585-??	28	16	Radiant Panels	Remote Sensor Adj.	No	None	Central General Extract	0	3	Negative	None	43	n/a		200	n/a	None	A	80	Presence detection	Floor 0m	See Guidance Notes	n/a
		WC - Staff	3	3.0	Toilet	V1010-03	28	18	Adjacent Space Transfer Air	None	No	None	Central Dirty Extract	0	10	Negative	None	43	41		200	n/a	None	A	80	Presence detection	Floor 0m	See Guidance Notes	n/a
		Relatives' Sitting Room	1	18.5	Common room/staff room/lounge	D1120	28	18	Radiant Panels	Remote Sensor Adj.	Yes	Comfort Cooled Fresh Air	Central Supply and Extract	6	8	Negative	G4	43	41		300	n/a	None	A	80	Switch	Floor 0m	See Guidance Notes	n/a
		WC - Relatives	1	3.0	Toilet	V1010	28	18	Adjacent Space Transfer Air	None	No	None	Central Dirty Extract	0	10	Negative	None	43	41		200	n/a	None	A	80	Presence detection	Floor 0m	See Guidance Notes	n/a

RHSC / DCN Environmental Matrix

Dept	Dept	Room Name	Qty		Room Function	ADB Code	Temp (max)	Temp (min)	Heating Type	Heating Control	Cooling (present)	Cooling (type)	Ventilation (type)	Supply (ac/hr)	Extract (ac/hr)	Relative pressure	Min filtration	Surface temp	Water temp	Safety Notes	Normal lux	Night lux	Local lux	Standby grade	Colour render	Control	Plane	Medical Location	
		Relative Overnight Stay Room	2	10.0	Relatives Overnight Stay	D1311	28	20	Radiant Panels	Remote Sensor Adj.	Yes	Comfort Cooled Fresh Air	Central Supply and Extract	4	0	Positive	G4	43	41		100	n/a	None	A	80	Switch	Bed / Trolley 1.45m	See Guidance Notes	n/a
		En-suite wheelchair-accessible WC, Shower & wash	1	6.0	Bathroom	V1643	28	20	Adjacent Space Transfer Air	None	No	None	Central Dirty Extract	0	10	Negative	None	43	41		200	n/a	None	A	80	Presence detection	Floor 0m	See Guidance Notes	n/a
		En-suite wheelchair-accessible WC, Shower & wash	1	4.5	Bathroom	V1643	28	20	Adjacent Space Transfer Air	None	No	None	Central Dirty Extract	0	10	Negative	None	43	41		200	n/a	None	A	80	Presence detection	Floor 0m	See Guidance Notes	n/a
		Quiet / Interview Room	1	9.0	Meeting Room	M0724	25	18	Radiant Panels	Remote Sensor Adj.	Yes	Ceiling Cassette - Chilled Water	Central Supply and Extract	10 l/s per person	10 l/s per person	Balanced	G4	43	n/a		300	n/a	None	A	80	Switch	Desk 0.75 to 0.85m	See Guidance Notes	n/a
		Family Interview Room	1	12.0	Meeting Room	M0724	25	18	Radiant Panels	Remote Sensor Adj.	Yes	Ceiling Cassette - Chilled Water	Central Supply and Extract	10 l/s per person	10 l/s per person	Balanced	G4	43	n/a		300	n/a	None	A	80	Switch	Desk 0.75 to 0.85m	See Guidance Notes	n/a
		Bulk Supplies Store	1	55.0	Storage Area Equipment	W1585-??	28	16	Radiant Panels	Remote Sensor Adj.	No	None	Central General Extract	0	3	Negative	None	43	n/a		200	n/a	None	A	80	Presence detection	Floor 0m	See Guidance Notes	n/a
		Store - Equipment	1	40.0	Storage Area Equipment	W1585	28	16	Radiant Panels	Remote Sensor Adj.	No	None	Central General Extract	0	3	Negative	None	43	n/a		200	n/a	None	A	80	Presence detection	Floor 0m	See Guidance Notes	n/a
		Bed/Patient Chair / Buggy Storage	1	8.0	Storage Area Equipment	W1585-??	28	16	Radiant Panels	Remote Sensor Adj.	No	None	Central General Extract	0	3	Negative	None	43	n/a		200	n/a	None	A	80	Presence detection	Floor 0m	See Guidance Notes	n/a
		Retrieval Equipment Store	1	15.0	Storage Area Equipment	W1585-??	28	16	Radiant Panels	Remote Sensor Adj.	No	None	Central General Extract	0	3	Negative	None	43	n/a		200	n/a	None	A	80	Presence detection	Floor 0m	See Guidance Notes	n/a
		Equipment Service Room	1	24.0	Small Workshop	L1804	28	18	Radiant Panels	Remote Sensor Adj.	Yes	Comfort Cooled Fresh Air	Central Supply and Extract	4	6	Negative	G4	43	41		300	n/a	None	A	80	Switch	Desk 0.75 to 0.85m	See Guidance Notes	n/a
		Linen Bay (1 Trolley)	2	1.5	Linen Bay	W1594-01	28	16	Adjacent Space Transfer Air	None	No	None	Central Extract	0	3	Negative	None	43	n/a		200	n/a	None	A	80	Presence detection	Floor 0m	See Guidance Notes	n/a
		Gas Cylinder Store	2	2.0	Storage Area Med Gas	W1585-??	28	16	Frost protection	Room Thermostat	No	None	Natural ventilation	0	0	n/a	None	n/a	n/a		200	n/a	None	A	80	Presence detection	Floor 0m	See Guidance Notes	n/a
		Cardiac Echo/ECG Bay	1	4.0	Circulation Equipment Storage Bays	G0180-06	28	16	Adjacent Space Transfer Air	None	No	None	Central General Extract	0	3	Negative	None	43	n/a		200	n/a	None	A	80	Presence detection	Floor 0m	See Guidance Notes	n/a
		Mobile X-Ray / Ultrasound Bay	1	4.0	Circulation Equipment Storage Bays	G0180-06	28	16	Adjacent Space Transfer Air	None	No	None	Central General Extract	0	3	Negative	None	43	n/a		200	n/a	None	A	80	Presence detection	Floor 0m	See Guidance Notes	n/a
		X-Ray Processing	1	8.0	Diagnostic room	L1804	25	18	Warm Air - Reheat Battery	BMS Adjustable Sensor	Yes	Comfort Cooled	Central Supply and Extract	to suit location	to suit location	Balanced	F7	43	41		300	n/a	1000	A	80	Switch / Dimmer	General working plane 1m	See Guidance Notes	1
		Hoist Bay	1	3.0	Circulation Equipment Storage Bays	G0180-03	28	16	Adjacent Space Transfer Air	None	No	None	Central General Extract	0	3	Negative	None	43	n/a		200	n/a	None	A	80	Presence detection	Floor 0m	See Guidance Notes	n/a
		Resuscitation Trolley Bay	4	1.0	Circulation Equipment Storage Bays	G0180-01	28	16	Adjacent Space Transfer Air	None	No	None	Central General Extract	0	3	Negative	None	43	n/a		200	n/a	None	A	80	Presence detection	Floor 0m	See Guidance Notes	n/a
		On call consultant	1	10.0	Cellular / Ward Offices	M0251	25	18	Radiant Panels	Remote Sensor Adj.	Yes	Comfort Cooled Fresh Air	Central Supply and Extract	4	4	Balanced	G4	43	n/a		300	n/a	None	A	80	Switch	Desk 0.75 to 0.85m	See Guidance Notes	n/a
		Retrieval Team	1	12.0	Cellular / Ward Offices	M0251	25	18	Radiant Panels	Remote Sensor Adj.	Yes	Comfort Cooled Fresh Air	Central Supply and Extract	4	4	Balanced	G4	43	n/a		300	n/a	None	A	80	Switch	Desk 0.75 to 0.85m	See Guidance Notes	n/a
		Senior Nursing Office	1	10.0	Cellular / Ward Offices	M0251	25	18	Radiant Panels	Remote Sensor Adj.	Yes	Comfort Cooled Fresh Air	Central Supply and Extract	4	4	Balanced	G4	43	n/a		300	n/a	None	A	80	Switch	Desk 0.75 to 0.85m	See Guidance Notes	n/a
		Multidisciplinary Work Area PICU	1	15.0	Multi Disciplinary Work Areas	M0254	25	18	Radiant Panels	Remote Sensor Adj.	Yes	Comfort Cooled Fresh Air	Central Supply and Extract	4	4	Balanced	G4	43	n/a		300	n/a	1000	A	80	Switch	Desk 0.75 to 0.85m	See Guidance Notes	n/a
		Multidisciplinary Work Area HDU	1	15.0	Multi Disciplinary Work Areas	M0254	25	18	Radiant Panels	Remote Sensor Adj.	Yes	Comfort Cooled Fresh Air	Central Supply and Extract	4	4	Balanced	G4	43	n/a		300	n/a	1000	A	80	Switch	Desk 0.75 to 0.85m	See Guidance Notes	n/a
		Seminar Room	1	37.5	Meeting Room	H1313-03	25	18	Radiant Panels	Remote Sensor Adj.	Yes	Ceiling Cassette - Chilled Water	Central Supply and Extract	10 l/s per person	10 l/s per person	Balanced	G4	43	n/a		300	n/a	None	A	80	Switch	Desk 0.75 to 0.85m	See Guidance Notes	n/a
		IPS Room	1	2.0	IPS Room	Engineering	Manufacturer Dependant	Manufacturer Dependant	None	None	No	None	Central General Extract	0	3	Negative	None	43	n/a	0	n/a	n/a	None	A	80	Presence detection	Floor 0m	See Guidance Notes	n/a
		IPS Room	1	3.0	IPS Room	Engineering	Manufacturer Dependant	Manufacturer Dependant	None	None	No	None	Central General Extract	0	3	Negative	None	43	n/a	0	n/a	n/a	None	A	80	Presence detection	Floor 0m	See Guidance Notes	n/a
		Staff Room	1	32.0	Common room/staff room/lounge	D0608-03	28	18	Radiant Panels	Remote Sensor Adj.	Yes	Comfort Cooled Fresh Air	Central Supply and Extract	6	8	Negative	G4	43	41		300	n/a	None	A	80	Switch	Floor 0m	See Guidance Notes	n/a
		Reception / Staff Base	1	3.0	Reception	J0132-01	28	18	Radiant Panels	Remote Sensor Adj.	Yes	Comfort Cooled Fresh Air	Central Supply Air	4	4	Balanced	G4	43	n/a		300	n/a	None	A	80	Switch	Desk 0.75 to 0.85m	See Guidance Notes	n/a
		Single Bedroom	5	17.0	Bedroom	B0305-01	25	18	Radiant Panels	Remote Sensor Adj.	Yes	Comfort Cooled Fresh Air	Natural & Central Supply Air	4	via ensuite	Balanced	G4	43	41		100	5	300	A	80	Switch / Dimmer	Bed / Trolley 1.45m	See Guidance Notes	1
		Single Isolation Bedroom	3	17.0	Isolation Bedroom	B0308	25	21	Adjacent Space Transfer Air	BMS Adjustable Sensor	Yes	Comfort Cooled Fresh Air	Supply via lobby	10	0	Balanced	F7	43	41		100	5	300	A	80	Switch / Dimmer	Bed / Trolley 1.45m	See Guidance Notes	1
		Isolation Bedroom Entrance Lobby	3	4.0	Isolation Lobby	G0510	25	18	Warm Air - Reheat Battery	Local / BMS Adjustable Sensor	Yes	Comfort Cooled Fresh Air	Central Supply	69	0	Positive	F7	43	n/a		200	n/a	None	A	80	Presence detection	Floor 0m	See Guidance Notes	n/a
		En-suite wheelchair-accessible WC, Shower & wash	8	4.5	Bathroom	V1643	28	20	Adjacent Space Transfer Air	None	No	None	Central Dirty Extract	0	10	Negative	None	43	41		200	n/a	None	A	80	Presence detection	Floor 0m	See Guidance Notes	n/a
		4 Bed Room	2	58.5	Multi-bed Wards	B0405	25	18	Radiant Panels	Remote Sensor Adj.	Yes	Comfort Cooled Fresh Air	Natural and Central Supply Air	4	via ensuite	positive to ensuite	G4	43	41		100	5	300	A	80	switch / dimmer	Bed / Trolley 1.45m	See Guidance Notes	n/a
		WC	2	4.5	Toilet	V1010	28	18	Adjacent Space Transfer Air	None	No	None	Central Dirty Extract	0	10	Negative	None	43	41		200	n/a	None	A	80	Presence detection	Floor 0m	See Guidance Notes	n/a
		En-suite wheelchair-accessible WC, Shower & wash	2	6.0	Bathroom	V1643	28	20	Adjacent Space Transfer Air	None	No	None	Central Dirty Extract	0	10	Negative	None	43	41		200	n/a	None	A	80	Presence detection	Floor 0m	See Guidance Notes	n/a
		Single Bedroom (RHSC)	3	19.0	Bedroom	B0305-01	25	18	Radiant Panels	Remote Sensor Adj.	Yes	Comfort Cooled Fresh Air	Natural & Central Supply Air	4	via ensuite	Balanced	G4	43	41		100	5	300	A	80	Switch / Dimmer	Bed / Trolley 1.45m	See Guidance Notes	1
		Single Isolation Bedroom (RHSC)	1	19.0	Isolation Bedroom	B0308	25	21	Adjacent Space Transfer Air	BMS Adjustable Sensor	Yes	Comfort Cooled Fresh Air	Supply via lobby	10	0	Balanced	F7	43	41		100	5	300	A	80	Switch / Dimmer	Bed / Trolley 1.45m	See Guidance Notes	1
		Isolation Bedroom Entrance Lobby	1	4.0	Isolation Lobby	G0510	25	18	Warm Air - Reheat Battery	Local / BMS Adjustable Sensor	Yes	Comfort Cooled Fresh Air	Central Supply	69	0	Positive	F7	43	n/a		200	n/a	None	A	80	Presence detection	Floor 0m	See Guidance Notes	n/a
		En-suite trolley shower	4	8.5	Bathroom	V1643	28	20	Adjacent Space Transfer Air	None	No	None	Central Dirty Extract	0	10	Negative	None	43	41		200	n/a	None	A	80	Presence detection	Floor 0m	See Guidance Notes	n/a
		Sitting Room / Lounge	1	16.0	Common room/staff room/lounge	D1120	28	18	Radiant Panels	Remote Sensor Adj.	Yes	Comfort Cooled Fresh Air	Central Supply and Extract	6	8	Negative	G4	43	41		300	n/a	None	A	80	Switch	Floor 0m	See Guidance Notes	n/a
		Single Bedroom	3	17.0	Bedroom	B0305-01	25	18	Radiant Panels	Remote Sensor Adj.	Yes	Comfort Cooled Fresh Air	Natural & Central Supply Air	4	via ensuite	Balanced	G4	43	41		100	5	300	A	80	Switch / Dimmer	Bed / Trolley 1.45m	See Guidance Notes	1
		En-suite wheelchair-accessible WC, Shower & wash	3	4.5	Bathroom	V1643	28	20	Adjacent Space Transfer Air	None	No	None	Central Dirty Extract	0	10	Negative	None	43	41		200	n/a	None	A	80	Presence detection	Floor 0m	See Guidance Notes	n/a
		Patients' Assisted Bathroom	1	14.0	Bathroom	V1736	28	20	Adjacent Space Transfer Air	None	No	None	Central Dirty Extract	0	10	Negative	None	43	41		200	n/a	None	A	80	Presence detection	Floor 0m	See Guidance Notes	n/a
		Treatment Room	1	16.0	Treatment Room	X0105	28	18	Radiant Panels	Remote Sensor Adj.	Yes	Comfort Cooled Fresh Air	Central Supply Air	10	0	Positive	F7	43	41		500	n/a	1000	A	90	Switch	Bed / Trolley 1.45m	See Guidance Notes	n/a
C1.1	Medical Inpatients - 23 Beds	Clean Utility	1	12.0	Clean Utility	T0101	28	18	Radiant Panels	Remote Sensor Adj.	Yes	Comfort Cooled Fresh Air	Central Supply Air	6	0	Positive	G4	43	41		150	n/a	None	A	80	Presence detection	General working plane 1m	See Guidance Notes	n/a
		Resuscitation Trolley Bay	1	1.0	Resus Trolley bay	G0180-01	28	18	Adjacent Space Transfer Air	None	No	None	None	0	0	n/a	None	43	n/a		500	n/a	None	A	90	Switch	Bed / Trolley 1.45m	See Guidance Notes	n/a
		Dirty Utility	1	14.0	Dirty utility	Y0431	28	18	Adjacent Space Transfer Air	None	No	None	Central Dirty Extract	0	6	Negative	None	43	41		200	n/a	None	A	80	Presence detection	Floor 0m	See Guidance Notes	n/a
		Touchdown Base	2	10.0	staff base	T0151	28	18	Radiant Panels	Remote Sensor Adj.	No	None	Central Supply and Extract	10l/s/per person	10l/s/per person	Balanced	G4	n/a	n/a		200/300	n/a	None	A	80	Switch / Dimmer	Desk 0.75 to 0.85m	See Guidance Notes	n/a
		Ward Management Office	1	9.0	Cellular / Ward Offices	M0251	25	18	Radiant Panels	Remote Sensor Adj.	Yes	Comfort Cooled Fresh Air	Central Supply and Extract	4	4	Balanced	G4	43	n/a		300	n/a	None	A	80	Switch	Desk 0.75 to 0.85m	See Guidance Notes	n/a
		Multi-disciplinary Office	1	18.0	Multi Disciplinary Work Areas	M0254	25	18	Radiant Panels	Remote Sensor Adj.	Yes	Comfort Cooled Fresh Air	Central Supply and Extract	4	4	Balanced	G4	43	n/a		300	n/a	None	A	80	Switch	Desk 0.75 to 0.85m	See Guidance Notes	n/a
		Patient Interview Room	1	9.0	Meeting Room	M0724	25	18	Radiant Panels	Remote Sensor Adj.	Yes	Ceiling Cassette - Chilled Water	Central Supply and Extract	10 l/s per person	10 l/s per person	Balanced	G4	43	n/a		300	n/a	None	A	80	Switch	Desk 0.75 to 0.85m	See Guidance Notes	n/a
		WC - Staff	2	3.0	Toilet	V1010-03	28	18	Adjacent Space Transfer Air	None	No	None	Central Dirty Extract	0	10	Negative	None	43	41		200	n/a	None	A	80	Presence detection	Floor 0m	See Guidance Notes	n/a
		WC - Visitors	1	3.0	Toilet	V1010-02	28	18	Adjacent Space Transfer Air	None	No	None	Central Dirty Extract	0	10	Negative	None	43	41		200	n/a	None	A	80	Presence detection	Floor 0m	See Guidance Notes	n/a
		Dining / Play Room	1	20.0	Eating/Drinking	D0608-01	28	18	Radiant Panels	Remote Sensor Adj.	Yes	Comfort Cooled Fresh Air	Central Supply and Extract	10 l/s per person	10 l/s per person	Balanced	G4	43	41		300	n/a	None	A	80	Switch	Floor 0m	See Guidance Notes	n/a
		Pantry	1	8.0	Pantry	P0627	28	18	Radiant Panels	Remote Sensor Adj.	Yes	Comfort Cooled Fresh Air	Central Supply and Extract	6	8	Negative	G4	43	41		300	n/a	None	A	80	Switch	Floor 0m	See Guidance Notes	n/a
		Linen Bay (1 Trolley)	1	3.0	Linen Bay	W1594-01	28	16	Adjacent Space Transfer Air	None	No	None	Central Extract	0	3	Negative	None	43	n/a		200	n/a	None	A	80	Presence detection	Floor 0m	See Guidance Notes	n/a
		Store - back up clothing	1	4.0	Storage Area Equipment	W1585-??	28	16	Radiant Panels	Remote Sensor Adj.	No	None	Central General Extract	0	3	Negative	None	43	n/a		200	n/a	None	A	80	Presence detection	Floor 0m	See Guidance Notes	n/a
		Store - General	1	18.0	Storage Area Equipment	W1585	28	16	Radiant Panels	Remote Sensor Adj.	No	None	Central General Extract	0	3	Negative	None	43	n/a		200	n/a	None	A	80	Presence detection	Floor 0m	See Guidance Notes	n/a

RHSC / DCN Environmental Matrix

Dept	Dept	Room Name	Qty		Room Function	ADB Code	Temp (max)	Temp (min)	Heating Type	Heating Control	Cooling (present)	Cooling (type)	Ventilation (type)	Supply (ac/hr)	Extract (ac/hr)	Relative pressure	Min filtration	Surface temp	Water temp	Safety Notes	Normal lux	Night lux	Local lux	Standby grade	Colour render	Control	Plane	Medical Location	
		Store - Equipment	1	10.0	Storage Area Equipment	W1585	28	16	Radiant Panels	Remote Sensor Adj.	No	None	Central General Extract	0	3	Negative	None	43	n/a		200	n/a	None	A	80	Presence detection	Floor 0m	See Guidance Notes	n/a
		Hoist Bay	1	3.0	Circulation Equipment Storage Bays	G0180-03	28	16	Adjacent Space Transfer Air	None	No	None	Central General Extract	0	3	Negative	None	43	n/a		200	n/a	None	A	80	Presence detection	Floor 0m	See Guidance Notes	n/a
		Disposal Hold	1	10.0	Disposal Hold	Y0646	28	18	Adjacent Space Transfer Air	None	No	None	Central Dirty Extract	0	10	Negative	None	43	n/a		100	n/a	None	A	90	Presence detection	Floor 0m	See Guidance Notes	n/a
		Ward kitchen	1	12.0	Ward Kitchen	P0627-01	28	18	Adjacent Space Transfer Air	None	Yes	Ceiling Cassette - Chilled Water	Central General Extract	0	6	Negative	G4	n/a	60		500	n/a	None	A	80	Switch	General working plane 1m	See Guidance Notes	n/a
		Mobile X-Ray/Ultrasound Bay	1	4.0	Circulation Equipment Storage Bays	G0180-06	28	16	Adjacent Space Transfer Air	None	No	None	Central General Extract	0	3	Negative	None	43	n/a		200	n/a	None	A	80	Presence detection	Floor 0m	See Guidance Notes	n/a
		IPS Room	1	1.8	IPS Room	Engineering	Manufacturer Dependant	Manufacturer Dependant	None	None	No	None	Central General Extract	0	3	Negative	None	43	n/a	0	n/a	n/a	None	A	80	Presence detection	Floor 0m	See Guidance Notes	n/a
		DSR	1	7.0	DSR	Y1510	28	18	Adjacent Space Transfer Air	None	No	None	Central Dirty Extract	0	6	Negative	None	43	60		100	n/a	None	A	90	Presence detection	Floor 0m	See Guidance Notes	n/a
C1.2	Surgical Long Stay Inpatients 15 Beds	Reception / Staff Base	1	3.0	Reception	J0132-01	28	18	Radiant Panels	Remote Sensor Adj.	Yes	Comfort Cooled Fresh Air	Central Supply Air	4	4	Balanced	G4	43	n/a		300	n/a	None	A	80	Switch	Desk 0.75 to 0.85m	See Guidance Notes	n/a
		Single Bedroom	2	17.0	Bedroom	B0305-01	25	18	Radiant Panels	Remote Sensor Adj.	Yes	Comfort Cooled Fresh Air	Natural & Central Supply Air	4	via ensuite	Balanced	G4	43	41		100	5	300	A	80	Switch / Dimmer	Bed / Trolley 1.45m	See Guidance Notes	1
		En-suite wheelchair-accessible WC, Shower & wash	2	4.5	Bathroom	V1643	28	20	Adjacent Space Transfer Air	None	No	None	Central Dirty Extract	0	10	Negative	None	43	41		200	n/a	None	A	80	Presence detection	Floor 0m	See Guidance Notes	n/a
		4 Bed Room	2	58.5	Multi-bed Wards	B0405	25	18	Radiant Panels	Remote Sensor Adj.	Yes	Comfort Cooled Fresh Air	Natural and Central Supply Air	4	via ensuite	positive to ensuite	G4	43	41		100	5	300	A	80	switch / dimmer	Bed / Trolley 1.45m	See Guidance Notes	n/a
		WC	2	4.5	Toilet	V1010	28	18	Adjacent Space Transfer Air	None	No	None	Central Dirty Extract	0	10	Negative	None	43	41		200	n/a	None	A	80	Presence detection	Floor 0m	See Guidance Notes	n/a
		Wetroom	1	14.0	Bathroom	V1736	28	20	Adjacent Space Transfer Air	None	No	None	Central Dirty Extract	0	10	Negative	None	43	41		200	n/a	None	A	80	Presence detection	Floor 0m	See Guidance Notes	n/a
		Single Bedroom (RHSC)	5	17.0	Bedroom	B0305-01	25	18	Radiant Panels	Remote Sensor Adj.	Yes	Comfort Cooled Fresh Air	Natural & Central Supply Air	4	via ensuite	Balanced	G4	43	41		100	5	300	A	80	Switch / Dimmer	Bed / Trolley 1.45m	See Guidance Notes	1
		En-suite wheelchair-accessible WC, Shower & wash	5	4.5	Bathroom	V1643	28	20	Adjacent Space Transfer Air	None	No	None	Central Dirty Extract	0	10	Negative	None	43	41		200	n/a	None	A	80	Presence detection	Floor 0m	See Guidance Notes	n/a
		Discharge Lounge	1	20.0	Common room/staff room/lounge	D1135	28	18	Radiant Panels	Remote Sensor Adj.	Yes	Comfort Cooled Fresh Air	Central Supply and Extract	6	8	Negative	G4	43	41		300	n/a	None	A	80	Switch	Floor 0m	See Guidance Notes	n/a
		Patients' Assisted Bathroom	1	14.0	Bathroom	V1736	28	20	Adjacent Space Transfer Air	None	No	None	Central Dirty Extract	0	10	Negative	None	43	41		200	n/a	None	A	80	Presence detection	Floor 0m	See Guidance Notes	n/a
		Treatment Room	1	16.0	Treatment Room	X0105	28	18	Radiant Panels	Remote Sensor Adj.	Yes	Comfort Cooled Fresh Air	Central Supply Air	10	0	Positive	F7	43	41		500	n/a	1000	A	90	Switch	Bed / Trolley 1.45m	See Guidance Notes	n/a
		Clean Utility	1	12.0	Clean Utility	T0101	28	18	Radiant Panels	Remote Sensor Adj.	Yes	Comfort Cooled Fresh Air	Central Supply Air	6	0	Positive	G4	43	41		150	n/a	None	A	80	Presence detection	General working plane 1m	See Guidance Notes	n/a
		Resuscitation Trolley Bay	1	1.0	Resus Trolley bay	G0180-01	28	18	Adjacent Space Transfer Air	None	No	None	None	0	0	n/a	None	43	n/a		500	n/a	None	A	90	Switch	Bed / Trolley 1.45m	See Guidance Notes	n/a
		Dirty Utility	1	14.0	Dirty utility	Y0431	28	18	Adjacent Space Transfer Air	None	No	None	Central Dirty Extract	0	6	Negative	None	43	41		200	n/a	None	A	80	Presence detection	Floor 0m	See Guidance Notes	n/a
		Touchdown Base	1	3.0	staff base	T0151	28	18	Radiant Panels	Remote Sensor Adj.	No	None	Central Supply and Extract	10l/s/per person	10l/s/per person	Balanced	G4	n/a	n/a		200/300	n/a	None	A	80	Switch / Dimmer	Desk 0.75 to 0.85m	See Guidance Notes	n/a
		Ward Management Office	1	10.0	Cellular / Ward Offices	M0251	25	18	Radiant Panels	Remote Sensor Adj.	Yes	Comfort Cooled Fresh Air	Central Supply and Extract	4	4	Balanced	G4	43	n/a		300	n/a	None	A	80	Switch	Desk 0.75 to 0.85m	See Guidance Notes	n/a
		Multi-Disciplinary Office	1	18.0	Multi Disciplinary Work Areas	M0254	25	18	Radiant Panels	Remote Sensor Adj.	Yes	Comfort Cooled Fresh Air	Central Supply and Extract	4	4	Balanced	G4	43	n/a		300	n/a	None	A	80	Switch	Desk 0.75 to 0.85m	See Guidance Notes	n/a
		Patient Interview Room	1	9.0	Meeting Room	M0724	25	18	Radiant Panels	Remote Sensor Adj.	Yes	Ceiling Cassette - Chilled Water	Central Supply and Extract	10 l/s per person	10 l/s per person	Balanced	G4	43	n/a		300	n/a	None	A	80	Switch	Desk 0.75 to 0.85m	See Guidance Notes	n/a
		WC - Staff	2	3.0	Toilet	V1010-03	28	18	Adjacent Space Transfer Air	None	No	None	Central Dirty Extract	0	10	Negative	None	43	41		200	n/a	None	A	80	Presence detection	Floor 0m	See Guidance Notes	n/a
		WC - Visitors	1	3.0	Toilet	V1010-02	28	18	Adjacent Space Transfer Air	None	No	None	Central Dirty Extract	0	10	Negative	None	43	41		200	n/a	None	A	80	Presence detection	Floor 0m	See Guidance Notes	n/a
		Dining / Play Room	1	13.0	Eating/Drinking	D0608-01	28	18	Radiant Panels	Remote Sensor Adj.	Yes	Comfort Cooled Fresh Air	Central Supply and Extract	10 l/s per person	10 l/s per person	Balanced	G4	43	41		300	n/a	None	A	80	Switch	Floor 0m	See Guidance Notes	n/a
		Pantry	1	8.0	Pantry	P0627	28	18	Radiant Panels	Remote Sensor Adj.	Yes	Comfort Cooled Fresh Air	Central Supply and Extract	6	8	Negative	G4	43	41		300	n/a	None	A	80	Switch	Floor 0m	See Guidance Notes	n/a
		Linen Bay (1 Trolley)	1	1.5	Linen Bay	W1594-01	28	16	Adjacent Space Transfer Air	None	No	None	Central Extract	0	3	Negative	None	43	n/a		200	n/a	None	A	80	Presence detection	Floor 0m	See Guidance Notes	n/a
		Store - back up clothing	1	4.0	Storage Area Equipment	W1585-??	28	16	Radiant Panels	Remote Sensor Adj.	No	None	Central General Extract	0	3	Negative	None	43	n/a		200	n/a	None	A	80	Presence detection	Floor 0m	See Guidance Notes	n/a
		Store - General	1	12.0	Storage Area Equipment	W1585	28	16	Radiant Panels	Remote Sensor Adj.	No	None	Central General Extract	0	3	Negative	None	43	n/a		200	n/a	None	A	80	Presence detection	Floor 0m	See Guidance Notes	n/a
		Store - Equipment	1	10.0	Storage Area Equipment	W1585	28	16	Radiant Panels	Remote Sensor Adj.	No	None	Central General Extract	0	3	Negative	None	43	n/a		200	n/a	None	A	80	Presence detection	Floor 0m	See Guidance Notes	n/a
		Hoist Bay	1	3.0	Circulation Equipment Storage Bays	G0180-03	28	16	Adjacent Space Transfer Air	None	No	None	Central General Extract	0	3	Negative	None	43	n/a		200	n/a	None	A	80	Presence detection	Floor 0m	See Guidance Notes	n/a
		Disposal Hold	1	10.0	Disposal Hold	Y0646	28	18	Adjacent Space Transfer Air	None	No	None	Central Dirty Extract	0	10	Negative	None	43	n/a		100	n/a	None	A	90	Presence detection	Floor 0m	See Guidance Notes	n/a
		Ward kitchen	1	12.0	Ward Kitchen	P0627-01	28	18	Adjacent Space Transfer Air	None	Yes	Ceiling Cassette - Chilled Water	Central General Extract	0	6	Negative	G4	n/a	60		500	n/a	None	A	80	Switch	General working plane 1m	See Guidance Notes	n/a
		DSR	1	7.0	DSR	Y1510	28	18	Adjacent Space Transfer Air	None	No	None	Central Dirty Extract	0	6	Negative	None	43	60		100	n/a	None	A	90	Presence detection	Floor 0m	See Guidance Notes	n/a
C1.3	Neuroscience Inpatients - 12 Beds	Reception / Staff Base	1	3.0	Reception	J0132-01	28	18	Radiant Panels	Remote Sensor Adj.	Yes	Comfort Cooled Fresh Air	Central Supply Air	4	4	Balanced	G4	43	n/a		300	n/a	None	A	80	Switch	Desk 0.75 to 0.85m	See Guidance Notes	n/a
		Waiting Area	1	10.0	Waiting Room	J0132-02	28	18	Radiant Panels	Remote Sensor Adj.	Yes	Comfort Cooled Fresh Air	Central Supply and Extract	5	5	Balanced	G4	43	n/a		300	n/a	None	A	80	Switch	Floor 0m	See Guidance Notes	n/a
		Single Bedroom (RHSC)	3	17.0	Bedroom	B0305-01	25	18	Radiant Panels	Remote Sensor Adj.	Yes	Comfort Cooled Fresh Air	Natural & Central Supply Air	4	via ensuite	Balanced	G4	43	41		100	5	300	A	80	Switch / Dimmer	Bed / Trolley 1.45m	See Guidance Notes	1
		Single Isolation Bedroom (RHSC)	1	17.0	Isolation Bedroom	B0308	25	21	Adjacent Space Transfer Air	BMS Adjustable Sensor	Yes	Comfort Cooled Fresh Air	Supply via lobby	10	0	Balanced	F7	43	41		100	5	300	A	80	Switch / Dimmer	Bed / Trolley 1.45m	See Guidance Notes	1
		Isolation Bedroom Entrance Lobby	1	4.0	Isolation Lobby	G0510	25	18	Warm Air - Reheat Battery	Local / BMS Adjustable Sensor	Yes	Comfort Cooled Fresh Air	Central Supply	69	0	Positive	F7	43	n/a		200	n/a	None	A	80	Presence detection	Floor 0m	See Guidance Notes	n/a
		En-suite wheelchair-accessible WC, Shower & wash	4	4.5	Bathroom	V1643	28	20	Adjacent Space Transfer Air	None	No	None	Central Dirty Extract	0	10	Negative	None	43	41		200	n/a	None	A	80	Presence detection	Floor 0m	See Guidance Notes	n/a
		4 Bed Room	2	58.5	Multi-bed Wards	B0405	25	18	Radiant Panels	Remote Sensor Adj.	Yes	Comfort Cooled Fresh Air	Natural and Central Supply Air	4	via ensuite	positive to ensuite	G4	43	41		100	5	300	A	80	switch / dimmer	Bed / Trolley 1.45m	See Guidance Notes	n/a
		Wetroom	1	14.0	Bathroom	V1736	28	20	Adjacent Space Transfer Air	None	No	None	Central Dirty Extract	0	10	Negative	None	43	41		200	n/a	None	A	80	Presence detection	Floor 0m	See Guidance Notes	n/a
		Patients' Assisted Bathroom	1	14.0	Bathroom	V1736	28	20	Adjacent Space Transfer Air	None	No	None	Central Dirty Extract	0	10	Negative	None	43	41		200	n/a	None	A	80	Presence detection	Floor 0m	See Guidance Notes	n/a
		Treatment Room	1	16.0	Treatment Room	X0105	28	18	Radiant Panels	Remote Sensor Adj.	Yes	Comfort Cooled Fresh Air	Central Supply Air	10	0	Positive	F7	43	41		500	n/a	1000	A	90	Switch	Bed / Trolley 1.45m	See Guidance Notes	n/a
		Clean Utility	1	12.0	Clean Utility	T0101	28	18	Radiant Panels	Remote Sensor Adj.	Yes	Comfort Cooled Fresh Air	Central Supply Air	6	0	Positive	G4	43	41		150	n/a	None	A	80	Presence detection	General working plane 1m	See Guidance Notes	n/a
		Resuscitation Trolley Bay	1	1.0	Resus Trolley bay	G0180-01	28	18	Adjacent Space Transfer Air	None	No	None	None	0	0	n/a	None	43	n/a		500	n/a	None	A	90	Switch	Bed / Trolley 1.45m	See Guidance Notes	n/a
		Dirty Utility	1	14.0	Dirty utility	Y0431	28	18	Adjacent Space Transfer Air	None	No	None	Central Dirty Extract	0	6	Negative	None	43	41		200	n/a	None	A	80	Presence detection	Floor 0m	See Guidance Notes	n/a
		Touchdown Base	2	2.0	staff base	T0151	28	18	Radiant Panels	Remote Sensor Adj.	No	None	Central Supply and Extract	10l/s/per person	10l/s/per person	Balanced	G4	n/a	n/a		200/300	n/a	None	A	80	Switch / Dimmer	Desk 0.75 to 0.85m	See Guidance Notes	n/a
		Patient Interview Room	1	9.0	Meeting Room	M0724	25	18	Radiant Panels	Remote Sensor Adj.	Yes	Ceiling Cassette - Chilled Water	Central Supply and Extract	10 l/s per person	10 l/s per person	Balanced	G4	43	n/a		300	n/a	None	A	80	Switch	Desk 0.75 to 0.85m	See Guidance Notes	n/a
		Ward Management Office	2	9.0	Cellular / Ward Offices	M0251	25	18	Radiant Panels	Remote Sensor Adj.	Yes	Comfort Cooled Fresh Air	Central Supply and Extract	4	4	Balanced	G4	43	n/a		300	n/a	None	A	80	Switch	Desk 0.75 to 0.85m	See Guidance Notes	n/a
		Multi-Disciplinary Office	2	18.0	Multi Disciplinary Work Areas	M0254	25	18	Radiant Panels	Remote Sensor Adj.	Yes	Comfort Cooled Fresh Air	Central Supply and Extract	4	4	Balanced	G4	43	n/a		300	n/a	None	A	80	Switch	Desk 0.75 to 0.85m	See Guidance Notes	n/a
		WC - Staff	2	3.0	Toilet	V1010	28	18	Adjacent Space Transfer Air	None	No	None	Central Dirty Extract	0	10	Negative	None	43	41		200	n/a	None	A	80	Presence detection	Floor 0m	See Guidance Notes	n/a
		WC - Visitors	1	3.0	Toilet	V1010	28	18	Adjacent Space Transfer Air	None	No	None	Central Dirty Extract	0	10	Negative	None	43	41		200	n/a	None	A	80	Presence detection	Floor 0m	See Guidance Notes	n/a
		Dining / Play Room	1	16.0	Eating/Drinking	D0608-01	28	18	Radiant Panels	Remote Sensor Adj.	Yes	Comfort Cooled Fresh Air	Central Supply and Extract	10 l/s per person	10 l/s per person	Balanced	G4	43	41		300	n/a	None	A	80	Switch	Floor 0m	See Guidance Notes	n/a
		Pantry	1	8.0	Pantry	P0627	28	18	Radiant Panels	Remote Sensor Adj.	Yes	Comfort Cooled Fresh Air	Central Supply and Extract	6	8	Negative	G4	43	41		300	n/a	None	A	80	Switch	Floor 0m	See Guidance Notes	n/a
		Linen Bay	1	1.5	Linen Bay	W1594-01	28	16	Adjacent Space Transfer Air	None	No	None	Central Extract	0	3	Negative	None	43	n/a		200	n/a	None	A	80	Presence detection	Floor 0m	See Guidance Notes	n/a

RHSC / DCN Environmental Matrix

Dept	Dept	Room Name	Qty		Room Function	ADB Code	Temp (max)	Temp (min)	Heating Type	Heating Control	Cooling (present)	Cooling (type)	Ventilation (type)	Supply (ac/hr)	Extract (ac/hr)	Relative pressure	Min filtration	Surface temp	Water temp	Safety Notes	Normal lux	Night lux	Local lux	Standby grade	Colour render	Control	Plane	Medical Location	
		Store - General	1	16.0	Storage Area Equipment	W1585	28	16	Radiant Panels	Remote Sensor Adj.	No	None	Central General Extract	0	3	Negative	None	43	n/a		200	n/a	None	A	80	Presence detection	Floor 0m	See Guidance Notes	n/a
		Store - Equipment	1	10.0	Storage Area Equipment	W1585	28	16	Radiant Panels	Remote Sensor Adj.	No	None	Central General Extract	0	3	Negative	None	43	n/a		200	n/a	None	A	80	Presence detection	Floor 0m	See Guidance Notes	n/a
		Hoist Bay	1	3.0	Circulation Equipment Storage Bays	G0180-03	28	16	Adjacent Space Transfer Air	None	No	None	Central General Extract	0	3	Negative	None	43	n/a		200	n/a	None	A	80	Presence detection	Floor 0m	See Guidance Notes	n/a
		Disposal Hold	1	10.0	Disposal Hold	Y0646	28	18	Adjacent Space Transfer Air	None	No	None	Central Dirty Extract	0	10	Negative	None	43	n/a		100	n/a	None	A	90	Presence detection	Floor 0m	See Guidance Notes	n/a
		Ward Kitchen	1	12.0	Ward Kitchen	P0627-01	28	18	Adjacent Space Transfer Air	None	Yes	Ceiling Cassette - Chilled Water	Central General Extract	0	6	Negative	G4	n/a	60		500	n/a	None	A	80	Switch	General working plane 1m	See Guidance Notes	n/a
		DSR	1	7.0	DSR	Y1510	28	18	Adjacent Space Transfer Air	None	No	None	Central Dirty Extract	0	6	Negative	None	43	60		100	n/a	None	A	90	Presence detection	Floor 0m	See Guidance Notes	n/a
		Snoezelen Room	1	12.0	Consulting Room	C0224-??	28	18	Radiant Panels	Remote Sensor Adj.	Yes	Comfort Cooled Fresh Air	Central Supply and Extract	3	3	Balanced	G4	43	41		300	n/a	1000	A	80	Switch	Bed / Trolley 1.45m	See Guidance Notes	1
		WC Accessible	2	4.5	Toilet	V0922	28	18	Adjacent Space Transfer Air	None	No	None	Central Dirty Extract	0	10	Negative	None	43	41		200	n/a	None	A	80	Presence detection	Floor 0m	See Guidance Notes	n/a
		Rehabilitation Room	1	30.0	Consulting Room	C0224-??	28	18	Radiant Panels	Remote Sensor Adj.	Yes	Comfort Cooled Fresh Air	Central Supply and Extract	3	3	Balanced	G4	43	41		300	n/a	1000	A	80	Switch	Bed / Trolley 1.45m	See Guidance Notes	1
		Waiting Area	1	12.0	Waiting Room	J0132-02	28	18	Radiant Panels	Remote Sensor Adj.	Yes	Comfort Cooled Fresh Air	Central Supply and Extract	5	5	Balanced	G4	43	n/a		300	n/a	None	A	80	Switch	Floor 0m	See Guidance Notes	n/a
		Reception / Staff Base	1	3.0	Reception	J0132-01	28	18	Radiant Panels	Remote Sensor Adj.	Yes	Comfort Cooled Fresh Air	Central Supply Air	4	4	Balanced	G4	43	n/a		300	n/a	None	A	80	Switch	Desk 0.75 to 0.85m	See Guidance Notes	n/a
		Touchdown Base	1	2.0	staff base	T0151	28	18	Radiant Panels	Remote Sensor Adj.	No	None	Central Supply and Extract	10l/s/per person	10l/s/per person	Balanced	G4	n/a	n/a		200/300	n/a	None	A	80	Switch / Dimmer	Desk 0.75 to 0.85m	See Guidance Notes	n/a
		Single Bedroom (RHSC)	3	17.0	Bedroom	B0305-01	25	18	Radiant Panels	Remote Sensor Adj.	Yes	Comfort Cooled Fresh Air	Natural & Central Supply Air	4	via ensuite	Balanced	G4	43	41		100	5	300	A	80	Switch / Dimmer	Bed / Trolley 1.45m	See Guidance Notes	1
		Single Isolation Bedroom (RHSC)	4	17.0	Isolation Bedroom	B0308	25	21	Adjacent Space Transfer Air	BMS Adjustable Sensor	Yes	Comfort Cooled Fresh Air	Supply via lobby	10	0	Balanced	F7	43	41		100	5	300	A	80	Switch / Dimmer	Bed / Trolley 1.45m	See Guidance Notes	1
		Isolation Bedroom Entrance Lobby	4	4.0	Isolation Lobby	G0510	25	18	Warm Air - Reheat Battery	Local / BMS Adjustable Sensor	Yes	Comfort Cooled Fresh Air	Central Supply	69	0	Positive	F7	43	n/a		200	n/a	None	A	80	Presence detection	Floor 0m	See Guidance Notes	n/a
		En-suite wheelchair-accessible WC, Shower & wash	7	4.5	Bathroom	V1643	28	20	Adjacent Space Transfer Air	None	No	None	Central Dirty Extract	0	10	Negative	None	43	41		200	n/a	None	A	80	Presence detection	Floor 0m	See Guidance Notes	n/a
		Patients' Assisted Bathroom	1	14.0	Bathroom	V1736	28	20	Adjacent Space Transfer Air	None	No	None	Central Dirty Extract	0	10	Negative	None	43	41		200	n/a	None	A	80	Presence detection	Floor 0m	See Guidance Notes	n/a
		Multi Bed Room: day care, 4 beds & 2 chairs	1	72.5	Multi-bed Wards	B0405-01	25	18	Radiant Panels	Remote Sensor Adj.	Yes	Comfort Cooled Fresh Air	Natural and Central Supply Air	4	via ensuite	positive to ensuite	G4	43	41		100	5	300	A	80	switch / dimmer	Bed / Trolley 1.45m	See Guidance Notes	n/a
		Single Bedroom (RHSC)	3	17.0	Bedroom	B0305-01	25	18	Radiant Panels	Remote Sensor Adj.	Yes	Comfort Cooled Fresh Air	Natural & Central Supply Air	4	via ensuite	Balanced	G4	43	41		100	5	300	A	80	Switch / Dimmer	Bed / Trolley 1.45m	See Guidance Notes	1
		En-suite wheelchair-accessible WC, Shower & wash	4	4.5	Bathroom	V1643	28	20	Adjacent Space Transfer Air	None	No	None	Central Dirty Extract	0	10	Negative	None	43	41		200	n/a	None	A	80	Presence detection	Floor 0m	See Guidance Notes	n/a
		Treatment Room	1	12.0	Treatment Room	X0105	28	18	Radiant Panels	Remote Sensor Adj.	Yes	Comfort Cooled Fresh Air	Central Supply Air	10	0	Positive	F7	43	41		500	n/a	1000	A	90	Switch	Bed / Trolley 1.45m	See Guidance Notes	n/a
		Clean Utility	1	16.0	Clean Utility	T0101	28	18	Radiant Panels	Remote Sensor Adj.	Yes	Comfort Cooled Fresh Air	Central Supply Air	6	0	Positive	G4	43	41		150	n/a	None	A	80	Presence detection	General working plane 1m	See Guidance Notes	n/a
		Single Bedroom	3	17.0	Bedroom	B0305-01	25	18	Radiant Panels	Remote Sensor Adj.	Yes	Comfort Cooled Fresh Air	Natural & Central Supply Air	4	via ensuite	Balanced	G4	43	41		100	5	300	A	80	Switch / Dimmer	Bed / Trolley 1.45m	See Guidance Notes	1
		En-suite wheelchair-accessible WC, Shower & wash	3	4.5	Bathroom	V1643	28	20	Adjacent Space Transfer Air	None	No	None	Central Dirty Extract	0	10	Negative	None	43	41		200	n/a	None	A	80	Presence detection	Floor 0m	See Guidance Notes	n/a
		Kitchen/ Lounge/Social Space	1	25.0	Common room/staff room/lounge	D1120-02	28	18	Radiant Panels	Remote Sensor Adj.	Yes	Comfort Cooled Fresh Air	Central Supply and Extract	6	8	Negative	G4	43	41		300	n/a	None	A	80	Switch	Floor 0m	See Guidance Notes	n/a
		Quiet Study Room	1	10.0	Cellular / Ward Offices	M0251	25	18	Radiant Panels	Remote Sensor Adj.	Yes	Comfort Cooled Fresh Air	Central Supply and Extract	4	4	Balanced	G4	43	n/a		300	n/a	None	A	80	Switch	Desk 0.75 to 0.85m	See Guidance Notes	n/a
C1.4	Haematology / Oncology Inpatients & Daycases - 17 Beds & 2 Chairs	Treatment / Clean Utility	1	18.0	Treatment Room	X0105-??	28	18	Radiant Panels	Remote Sensor Adj.	Yes	Comfort Cooled Fresh Air	Central Supply Air	10	0	Positive	F7	43	41		500	n/a	1000	A	90	Switch	Bed / Trolley 1.45m	See Guidance Notes	n/a
		Resuscitation Trolley Bay	1	1.0	Circulation Equipment Storage Bays	G0180-01	28	16	Adjacent Space Transfer Air	None	No	None	Central General Extract	0	3	Negative	None	43	n/a		200	n/a	None	A	80	Presence detection	Floor 0m	See Guidance Notes	n/a
		Hoist Bay	1	3.0	Circulation Equipment Storage Bays	G0180-03	28	16	Adjacent Space Transfer Air	None	No	None	Central General Extract	0	3	Negative	None	43	n/a		200	n/a	None	A	80	Presence detection	Floor 0m	See Guidance Notes	n/a
		Dirty Utility	1	14.0	Dirty utility	Y0431	28	18	Adjacent Space Transfer Air	None	No	None	Central Dirty Extract	0	6	Negative	None	43	41		200	n/a	None	A	80	Presence detection	Floor 0m	See Guidance Notes	n/a
		Complementary Therapy Room	1	10.0	Consulting Room	X0613	28	18	Radiant Panels	Remote Sensor Adj.	Yes	Comfort Cooled Fresh Air	Central Supply and Extract	3	3	Balanced	G4	43	41		300	n/a	1000	A	80	Switch	Bed / Trolley 1.45m	See Guidance Notes	1
		Ward Management Office	1	10.0	Cellular / Ward Offices	M0251	25	18	Radiant Panels	Remote Sensor Adj.	Yes	Comfort Cooled Fresh Air	Central Supply and Extract	4	4	Balanced	G4	43	n/a		300	n/a	None	A	80	Switch	Desk 0.75 to 0.85m	See Guidance Notes	n/a
		Consultant Office (5 person)	1	25.0	Cellular / Ward Offices	M0251	25	18	Radiant Panels	Remote Sensor Adj.	Yes	Comfort Cooled Fresh Air	Central Supply and Extract	4	4	Balanced	G4	43	n/a		300	n/a	None	A	80	Switch	Desk 0.75 to 0.85m	See Guidance Notes	n/a
		Medical Staff Office	1	20.0	Cellular / Ward Offices	M0251	25	18	Radiant Panels	Remote Sensor Adj.	Yes	Comfort Cooled Fresh Air	Central Supply and Extract	4	4	Balanced	G4	43	n/a		300	n/a	None	A	80	Switch	Desk 0.75 to 0.85m	See Guidance Notes	n/a
		Nursing Staff Office	1	15.0	Cellular / Ward Offices	M0251	25	18	Radiant Panels	Remote Sensor Adj.	Yes	Comfort Cooled Fresh Air	Central Supply and Extract	4	4	Balanced	G4	43	n/a		300	n/a	None	A	80	Switch	Desk 0.75 to 0.85m	See Guidance Notes	n/a
		Multi-Disciplinary Office	1	18.0	Multi Disciplinary Work Areas	M0254	25	18	Radiant Panels	Remote Sensor Adj.	Yes	Comfort Cooled Fresh Air	Central Supply and Extract	4	4	Balanced	G4	43	n/a		300	n/a	None	A	80	Switch	Desk 0.75 to 0.85m	See Guidance Notes	n/a
		Research Staff Office	1	19.0	Cellular / Ward Offices	M0251	25	18	Radiant Panels	Remote Sensor Adj.	Yes	Comfort Cooled Fresh Air	Central Supply and Extract	4	4	Balanced	G4	43	n/a		300	n/a	None	A	80	Switch	Desk 0.75 to 0.85m	See Guidance Notes	n/a
		WC - Staff	2	3.0	Toilet	V1010	28	18	Adjacent Space Transfer Air	None	No	None	Central Dirty Extract	0	10	Negative	None	43	41		200	n/a	None	A	80	Presence detection	Floor 0m	See Guidance Notes	n/a
		WC - Visitors	1	3.0	Toilet	V1010	28	18	Adjacent Space Transfer Air	None	No	None	Central Dirty Extract	0	10	Negative	None	43	41		200	n/a	None	A	80	Presence detection	Floor 0m	See Guidance Notes	n/a
		Play Room	1	25.0	Common room/staff room/lounge	H1322-01	28	18	Radiant Panels	Remote Sensor Adj.	Yes	Comfort Cooled Fresh Air	Central Supply and Extract	6	8	Negative	G4	43	41		300	n/a	None	A	80	Switch	Floor 0m	See Guidance Notes	n/a
		Pantry	1	8.0	Pantry	P0627	28	18	Radiant Panels	Remote Sensor Adj.	Yes	Comfort Cooled Fresh Air	Central Supply and Extract	6	8	Negative	G4	43	41		300	n/a	None	A	80	Switch	Floor 0m	See Guidance Notes	n/a
		Linen Bay (1 Trolley)	1	1.5	Linen Bay	W1594-01	28	16	Adjacent Space Transfer Air	None	No	None	Central Extract	0	3	Negative	None	43	n/a		200	n/a	None	A	80	Presence detection	Floor 0m	See Guidance Notes	n/a
		Store - General	1	10.0	Storage Area Equipment	W1585	28	16	Radiant Panels	Remote Sensor Adj.	No	None	Central General Extract	0	3	Negative	None	43	n/a		200	n/a	None	A	80	Presence detection	Floor 0m	See Guidance Notes	n/a
		Ward Kitchen	1	12.0	Ward Kitchen	P0627-01	28	18	Adjacent Space Transfer Air	None	Yes	Ceiling Cassette - Chilled Water	Central General Extract	0	6	Negative	G4	n/a	60		500	n/a	None	A	80	Switch	General working plane 1m	See Guidance Notes	n/a
		Store - Equipment	1	10.0	Storage Area Equipment	W1585	28	16	Radiant Panels	Remote Sensor Adj.	No	None	Central General Extract	0	3	Negative	None	43	n/a		200	n/a	None	A	80	Presence detection	Floor 0m	See Guidance Notes	n/a
		Pharmacy Base	1	9.0	Consulting Room	T0151	28	18	Radiant Panels	Remote Sensor Adj.	Yes	Comfort Cooled Fresh Air	Central Supply and Extract	3	3	Balanced	G4	43	41		300	n/a	1000	A	80	Switch	Bed / Trolley 1.45m	See Guidance Notes	1
		Patient Interview Room	1	9.0	Meeting Room	M0724	25	18	Radiant Panels	Remote Sensor Adj.	Yes	Ceiling Cassette - Chilled Water	Central Supply and Extract	10 l/s per person	10 l/s per person	Balanced	G4	43	n/a		300	n/a	None	A	80	Switch	Desk 0.75 to 0.85m	See Guidance Notes	n/a
		Family Sitting Room	1	27.0	Common room/staff room/lounge	D1120	28	18	Radiant Panels	Remote Sensor Adj.	Yes	Comfort Cooled Fresh Air	Central Supply and Extract	6	8	Negative	G4	43	41		300	n/a	None	A	80	Switch	Floor 0m	See Guidance Notes	n/a
C1.5	Med / Surg / Neuro / Haemo Shared Support	Breast Pump Room	1	4.0	Baby Feeding	S0012	25	18	Radiant Panels	Remote Sensor Adj.	No	None	Central Supply Air	5	0	Positive	G4	43	41		100	n/a	None	A	80	Presence detection	Floor 0m	See Guidance Notes	n/a
		Nappy Change	1	4.0	Nappy Change	V1131	25	18	Radiant Panels	Remote Sensor Adj.	No	None	Central Dirty Extract	0	10	Negative	None	43	41		100	n/a	None	A	80	Presence detection	Floor 0m	See Guidance Notes	n/a
		Baby Infant / Feeding Room	1	4.0	Baby Feeding	S0012	25	18	Radiant Panels	Remote Sensor Adj.	No	None	Central Supply Air	5	0	Positive	G4	43	41		100	n/a	None	A	80	Presence detection	Floor 0m	See Guidance Notes	n/a
		WC-Wheelchair Accessible	2	4.5	Toilet	V0922	28	18	Adjacent Space Transfer Air	None	No	None	Central Dirty Extract	0	10	Negative	None	43	41		200	n/a	None	A	80	Presence detection	Floor 0m	See Guidance Notes	n/a
C1.6	Adolescent Shared Accommodation	Dining / Recreation Room	1	26.0	Common room/staff room/lounge	D0608-01	28	18	Radiant Panels	Remote Sensor Adj.	Yes	Comfort Cooled Fresh Air	Central Supply and Extract	6	8	Negative	G4	43	41		300	n/a	None	A	80	Switch	Floor 0m	See Guidance Notes	n/a
		Quiet Room / Study	1	10.0	Cellular / Ward Offices	M0251	25	18	Radiant Panels	Remote Sensor Adj.	Yes	Comfort Cooled Fresh Air	Central Supply and Extract	4	4	Balanced	G4	43	n/a		300	n/a	None	A	80	Switch	Desk 0.75 to 0.85m	See Guidance Notes	n/a
C1.7	Paediatric Neurophysiology	EEG Recording Room	2	16.0	Diagnostic room	X0125	25	18	Warm Air - Reheat Battery	BMS Adjustable Sensor	Yes	Comfort Cooled	Central Supply and Extract	to suit location	to suit location	Balanced	F7	43	41		300	n/a	1000	A	80	Switch / Dimmer	General working plane 1m	See Guidance Notes	1
		Evoked Potential Recording Room	1	16.0	Diagnostic room	C0800	25	18	Warm Air - Reheat Battery	BMS Adjustable Sensor	Yes	Comfort Cooled	Central Supply and Extract	to suit location	to suit location	Balanced	F7	43	41		300	n/a	1000	A	80	Switch / Dimmer	General working plane 1m	See Guidance Notes	1
		EEG Review Room	1	15.0	Cellular / Ward Offices	M0251	25	18	Radiant Panels	Remote Sensor Adj.	Yes	Comfort Cooled Fresh Air	Central Supply and Extract	4	4	Balanced	G4	43	n/a		300	n/a	None	A	80	Switch	Desk 0.75 to 0.85m	See Guidance Notes	n/a
		Reception Desk/Staff Base	1	3.0	Reception	J0132-01	28	18	Radiant Panels	Remote Sensor Adj.	Yes	Comfort Cooled Fresh Air	Central Supply Air	4	4	Balanced	G4	43	n/a		300	n/a	None	A	80	Switch	Desk 0.75 to 0.85m	See Guidance Notes	n/a

RHSC / DCN Environmental Matrix

Dept	Dept	Room Name	Qty		Room Function	ADB Code	Temp (max)	Temp (min)	Heating Type	Heating Control	Cooling (present)	Cooling (type)	Ventilation (type)	Supply (ac/hr)	Extract (ac/hr)	Relative pressure	Min filtration	Surface temp	Water temp	Safety Notes	Normal lux	Night lux	Local lux	Standby grade	Colour render	Control	Plane	Medical Location	
C1.8	Surgical Short Stay Inpatients 14 Beds	Dining / Play Room	1	15.0	Eating/Drinking	D0608-01	28	18	Radiant Panels	Remote Sensor Adj.	Yes	Comfort Cooled Fresh Air	Central Supply and Extract	10 l/s per person	10 l/s per person	Balanced	G4	43	41		300	n/a	None	A	80	Switch	Floor 0m	See Guidance Notes	n/a
		Single Bedroom	4	17.0	Bedroom	B0305-01	25	18	Radiant Panels	Remote Sensor Adj.	Yes	Comfort Cooled Fresh Air	Natural & Central Supply Air	4	via ensuite	Balanced	G4	43	41		100	5	300	A	80	Switch / Dimmer	Bed / Trolley 1.45m	See Guidance Notes	1
		En-suite Shower / WC / WHB	4	4.5	Bathroom	V1643	28	20	Adjacent Space Transfer Air	None	No	None	Central Dirty Extract	0	10	Negative	None	43	41		200	n/a	None	A	80	Presence detection	Floor 0m	See Guidance Notes	n/a
		4 Bed Room	2	58.5	Multi-bed Wards	B0405	25	18	Radiant Panels	Remote Sensor Adj.	Yes	Comfort Cooled Fresh Air	Natural and Central Supply Air	4	via ensuite	positive to ensuite	G4	43	41		100	5	300	A	80	switch / dimmer	Bed / Trolley 1.45m	See Guidance Notes	n/a
		En-suite Shower / WC / WHB	2	6.0	Bathroom	V1643	28	20	Adjacent Space Transfer Air	None	No	None	Central Dirty Extract	0	10	Negative	None	43	41		200	n/a	None	A	80	Presence detection	Floor 0m	See Guidance Notes	n/a
		Single Bedroom (RHSC)	2	17.0	Bedroom	B0305-01	25	18	Radiant Panels	Remote Sensor Adj.	Yes	Comfort Cooled Fresh Air	Natural & Central Supply Air	4	via ensuite	Balanced	G4	43	41		100	5	300	A	80	Switch / Dimmer	Bed / Trolley 1.45m	See Guidance Notes	1
		En-suite wheelchair-accessible WC, Shower & wash	2	4.5	Bathroom	V1643	28	20	Adjacent Space Transfer Air	None	No	None	Central Dirty Extract	0	10	Negative	None	43	41		200	n/a	None	A	80	Presence detection	Floor 0m	See Guidance Notes	n/a
		Patient Assisted Bathroom	1	14.0	Bathroom	V1736	28	20	Adjacent Space Transfer Air	None	No	None	Central Dirty Extract	0	10	Negative	None	43	41		200	n/a	None	A	80	Presence detection	Floor 0m	See Guidance Notes	n/a
		Treatment Room	1	16.0	Treatment Room	X0105	28	18	Radiant Panels	Remote Sensor Adj.	Yes	Comfort Cooled Fresh Air	Central Supply Air	10	0	Positive	F7	43	41		500	n/a	1000	A	90	Switch	Bed / Trolley 1.45m	See Guidance Notes	n/a
		Ward Management Office	1	9.0	Cellular / Ward Offices	M0251	25	18	Radiant Panels	Remote Sensor Adj.	Yes	Comfort Cooled Fresh Air	Central Supply and Extract	4	4	Balanced	G4	43	n/a		300	n/a	None	A	80	Switch	Desk 0.75 to 0.85m	See Guidance Notes	n/a
		Touchdown Base	1	2.0	staff base	T0151	28	18	Radiant Panels	Remote Sensor Adj.	No	None	Central Supply and Extract	10l/s/per person	10l/s/per person	Balanced	G4	n/a	n/a		200/300	n/a	None	A	80	Switch / Dimmer	Desk 0.75 to 0.85m	See Guidance Notes	n/a
		Staff WC	1	3.0	Toilet	V1010	28	18	Adjacent Space Transfer Air	None	No	None	Central Dirty Extract	0	10	Negative	None	43	41		200	n/a	None	A	80	Presence detection	Floor 0m	See Guidance Notes	n/a
		WC - Visitors	1	3.0	Toilet	V1010	28	18	Adjacent Space Transfer Air	None	No	None	Central Dirty Extract	0	10	Negative	None	43	41		200	n/a	None	A	80	Presence detection	Floor 0m	See Guidance Notes	n/a
		Clean Utility	1	12.0	Clean Utility	T0101	28	18	Radiant Panels	Remote Sensor Adj.	Yes	Comfort Cooled Fresh Air	Central Supply Air	6	0	Positive	G4	43	41		150	n/a	None	A	80	Presence detection	General working plane 1m	See Guidance Notes	n/a
		Dirty Utility	1	14.0	Dirty utility	Y0431	28	18	Adjacent Space Transfer Air	None	No	None	Central Dirty Extract	0	6	Negative	None	43	41		200	n/a	None	A	80	Presence detection	Floor 0m	See Guidance Notes	n/a
		Ward Kitchen	1	12.0	Ward Kitchen	P0627-01	28	18	Adjacent Space Transfer Air	None	Yes	Ceiling Cassette - Chilled Water	Central General Extract	0	6	Negative	G4	n/a	60		500	n/a	None	A	80	Switch	General working plane 1m	See Guidance Notes	n/a
		Resuscitation Trolley Bay	1	1.0	Circulation Equipment Storage Bays	G0180-01	28	16	Adjacent Space Transfer Air	None	No	None	Central General Extract	0	3	Negative	None	43	n/a		200	n/a	None	A	80	Presence detection	Floor 0m	See Guidance Notes	n/a
		Linen Bay (1 Trolley)	1	1.5	Linen Bay	W1594-01	28	16	Adjacent Space Transfer Air	None	No	None	Central Extract	0	3	Negative	None	43	n/a		200	n/a	None	A	80	Presence detection	Floor 0m	See Guidance Notes	n/a
		Store - General	1	10.0	Storage Area Equipment	W1585	28	16	Radiant Panels	Remote Sensor Adj.	No	None	Central General Extract	0	3	Negative	None	43	n/a		200	n/a	None	A	80	Presence detection	Floor 0m	See Guidance Notes	n/a
		Store - Equipment	1	10.0	Storage Area Equipment	W1585	28	16	Radiant Panels	Remote Sensor Adj.	No	None	Central General Extract	0	3	Negative	None	43	n/a		200	n/a	None	A	80	Presence detection	Floor 0m	See Guidance Notes	n/a
		Disposal Hold	1	10.0	Disposal Hold	Y0646	28	18	Adjacent Space Transfer Air	None	No	None	Central Dirty Extract	0	10	Negative	None	43	n/a		100	n/a	None	A	90	Presence detection	Floor 0m	See Guidance Notes	n/a
		WC Wheelchair Accessible	2	4.5	Toilet	V0922	28	18	Adjacent Space Transfer Air	None	No	None	Central Dirty Extract	0	10	Negative	None	43	41		200	n/a	None	A	80	Presence detection	Floor 0m	See Guidance Notes	n/a
		DSR	1	7.0	DSR	Y1510	28	18	Adjacent Space Transfer Air	None	No	None	Central Dirty Extract	0	6	Negative	None	43	60		100	n/a	None	A	90	Presence detection	Floor 0m	See Guidance Notes	n/a
C2	Wards Support Areas	Staff Room	1	48.0	Common room/staff room/lounge	D0608-03	28	18	Radiant Panels	Remote Sensor Adj.	Yes	Comfort Cooled Fresh Air	Central Supply and Extract	6	8	Negative	G4	43	41		300	n/a	None	A	80	Switch	Floor 0m	See Guidance Notes	n/a
		DSR	1	7.0	DSR	Y1510	28	18	Adjacent Space Transfer Air	None	No	None	Central Dirty Extract	0	6	Negative	None	43	60		100	n/a	None	A	90	Presence detection	Floor 0m	See Guidance Notes	n/a
		Seminar Room	1	25.0	Meeting Room	H1313-03	25	18	Radiant Panels	Remote Sensor Adj.	Yes	Ceiling Cassette - Chilled Water	Central Supply and Extract	10 l/s per person	10 l/s per person	Balanced	G4	43	n/a		300	n/a	None	A	80	Switch	Desk 0.75 to 0.85m	See Guidance Notes	n/a
C3	Special Feeds Unit	Food Prep Area	1	24.0	Ward Kitchen	P0627-01	28	18	Adjacent Space Transfer Air	None	Yes	Ceiling Cassette - Chilled Water	Central General Extract	0	6	Negative	G4	n/a	60		500	n/a	None	A	80	Switch	General working plane 1m	See Guidance Notes	n/a
		Store - Feeds	1	8.0	Storage Area Equipment	W1585-??	28	16	Radiant Panels	Remote Sensor Adj.	No	None	Central General Extract	0	3	Negative	None	43	n/a		200	n/a	None	A	80	Presence detection	Floor 0m	See Guidance Notes	n/a
		Office Ante Room	1	9.0	Cellular / Ward Offices	M0251	25	18	Radiant Panels	Remote Sensor Adj.	Yes	Comfort Cooled Fresh Air	Central Supply and Extract	4	4	Balanced	G4	43	n/a		300	n/a	None	A	80	Switch	Desk 0.75 to 0.85m	See Guidance Notes	n/a
		Wash Room	1	5.0	Bathroom	V1736	28	20	Adjacent Space Transfer Air	None	No	None	Central Dirty Extract	0	10	Negative	None	43	41		200	n/a	None	A	80	Presence detection	Floor 0m	See Guidance Notes	n/a
C4	Sleep Lab	Sleep Room	2	15.0	Bedroom	B0704	25	18	Radiant Panels	Remote Sensor Adj.	Yes	Comfort Cooled Fresh Air	Natural & Central Supply Air	4	via ensuite	Balanced	G4	43	41		100	5	300	A	80	Switch / Dimmer	Bed / Trolley 1.45m	See Guidance Notes	1
		En-suite wheelchair-accessible WC, Shower & wash	2	6.0	Bathroom	V1643	28	20	Adjacent Space Transfer Air	None	No	None	Central Dirty Extract	0	10	Negative	None	43	41		200	n/a	None	A	80	Presence detection	Floor 0m	See Guidance Notes	n/a
		Parents Room	2	10.0	Bedroom	D1311	25	18	Radiant Panels	Remote Sensor Adj.	Yes	Comfort Cooled Fresh Air	Natural & Central Supply Air	4	via ensuite	positive to ensuite	G4	43	41		100	5	300	A	80	Switch / Dimmer	Bed / Trolley 1.45m	See Guidance Notes	1
		Control Room	1	15.0	Cellular / Ward Offices	M0251	25	18	Radiant Panels	Remote Sensor Adj.	Yes	Comfort Cooled Fresh Air	Central Supply and Extract	4	4	Balanced	G4	43	n/a		300	n/a	None	A	80	Switch	Desk 0.75 to 0.85m	See Guidance Notes	n/a
		Store	1	6.0	Storage Area Equipment	W1585	28	16	Radiant Panels	Remote Sensor Adj.	No	None	Central General Extract	0	3	Negative	None	43	n/a		200	n/a	None	A	80	Presence detection	Floor 0m	See Guidance Notes	n/a
C5	Classrooms	Primary Classroom	1	18.0	Classroom	H1313-03	25	18	Radiant Panels	Remote Sensor Adj.	Yes	Ceiling Cassette - Chilled Water	Central Supply and Extract	10 l/s per person	10 l/s per person	Balanced	G4	43	41		300	n/a	None	A	80	Switch	Desk 0.75 to 0.85m	See Guidance Notes	n/a
		Upper Primary Classroom	1	18.0	Classroom	H1313-03	25	18	Radiant Panels	Remote Sensor Adj.	Yes	Ceiling Cassette - Chilled Water	Central Supply and Extract	10 l/s per person	10 l/s per person	Balanced	G4	43	41		300	n/a	None	A	80	Switch	Desk 0.75 to 0.85m	See Guidance Notes	n/a
		Secondary Classroom	1	18.0	Classroom	H1313-03	25	18	Radiant Panels	Remote Sensor Adj.	Yes	Ceiling Cassette - Chilled Water	Central Supply and Extract	10 l/s per person	10 l/s per person	Balanced	G4	43	41		300	n/a	None	A	80	Switch	Desk 0.75 to 0.85m	See Guidance Notes	n/a
		Resource Storage	1	10.0	Storage Area Equipment	W1585-??	28	16	Radiant Panels	Remote Sensor Adj.	No	None	Central General Extract	0	3	Negative	None	43	n/a		200	n/a	None	A	80	Presence detection	Floor 0m	See Guidance Notes	n/a
		Administration Area	1	15.0	Cellular / Ward Offices	M0251	25	18	Radiant Panels	Remote Sensor Adj.	Yes	Comfort Cooled Fresh Air	Central Supply and Extract	4	4	Balanced	G4	43	n/a		300	n/a	None	A	80	Switch	Desk 0.75 to 0.85m	See Guidance Notes	n/a
		WC Ambulant	1	3.0	Toilet	V1010	28	18	Adjacent Space Transfer Air	None	No	None	Central Dirty Extract	0	10	Negative	None	43	41		200	n/a	None	A	80	Presence detection	Floor 0m	See Guidance Notes	n/a
		WC - Wheelchair accessible	1	4.5	Toilet	V0922	28	18	Adjacent Space Transfer Air	None	No	None	Central Dirty Extract	0	10	Negative	None	43	41		200	n/a	None	A	80	Presence detection	Floor 0m	See Guidance Notes	n/a
		Store	1	3.0	Storage Area Equipment	W1585	28	16	Radiant Panels	Remote Sensor Adj.	No	None	Central General Extract	0	3	Negative	None	43	n/a		200	n/a	None	A	80	Presence detection	Floor 0m	See Guidance Notes	n/a
		Consult/Examination	10	15.5	Consulting Room	C0224-01	28	18	Radiant Panels	Remote Sensor Adj.	Yes	Comfort Cooled Fresh Air	Central Supply and Extract	3	3	Balanced	G4	43	41		300	n/a	1000	A	80	Switch	Bed / Trolley 1.45m	See Guidance Notes	1
		Child Protection Room	1	24.0	Consulting Room	C0224-??	28	18	Radiant Panels	Remote Sensor Adj.	Yes	Comfort Cooled Fresh Air	Central Supply and Extract	3	3	Balanced	G4	43	41		300	n/a	1000	A	80	Switch	Bed / Trolley 1.45m	See Guidance Notes	1
		Consult/Examination (Child Protection)	1	15.5	Consulting Room	C0224-?	28	18	Radiant Panels	Remote Sensor Adj.	Yes	Comfort Cooled Fresh Air	Central Supply and Extract	3	3	Balanced	G4	43	41		300	n/a	1000	A	80	Switch	Bed / Trolley 1.45m	See Guidance Notes	1
		Consult/Multi-Disciplinary	1	24.0	Consulting Room	C0217	28	18	Radiant Panels	Remote Sensor Adj.	Yes	Comfort Cooled Fresh Air	Central Supply and Extract	3	3	Balanced	G4	43	41		300	n/a	1000	A	80	Switch	Bed / Trolley 1.45m	See Guidance Notes	1
		Treatment Room (with prep area)	1	16.0	Treatment Room	X0105-01	28	18	Radiant Panels	Remote Sensor Adj.	Yes	Comfort Cooled Fresh Air	Central Supply Air	10	0	Positive	F7	43	41		500	n/a	1000	A	90	Switch	Bed / Trolley 1.45m	See Guidance Notes	n/a
		Plaster Suite (3 bays)	1	40.0	Consulting Room	X0206	28	18	Radiant Panels	Remote Sensor Adj.	Yes	Comfort Cooled Fresh Air	Central Supply and Extract	3	3	Balanced	G4	43	41		300	n/a	1000	A	80	Switch	Bed / Trolley 1.45m	See Guidance Notes	1
		Store: Plaster	1	6.0	Storage Area Equipment	W1585-??	28	16	Radiant Panels	Remote Sensor Adj.	No	None	Central General Extract	0	3	Negative	None	43	n/a		200	n/a	None	A	80	Presence detection	Floor 0m	See Guidance Notes	n/a
		Orthotics Workshop	1	16.0	Small Workshop	K0420	28	18	Radiant Panels	Remote Sensor Adj.	Yes	Comfort Cooled Fresh Air	Central Supply and Extract	4	6	Negative	G4	43	41		300	n/a	None	A	80	Switch	Desk 0.75 to 0.85m	See Guidance Notes	n/a
		Equipment / General Store	1	6.0	Storage Area Equipment	W1585	28	16	Radiant Panels	Remote Sensor Adj.	No	None	Central General Extract	0	3	Negative	None	43	n/a		200	n/a	None	A	80	Presence detection	Floor 0m	See Guidance Notes	n/a
		Store Room	1	8.0	Storage Area Equipment	W1585-??	28	16	Radiant Panels	Remote Sensor Adj.	No	None	Central General Extract	0	3	Negative	None	43	n/a		200	n/a	None	A	80	Presence detection	Floor 0m	See Guidance Notes	n/a
		Physical Measurement	2	3.5	Consulting Room	C0522-02	28	18	Radiant Panels	Remote Sensor Adj.	Yes	Comfort Cooled Fresh Air	Central Supply and Extract	3	3	Balanced	G4	43	41		300	n/a	1000	A	80	Switch	Bed / Trolley 1.45m	See Guidance Notes	1
		Infant Measuring Room	1	6.0	Consulting Room	C0522-02	28	18	Radiant Panels	Remote Sensor Adj.	Yes	Comfort Cooled Fresh Air	Central Supply and Extract	3	3	Balanced	G4	43	41		300	n/a	1000	A	80	Switch	Bed / Trolley 1.45m	See Guidance Notes	1
		Mobile Hoist Bay	1	3.0	Circulation Equipment Storage Bays	G0180-03	28	16	Adjacent Space Transfer Air	None	No	None	Central General Extract	0	3	Negative	None	43	n/a		200	n/a	None	A	80	Presence detection	Floor 0m	See Guidance Notes	n/a
		Clean Utility	1	8.0	Clean Utility	T0101	28	18	Radiant Panels	Remote Sensor Adj.	Yes	Comfort Cooled Fresh Air	Central Supply Air	6	0	Positive	G4	43	41		150	n/a	None	A	80	Presence detection	General working plane 1m	See Guidance Notes	n/a
		Dirty Utility	1	11.0	Dirty utility	Y0431	28	18	Adjacent Space Transfer Air	None	No	None	Central Dirty Extract	0	6	Negative	None	43	41		200	n/a	None	A	80	Presence detection	Floor 0m	See Guidance Notes	n/a
		DSR	1	7.0	DSR	Y1510	28	18	Adjacent Space Transfer Air	None	No	None	Central Dirty Extract	0	6	Negative	None	43	60		100	n/a	None	A	90	Presence detection	Floor 0m	See Guidance Notes	n/a
		Disposal Hold	1	10.0	Disposal Hold	Y0646	28	18	Adjacent Space Transfer Air	None	No	None	Central Dirty Extract	0	10	Negative	None	43	n/a		100	n/a	None	A	90	Presence detection	Floor 0m	See Guidance Notes	n/a

RHSC / DCN Environmental Matrix

Dept	Dept	Room Name	Qty		Room Function	ADB Code	Temp (max)	Temp (min)	Heating Type	Heating Control	Cooling (present)	Cooling (type)	Ventilation (type)	Supply (ac/hr)	Extract (ac/hr)	Relative pressure	Min filtration	Surface temp	Water temp	Safety Notes	Normal lux	Night lux	Local lux	Standby grade	Colour render	Control	Plane	Medical Location	
D1	RHSC Main Outpatients Department	Resuscitation Trolley Bay	1	1.0	Resus Trolley bay	G0180-01	28	18	Adjacent Space Transfer Air	None	No	None	None	0	0	n/a	None	43	n/a		500	n/a	None	A	90	Switch	Bed / Trolley 1.45m	See Guidance Notes	n/a
		Phlebotomy Room	1	8.0	Consulting Room	C0224-??	28	18	Radiant Panels	Remote Sensor Adj.	Yes	Comfort Cooled Fresh Air	Central Supply and Extract	3	3	Balanced	G4	43	41		300	n/a	1000	A	80	Switch	Bed / Trolley 1.45m	See Guidance Notes	1
		Specimen/ Disabled WC	1	4.5	Toilet	V0922	28	18	Adjacent Space Transfer Air	None	No	None	Central Dirty Extract	0	10	Negative	None	43	41		200	n/a	None	A	80	Presence detection	Floor 0m	See Guidance Notes	n/a
		Linen Bay	1	1.5	Linen Bay	W1594-01	28	16	Adjacent Space Transfer Air	None	No	None	Central Extract	0	3	Negative	None	43	n/a		200	n/a	None	A	80	Presence detection	Floor 0m	See Guidance Notes	n/a
		Pantry	1	8.0	Pantry	P0627	28	18	Radiant Panels	Remote Sensor Adj.	Yes	Comfort Cooled Fresh Air	Central Supply and Extract	6	8	Negative	G4	43	41		300	n/a	None	A	80	Switch	Floor 0m	See Guidance Notes	n/a
		Staff WC	2	3.0	Toilet	V1010	28	18	Adjacent Space Transfer Air	None	No	None	Central Dirty Extract	0	10	Negative	None	43	41		200	n/a	None	A	80	Presence detection	Floor 0m	See Guidance Notes	n/a
		WC - Fully accessible changing room	1	7.0	Toilet	V0922-01	28	18	Adjacent Space Transfer Air	None	No	None	Central Dirty Extract	0	10	Negative	None	43	41		200	n/a	None	A	80	Presence detection	Floor 0m	See Guidance Notes	n/a
		Baby Infant / Feeding Room	1	4.0	Baby Feeding	S0012	25	18	Radiant Panels	Remote Sensor Adj.	No	None	Central Supply Air	5	0	Positive	G4	43	41		100	n/a	None	A	80	Presence detection	Floor 0m	See Guidance Notes	n/a
		Nappy Change	1	4.0	Nappy Change	V1131	25	18	Radiant Panels	Remote Sensor Adj.	No	None	Central Dirty Extract	0	10	Negative	None	43	41		100	n/a	None	A	80	Presence detection	Floor 0m	See Guidance Notes	n/a
		Sub Waiting Area (incl supervised play) with Nurse Base	1	46	Waiting Room	J0132-02	28	18	Radiant Panels	Remote Sensor Adj.	Yes	Comfort Cooled Fresh Air	Central Supply and Extract	5	5	Balanced	G4	43	n/a		300	n/a	None	A	80	Switch	Floor 0m	See Guidance Notes	n/a
		Sub Waiting Area	1	3.5	Waiting Room	J0132-02	28	18	Radiant Panels	Remote Sensor Adj.	Yes	Comfort Cooled Fresh Air	Central Supply and Extract	5	5	Balanced	G4	43	n/a		300	n/a	None	A	80	Switch	Floor 0m	See Guidance Notes	n/a
		Reception	1	3.0	Reception	J0132-01	28	18	Radiant Panels	Remote Sensor Adj.	Yes	Comfort Cooled Fresh Air	Central Supply Air	4	4	Balanced	G4	43	n/a		300	n/a	None	A	80	Switch	Desk 0.75 to 0.85m	See Guidance Notes	n/a
		WC wheelchair accessible	2	4.5	Toilet	V0922	28	18	Adjacent Space Transfer Air	None	No	None	Central Dirty Extract	0	10	Negative	None	43	41		200	n/a	None	A	80	Presence detection	Floor 0m	See Guidance Notes	n/a
		Consult/Examination	4	15.5	Consulting Room	C0224-01	28	18	Radiant Panels	Remote Sensor Adj.	Yes	Comfort Cooled Fresh Air	Central Supply and Extract	3	3	Balanced	G4	43	41		300	n/a	1000	A	80	Switch	Bed / Trolley 1.45m	See Guidance Notes	1
		Consult/Examination (Ophthalmology)	1	15.5	Consulting Room	C0224-?	28	18	Radiant Panels	Remote Sensor Adj.	Yes	Comfort Cooled Fresh Air	Central Supply and Extract	3	3	Balanced	G4	43	41		300	n/a	1000	A	80	Switch	Bed / Trolley 1.45m	See Guidance Notes	1
		Consult/Multi-Disciplinary	1	24.0	Consulting Room	C0217	28	18	Radiant Panels	Remote Sensor Adj.	Yes	Comfort Cooled Fresh Air	Central Supply and Extract	3	3	Balanced	G4	43	41		300	n/a	1000	A	80	Switch	Bed / Trolley 1.45m	See Guidance Notes	1
		Equipment / General Store	1	8.0	Storage Area Equipment	W1585	28	16	Radiant Panels	Remote Sensor Adj.	No	None	Central General Extract	0	3	Negative	None	43	n/a		200	n/a	None	A	80	Presence detection	Floor 0m	See Guidance Notes	n/a
		Play Therapy (inc messy play) Room	1	18.0	Common room/staff room/lounge	H1322-01	28	18	Radiant Panels	Remote Sensor Adj.	Yes	Comfort Cooled Fresh Air	Central Supply and Extract	6	8	Negative	G4	43	41		300	n/a	None	A	80	Switch	Floor 0m	See Guidance Notes	n/a
		Physical Measurement	2	3.5	Consulting Room	C0522-02	28	18	Radiant Panels	Remote Sensor Adj.	Yes	Comfort Cooled Fresh Air	Central Supply and Extract	3	3	Balanced	G4	43	41		300	n/a	1000	A	80	Switch	Bed / Trolley 1.45m	See Guidance Notes	1
		Infant Measuring Room	1	6.0	Consulting Room	C0522-02	28	18	Radiant Panels	Remote Sensor Adj.	Yes	Comfort Cooled Fresh Air	Central Supply and Extract	3	3	Balanced	G4	43	41		300	n/a	1000	A	80	Switch	Bed / Trolley 1.45m	See Guidance Notes	1
		Shower Room	1	5.0	Bathroom	V1643	28	20	Adjacent Space Transfer Air	None	No	None	Central Dirty Extract	0	10	Negative	None	43	41		200	n/a	None	A	80	Presence detection	Floor 0m	See Guidance Notes	n/a
		Mobile Hoist Bay	1	3.0	Circulation Equipment Storage Bays	G0180-03	28	16	Adjacent Space Transfer Air	None	No	None	Central General Extract	0	3	Negative	None	43	n/a		200	n/a	None	A	80	Presence detection	Floor 0m	See Guidance Notes	n/a
		Consult/Examination (Cleft)	2	18.0	Consulting Room	C0224-?	28	18	Radiant Panels	Remote Sensor Adj.	Yes	Comfort Cooled Fresh Air	Central Supply and Extract	3	3	Balanced	G4	43	41		300	n/a	1000	A	80	Switch	Bed / Trolley 1.45m	See Guidance Notes	1
		Consult/Examination (ENT)	3	17.0	Consulting Room	C0224-?	28	18	Radiant Panels	Remote Sensor Adj.	Yes	Comfort Cooled Fresh Air	Central Supply and Extract	3	3	Balanced	G4	43	41		300	n/a	1000	A	80	Switch	Bed / Trolley 1.45m	See Guidance Notes	1
		Store Room	1	1.0	Storage Area Equipment	W1585-??	28	16	Radiant Panels	Remote Sensor Adj.	No	None	Central General Extract	0	3	Negative	None	43	n/a		200	n/a	None	A	80	Presence detection	Floor 0m	See Guidance Notes	n/a
		Treatment Room (with prep area)	2	16.0	Treatment Room	X0105-01	28	18	Radiant Panels	Remote Sensor Adj.	Yes	Comfort Cooled Fresh Air	Central Supply Air	10	0	Positive	F7	43	41		500	n/a	1000	A	90	Switch	Bed / Trolley 1.45m	See Guidance Notes	n/a
		Clean Utility	1	8.0	Clean Utility	T0101	28	18	Radiant Panels	Remote Sensor Adj.	Yes	Comfort Cooled Fresh Air	Central Supply Air	6	0	Positive	G4	43	41		150	n/a	None	A	80	Presence detection	General working plane 1m	See Guidance Notes	n/a
		Dirty Utility	1	11.0	Dirty utility	Y0431	28	18	Adjacent Space Transfer Air	None	No	None	Central Dirty Extract	0	6	Negative	None	43	41		200	n/a	None	A	80	Presence detection	Floor 0m	See Guidance Notes	n/a
		DSR	1	7.0	DSR	Y1510	28	18	Adjacent Space Transfer Air	None	No	None	Central Dirty Extract	0	6	Negative	None	43	60		100	n/a	None	A	90	Presence detection	Floor 0m	See Guidance Notes	n/a
		Disposal Hold	1	10.0	Disposal Hold	Y0646	28	18	Adjacent Space Transfer Air	None	No	None	Central Dirty Extract	0	10	Negative	None	43	n/a		100	n/a	None	A	90	Presence detection	Floor 0m	See Guidance Notes	n/a
		Resuscitation Trolley Bay	1	1.0	Circulation Equipment Storage Bays	G0180-01	28	16	Adjacent Space Transfer Air	None	No	None	Central General Extract	0	3	Negative	None	43	n/a		200	n/a	None	A	80	Presence detection	Floor 0m	See Guidance Notes	n/a
		Phlebotomy Room	1	8.0	Consulting Room	C0224-??	28	18	Radiant Panels	Remote Sensor Adj.	Yes	Comfort Cooled Fresh Air	Central Supply and Extract	3	3	Balanced	G4	43	41		300	n/a	1000	A	80	Switch	Bed / Trolley 1.45m	See Guidance Notes	1
		Linen Bay (1 Trolley)	1	1.5	Linen Bay	W1594-01	28	16	Adjacent Space Transfer Air	None	No	None	Central Extract	0	3	Negative	None	43	n/a		200	n/a	None	A	80	Presence detection	Floor 0m	See Guidance Notes	n/a
		Staff WC	1	3.0	Toilet	V1010	28	18	Adjacent Space Transfer Air	None	No	None	Central Dirty Extract	0	10	Negative	None	43	41		200	n/a	None	A	80	Presence detection	Floor 0m	See Guidance Notes	n/a
		Baby Infant / Feeding Room	1	4.0	Baby Feeding	S0012	25	18	Radiant Panels	Remote Sensor Adj.	No	None	Central Supply Air	5	0	Positive	G4	43	41		100	n/a	None	A	80	Presence detection	Floor 0m	See Guidance Notes	n/a
		Nappy Change	1	4.0	Nappy Change	V1131	25	18	Radiant Panels	Remote Sensor Adj.	No	None	Central Dirty Extract	0	10	Negative	None	43	41		100	n/a	None	A	80	Presence detection	Floor 0m	See Guidance Notes	n/a
		Outpatients Management Office	1	9.0	Cellular / Ward Offices	M0251	25	18	Radiant Panels	Remote Sensor Adj.	Yes	Comfort Cooled Fresh Air	Central Supply and Extract	4	4	Balanced	G4	43	n/a		300	n/a	None	A	80	Switch	Desk 0.75 to 0.85m	See Guidance Notes	n/a
		Meeting Room	1	15.0	Meeting Room	H1313-03	25	18	Radiant Panels	Remote Sensor Adj.	Yes	Ceiling Cassette - Chilled Water	Central Supply and Extract	10 l/s per person	10 l/s per person	Balanced	G4	43	n/a		300	n/a	None	A	80	Switch	Desk 0.75 to 0.85m	See Guidance Notes	n/a
D2	Cardiology & Respiratory	Waiting Area	1	9.0	Waiting Room	J0132-02	28	18	Radiant Panels	Remote Sensor Adj.	Yes	Comfort Cooled Fresh Air	Central Supply and Extract	5	5	Balanced	G4	43	n/a		300	n/a	None	A	80	Switch	Floor 0m	See Guidance Notes	n/a
		Store/ Equipment	1	9.0	Storage Area Equipment	W1585	28	16	Radiant Panels	Remote Sensor Adj.	No	None	Central General Extract	0	3	Negative	None	43	n/a		200	n/a	None	A	80	Presence detection	Floor 0m	See Guidance Notes	n/a
		WC Staff	1	4.5	Toilet	V1010-03	28	18	Adjacent Space Transfer Air	None	No	None	Central Dirty Extract	0	10	Negative	None	43	41		200	n/a	None	A	80	Presence detection	Floor 0m	See Guidance Notes	n/a
		DSR	1	7.0	DSR	Y1510	28	18	Adjacent Space Transfer Air	None	No	None	Central Dirty Extract	0	6	Negative	None	43	60		100	n/a	None	A	90	Presence detection	Floor 0m	See Guidance Notes	n/a
		Physical Measurement	1	3.5	Consulting Room	C0522-02	28	18	Radiant Panels	Remote Sensor Adj.	Yes	Comfort Cooled Fresh Air	Central Supply and Extract	3	3	Balanced	G4	43	41		300	n/a	1000	A	80	Switch	Bed / Trolley 1.45m	See Guidance Notes	1
		ECG Procedure Room	1	12.0	Consulting Room	C0718-??	28	18	Radiant Panels	Remote Sensor Adj.	Yes	Comfort Cooled Fresh Air	Central Supply and Extract	3	3	Balanced	G4	43	41		300	n/a	1000	A	80	Switch	Bed / Trolley 1.45m	See Guidance Notes	1
		Echocardiography Room	1	20.0	Diagnostic room	C0712	25	18	Warm Air - Reheat Battery	BMS Adjustable Sensor	Yes	Comfort Cooled	Central Supply and Extract	to suit location	to suit location	Balanced	F7	43	41		300	n/a	1000	A	80	Switch / Dimmer	General working plane 1m	See Guidance Notes	1
		Exercise Tolerance Test Room	1	20.0	Consulting Room	C0718-01	28	18	Radiant Panels	Remote Sensor Adj.	Yes	Comfort Cooled Fresh Air	Central Supply and Extract	3	3	Balanced	G4	43	41		300	n/a	1000	A	80	Switch	Bed / Trolley 1.45m	See Guidance Notes	1
		Admin Office	1	12.0	Cellular / Ward Offices	M0251	25	18	Radiant Panels	Remote Sensor Adj.	Yes	Comfort Cooled Fresh Air	Central Supply and Extract	4	4	Balanced	G4	43	n/a		300	n/a	None	A	80	Switch	Desk 0.75 to 0.85m	See Guidance Notes	n/a
		Lung Function Laboratory	1	28.0	Treatment Room	C0718-02	28	18	Radiant Panels	Remote Sensor Adj.	Yes	Comfort Cooled Fresh Air	Central Supply Air	10	0	Positive	F7	43	41		500	n/a	1000	A	90	Switch	Bed / Trolley 1.45m	See Guidance Notes	n/a
		Exercise Room/Lung Function Laboratory	1	22.0	Treatment Room	C0715	28	18	Radiant Panels	Remote Sensor Adj.	Yes	Comfort Cooled Fresh Air	Central Supply Air	10	0	Positive	F7	43	41		500	n/a	1000	A	90	Switch	Bed / Trolley 1.45m	See Guidance Notes	n/a
		Admin Office	1	15.0	Cellular / Ward Offices	M0251	25	18	Radiant Panels	Remote Sensor Adj.	Yes	Comfort Cooled Fresh Air	Central Supply and Extract	4	4	Balanced	G4	43	n/a		300	n/a	None	A	80	Switch	Desk 0.75 to 0.85m	See Guidance Notes	n/a
		Domiciliary Sleep Studies	1	12.0	Consulting Room	C0224-03	28	18	Radiant Panels	Remote Sensor Adj.	Yes	Comfort Cooled Fresh Air	Central Supply and Extract	3	3	Balanced	G4	43	41		300	n/a	1000	A	80	Switch	Bed / Trolley 1.45m	See Guidance Notes	1
D3	Orthoptics	Staff Office	1	12.0	Cellular / Ward Offices	M0251	25	18	Radiant Panels	Remote Sensor Adj.	Yes	Comfort Cooled Fresh Air	Central Supply and Extract	4	4	Balanced	G4	43	n/a		300	n/a	None	A	80	Switch	Desk 0.75 to 0.85m	See Guidance Notes	n/a
		Parking Bay: pushchairs	1	2.0	Circulation Equipment Storage Bays	G0180-06	28	16	Adjacent Space Transfer Air	None	No	None	Central General Extract	0	3	Negative	None	43	n/a		300	n/a	None	A	80	Switch	Desk 0.75 to 0.85m	See Guidance Notes	n/a
		WC & handwash: specimen; wheelchair	1	4.5	Toilet	V0922	28	18	Adjacent Space Transfer Air	None	No	None	Central Dirty Extract	0	10	Negative	None	43	41		200	n/a	None	A	80	Presence detection	Floor 0m	See Guidance Notes	n/a
		Examination Room: Fields test	1	16.0	Consulting Room	C0143	28	18	Radiant Panels	Remote Sensor Adj.	Yes	Comfort Cooled Fresh Air	Central Supply and Extract	3	3	Balanced	G4	43	41		300	n/a	1000	A	80	Switch	Bed / Trolley 1.45m	See Guidance Notes	1
		C/E Orthoptic (6 metre room)	4	15.5	Consulting Room	C0230	28	18	Radiant Panels	Remote Sensor Adj.	Yes	Comfort Cooled Fresh Air	Central Supply and Extract	3	3	Balanced	G4	43	41		300	n/a	1000	A	80	Switch	Bed / Trolley 1.45m	See Guidance Notes	1
		DSR	1	7.0	DSR	Y1510	28	18	Adjacent Space Transfer Air	None	No	None	Central Dirty Extract	0	6	Negative	None	43	60		100	n/a	None	A	90	Presence detection	Floor 0m	See Guidance Notes	n/a
		Waiting Area	1	13.5	Waiting Room	J0132-02	28	18	Radiant Panels	Remote Sensor Adj.	Yes	Comfort Cooled Fresh Air	Central Supply and Extract	5	5	Balanced	G4	43	n/a		300	n/a	None	A	80	Switch	Floor 0m	See Guidance Notes	n/a
		Waiting Area	1	3.5	Waiting Room	J0132-02	28	18	Radiant Panels	Remote Sensor Adj.	Yes	Comfort Cooled Fresh Air	Central Supply and Extract	5	5	Balanced	G4	43	n/a		300	n/a	None	A	80	Switch	Floor 0m	See Guidance Notes	n/a

RHSC / DCN Environmental Matrix

Dept	Dept	Room Name	Qty		Room Function	ADB Code	Temp (max)	Temp (min)	Heating Type	Heating Control	Cooling (present)	Cooling (type)	Ventilation (type)	Supply (ac/hr)	Extract (ac/hr)	Relative pressure	Min filtration	Surface temp	Water temp	Safety Notes	Normal lux	Night lux	Local lux	Standby grade	Colour render	Control	Plane	Medical Location	
D4	Audiology	Testing/Clinic Rooms	2	21.0	Consulting Room	C0515	28	18	Radiant Panels	Remote Sensor Adj.	Yes	Comfort Cooled Fresh Air	Central Supply and Extract	3	3	Balanced	G4	43	41		300	n/a	1000	A	80	Switch	Bed / Trolley 1.45m	See Guidance Notes	1
		Obs/Control	2	8.0	Diagnostic room	C0516	25	18	Warm Air - Reheat Battery	BMS Adjustable Sensor	Yes	Comfort Cooled	Central Supply and Extract	to suit location	to suit location	Balanced	F7	43	41		300	n/a	1000	A	80	Switch / Dimmer	General working plane 1m	See Guidance Notes	1
		ABR Room	1	16.0	Treatment Room	C0517	28	18	Radiant Panels	Remote Sensor Adj.	Yes	Comfort Cooled Fresh Air	Central Supply Air	10	0	Positive	F7	43	41		500	n/a	1000	A	90	Switch	Bed / Trolley 1.45m	See Guidance Notes	n/a
		Test Room	1	16.0	Treatment Room	C0517-01	28	18	Radiant Panels	Remote Sensor Adj.	Yes	Comfort Cooled Fresh Air	Central Supply Air	10	0	Positive	F7	43	41		500	n/a	1000	A	90	Switch	Bed / Trolley 1.45m	See Guidance Notes	n/a
		Work Room	1	12.0	Small Workshop	L1804	28	18	Radiant Panels	Remote Sensor Adj.	Yes	Comfort Cooled Fresh Air	Central Supply and Extract	4	6	Negative	G4	43	41		300	n/a	None	A	80	Switch	Desk 0.75 to 0.85m	See Guidance Notes	n/a
		Mould Room	1	9.0	Small Workshop	L1804	28	18	Radiant Panels	Remote Sensor Adj.	Yes	Comfort Cooled Fresh Air	Central Supply and Extract	4	6	Negative	G4	43	41		300	n/a	None	A	80	Switch	Desk 0.75 to 0.85m	See Guidance Notes	n/a
		Store	1	15.0	Storage Area Equipment	W1585	28	16	Radiant Panels	Remote Sensor Adj.	No	None	Central General Extract	0	3	Negative	None	43	n/a		200	n/a	None	A	80	Presence detection	Floor 0m	See Guidance Notes	n/a
		Shared Staff Office	1	32.8	Cellular / Ward Offices	M0251	25	18	Radiant Panels	Remote Sensor Adj.	Yes	Comfort Cooled Fresh Air	Central Supply and Extract	4	4	Balanced	G4	43	n/a		300	n/a	None	A	80	Switch	Desk 0.75 to 0.85m	See Guidance Notes	n/a
D5	Paediatric Dentistry	Surgeries (standard)	3	18.0	Operating Theatre Suite	C0903	25	18	warm air via AHU Battery	Local / BMS Adjustable Sensor	Yes	Comfort Cooled Fresh Air	Central Supply and Extract	In line with SHTM 03-01	In line with SHTM 03-01		F7	43	41		500	n/a	10,000 - 100,000	A	80	Switch	Bed / Trolley 1.45m	See Guidance Notes	n/a
		Surgery (multi-disciplinary)	1	20.0	Operating Theatre Suite	N0106-01	25	18	warm air via AHU Battery	Local / BMS Adjustable Sensor	Yes	Comfort Cooled Fresh Air	Central Supply and Extract	In line with SHTM 03-01	In line with SHTM 03-01		F7	43	41		500	n/a	10,000 - 100,000	A	80	Switch	Bed / Trolley 1.45m	See Guidance Notes	n/a
		Recovery	1	10.0	Recovery Bay / Recovery Room	C0522-04	28	20	Radiant Panels	Remote Sensor Adj.	Yes	Comfort Cooled Fresh Air	Central Supply and Extract	15	15	Balanced	G4	43	41		500	n/a	1000	A	80	Switch / Dimmer	Bed / Trolley 1.45m	See Guidance Notes	n/a
		Laboratory	1	10.0	Laboratory	L1804	25	18	Radiant Panels	Remote Sensor Adj.	Yes	Ceiling Cassette - Chilled Water	Central Supply and Extract	6	6	Balanced	F7	43	60		500	n/a	None	A	80	Switch	Desk 0.75 to 0.85m	See Guidance Notes	n/a
		Clean Utility / Dental Store	1	23.0	Clean Utility	T0101	28	18	Radiant Panels	Remote Sensor Adj.	Yes	Comfort Cooled Fresh Air	Central Supply Air	6	0	Positive	G4	43	41		150	n/a	None	A	80	Presence detection	General working plane 1m	See Guidance Notes	n/a
		Dirty Utility	1	11.0	Dirty utility	Y0431	28	18	Adjacent Space Transfer Air	None	No	None	Central Dirty Extract	0	6	Negative	None	43	41		200	n/a	None	A	80	Presence detection	Floor 0m	See Guidance Notes	n/a
		Mobile Inter-oral Storage	1	6.0	Storage Area Equipment	W1585-??	28	16	Radiant Panels	Remote Sensor Adj.	No	None	Central General Extract	0	3	Negative	None	43	n/a		200	n/a	None	A	80	Presence detection	Floor 0m	See Guidance Notes	n/a
D6	RHSC Therapies	Rehabilitation Room	4	30.0	Treatment Room	X0208-01	28	18	Radiant Panels	Remote Sensor Adj.	Yes	Comfort Cooled Fresh Air	Central Supply Air	10	0	Positive	F7	43	41		500	n/a	1000	A	90	Switch	Bed / Trolley 1.45m	See Guidance Notes	n/a
		Rehabilitation Room (inc CV equip)	1	39.0	Treatment Room	X0208-02	28	18	Radiant Panels	Remote Sensor Adj.	Yes	Comfort Cooled Fresh Air	Central Supply Air	10	0	Positive	F7	43	41		500	n/a	1000	A	90	Switch	Bed / Trolley 1.45m	See Guidance Notes	n/a
		Changing Cubicles	2	4.0	Changing Facilities	V0726	28	18	Radiant Panels	Remote Sensor Adj.	Yes	Comfort Cooled Fresh Air	Central Supply and Extract	6	10	positive to wc	G4	43	41		100	n/a	None	A	80	Presence detection	Floor 0m	See Guidance Notes	n/a
		Standard Treatment Room	3	15.0	Treatment Room	X0105	28	18	Radiant Panels	Remote Sensor Adj.	Yes	Comfort Cooled Fresh Air	Central Supply Air	10	0	Positive	F7	43	41		500	n/a	1000	A	90	Switch	Bed / Trolley 1.45m	See Guidance Notes	n/a
		Treatment Room (OT equip)	1	20.0	Treatment Room	X0105	28	18	Radiant Panels	Remote Sensor Adj.	Yes	Comfort Cooled Fresh Air	Central Supply Air	10	0	Positive	F7	43	41		500	n/a	1000	A	90	Switch	Bed / Trolley 1.45m	See Guidance Notes	n/a
		Infant Measuring Room	1	6.0	Consulting Room	C0522-02	28	18	Radiant Panels	Remote Sensor Adj.	Yes	Comfort Cooled Fresh Air	Central Supply and Extract	3	3	Balanced	G4	43	41		300	n/a	1000	A	80	Switch	Bed / Trolley 1.45m	See Guidance Notes	1
		Standard Distraction Free Treatment Room	2	15.0	Consulting Room	C0110-01	28	18	Radiant Panels	Remote Sensor Adj.	Yes	Comfort Cooled Fresh Air	Central Supply and Extract	3	3	Balanced	G4	43	41		300	n/a	1000	A	80	Switch	Bed / Trolley 1.45m	See Guidance Notes	1
		Large Distraction Free Treatment Room	1	20.0	Consulting Room	C0110-01	28	18	Radiant Panels	Remote Sensor Adj.	Yes	Comfort Cooled Fresh Air	Central Supply and Extract	3	3	Balanced	G4	43	41		300	n/a	1000	A	80	Switch	Bed / Trolley 1.45m	See Guidance Notes	1
		Dietetic Clinic Room	2	12.0	Diagnostic room	C0224-02	25	18	Warm Air - Reheat Battery	BMS Adjustable Sensor	Yes	Comfort Cooled	Central Supply and Extract	to suit location	to suit location	Balanced	F7	43	41		300	n/a	1000	A	80	Switch / Dimmer	General working plane 1m	See Guidance Notes	1
		Splinting / Casting Room	1	18.0	Consulting Room	X0206-01	28	18	Radiant Panels	Remote Sensor Adj.	Yes	Comfort Cooled Fresh Air	Central Supply and Extract	3	3	Balanced	G4	43	41		300	n/a	1000	A	80	Switch	Bed / Trolley 1.45m	See Guidance Notes	1
		management office	1	20.5	Cellular / Ward Offices	M0251	25	18	Radiant Panels	Remote Sensor Adj.	Yes	Comfort Cooled Fresh Air	Central Supply and Extract	4	4	Balanced	G4	43	n/a		300	n/a	None	A	80	Switch	Desk 0.75 to 0.85m	See Guidance Notes	n/a
		Staff Office - All specialties (39 person)	1	159.0	Open Plan Office	M0132-01	25	18	Radiant Panels	Remote Sensor Adj.	Yes	Comfort Cooled Fresh Air	Central Supply and Extract	4	4	Balanced	G4	43	n/a		300	n/a	None	A	80	Switch	Desk 0.75 to 0.85m	See Guidance Notes	n/a
		Meeting Room - 4 person	1	6.0	Meeting Room	H1313-01	25	18	Radiant Panels	Remote Sensor Adj.	Yes	Ceiling Cassette - Chilled Water	Central Supply and Extract	10 l/s per person	10 l/s per person	Balanced	G4	43	n/a		300	n/a	None	A	80	Switch	Desk 0.75 to 0.85m	See Guidance Notes	n/a
		Meeting Room - 6 person	1	9.0	Meeting Room	H1313-02	25	18	Radiant Panels	Remote Sensor Adj.	Yes	Ceiling Cassette - Chilled Water	Central Supply and Extract	10 l/s per person	10 l/s per person	Balanced	G4	43	n/a		300	n/a	None	A	80	Switch	Desk 0.75 to 0.85m	See Guidance Notes	n/a
		Dictation/ 1:1/Phone Booth	1	4.2	Cellular / Ward Offices	M0251-01	25	18	Radiant Panels	Remote Sensor Adj.	Yes	Comfort Cooled Fresh Air	Central Supply and Extract	4	4	Balanced	G4	43	n/a		300	n/a	None	A	80	Switch	Desk 0.75 to 0.85m	See Guidance Notes	n/a
		A&C Staff Office/Appliance Officer	1	12.0	Cellular / Ward Offices	M0251	25	18	Radiant Panels	Remote Sensor Adj.	Yes	Comfort Cooled Fresh Air	Central Supply and Extract	4	4	Balanced	G4	43	n/a		300	n/a	None	A	80	Switch	Desk 0.75 to 0.85m	See Guidance Notes	n/a
		WC - Staff	2	3.0	Toilet	V1010	28	18	Adjacent Space Transfer Air	None	No	None	Central Dirty Extract	0	10	Negative	None	43	41		200	n/a	None	A	80	Presence detection	Floor 0m	See Guidance Notes	n/a
		Reception	1	6.0	Reception	J0132-01	28	18	Radiant Panels	Remote Sensor Adj.	Yes	Comfort Cooled Fresh Air	Central Supply Air	4	4	Balanced	G4	43	n/a		300	n/a	None	A	80	Switch	Desk 0.75 to 0.85m	See Guidance Notes	n/a
		Waiting Play Area	1	33.0	Waiting Room	J0132-02	28	18	Radiant Panels	Remote Sensor Adj.	Yes	Comfort Cooled Fresh Air	Central Supply and Extract	5	5	Balanced	G4	43	n/a		300	n/a	None	A	80	Switch	Floor 0m	See Guidance Notes	n/a
		WC - Wheelchair accessible	1	4.5	Toilet	V0922	28	18	Adjacent Space Transfer Air	None	No	None	Central Dirty Extract	0	10	Negative	None	43	41		200	n/a	None	A	80	Presence detection	Floor 0m	See Guidance Notes	n/a
		WC - assisted (large+changing)	1	12.3	Toilet	V0922-01	28	18	Adjacent Space Transfer Air	None	No	None	Central Dirty Extract	0	10	Negative	None	43	41		200	n/a	None	A	80	Presence detection	Floor 0m	See Guidance Notes	n/a
		Store - OT	1	4.0	Storage Area Equipment	W1585-??	28	16	Radiant Panels	Remote Sensor Adj.	No	None	Central General Extract	0	3	Negative	None	43	n/a		200	n/a	None	A	80	Presence detection	Floor 0m	See Guidance Notes	n/a
		Store - OT	1	16.5	Storage Area Equipment	W1585-??	28	16	Radiant Panels	Remote Sensor Adj.	No	None	Central General Extract	0	3	Negative	None	43	n/a		200	n/a	None	A	80	Presence detection	Floor 0m	See Guidance Notes	n/a
		Store - OT	1	2.0	Storage Area Equipment	W1585-??	28	16	Radiant Panels	Remote Sensor Adj.	No	None	Central General Extract	0	3	Negative	None	43	n/a		200	n/a	None	A	80	Presence detection	Floor 0m	See Guidance Notes	n/a
		Store - SALT	1	8.0	Storage Area Equipment	W1585-??	28	16	Radiant Panels	Remote Sensor Adj.	No	None	Central General Extract	0	3	Negative	None	43	n/a		200	n/a	None	A	80	Presence detection	Floor 0m	See Guidance Notes	n/a
		Store - Dietetic	1	8.0	Storage Area Equipment	W1585-??	28	16	Radiant Panels	Remote Sensor Adj.	No	None	Central General Extract	0	3	Negative	None	43	n/a		200	n/a	None	A	80	Presence detection	Floor 0m	See Guidance Notes	n/a
		Store - Dietetic	1	1.0	Storage Area Equipment	W1585-??	28	16	Radiant Panels	Remote Sensor Adj.	No	None	Central General Extract	0	3	Negative	None	43	n/a		200	n/a	None	A	80	Presence detection	Floor 0m	See Guidance Notes	n/a
		Store - Dietetic	1	1.5	Storage Area Equipment	W1585-??	28	16	Radiant Panels	Remote Sensor Adj.	No	None	Central General Extract	0	3	Negative	None	43	n/a		200	n/a	None	A	80	Presence detection	Floor 0m	See Guidance Notes	n/a
		Store - Physio	1	4.0	Storage Area Equipment	W1585-??	28	16	Radiant Panels	Remote Sensor Adj.	No	None	Central General Extract	0	3	Negative	None	43	n/a		200	n/a	None	A	80	Presence detection	Floor 0m	See Guidance Notes	n/a
		Store - Physio	1	8.0	Storage Area Equipment	W1585-??	28	16	Radiant Panels	Remote Sensor Adj.	No	None	Central General Extract	0	3	Negative	None	43	n/a		200	n/a	None	A	80	Presence detection	Floor 0m	See Guidance Notes	n/a
		Store - Physio	1	24.5	Storage Area Equipment	W1585-??	28	16	Radiant Panels	Remote Sensor Adj.	No	None	Central General Extract	0	3	Negative	None	43	n/a		200	n/a	None	A	80	Presence detection	Floor 0m	See Guidance Notes	n/a
		Store - Physio	1	8.5	Storage Area Equipment	W1585-??	28	16	Radiant Panels	Remote Sensor Adj.	No	None	Central General Extract	0	3	Negative	None	43	n/a		200	n/a	None	A	80	Presence detection	Floor 0m	See Guidance Notes	n/a
		Store - Physio	1	6.0	Storage Area Equipment	W1585-??	28	16	Radiant Panels	Remote Sensor Adj.	No	None	Central General Extract	0	3	Negative	None	43	n/a		200	n/a	None	A	80	Presence detection	Floor 0m	See Guidance Notes	n/a
		Store - Physio	1	3.5	Storage Area Equipment	W1585-??	28	16	Radiant Panels	Remote Sensor Adj.	No	None	Central General Extract	0	3	Negative	None	43	n/a		200	n/a	None	A	80	Presence detection	Floor 0m	See Guidance Notes	n/a
		Store - Physio	1	13.5	Storage Area Equipment	W1585-??	28	16	Radiant Panels	Remote Sensor Adj.	No	None	Central General Extract	0	3	Negative	None	43	n/a		200	n/a	None	A	80	Presence detection	Floor 0m	See Guidance Notes	n/a
		Store - TIP	1	4.5	Storage Area Equipment	W1585-??	28	16	Radiant Panels	Remote Sensor Adj.	No	None	Central General Extract	0	3	Negative	None	43	n/a		200	n/a	None	A	80	Presence detection	Floor 0m	See Guidance Notes	n/a
		Equipment Decontamination	1	10.0	Equipment Decontamination	Y0335	28	18	Radiant Panels	Remote Sensor Adj.	Yes	Comfort Cooled Fresh Air	Central Supply and Extract	7	10	Negative	G4	43	41		200	n/a	None	A	80	Presence detection	General working plane 1m	See Guidance Notes	n/a
		Pantry	1	8.0	Pantry	P0627	28	18	Radiant Panels	Remote Sensor Adj.	Yes	Comfort Cooled Fresh Air	Central Supply and Extract	6	8	Negative	G4	43	41		300	n/a	None	A	80	Switch	Floor 0m	See Guidance Notes	n/a
		Linen Bay	1	1.5	Linen Bay	W1594-01	28	16	Adjacent Space Transfer Air	None	No	None	Central Extract	0	3	Negative	None	43	n/a		200	n/a	None	A	80	Presence detection	Floor 0m	See Guidance Notes	n/a
		WC - Staff	1	3.0	Toilet	V1010	28	18	Adjacent Space Transfer Air	None	No	None	Central Dirty Extract	0	10	Negative	None	43	41		200	n/a	None	A	80	Presence detection	Floor 0m	See Guidance Notes	n/a
		DSR	1	7.0	DSR	Y1510	28	18	Adjacent Space Transfer Air	None	No	None	Central Dirty Extract	0	6	Negative	None	43	60		100	n/a	None	A	90	Presence detection	Floor 0m	See Guidance Notes	n/a
		Disposal Hold	1	10.0	Disposal Hold	Y0646	28	18	Adjacent Space Transfer Air	None	No	None	Central Dirty Extract	0	10	Negative	None	43	n/a		100	n/a	None	A	90	Presence detection	Floor 0m	See Guidance Notes	n/a
		Dressings / DopplerStore	1	4.0	Storage Area Equipment	W1585-??	28	16	Radiant Panels	Remote Sensor Adj.	No	None	Central General Extract	0	3	Negative	None	43	n/a		200	n/a	None	A	80	Presence detection	Floor 0m	See Guidance Notes	n/a

RHSC / DCN Environmental Matrix

Dept	Dept	Room Name	Qty		Room Function	ADB Code	Temp (max)	Temp (min)	Heating Type	Heating Control	Cooling (present)	Cooling (type)	Ventilation (type)	Supply (ac/hr)	Extract (ac/hr)	Relative pressure	Min filtration	Surface temp	Water temp	Safety Notes	Normal lux	Night lux	Local lux	Standby grade	Colour render	Control	Plane	Medical Location	
D7	Plastics Dressings Clinic	Sluice	1	6.0	Dirty utility	Y0431	28	18	Adjacent Space Transfer Air	None	No	None	Central Dirty Extract	0	6	Negative	None	43	41		200	n/a	None	A	80	Presence detection	Floor 0m	See Guidance Notes	n/a
		Single Telephone Booth	1	4.0	Circulation Areas	G0710	28	18	underfloor heating / none to suit location	BMS Adjustable Sensor	No	None	to suit location	to suit location	to suit location	Balanced	G4	43	41		200	n/a	None	A	80	presence detection	Floor 0m	See Guidance Notes	n/a
		Dressings Room (Burns)	2	16.0	Consulting Room	X0242	28	18	Radiant Panels	Remote Sensor Adj.	Yes	Comfort Cooled Fresh Air	Central Supply and Extract	3	3	Balanced	G4	43	41		300	n/a	1000	A	80	Switch	Bed / Trolley 1.45m	See Guidance Notes	1
		Assisted Bathroom	1	14.0	Bathroom	V1736	28	20	Adjacent Space Transfer Air	None	No	None	Central Dirty Extract	0	10	Negative	None	43	41		200	n/a	None	A	80	Presence detection	Floor 0m	See Guidance Notes	n/a
D8	Social Work	Open Plan Area	1	45.1	Waiting Room	J0132-02	28	18	Radiant Panels	Remote Sensor Adj.	Yes	Comfort Cooled Fresh Air	Central Supply and Extract	5	5	Balanced	G4	43	n/a		300	n/a	None	A	80	Switch	Floor 0m	See Guidance Notes	n/a
		Interview Room	1	9.0	Meeting Room	M0724	25	18	Radiant Panels	Remote Sensor Adj.	Yes	Ceiling Cassette - Chilled Water	Central Supply and Extract	10 l/s per person	10 l/s per person	Balanced	G4	43	n/a		300	n/a	None	A	80	Switch	Desk 0.75 to 0.85m	See Guidance Notes	n/a
D9	Medical Day Care Unit - 5 Beds	Reception: 2 staff	1	3.0	Reception	J0132-01	28	18	Radiant Panels	Remote Sensor Adj.	Yes	Comfort Cooled Fresh Air	Central Supply Air	4	4	Balanced	G4	43	n/a		300	n/a	None	A	80	Switch	Desk 0.75 to 0.85m	See Guidance Notes	n/a
		Office and Storage 2 staff	1	12.0	Cellular / Ward Offices	M0251	25	18	Radiant Panels	Remote Sensor Adj.	Yes	Comfort Cooled Fresh Air	Central Supply and Extract	4	4	Balanced	G4	43	n/a		300	n/a	None	A	80	Switch	Desk 0.75 to 0.85m	See Guidance Notes	n/a
		Waiting Area	1	12.0	Waiting Room	J0132-02	28	18	Radiant Panels	Remote Sensor Adj.	Yes	Comfort Cooled Fresh Air	Central Supply and Extract	5	5	Balanced	G4	43	n/a		300	n/a	None	A	80	Switch	Floor 0m	See Guidance Notes	n/a
		Waiting Play Area	1	20.0	Waiting Room	J0132-02	28	18	Radiant Panels	Remote Sensor Adj.	Yes	Comfort Cooled Fresh Air	Central Supply and Extract	5	5	Balanced	G4	43	n/a		300	n/a	None	A	80	Switch	Floor 0m	See Guidance Notes	n/a
		WC - Wheelchair accessible	1	4.5	Toilet	V0922	28	18	Adjacent Space Transfer Air	None	No	None	Central Dirty Extract	0	10	Negative	None	43	41		200	n/a	None	A	80	Presence detection	Floor 0m	See Guidance Notes	n/a
		Touchdown Base	1	2.0	staff base	T0151	28	18	Radiant Panels	Remote Sensor Adj.	No	None	Central Supply and Extract	10l/s/per person	10l/s/per person	Balanced	G4	n/a	n/a		200/300	n/a	None	A	80	Switch / Dimmer	Desk 0.75 to 0.85m	See Guidance Notes	n/a
		Multi Bed Room: day care, 3 beds	1	40.5	Multi-bed Wards	B0405-01	25	18	Radiant Panels	Remote Sensor Adj.	Yes	Comfort Cooled Fresh Air	Natural and Central Supply Air	4	via ensuite	positive to ensuite	G4	43	41		100	5	300	A	80	switch / dimmer	Bed / Trolley 1.45m	See Guidance Notes	n/a
		WC - Wheelchair accessible	1	4.5	Toilet	V0922	28	18	Adjacent Space Transfer Air	None	No	None	Central Dirty Extract	0	10	Negative	None	43	41		200	n/a	None	A	80	Presence detection	Floor 0m	See Guidance Notes	n/a
		Single Bedroom	2	17.0	Bedroom	B0305	25	18	Radiant Panels	Remote Sensor Adj.	Yes	Comfort Cooled Fresh Air	Natural & Central Supply Air	4	via ensuite	Balanced	G4	43	41		100	5	300	A	80	Switch / Dimmer	Bed / Trolley 1.45m	See Guidance Notes	1
		En Suite WC / WHB	2	4.5	Toilet	V1010	28	18	Adjacent Space Transfer Air	None	No	None	Central Dirty Extract	0	10	Negative	None	43	41		200	n/a	None	A	80	Presence detection	Floor 0m	See Guidance Notes	n/a
		Patient Treatment Lounge	1	32.4	Treatment Room	X1504	28	18	Radiant Panels	Remote Sensor Adj.	Yes	Comfort Cooled Fresh Air	Central Supply Air	10	0	Positive	F7	43	41		500	n/a	1000	A	90	Switch	Bed / Trolley 1.45m	See Guidance Notes	n/a
		Consult/Examination	1	15.5	Consulting Room	C0224	28	18	Radiant Panels	Remote Sensor Adj.	Yes	Comfort Cooled Fresh Air	Central Supply and Extract	3	3	Balanced	G4	43	41		300	n/a	1000	A	80	Switch	Bed / Trolley 1.45m	See Guidance Notes	1
		Treatment Room	1	16.0	Treatment Room	X0105	28	18	Radiant Panels	Remote Sensor Adj.	Yes	Comfort Cooled Fresh Air	Central Supply Air	10	0	Positive	F7	43	41		500	n/a	1000	A	90	Switch	Bed / Trolley 1.45m	See Guidance Notes	n/a
		Parking Bay: 1 patient trolley/whch	1	5.0	Circulation Equipment Storage Bays	G0180-03	28	16	Adjacent Space Transfer Air	None	No	None	Central General Extract	0	3	Negative	None	43	n/a		200	n/a	None	A	80	Presence detection	Floor 0m	See Guidance Notes	n/a
		Interview, Counselling & Quiet Room	1	9.0	Meeting Room	M0724	25	18	Radiant Panels	Remote Sensor Adj.	Yes	Ceiling Cassette - Chilled Water	Central Supply and Extract	10 l/s per person	10 l/s per person	Balanced	G4	43	n/a		300	n/a	None	A	80	Switch	Desk 0.75 to 0.85m	See Guidance Notes	n/a
		WC - Staff	1	3.0	Toilet	V1010	28	18	Adjacent Space Transfer Air	None	No	None	Central Dirty Extract	0	10	Negative	None	43	41		200	n/a	None	A	80	Presence detection	Floor 0m	See Guidance Notes	n/a
		Pantry	1	8.0	Pantry	P0627	28	18	Radiant Panels	Remote Sensor Adj.	Yes	Comfort Cooled Fresh Air	Central Supply and Extract	6	8	Negative	G4	43	41		300	n/a	None	A	80	Switch	Floor 0m	See Guidance Notes	n/a
		Ward Management Office	1	9.0	Cellular / Ward Offices	M0251	25	18	Radiant Panels	Remote Sensor Adj.	Yes	Comfort Cooled Fresh Air	Central Supply and Extract	4	4	Balanced	G4	43	n/a		300	n/a	None	A	80	Switch	Desk 0.75 to 0.85m	See Guidance Notes	n/a
		Resuscitation Trolley Bay	1	1.0	Resus Trolley bay	G0180-01	28	18	Adjacent Space Transfer Air	None	No	None	None	0	0	n/a	None	43	n/a		500	n/a	None	A	90	Switch	Bed / Trolley 1.45m	See Guidance Notes	n/a
		Clean Utility	1	12.0	Clean Utility	T0101	28	18	Radiant Panels	Remote Sensor Adj.	Yes	Comfort Cooled Fresh Air	Central Supply Air	6	0	Positive	G4	43	41		150	n/a	None	A	80	Presence detection	General working plane 1m	See Guidance Notes	n/a
		Dirty Utility	1	11.0	Dirty utility	Y0431	28	18	Adjacent Space Transfer Air	None	No	None	Central Dirty Extract	0	6	Negative	None	43	41		200	n/a	None	A	80	Presence detection	Floor 0m	See Guidance Notes	n/a
		Store - General	1	8.0	Storage Area Equipment	W1585	28	16	Radiant Panels	Remote Sensor Adj.	No	None	Central General Extract	0	3	Negative	None	43	n/a		200	n/a	None	A	80	Presence detection	Floor 0m	See Guidance Notes	n/a
		Linen Bay	1	1.5	Linen Bay	W1594-01	28	16	Adjacent Space Transfer Air	None	No	None	Central Extract	0	3	Negative	None	43	n/a		200	n/a	None	A	80	Presence detection	Floor 0m	See Guidance Notes	n/a
		Disposal Hold	1	10.0	Disposal Hold	Y0646	28	18	Adjacent Space Transfer Air	None	No	None	Central Dirty Extract	0	10	Negative	None	43	n/a		100	n/a	None	A	90	Presence detection	Floor 0m	See Guidance Notes	n/a
		Physical Measurement	1	3.5	Consulting Room	C0522-02	28	18	Radiant Panels	Remote Sensor Adj.	Yes	Comfort Cooled Fresh Air	Central Supply and Extract	3	3	Balanced	G4	43	41		300	n/a	1000	A	80	Switch	Bed / Trolley 1.45m	See Guidance Notes	1
D10	Ambulatory Care Shared Support	Staff Room	1	48.0	Common room/staff room/lounge	D0608-03	28	18	Radiant Panels	Remote Sensor Adj.	Yes	Comfort Cooled Fresh Air	Central Supply and Extract	6	8	Negative	G4	43	41		300	n/a	None	A	80	Switch	Floor 0m	See Guidance Notes	n/a
		Reception Desk/Staff Base	1	3.0	Reception	J0132-01	28	18	Radiant Panels	Remote Sensor Adj.	Yes	Comfort Cooled Fresh Air	Central Supply Air	4	4	Balanced	G4	43	n/a		300	n/a	None	A	80	Switch	Desk 0.75 to 0.85m	See Guidance Notes	n/a
		Dining / Play Room	1	15.0	Eating/Drinking	D0608-01	28	18	Radiant Panels	Remote Sensor Adj.	Yes	Comfort Cooled Fresh Air	Central Supply and Extract	10 l/s per person	10 l/s per person	Balanced	G4	43	41		300	n/a	None	A	80	Switch	Floor 0m	See Guidance Notes	n/a
		Single Bedroom	4	17.0	Bedroom	B0305-01	25	18	Radiant Panels	Remote Sensor Adj.	Yes	Comfort Cooled Fresh Air	Natural & Central Supply Air	4	via ensuite	Balanced	G4	43	41		100	5	300	A	80	Switch / Dimmer	Bed / Trolley 1.45m	See Guidance Notes	1
		En-suite Shower / WC / WHB	4	4.5	Bathroom	V1643	28	20	Adjacent Space Transfer Air	None	No	None	Central Dirty Extract	0	10	Negative	None	43	41		200	n/a	None	A	80	Presence detection	Floor 0m	See Guidance Notes	n/a
		4 Bed Room	2	63.0	Multi-bed Wards	B0405	25	18	Radiant Panels	Remote Sensor Adj.	Yes	Comfort Cooled Fresh Air	Natural and Central Supply Air	4	via ensuite	positive to ensuite	G4	43	41		100	5	300	A	80	switch / dimmer	Bed / Trolley 1.45m	See Guidance Notes	n/a
		En-suite Shower / WC / WHB	2	6.0	Bathroom	V1643	28	20	Adjacent Space Transfer Air	None	No	None	Central Dirty Extract	0	10	Negative	None	43	41		200	n/a	None	A	80	Presence detection	Floor 0m	See Guidance Notes	n/a
		Single Bedroom	2	17.0	Bedroom	B0305-01	25	18	Radiant Panels	Remote Sensor Adj.	Yes	Comfort Cooled Fresh Air	Natural & Central Supply Air	4	via ensuite	Balanced	G4	43	41		100	5	300	A	80	Switch / Dimmer	Bed / Trolley 1.45m	See Guidance Notes	1
		En-suite wheelchair-accessible WC, Shower & wash	2	4.5	Bathroom	V1643	28	20	Adjacent Space Transfer Air	None	No	None	Central Dirty Extract	0	10	Negative	None	43	41		200	n/a	None	A	80	Presence detection	Floor 0m	See Guidance Notes	n/a
		Bath / WC / Washing	1	14.0	Bathroom	V1736	28	20	Adjacent Space Transfer Air	None	No	None	Central Dirty Extract	0	10	Negative	None	43	41		200	n/a	None	A	80	Presence detection	Floor 0m	See Guidance Notes	n/a
		Treatment Room	1	16.0	Treatment Room	X0105	28	18	Radiant Panels	Remote Sensor Adj.	Yes	Comfort Cooled Fresh Air	Central Supply Air	10	0	Positive	F7	43	41		500	n/a	1000	A	90	Switch	Bed / Trolley 1.45m	See Guidance Notes	n/a
		Ward Management Office	1	9	Cellular / Ward Offices	M0251	25	18	Radiant Panels	Remote Sensor Adj.	Yes	Comfort Cooled Fresh Air	Central Supply and Extract	4	4	Balanced	G4	43	n/a		300	n/a	None	A	80	Switch	Desk 0.75 to 0.85m	See Guidance Notes	n/a
		Touchdown Base	2	2	staff base	T0151	28	18	Radiant Panels	Remote Sensor Adj.	No	None	Central Supply and Extract	10l/s/per person	10l/s/per person	Balanced	G4	n/a	n/a		200/300	n/a	None	A	80	Switch / Dimmer	Desk 0.75 to 0.85m	See Guidance Notes	n/a
		Staff WC	1	3.0	Toilet	V1010	28	18	Adjacent Space Transfer Air	None	No	None	Central Dirty Extract	0	10	Negative	None	43	41		200	n/a	None	A	80	Presence detection	Floor 0m	See Guidance Notes	n/a
		WC - Visitors	1	3.0	Toilet	V1010	28	18	Adjacent Space Transfer Air	None	No	None	Central Dirty Extract	0	10	Negative	None	43	41		200	n/a	None	A	80	Presence detection	Floor 0m	See Guidance Notes	n/a
		Clean Utility	1	12.0	Clean Utility	T0101	28	18	Radiant Panels	Remote Sensor Adj.	Yes	Comfort Cooled Fresh Air	Central Supply Air	6	0	Positive	G4	43	41		150	n/a	None	A	80	Presence detection	General working plane 1m	See Guidance Notes	n/a
		Dirty Utility	1	14.0	Dirty utility	Y0431	28	18	Adjacent Space Transfer Air	None	No	None	Central Dirty Extract	0	6	Negative	None	43	41		200	n/a	None	A	80	Presence detection	Floor 0m	See Guidance Notes	n/a
		Pantry	1	8.0	Pantry	P0627	28	18	Radiant Panels	Remote Sensor Adj.	Yes	Comfort Cooled Fresh Air	Central Supply and Extract	6	8	Negative	G4	43	41		300	n/a	None	A	80	Switch	Floor 0m	See Guidance Notes	n/a
		Resus Trolley Bay	1	1.0	Resus Trolley bay	G0180-01	28	18	Adjacent Space Transfer Air	None	No	None	None	0	0	n/a	None	43	n/a		500	n/a	None	A	90	Switch	Bed / Trolley 1.45m	See Guidance Notes	n/a
		Linen Bay	1	1.5	Linen Bay	W1594-01	28	16	Adjacent Space Transfer Air	None	No	None	Central Extract	0	3	Negative	None	43	n/a		200	n/a	None	A	80	Presence detection	Floor 0m	See Guidance Notes	n/a
		Store - General	1	10.0	Storage Area Equipment	W1585	28	16	Radiant Panels	Remote Sensor Adj.	No	None	Central General Extract	0	3	Negative	None	43	n/a		200	n/a	None	A	80	Presence detection	Floor 0m	See Guidance Notes	n/a
		Store - Equipment	1	10.0	Storage Area Equipment	W1585	28	16	Radiant Panels	Remote Sensor Adj.	No	None	Central General Extract	0	3	Negative	None	43	n/a		200	n/a	None	A	80	Presence detection	Floor 0m	See Guidance Notes	n/a
		DSR	1	7.0	DSR	Y1510	28	18	Adjacent Space Transfer Air	None	No	None	Central Dirty Extract	0	6	Negative	None	43	60		100	n/a	None	A	90	Presence detection	Floor 0m	See Guidance Notes	n/a
E1	Pod	RHSC OPD Reception	1	10.0	Reception	J0132-01	28	18	Radiant Panels	Remote Sensor Adj.	Yes	Comfort Cooled Fresh Air	Central Supply Air	4	4	Balanced	G4	43	n/a		300	n/a	None	A	80	Switch	Desk 0.75 to 0.85m	See Guidance Notes	n/a
		RHSC OPD Main Waiting	1	15.0	Waiting Room	J1255	28	18	Radiant Panels	Remote Sensor Adj.	Yes	Comfort Cooled Fresh Air	Central Supply and Extract	5	5	Balanced	G4	43	n/a		300	n/a	None	A	80	Switch	Floor 0m	See Guidance Notes	n/a
		RHSC OPD Suite A Sub Waiting	1	54.0	Waiting Room	J0132-02	28	18	Radiant Panels	Remote Sensor Adj.	Yes	Comfort Cooled Fresh Air	Central Supply and Extract	5	5	Balanced	G4	43	n/a		300	n/a	None	A	80	Switch	Floor 0m	See Guidance Notes	n/a
		Multi-Funtional Activity Zone	1	297.0	Patient Accommodation Day	J0232-03	25	18	Radiant Panels	Remote Sensor Adj.	Yes	Comfort Cooled Fresh Air	Central Supply Air	4	4	Balanced	G4	43	41		100	n/a	None	A	80	Switch	Bed / Trolley 1.45m	See Guidance Notes	n/a
		WC Fully Accessible changing room	4	4.5	Toilet	V0922-01	28	18	Adjacent Space Transfer Air	None	No	None	Central Dirty Extract	0	10	Negative	None	43	41		200	n/a	None	A	80	Presence detection	Floor 0m	See Guidance Notes	n/a
		Wheelchair Accessible	1	3.0	Toilet	V1010	28	18	Adjacent Space Transfer Air	None	No	None	Central Dirty Extract	0	10	Negative	None	43	41		200	n/a	None	A	80	Presence detection	Floor 0m	See Guidance Notes	n/a

RHSC / DCN Environmental Matrix

Dept	Dept	Room Name	Qty		Room Function	ADB Code	Temp (max)	Temp (min)	Heating Type	Heating Control	Cooling (present)	Cooling (type)	Ventilation (type)	Supply (ac/hr)	Extract (ac/hr)	Relative pressure	Min filtration	Surface temp	Water temp	Safety Notes	Normal lux	Night lux	Local lux	Standby grade	Colour render	Control	Plane	Medical Location	
		WC - Ambulant	1	7.0	Toilet	V1010	28	18	Adjacent Space Transfer Air	None	No	None	Central Dirty Extract	0	10	Negative	None	43	41		200	n/a	None	A	80	Presence detection	Floor 0m	See Guidance Notes	n/a
		DSR	1	7.0	DSR	Y1510	28	18	Adjacent Space Transfer Air	None	No	None	Central Dirty Extract	0	6	Negative	None	43	60		100	n/a	None	A	90	Presence detection	Floor 0m	See Guidance Notes	n/a
		Reception	1	6.0	Reception	J0132-01	28	18	Radiant Panels	Remote Sensor Adj.	Yes	Comfort Cooled Fresh Air	Central Supply Air	4	4	Balanced	G4	43	n/a		300	n/a	None	A	80	Switch	Desk 0.75 to 0.85m	See Guidance Notes	n/a
		Waiting Area	1	18.0	Waiting Room	J0132-02	28	18	Radiant Panels	Remote Sensor Adj.	Yes	Comfort Cooled Fresh Air	Central Supply and Extract	5	5	Balanced	G4	43	n/a		300	n/a	None	A	80	Switch	Floor 0m	See Guidance Notes	n/a
		Group Room	1	24.0	Meeting Room	H1107	25	18	Radiant Panels	Remote Sensor Adj.	Yes	Ceiling Cassette - Chilled Water	Central Supply and Extract	10 l/s per person	10 l/s per person	Balanced	G4	43	n/a		300	n/a	None	A	80	Switch	Desk 0.75 to 0.85m	See Guidance Notes	n/a
		Control / Viewing	1	10.0	Diagnostic room	E0604-06	25	18	Warm Air - Reheat Battery	BMS Adjustable Sensor	Yes	Comfort Cooled	Central Supply and Extract	to suit location	to suit location	Balanced	F7	43	41		300	n/a	1000	A	80	Switch / Dimmer	General working plane 1m	See Guidance Notes	1
		Time Out Room	1	6.0	Common room/staff room/lounge	H1107-01	28	18	Radiant Panels	Remote Sensor Adj.	Yes	Comfort Cooled Fresh Air	Central Supply and Extract	6	8	Negative	G4	43	41		300	n/a	None	A	80	Switch	Floor 0m	See Guidance Notes	n/a
		Play Room	1	24.0	Common room/staff room/lounge	H1322-01	28	18	Radiant Panels	Remote Sensor Adj.	Yes	Comfort Cooled Fresh Air	Central Supply and Extract	6	8	Negative	G4	43	41		300	n/a	None	A	80	Switch	Floor 0m	See Guidance Notes	n/a
		Multi-Disciplinary Office	1	28.7	Multi Disciplinary Work Areas	M0254	25	18	Radiant Panels	Remote Sensor Adj.	Yes	Comfort Cooled Fresh Air	Central Supply and Extract	4	4	Balanced	G4	43	n/a		300	n/a	1000	A	80	Switch	Desk 0.75 to 0.85m	See Guidance Notes	n/a
		Sitting Room	1	15.0	Common room/staff room/lounge	D1120	28	18	Radiant Panels	Remote Sensor Adj.	Yes	Comfort Cooled Fresh Air	Central Supply and Extract	6	8	Negative	G4	43	41		300	n/a	None	A	80	Switch	Floor 0m	See Guidance Notes	n/a
		Multi-Disciplinary Office	1	28.7	Multi Disciplinary Work Areas	M0254	25	18	Radiant Panels	Remote Sensor Adj.	Yes	Comfort Cooled Fresh Air	Central Supply and Extract	4	4	Balanced	G4	43	n/a		300	n/a	None	A	80	Switch	Desk 0.75 to 0.85m	See Guidance Notes	n/a
		Group Room	1	24.0	Common room/staff room/lounge	H1107	28	18	Radiant Panels	Remote Sensor Adj.	Yes	Comfort Cooled Fresh Air	Central Supply and Extract	6	8	Negative	G4	43	41		300	n/a	None	A	80	Switch	Desk 0.75 to 0.85m	See Guidance Notes	n/a
		Sitting Room	1	15.0	Common room/staff room/lounge	D1120	28	18	Radiant Panels	Remote Sensor Adj.	Yes	Comfort Cooled Fresh Air	Central Supply and Extract	6	8	Negative	G4	43	41		300	n/a	None	A	80	Switch	Floor 0m	See Guidance Notes	n/a
		Multi-Disciplinary Office	1	28.7	Multi Disciplinary Work Areas	M0254	25	18	Radiant Panels	Remote Sensor Adj.	Yes	Comfort Cooled Fresh Air	Central Supply and Extract	4	4	Balanced	G4	43	n/a		300	n/a	1000	A	80	Switch	Desk 0.75 to 0.85m	See Guidance Notes	n/a
		Single Bed Room	10	10.0	Bedroom	B0510	25	18	Radiant Panels	Remote Sensor Adj.	Yes	Comfort Cooled Fresh Air	Natural & Central Supply Air	4	via ensuite	Balanced	G4	43	41		100	5	300	A	80	Switch / Dimmer	Bed / Trolley 1.45m	See Guidance Notes	1
		Single Bed Room (large)	2	11.5	Bedroom	B0510	25	18	Radiant Panels	Remote Sensor Adj.	Yes	Comfort Cooled Fresh Air	Natural & Central Supply Air	4	via ensuite	Balanced	G4	43	41		100	5	300	A	80	Switch / Dimmer	Bed / Trolley 1.45m	See Guidance Notes	1
		En-suite wheelchair-accessible WC, Shower & wash	12	4.5	Bathroom	V1610	28	20	Adjacent Space Transfer Air	None	No	None	Central Dirty Extract	0	10	Negative	None	43	41		200	n/a	None	A	80	Presence detection	Floor 0m	See Guidance Notes	n/a
		Clinical Base - Open Plan Area	1	10.0	Reception	T0151	28	18	Radiant Panels	Remote Sensor Adj.	Yes	Comfort Cooled Fresh Air	Central Supply Air	4	4	Balanced	G4	43	n/a		300	n/a	None	A	80	Switch	Desk 0.75 to 0.85m	See Guidance Notes	n/a
		TV / Living Room - Open Plan Area	1	24.0	Common room/staff room/lounge	D1120-02	28	18	Radiant Panels	Remote Sensor Adj.	Yes	Comfort Cooled Fresh Air	Central Supply and Extract	6	8	Negative	G4	43	41		300	n/a	None	A	80	Switch	Floor 0m	See Guidance Notes	n/a
		Open Space	1	43.0	Waiting Room	J0132-02	28	18	Radiant Panels	Remote Sensor Adj.	Yes	Comfort Cooled Fresh Air	Central Supply and Extract	5	5	Balanced	G4	43	n/a		300	n/a	None	A	80	Switch	Floor 0m	See Guidance Notes	n/a
		Pantry	1	8.0	Pantry	P0627	28	18	Radiant Panels	Remote Sensor Adj.	Yes	Comfort Cooled Fresh Air	Central Supply and Extract	6	8	Negative	G4	43	41		300	n/a	None	A	80	Switch	Floor 0m	See Guidance Notes	n/a
		Quiet Room	1	12	Cellular / Ward Offices	M0251	25	18	Radiant Panels	Remote Sensor Adj.	Yes	Comfort Cooled Fresh Air	Central Supply and Extract	4	4	Balanced	G4	43	n/a		300	n/a	None	A	80	Switch	Desk 0.75 to 0.85m	See Guidance Notes	n/a
		WC - Staff	2	3.0	Toilet	V1010	28	18	Adjacent Space Transfer Air	None	No	None	Central Dirty Extract	0	10	Negative	None	43	41		200	n/a	None	A	80	Presence detection	Floor 0m	See Guidance Notes	n/a
		Therapy Room	1	15.0	Consulting Room	X0613	28	18	Radiant Panels	Remote Sensor Adj.	Yes	Comfort Cooled Fresh Air	Central Supply and Extract	3	3	Balanced	G4	43	41		300	n/a	1000	A	80	Switch	Bed / Trolley 1.45m	See Guidance Notes	1
		Group Room	1	24.0	Meeting Room	H1107	25	18	Radiant Panels	Remote Sensor Adj.	Yes	Ceiling Cassette - Chilled Water	Central Supply and Extract	10 l/s per person	10 l/s per person	Balanced	G4	43	n/a		300	n/a	None	A	80	Switch	Desk 0.75 to 0.85m	See Guidance Notes	n/a
		Laundry Room	1	6.0	Laundry	Y0521	28	18	Adjacent Space Transfer Air	None	Yes	Comfort Cooled Fresh Air	Central Supply and Extract	6	10	Negative	G4	43	60		300	n/a	None	A	80	Switch	Floor 0m	See Guidance Notes	n/a
		Drug Room	1	6.0	Clean Utility	T0101	28	18	Radiant Panels	Remote Sensor Adj.	Yes	Comfort Cooled Fresh Air	Central Supply Air	6	0	Positive	G4	43	41		150	n/a	None	A	80	Presence detection	General working plane 1m	See Guidance Notes	n/a
		Dirty Utility	1	6.0	Dirty utility	Y0431	28	18	Adjacent Space Transfer Air	None	No	None	Central Dirty Extract	0	6	Negative	None	43	41		200	n/a	None	A	80	Presence detection	Floor 0m	See Guidance Notes	n/a
F1	CAMHS - 12 Bed	Disposal Hold	1	10.0	Disposal Hold	Y0646	28	18	Adjacent Space Transfer Air	None	No	None	Central Dirty Extract	0	10	Negative	None	43	n/a		100	n/a	None	A	80	Presence detection	Floor 0m	See Guidance Notes	n/a
		Linen Bay	1	1.5	Linen Bay	W1594-01	28	16	Adjacent Space Transfer Air	None	No	None	Central Extract	0	3	Negative	None	43	n/a		200	n/a	None	A	80	Presence detection	Floor 0m	See Guidance Notes	n/a
		Treatment Room	1	16.0	Treatment Room	X0105	28	18	Radiant Panels	Remote Sensor Adj.	Yes	Comfort Cooled Fresh Air	Central Supply Air	10	0	Positive	F7	43	41		500	n/a	1000	A	90	Switch	Bed / Trolley 1.45m	See Guidance Notes	n/a
		Multidisciplinary Office - Inpatients	1	28.7	Multi Disciplinary Work Areas	M0254	25	18	Radiant Panels	Remote Sensor Adj.	Yes	Comfort Cooled Fresh Air	Central Supply and Extract	4	4	Balanced	G4	43	n/a		300	n/a	1000	A	80	Switch	Desk 0.75 to 0.85m	See Guidance Notes	n/a
		Multidisciplinary Office - ITS	1	24.6	Multi Disciplinary Work Areas	M0254	25	18	Radiant Panels	Remote Sensor Adj.	Yes	Comfort Cooled Fresh Air	Central Supply and Extract	4	4	Balanced	G4	43	n/a		300	n/a	1000	A	80	Switch	Desk 0.75 to 0.85m	See Guidance Notes	n/a
		Resuscitation Trolley Bay	1	1.0	Resus Trolley bay	G0180-01	28	18	Adjacent Space Transfer Air	None	No	None	None	0	0	n/a	None	43	n/a		500	n/a	None	A	90	Switch	Bed / Trolley 1.45m	See Guidance Notes	n/a
		Consultant Psychiatrist / Psychologist	1	20.5	Cellular / Ward Offices	M0251	25	18	Radiant Panels	Remote Sensor Adj.	Yes	Comfort Cooled Fresh Air	Central Supply and Extract	4	4	Balanced	G4	43	n/a		300	n/a	None	A	80	Switch	Desk 0.75 to 0.85m	See Guidance Notes	n/a
		Secretary/Filing Office	1	18	Cellular / Ward Offices	M0251	25	18	Radiant Panels	Remote Sensor Adj.	Yes	Comfort Cooled Fresh Air	Central Supply and Extract	4	4	Balanced	G4	43	n/a		300	n/a	None	A	80	Switch	Desk 0.75 to 0.85m	See Guidance Notes	n/a
		Storage (testing)	1	6.0	Storage Area Equipment	W1585-??	28	16	Radiant Panels	Remote Sensor Adj.	No	None	Central General Extract	0	3	Negative	None	43	n/a		200	n/a	None	A	80	Presence detection	Floor 0m	See Guidance Notes	n/a
		Storage / Photocopy	1	10.0	Storage Area Equipment	W1585-??	28	16	Radiant Panels	Remote Sensor Adj.	No	None	Central General Extract	0	3	Negative	None	43	n/a		200	n/a	None	A	80	Presence detection	Floor 0m	See Guidance Notes	n/a
		Physical Measurement	1	3.5	Consulting Room	C0522-02	28	18	Radiant Panels	Remote Sensor Adj.	Yes	Comfort Cooled Fresh Air	Central Supply and Extract	3	3	Balanced	G4	43	41		300	n/a	1000	A	80	Switch	Bed / Trolley 1.45m	See Guidance Notes	1
		Large Family Interview Room	1	14.0	Meeting Room	M0724	25	18	Radiant Panels	Remote Sensor Adj.	Yes	Ceiling Cassette - Chilled Water	Central Supply and Extract	10 l/s per person	10 l/s per person	Balanced	G4	43	n/a		300	n/a	None	A	80	Switch	Desk 0.75 to 0.85m	See Guidance Notes	n/a
		Family Interview Room	1	12.0	Meeting Room	M0724	25	18	Radiant Panels	Remote Sensor Adj.	Yes	Ceiling Cassette - Chilled Water	Central Supply and Extract	10 l/s per person	10 l/s per person	Balanced	G4	43	n/a		300	n/a	None	A	80	Switch	Desk 0.75 to 0.85m	See Guidance Notes	n/a
		Interview Room	4	9.0	Meeting Room	M0724	25	18	Radiant Panels	Remote Sensor Adj.	Yes	Ceiling Cassette - Chilled Water	Central Supply and Extract	10 l/s per person	10 l/s per person	Balanced	G4	43	n/a		300	n/a	None	A	80	Switch	Desk 0.75 to 0.85m	See Guidance Notes	n/a
		WC - Wheelchair accessible	3	4.5	Toilet	V0922	28	18	Adjacent Space Transfer Air	None	No	None	Central Dirty Extract	0	10	Negative	None	43	41		200	n/a	None	A	80	Presence detection	Floor 0m	See Guidance Notes	n/a
		Shower / WC / WHB assisted	1	6.0	Bathroom	V1643	28	20	Adjacent Space Transfer Air	None	No	None	Central Dirty Extract	0	10	Negative	None	43	41		200	n/a	None	A	80	Presence detection	Floor 0m	See Guidance Notes	n/a
		Dining Room (Inpatients & Day Prog)	1	62.0	Eating/Drinking	D0608-02	28	18	Radiant Panels	Remote Sensor Adj.	Yes	Comfort Cooled Fresh Air	Central Supply and Extract	10 l/s per person	10 l/s per person	Balanced	G4	43	41		300	n/a	None	A	80	Switch	Floor 0m	See Guidance Notes	n/a
		Pantry	1	8.0	Pantry	P0627	28	18	Radiant Panels	Remote Sensor Adj.	Yes	Comfort Cooled Fresh Air	Central Supply and Extract	6	8	Negative	G4	43	41		300	n/a	None	A	80	Switch	Floor 0m	See Guidance Notes	n/a
		Therapeutic Kitchen	1	22.0	Ward Kitchen	Q0121	28	18	Adjacent Space Transfer Air	None	Yes	Ceiling Cassette - Chilled Water	Central General Extract	0	6	Negative	G4	n/a	60		500	n/a	None	A	80	Switch	General working plane 1m	See Guidance Notes	n/a
		Large Group Room	1	30.0	Meeting Room	H1107	25	18	Radiant Panels	Remote Sensor Adj.	Yes	Ceiling Cassette - Chilled Water	Central Supply and Extract	10 l/s per person	10 l/s per person	Balanced	G4	43	n/a		300	n/a	None	A	80	Switch	Desk 0.75 to 0.85m	See Guidance Notes	n/a
		Therapy / Play Therapy Room	1	15.0	Common room/staff room/lounge	H0322-01	28	18	Radiant Panels	Remote Sensor Adj.	Yes	Comfort Cooled Fresh Air	Central Supply and Extract	6	8	Negative	G4	43	41		300	n/a	None	A	80	Switch	Floor 0m	See Guidance Notes	n/a
		Art Room	1	24.0	Classroom	H1313-03	25	18	Radiant Panels	Remote Sensor Adj.	Yes	Ceiling Cassette - Chilled Water	Central Supply and Extract	10 l/s per person	10 l/s per person	Balanced	G4	43	41		300	n/a	None	A	80	Switch	Desk 0.75 to 0.85m	See Guidance Notes	n/a
		Recreation Room	1	45.0	Common room/staff room/lounge	H0322-01	28	18	Radiant Panels	Remote Sensor Adj.	Yes	Comfort Cooled Fresh Air	Central Supply and Extract	6	8	Negative	G4	43	41		300	n/a	None	A	80	Switch	Floor 0m	See Guidance Notes	n/a
		DSR	1	7.0	DSR	Y1510	28	18	Adjacent Space Transfer Air	None	No	None	Central Dirty Extract	0	6	Negative	None	43	60		100	n/a	None	A	90	Presence detection	Floor 0m	See Guidance Notes	n/a
		Ward Manager Office	1	16.0	Cellular / Ward Offices	M0251	25	18	Radiant Panels	Remote Sensor Adj.	Yes	Comfort Cooled Fresh Air	Central Supply and Extract	4	4	Balanced	G4	43	n/a		300	n/a	None	A	80	Switch	Desk 0.75 to 0.85m	See Guidance Notes	n/a
		Ward kitchen	1	12.0	Ward Kitchen	P0627-01	28	18	Adjacent Space Transfer Air	None	Yes	Ceiling Cassette - Chilled Water	Central General Extract	0	6	Negative	G4	n/a	60		500	n/a	None	A	80	Switch	General working plane 1m	See Guidance Notes	n/a
		Quiet Zone	1	11.0	Common room/staff room/lounge	H1107-01	28	18	Radiant Panels	Remote Sensor Adj.	Yes	Comfort Cooled Fresh Air	Central Supply and Extract	6	8	Negative	G4	43	41		300	n/a	None	A	80	Switch	Floor 0m	See Guidance Notes	n/a
		Dictation/ 1:1/Phone Booth	1	4.2	Cellular / Ward Offices	M0251-01	25	18	Radiant Panels	Remote Sensor Adj.	Yes	Comfort Cooled Fresh Air	Central Supply and Extract	4	4	Balanced	G4	43	n/a		300	n/a	None	A	80	Switch	Desk 0.75 to 0.85m	See Guidance Notes	n/a
		Dirty Equipment	1	10.0	Storage Area Equipment	W1585-??	28	16	Radiant Panels	Remote Sensor Adj.	No	None	Central General Extract	0	3	Negative	None	43	n/a		200	n/a	None	A	80	Presence detection	Floor 0m	See Guidance Notes	n/a
G2	Equipment Librar	Clean Equipment	1	50.0	Storage Area Equipment	W1585-??	28	16	Radiant Panels	Remote Sensor Adj.	No	None	Central General Extract	0	3	Negative	None	43	n/a		200	n/a	None	A	80	Presence detection	Floor 0m	See Guidance Notes	n/a
		Disposal Hold	1	10.0	Disposal Hold	Y0646	28	18	Adjacent Space Transfer Air	None	No	None	Central Dirty Extract	0	10	Negative	None	43	n/a		100	n/a	None	A	90	Presence detection	Floor 0m	See Guidance Notes	n/a
		DSR	1	7.0	DSR	Y1510	28	18	Adjacent Space Transfer Air	None	No	None	Central Dirty Extract	0	6	Negative	None	43	60		100	n/a	None	A	90	Presence detection	Floor 0m	See Guidance Notes	n/a

RHSC / DCN Environmental Matrix

Dept	Dept	Room Name	Qty		Room Function	ADB Code	Temp (max)	Temp (min)	Heating Type	Heating Control	Cooling (present)	Cooling (type)	Ventilation (type)	Supply (ac/hr)	Extract (ac/hr)	Relative pressure	Min filtration	Surface temp	Water temp	Safety Notes	Normal lux	Night lux	Local lux	Standby grade	Colour render	Control	Plane	Medical Location	
G3	On-Call Suite	On-Call Bedroom	3	10.0	Bedroom	D1311	25	18	Radiant Panels	Remote Sensor Adj.	Yes	Comfort Cooled Fresh Air	Natural & Central Supply Air	4	via ensuite	Balanced	G4	43	41		100	5	300	A	80	Switch / Dimmer	Bed / Trolley 1.45m	See Guidance Notes	1
		DSR	1	7.0	DSR	Y1510	28	18	Adjacent Space Transfer Air	None	No	None	Central Dirty Extract	0	6	Negative	None	43	60		100	n/a	None	A	90	Presence detection	Floor 0m	See Guidance Notes	n/a
		Mini Kitchen	1	3.6	Eating/Drinking	D0608-01	28	18	Radiant Panels	Remote Sensor Adj.	Yes	Comfort Cooled Fresh Air	Central Supply and Extract	10 l/s per person	10 l/s per person	Balanced	G4	43	41		300	n/a	None	A	80	Switch	Floor 0m	See Guidance Notes	n/a
		En-suite Shower / WC / WHB	3	4.5	Bathroom	V1643	28	20	Adjacent Space Transfer Air	None	No	None	Central Dirty Extract	0	10	Negative	None	43	41		200	n/a	None	A	80	Presence detection	Floor 0m	See Guidance Notes	n/a
H1	Child Life & Health	Seminar / Tutorial Room	2	40.0	Classroom	H1313-03	25	18	Radiant Panels	Remote Sensor Adj.	Yes	Ceiling Cassette - Chilled Water	Central Supply and Extract	10 l/s per person	10 l/s per person	Balanced	G4	43	41		300	n/a	None	A	80	Switch	Desk 0.75 to 0.85m	See Guidance Notes	n/a
		Conference / Meeting Room	1	25.0	Meeting Room	H1313-03	25	18	Radiant Panels	Remote Sensor Adj.	Yes	Ceiling Cassette - Chilled Water	Central Supply and Extract	10 l/s per person	10 l/s per person	Balanced	G4	43	n/a		300	n/a	None	A	80	Switch	Desk 0.75 to 0.85m	See Guidance Notes	n/a
		Lockers	1	12.0	Changing Facilities	V0726	28	18	Radiant Panels	Remote Sensor Adj.	Yes	Comfort Cooled Fresh Air	Central Supply and Extract	6	10	positive to wc	G4	43	41		100	n/a	None	A	80	Presence detection	Floor 0m	See Guidance Notes	n/a
		WC - Ambulant	4	3.0	Toilet	V1010	28	18	Adjacent Space Transfer Air	None	No	None	Central Dirty Extract	0	10	Negative	None	43	41		200	n/a	None	A	80	Presence detection	Floor 0m	See Guidance Notes	n/a
		WC - Accessible	2	4.5	Toilet	V0922	28	18	Adjacent Space Transfer Air	None	No	None	Central Dirty Extract	0	10	Negative	None	43	41		200	n/a	None	A	80	Presence detection	Floor 0m	See Guidance Notes	n/a
		Waiting Area	1	10.0	Waiting Room	J0132-02	28	18	Radiant Panels	Remote Sensor Adj.	Yes	Comfort Cooled Fresh Air	Central Supply and Extract	5	5	Balanced	G4	43	n/a		300	n/a	None	A	80	Switch	Floor 0m	See Guidance Notes	n/a
		Admin Office	1	20.5	Cellular / Ward Offices	M0251	25	18	Radiant Panels	Remote Sensor Adj.	Yes	Comfort Cooled Fresh Air	Central Supply and Extract	4	4	Balanced	G4	43	n/a		300	n/a	None	A	80	Switch	Desk 0.75 to 0.85m	See Guidance Notes	n/a
		Beverage Bay	1	3.0	Tea Making	P0625	28	18	Adjacent Space Transfer Air	None	No	None	Central General Extract	0	5	Negative	None	43	41		200	n/a	None	A	80	switch	Floor 0m	See Guidance Notes	n/a
		Head of Department	1	16	Cellular / Ward Offices	M0251	25	18	Radiant Panels	Remote Sensor Adj.	Yes	Comfort Cooled Fresh Air	Central Supply and Extract	4	4	Balanced	G4	43	n/a		300	n/a	None	A	80	Switch	Desk 0.75 to 0.85m	See Guidance Notes	n/a
		Laboratory / Finance Manager's Office	1	11	Cellular / Ward Offices	M0251	25	18	Radiant Panels	Remote Sensor Adj.	Yes	Comfort Cooled Fresh Air	Central Supply and Extract	4	4	Balanced	G4	43	n/a		300	n/a	None	A	80	Switch	Desk 0.75 to 0.85m	See Guidance Notes	n/a
		Student Records Store	1	12.0	Storage Area Equipment	W1585-??	28	16	Radiant Panels	Remote Sensor Adj.	No	None	Central General Extract	0	3	Negative	None	43	n/a		200	n/a	None	A	80	Presence detection	Floor 0m	See Guidance Notes	n/a
		Senior Academic Staff	6	11	Cellular / Ward Offices	M0251	25	18	Radiant Panels	Remote Sensor Adj.	Yes	Comfort Cooled Fresh Air	Central Supply and Extract	4	4	Balanced	G4	43	n/a		300	n/a	None	A	80	Switch	Desk 0.75 to 0.85m	See Guidance Notes	n/a
		16 Person Office	1	80	Open Plan Office	M0132-01	25	18	Radiant Panels	Remote Sensor Adj.	Yes	Comfort Cooled Fresh Air	Central Supply and Extract	4	4	Balanced	G4	43	n/a		300	n/a	None	A	80	Switch	Desk 0.75 to 0.85m	See Guidance Notes	n/a
		Meeting Room - 4 person	1	6.0	Meeting Room	H1313-01	25	18	Radiant Panels	Remote Sensor Adj.	Yes	Ceiling Cassette - Chilled Water	Central Supply and Extract	10 l/s per person	10 l/s per person	Balanced	G4	43	n/a		300	n/a	None	A	80	Switch	Desk 0.75 to 0.85m	See Guidance Notes	n/a
		Stationery / Photocopying	1	6.0	Cellular / Ward Offices	M0251	25	18	Radiant Panels	Remote Sensor Adj.	Yes	Comfort Cooled Fresh Air	Central Supply and Extract	4	4	Balanced	G4	43	n/a		300	n/a	None	A	80	Switch	Desk 0.75 to 0.85m	See Guidance Notes	n/a
		Tissue Culture Room	1	9.0	Laboratory	L0102-03	25	18	Radiant Panels	Remote Sensor Adj.	Yes	Ceiling Cassette - Chilled Water	Central Supply and Extract	6	6	Balanced	F7	43	60		500	n/a	None	A	80	Switch	Desk 0.75 to 0.85m	See Guidance Notes	n/a
		Freezer Store	1	6.0	Storage Area Equipment	W1585-??	28	16	Radiant Panels	Remote Sensor Adj.	No	None	Central General Extract	0	3	Negative	None	43	n/a		200	n/a	None	A	80	Presence detection	Floor 0m	See Guidance Notes	n/a
		Physiological Laboratory	1	45.0	Laboratory	L0102-02	25	18	Radiant Panels	Remote Sensor Adj.	Yes	Ceiling Cassette - Chilled Water	Central Supply and Extract	6	6	Balanced	F7	43	60		500	n/a	None	A	80	Switch	Desk 0.75 to 0.85m	See Guidance Notes	n/a
		DSR	1	7.0	DSR	Y1510	28	18	Adjacent Space Transfer Air	None	No	None	Central Dirty Extract	0	6	Negative	None	43	60		100	n/a	None	A	90	Presence detection	Floor 0m	See Guidance Notes	n/a
		Disposal Hold	1	10.0	Disposal Hold	Y0646	28	18	Adjacent Space Transfer Air	None	No	None	Central Dirty Extract	0	10	Negative	None	43	n/a		100	n/a	None	A	90	Presence detection	Floor 0m	See Guidance Notes	n/a
		Molecular Biology Laboratory	1	45.0	Laboratory	L0102-01	25	18	Radiant Panels	Remote Sensor Adj.	Yes	Ceiling Cassette - Chilled Water	Central Supply and Extract	6	6	Balanced	F7	43	60		500	n/a	None	A	80	Switch	Desk 0.75 to 0.85m	See Guidance Notes	n/a
H2	Clinical Research Facility	Waiting Play Area	1	9.5	Waiting Room	J0132-02	28	18	Radiant Panels	Remote Sensor Adj.	Yes	Comfort Cooled Fresh Air	Central Supply and Extract	5	5	Balanced	G4	43	n/a		300	n/a	None	A	80	Switch	Floor 0m	See Guidance Notes	n/a
		Reception	1	3.0	Reception	J0132-01	28	18	Radiant Panels	Remote Sensor Adj.	Yes	Comfort Cooled Fresh Air	Central Supply Air	4	4	Balanced	G4	43	n/a		300	n/a	None	A	80	Switch	Desk 0.75 to 0.85m	See Guidance Notes	n/a
		DSR	1	7.0	DSR	Y1510	28	18	Adjacent Space Transfer Air	None	No	None	Central Dirty Extract	0	6	Negative	None	43	60		100	n/a	None	A	90	Presence detection	Floor 0m	See Guidance Notes	n/a
		Clinical Study Room	1	63.0	Consulting Room	B0405-01	28	18	Radiant Panels	Remote Sensor Adj.	Yes	Comfort Cooled Fresh Air	Central Supply and Extract	3	3	Balanced	G4	43	41		300	n/a	1000	A	80	Switch	Bed / Trolley 1.45m	See Guidance Notes	1
		En Suite Shower / WC / WHB	1	6.0	Bathroom	V1643	28	20	Adjacent Space Transfer Air	None	No	None	Central Dirty Extract	0	10	Negative	None	43	41		200	n/a	None	A	80	Presence detection	Floor 0m	See Guidance Notes	n/a
		Single Bed Room	2	15.0	Bedroom	B0305-01	25	18	Radiant Panels	Remote Sensor Adj.	Yes	Comfort Cooled Fresh Air	Natural & Central Supply Air	4	via ensuite	Balanced	G4	43	41		100	5	300	A	80	Switch / Dimmer	Bed / Trolley 1.45m	See Guidance Notes	1
		Isolation Bedroom Entrance Lobby	1	4.0	Isolation Lobby	G0510	25	18	Warm Air - Reheat Battery	Local / BMS Adjustable Sensor	Yes	Comfort Cooled Fresh Air	Central Supply	69	0	Positive	F7	43	n/a		200	n/a	None	A	80	Presence detection	Floor 0m	See Guidance Notes	n/a
		En Suite Shower / WC / WHB	2	4.5	Bathroom	V1643	28	20	Adjacent Space Transfer Air	None	No	None	Central Dirty Extract	0	10	Negative	None	43	41		200	n/a	None	A	80	Presence detection	Floor 0m	See Guidance Notes	n/a
		WC Accessible Patients	1	3.0	Toilet	V0922	28	18	Adjacent Space Transfer Air	None	No	None	Central Dirty Extract	0	10	Negative	None	43	41		200	n/a	None	A	80	Presence detection	Floor 0m	See Guidance Notes	n/a
		Clean Utility	1	8.0	Clean Utility	T0101	28	18	Radiant Panels	TRV Remote Head Adj.	Yes	Comfort Cooled Fresh Air	Central Supply Air	6	0	Positive	G4	43	41		150	n/a	None	A	80	Presence detection	General working plane 1m	See Guidance Notes	n/a
		Dirty Utility	1	6.0	Dirty utility	Y0431	28	18	Adjacent Space Transfer Air	None	No	None	Central Dirty Extract	0	6	Negative	None	43	41		200	n/a	None	A	80	Presence detection	Floor 0m	See Guidance Notes	n/a
		Pantry	1	6.0	Pantry	P0627	28	18	Radiant Panels	Remote Sensor Adj.	Yes	Comfort Cooled Fresh Air	Central Supply and Extract	6	8	Negative	G4	43	41		300	n/a	None	A	80	Switch	Floor 0m	See Guidance Notes	n/a
		Linen Bay	1	1.5	Linen Bay	W1594-01	28	16	Adjacent Space Transfer Air	None	No	None	Central Extract	0	3	Negative	None	43	n/a		200	n/a	None	A	80	Presence detection	Floor 0m	See Guidance Notes	n/a
		Consult/Examination	1	15.5	Consulting Room	C0224	28	18	Radiant Panels	Remote Sensor Adj.	Yes	Comfort Cooled Fresh Air	Central Supply and Extract	3	3	Balanced	G4	43	41		300	n/a	1000	A	80	Switch	Bed / Trolley 1.45m	See Guidance Notes	1
		Consult / Assessment	1	12.0	Consulting Room	C0224	28	18	Radiant Panels	Remote Sensor Adj.	Yes	Comfort Cooled Fresh Air	Central Supply and Extract	3	3	Balanced	G4	43	41		300	n/a	1000	A	80	Switch	Bed / Trolley 1.45m	See Guidance Notes	1
		WC Staff	1	3.0	Toilet	V1010	28	18	Adjacent Space Transfer Air	None	No	None	Central Dirty Extract	0	10	Negative	None	43	41		200	n/a	None	A	80	Presence detection	Floor 0m	See Guidance Notes	n/a
		Disposal Hold	1	10.0	Disposal Hold	Y0646	28	18	Adjacent Space Transfer Air	None	No	None	Central Dirty Extract	0	10	Negative	None	43	n/a		100	n/a	None	A	90	Presence detection	Floor 0m	See Guidance Notes	n/a
		Store - Equipment	1	24.0	Storage Area Equipment	W1585	28	16	Radiant Panels	Remote Sensor Adj.	No	None	Central General Extract	0	3	Negative	None	43	n/a		200	n/a	None	A	80	Presence detection	Floor 0m	See Guidance Notes	n/a
		Sample Processing	1	15.0	Diagnostic room	L1804	25	18	Warm Air - Reheat Battery	BMS Adjustable Sensor	Yes	Comfort Cooled	Central Supply and Extract	to suit location	to suit location	Balanced	F7	43	41		300	n/a	1000	A	80	Switch / Dimmer	General working plane 1m	See Guidance Notes	1
		Office - 4 person	1	20	Cellular / Ward Offices	M0251	25	18	Radiant Panels	Remote Sensor Adj.	Yes	Comfort Cooled Fresh Air	Central Supply and Extract	4	4	Balanced	G4	43	n/a		300	n/a	None	A	80	Switch	Desk 0.75 to 0.85m	See Guidance Notes	n/a
H3	Clinical Education Suite	Seminar Room	1	40.0	Meeting Room	H1313-03	25	18	Radiant Panels	Remote Sensor Adj.	Yes	Ceiling Cassette - Chilled Water	Central Supply and Extract	10 l/s per person	10 l/s per person	Balanced	G4	43	n/a		300	n/a	None	A	80	Switch	Desk 0.75 to 0.85m	See Guidance Notes	n/a
		Meeting Room	1	25.0	Meeting Room	H1313-03	25	18	Radiant Panels	Remote Sensor Adj.	Yes	Ceiling Cassette - Chilled Water	Central Supply and Extract	10 l/s per person	10 l/s per person	Balanced	G4	43	n/a		300	n/a	None	A	80	Switch	Desk 0.75 to 0.85m	See Guidance Notes	n/a
		Scenario Room	1	20.0	Meeting Room	H1313-03	25	18	Radiant Panels	Remote Sensor Adj.	Yes	Ceiling Cassette - Chilled Water	Central Supply and Extract	10 l/s per person	10 l/s per person	Balanced	G4	43	n/a		300	n/a	None	A	80	Switch	Desk 0.75 to 0.85m	See Guidance Notes	n/a
		Control Room	1	8.0	Diagnostic room	C0516	25	18	Warm Air - Reheat Battery	BMS Adjustable Sensor	Yes	Comfort Cooled	Central Supply and Extract	to suit location	to suit location	Balanced	F7	43	41		300	n/a	1000	A	80	Switch / Dimmer	General working plane 1m	See Guidance Notes	1
		Workshop / Tutorial Room	3	20.0	Classroom	H0202-01	25	18	Radiant Panels	Remote Sensor Adj.	Yes	Ceiling Cassette - Chilled Water	Central Supply and Extract	10 l/s per person	10 l/s per person	Balanced	G4	43	41		300	n/a	None	A	80	Switch	Desk 0.75 to 0.85m	See Guidance Notes	m/a
		Practice Based Educators Office	1	20	Cellular / Ward Offices	M0251	25	18	Radiant Panels	Remote Sensor Adj.	Yes	Comfort Cooled Fresh Air	Central Supply and Extract	4	4	Balanced	G4	43	n/a		300	n/a	None	A	80	Switch	Desk 0.75 to 0.85m	See Guidance Notes	n/a
		Management/ Admin Office	1	15	Cellular / Ward Offices	M0251	25	18	Radiant Panels	Remote Sensor Adj.	Yes	Comfort Cooled Fresh Air	Central Supply and Extract	4	4	Balanced	G4	43	n/a		300	n/a	None	A	80	Switch	Desk 0.75 to 0.85m	See Guidance Notes	n/a
		Manual Handling, Health & Safety	1	15.0	Classroom	H1313-03	25	18	Radiant Panels	Remote Sensor Adj.	Yes	Ceiling Cassette - Chilled Water	Central Supply and Extract	10 l/s per person	10 l/s per person	Balanced	G4	43	41		300	n/a	None	A	80	Switch	Desk 0.75 to 0.85m	See Guidance Notes	n/a
		Storage	1	15.0	Storage Area Equipment	W1585	28	16	Radiant Panels	Remote Sensor Adj.	No	None	Central General Extract	0	3	Negative	None	43	n/a		200	n/a	None	A	80	Presence detection	Floor 0m	See Guidance Notes	n/a
		WC Ambulant	2	3.0	Toilet	V1010	28	18	Adjacent Space Transfer Air	None	No	None	Central Dirty Extract	0	10	Negative	None	43	41		200	n/a	None	A	80	Presence detection	Floor 0m	See Guidance Notes	n/a
		WC / WHB disabled	1	4.5	Toilet	V0922	28	18	Adjacent Space Transfer Air	None	No	None	Central Dirty Extract	0	10	Negative	None	43	41		200	n/a	None	A	80	Presence detection	Floor 0m	See Guidance Notes	n/a
		Lockers	1	8.0	Circulation Equipment Storage Bays	V0653	28	16	Adjacent Space Transfer Air	None	No	None	Central General Extract	0	3	Negative	None	43	n/a		200	n/a	None	A	80	Presence detection	Floor 0m	See Guidance Notes	n/a
		Beverage Bay	1	3.0	Tea Making	P0625	28	18	Adjacent Space Transfer Air	None	No	None	Central General Extract	0	5	Negative	None	43	41		200	n/a	None	A	80	switch	Floor 0m	See Guidance Notes	n/a
		DSR	1	7.0	DSR	Y1510	28	18	Adjacent Space Transfer Air	None	No	None	Central Dirty Extract	0	6	Negative	None	43	60		100	n/a	None	A	90	Presence detection	Floor 0m	See Guidance Notes	n/a

RHSC / DCN Environmental Matrix

Dept	Dept	Room Name	Qty		Room Function	ADB Code	Temp (max)	Temp (min)	Heating Type	Heating Control	Cooling (present)	Cooling (type)	Ventilation (type)	Supply (ac/hr)	Extract (ac/hr)	Relative pressure	Min filtration	Surface temp	Water temp	Safety Notes	Normal lux	Night lux	Local lux	Standby grade	Colour render	Control	Plane	Medical Location	
		Computer Carrels	6	2.0	Cellular / Ward Offices	M0251-01	25	18	Radiant Panels	Remote Sensor Adj.	Yes	Comfort Cooled Fresh Air	Central Supply and Extract	4	4	Balanced	G4	43	n/a		300	n/a	None	A	80	Switch	Desk 0.75 to 0.85m	See Guidance Notes	n/a
I1	Main Entrance - Public Spaces	Draught Lobby	1	15.0	Circulation Areas - Entrance Lobby	G0800-01	28	Not Controlled	Warm Air Door Curtain	BMS Adjustable Sensor	No	None	None	0	0	Balanced	None	n/a	n/a		200	n/a	None	A	80	Presence detection	Floor 0m	See Guidance Notes	n/a
		Reception / Information Desk	1	12.0	Reception	J0132-01	28	18	Radiant Panels	Remote Sensor Adj.	Yes	Comfort Cooled Fresh Air	Central Supply Air	4	4	Balanced	G4	43	n/a		300	n/a	None	A	80	Switch	Desk 0.75 to 0.85m	See Guidance Notes	n/a
		Waiting Area	1	16.5	Waiting Room	J1155	28	18	Radiant Panels	Remote Sensor Adj.	Yes	Comfort Cooled Fresh Air	Central Supply and Extract	5	5	Balanced	G4	43	n/a		300	n/a	None	A	80	Switch	Floor 0m	See Guidance Notes	n/a
		Public Telephone Booth	1	2.0	Circulation Phone Booth	G0710	28	18	Radiant Panels	Remote Sensor Adj.	No	None	n/a	0	0	n/a	n/a	n/a	n/a		200	n/a	None	A	80	Presence detection	Floor 0m	See Guidance Notes	n/a
		Fire Control room	1	12.0	Cellular / Ward Offices	M0251	25	18	Radiant Panels	Remote Sensor Adj.	Yes	Comfort Cooled Fresh Air	Central Supply and Extract	4	4	Balanced	G4	43	n/a		300	n/a	None	A	80	Switch	Desk 0.75 to 0.85m	See Guidance Notes	n/a
		Vending Machine	1	3.0	Waiting Room	J0132-02	28	18	Radiant Panels	Remote Sensor Adj.	Yes	Comfort Cooled Fresh Air	Central Supply and Extract	5	5	Balanced	G4	43	n/a		300	n/a	None	A	80	Switch	Floor 0m	See Guidance Notes	n/a
		WC - Visitors	1	3.0	Toilet	V1010	28	18	Adjacent Space Transfer Air	None	No	None	Central Dirty Extract	0	10	Negative	None	43	41		200	n/a	None	A	80	Presence detection	Floor 0m	See Guidance Notes	n/a
		WC - Wheelchair accessible	1	4.5	Toilet	V0922	28	18	Adjacent Space Transfer Air	None	No	None	Central Dirty Extract	0	10	Negative	None	43	41		200	n/a	None	A	80	Presence detection	Floor 0m	See Guidance Notes	n/a
		Assisted Change/Nappy Change	1	7.0	Nappy Change	V1131	25	18	Radiant Panels	Remote Sensor Adj.	No	None	Central Dirty Extract	0	10	Negative	None	43	41		100	n/a	None	A	80	Presence detection	Floor 0m	See Guidance Notes	n/a
		DSR	1	7.0	DSR	Y1510	28	18	Adjacent Space Transfer Air	None	No	None	Central Dirty Extract	0	6	Negative	None	43	60		100	n/a	None	A	90	Presence detection	Floor 0m	See Guidance Notes	n/a
		Security Office	1	12.0	Cellular / Ward Offices	M0251	25	18	Radiant Panels	Remote Sensor Adj.	Yes	Comfort Cooled Fresh Air	Central Supply and Extract	4	4	Balanced	G4	43	n/a		300	n/a	None	A	80	Switch	Desk 0.75 to 0.85m	See Guidance Notes	n/a
		Wheelchair Bay	1	6.0	Circulation Areas	G0180-02	28	18	underfloor heating / none to suit location	BMS Adjustable Sensor	No	None	to suit location	to suit location	to suit location	Balanced	G4	43	41		200	n/a	None	A	80	presence detection	Floor 0m	See Guidance Notes	n/a
I2	Bed & Toy Stores	DSR	1	7.0	DSR	Y1510	28	18	Adjacent Space Transfer Air	None	No	None	Central Dirty Extract	0	6	Negative	None	43	60		100	n/a	None	A	90	Presence detection	Floor 0m	See Guidance Notes	n/a
		Store - Beds	1	96.0	Storage Area Equipment	W1585-??	28	16	Radiant Panels	Remote Sensor Adj.	No	None	Central General Extract	0	3	Negative	None	43	n/a		200	n/a	None	A	80	Presence detection	Floor 0m	See Guidance Notes	n/a
		Store - Toys	1	12.0	Storage Area Equipment	W1585-??	28	16	Radiant Panels	Remote Sensor Adj.	No	None	Central General Extract	0	3	Negative	None	43	n/a		200	n/a	None	A	80	Presence detection	Floor 0m	See Guidance Notes	n/a
J1	Bereavement Suite	Body Viewing Room	1	18.0	Body View	S0027-01	25	8	Radiant Panels	Remote Sensor Adj.	Yes	Ceiling Cassette - Specialist Cooling	Central Supply and Extract	4	6	Negative	G4	43	n/a		300	n/a	None	A	80	Switch / Dimmer	Floor 0m	See Guidance Notes	n/a
		Lobby	1	3.0	Circulation Areas - Entrance Lobby	G0800	28	Not Controlled	Warm Air Door Curtain	BMS Adjustable Sensor	No	None	None	0	0	Balanced	None	n/a	n/a		200	n/a	None	A	80	Presence detection	Floor 0m	See Guidance Notes	n/a
		Sitting Room with Beverage Bay	1	20.0	Common room/staff room/lounge	D1120	28	18	Radiant Panels	Remote Sensor Adj.	Yes	Comfort Cooled Fresh Air	Central Supply and Extract	6	8	Negative	G4	43	41		300	n/a	None	A	80	Switch	Floor 0m	See Guidance Notes	n/a
		WC - Wheelchair accessible	1	4.5	Toilet	V0922	28	18	Adjacent Space Transfer Air	None	No	None	Central Dirty Extract	0	10	Negative	None	43	41		200	n/a	None	A	80	Presence detection	Floor 0m	See Guidance Notes	n/a
J2	Ritual & Pastoral C	Prayer / Meditation / Reflection Area	1	40.0	Common room/staff room/lounge	D0434-04	28	18	Radiant Panels	Remote Sensor Adj.	Yes	Comfort Cooled Fresh Air	Central Supply and Extract	6	8	Negative	G4	43	41		300	n/a	None	A	80	Switch	Floor 0m	See Guidance Notes	n/a
		Store	1	6.0	Storage Area Equipment	W1585	28	16	Radiant Panels	Remote Sensor Adj.	No	None	Central General Extract	0	3	Negative	None	43	n/a		200	n/a	None	A	80	Presence detection	Floor 0m	See Guidance Notes	n/a
		WC wheelchair accessible / Ritual Washing Area	1	6.0	Toilet	V0922-02	28	18	Adjacent Space Transfer Air	None	No	None	Central Dirty Extract	0	10	Negative	None	43	41		200	n/a	None	A	80	Presence detection	Floor 0m	See Guidance Notes	n/a
		Office	1	12.0	Cellular / Ward Offices	M0251	25	18	Radiant Panels	Remote Sensor Adj.	Yes	Comfort Cooled Fresh Air	Central Supply and Extract	4	4	Balanced	G4	43	n/a		300	n/a	None	A	80	Switch	Desk 0.75 to 0.85m	See Guidance Notes	n/a
		Interview Room	1	9.0	Meeting Room	M0724	25	18	Radiant Panels	Remote Sensor Adj.	Yes	Ceiling Cassette - Chilled Water	Central Supply and Extract	10 l/s per person	10 l/s per person	Balanced	G4	43	n/a		300	n/a	None	A	80	Switch	Desk 0.75 to 0.85m	See Guidance Notes	n/a
		Waiting	1	8.0	Waiting Room	J0132-02	28	18	Radiant Panels	Remote Sensor Adj.	Yes	Comfort Cooled Fresh Air	Central Supply and Extract	5	5	Balanced	G4	43	n/a		300	n/a	None	A	80	Switch	Floor 0m	See Guidance Notes	n/a
		Meeting Rooms (family size)	2	15.0	Meeting Room	H1313-03	25	18	Radiant Panels	Remote Sensor Adj.	Yes	Ceiling Cassette - Chilled Water	Central Supply and Extract	10 l/s per person	10 l/s per person	Balanced	G4	43	n/a		300	n/a	None	A	80	Switch	Desk 0.75 to 0.85m	See Guidance Notes	n/a
		Drop-In Lounge / Beverage Bay	1	35.0	Common room/staff room/lounge	D1120-02	28	18	Radiant Panels	Remote Sensor Adj.	Yes	Comfort Cooled Fresh Air	Central Supply and Extract	6	8	Negative	G4	43	41		300	n/a	None	A	80	Switch	Floor 0m	See Guidance Notes	n/a
		Drop-In Multi-Purpose Room	1	39.0	Meeting Room	H1313-03	25	18	Radiant Panels	Remote Sensor Adj.	Yes	Ceiling Cassette - Chilled Water	Central Supply and Extract	10 l/s per person	10 l/s per person	Balanced	G4	43	n/a		300	n/a	None	A	80	Switch	Desk 0.75 to 0.85m	See Guidance Notes	n/a
		Complementary Therapy Room	1	15.0	Consulting Room	X0613	28	18	Radiant Panels	Remote Sensor Adj.	Yes	Comfort Cooled Fresh Air	Central Supply and Extract	3	3	Balanced	G4	43	41		300	n/a	1000	A	80	Switch	Bed / Trolley 1.45m	See Guidance Notes	1
		Interview Rooms	2	9.0	Meeting Room	M0724	25	18	Radiant Panels	Remote Sensor Adj.	Yes	Ceiling Cassette - Chilled Water	Central Supply and Extract	10 l/s per person	10 l/s per person	Balanced	G4	43	n/a		300	n/a	None	A	80	Switch	Desk 0.75 to 0.85m	See Guidance Notes	n/a
		Radio Lollipop Broadcasting Studio, Lobby	1	20.0	Circulation Areas	C0516-01	28	18	underfloor heating / none to suit location	BMS Adjustable Sensor	No	None	to suit location	to suit location	to suit location	Balanced	G4	43	41		200	n/a	None	A	80	presence detection	Floor 0m	See Guidance Notes	n/a
		Office 1	1	15.0	Cellular / Ward Offices	M0251	25	18	Radiant Panels	Remote Sensor Adj.	Yes	Comfort Cooled Fresh Air	Central Supply and Extract	4	4	Balanced	G4	43	n/a		300	n/a	None	A	80	Switch	Desk 0.75 to 0.85m	See Guidance Notes	n/a
		Office 2	1	15.0	Cellular / Ward Offices	M0251	25	18	Radiant Panels	Remote Sensor Adj.	Yes	Comfort Cooled Fresh Air	Central Supply and Extract	4	4	Balanced	G4	43	n/a		300	n/a	None	A	80	Switch	Desk 0.75 to 0.85m	See Guidance Notes	n/a
		Office 3	1	10	Cellular / Ward Offices	M0251	25	18	Radiant Panels	Remote Sensor Adj.	Yes	Comfort Cooled Fresh Air	Central Supply and Extract	4	4	Balanced	G4	43	n/a		300	n/a	None	A	80	Switch	Desk 0.75 to 0.85m	See Guidance Notes	n/a
K1	Family Support	Office 4	1	10.0	Cellular / Ward Offices	M0251	25	18	Radiant Panels	Remote Sensor Adj.	Yes	Comfort Cooled Fresh Air	Central Supply and Extract	4	4	Balanced	G4	43	n/a		300	n/a	None	A	80	Switch	Desk 0.75 to 0.85m	See Guidance Notes	n/a
		Office 5	1	19.0	Cellular / Ward Offices	M0251	25	18	Radiant Panels	Remote Sensor Adj.	Yes	Comfort Cooled Fresh Air	Central Supply and Extract	4	4	Balanced	G4	43	n/a		300	n/a	None	A	80	Switch	Desk 0.75 to 0.85m	See Guidance Notes	n/a
		Office 6	1	20.0	Cellular / Ward Offices	M0251	25	18	Radiant Panels	Remote Sensor Adj.	Yes	Comfort Cooled Fresh Air	Central Supply and Extract	4	4	Balanced	G4	43	n/a		300	n/a	None	A	80	Switch	Desk 0.75 to 0.85m	See Guidance Notes	n/a
		Beverage Bay	1	3.0	Tea Making	P0625	28	18	Adjacent Space Transfer Air	None	No	None	Central General Extract	0	5	Negative	None	43	41		200	n/a	None	A	80	switch	Floor 0m	See Guidance Notes	n/a
		DSR	1	7.0	DSR	Y1510	28	18	Adjacent Space Transfer Air	None	No	None	Central Dirty Extract	0	6	Negative	None	43	60		100	n/a	None	A	90	Presence detection	Floor 0m	See Guidance Notes	n/a
		Store	1	20.0	Storage Area Equipment	W1585	28	16	Radiant Panels	Remote Sensor Adj.	No	None	Central General Extract	0	3	Negative	None	43	n/a		200	n/a	None	A	80	Presence detection	Floor 0m	See Guidance Notes	n/a
		Store	1	8.0	Storage Area Equipment	W1585	28	16	Radiant Panels	Remote Sensor Adj.	No	None	Central General Extract	0	3	Negative	None	43	n/a		200	n/a	None	A	80	Presence detection	Floor 0m	See Guidance Notes	n/a
		WC - Staff	1	3.0	Toilet	V1010	28	18	Adjacent Space Transfer Air	None	No	None	Central Dirty Extract	0	10	Negative	None	43	41		200	n/a	None	A	80	Presence detection	Floor 0m	See Guidance Notes	n/a
		Nappy Changing Room	1	4.0	Toilet	V1131	28	18	Adjacent Space Transfer Air	None	No	None	Central Dirty Extract	0	10	Negative	None	43	41		200	n/a	None	A	80	Presence detection	Floor 0m	See Guidance Notes	n/a
		WC - Wheelchair accessible	2	4.5	Toilet	V0922	28	18	Adjacent Space Transfer Air	None	No	None	Central Dirty Extract	0	10	Negative	None	43	41		200	n/a	None	A	80	Presence detection	Floor 0m	See Guidance Notes	n/a
		Wheelchair Bay	1	6.0	Circulation Equipment Storage Bays	G0180-02	28	16	Adjacent Space Transfer Air	None	No	None	Central General Extract	0	3	Negative	None	43	n/a		200	n/a	None	A	80	Presence detection	Floor 0m	See Guidance Notes	n/a
		Reception/Waiting	1	6.0	Waiting Room	J0232-01	28	18	Radiant Panels	Remote Sensor Adj.	Yes	Comfort Cooled Fresh Air	Central Supply and Extract	5	5	Balanced	G4	43	n/a		300	n/a	None	A	80	Switch	Floor 0m	See Guidance Notes	n/a
		Office - 1 person	1	20.0	Cellular / Ward Offices	M0251	25	18	Radiant Panels	Remote Sensor Adj.	Yes	Comfort Cooled Fresh Air	Central Supply and Extract	4	4	Balanced	G4	43	n/a		300	n/a	None	A	80	Switch	Desk 0.75 to 0.85m	See Guidance Notes	n/a
		Lounge - non residents	1	30.0	Common room/staff room/lounge	D1120-02	28	18	Radiant Panels	Remote Sensor Adj.	Yes	Comfort Cooled Fresh Air	Central Supply and Extract	6	8	Negative	G4	43	41		300	n/a	None	A	80	Switch	Floor 0m	See Guidance Notes	n/a
		WC - Female	1	3.0	Toilet	V1010	28	18	Adjacent Space Transfer Air	None	No	None	Central Dirty Extract	0	10	Negative	None	43	41		200	n/a	None	A	80	Presence detection	Floor 0m	See Guidance Notes	n/a
		WC - Male	1	3.0	Toilet	V1010	28	18	Adjacent Space Transfer Air	None	No	None	Central Dirty Extract	0	10	Negative	None	43	41		200	n/a	None	A	80	Presence detection	Floor 0m	See Guidance Notes	n/a
		WC - Wheelchair accessible	1	4.5	Toilet	V0922	28	18	Adjacent Space Transfer Air	None	No	None	Central Dirty Extract	0	10	Negative	None	43	41		200	n/a	None	A	80	Presence detection	Floor 0m	See Guidance Notes	n/a
		Family Room accessible for 4 persons inc en-suite	2	48.0	Bedroom	D1311-01	25	18	Radiant Panels	Remote Sensor Adj.	Yes	Comfort Cooled Fresh Air	Natural & Central Supply Air	4	via ensuite	Balanced	G4	43	41		100	5	300	A	80	Switch / Dimmer	Bed / Trolley 1.45m	See Guidance Notes	1
		Family Room for 4 persons inc en-suite	24	19.0	Bedroom	D1311-02	25	18	Radiant Panels	Remote Sensor Adj.	Yes	Comfort Cooled Fresh Air	Natural & Central Supply Air	4	via ensuite	Balanced	G4	43	41		100	5	300	A	80	Switch / Dimmer	Bed / Trolley 1.45m	See Guidance Notes	1
		Kitchen / Dining Rooms	1	116.0	Pantry	P0627	28	18	Radiant Panels	Remote Sensor Adj.	Yes	Comfort Cooled Fresh Air	Central Supply and Extract	6	8	Negative	G4	43	41		300	n/a	None	A	80	Switch	Floor 0m	See Guidance Notes	n/a
K2	Family Hotel	Residents Day Room	1	18.0	Common room/staff room/lounge	H1322-01	28	18	Radiant Panels	Remote Sensor Adj.	Yes	Comfort Cooled Fresh Air	Central Supply and Extract	6	8	Negative	G4	43	41		300	n/a	None	A	80	Switch	Floor 0m	See Guidance Notes	n/a
		Residents Play Room	1	18.0	Common room/staff room/lounge	H1322-01	28	18	Radiant Panels	Remote Sensor Adj.	Yes	Comfort Cooled Fresh Air	Central Supply and Extract	6	8	Negative	G4	43	41		300	n/a	None	A	80	Switch	Floor 0m	See Guidance Notes	n/a
		Bathroom	1	8.0	Bathroom	V1736	28	20	Adjacent Space Transfer Air	None	No	None	Central Dirty Extract	0	10	Negative	None	43	41		200	n/a	None	A	80	Presence detection	Floor 0m	See Guidance Notes	n/a

RHSC / DCN Environmental Matrix

Dept	Dept	Room Name	Qty		Room Function	ADB Code	Temp (max)	Temp (min)	Heating Type	Heating Control	Cooling (present)	Cooling (type)	Ventilation (type)	Supply (ac/hr)	Extract (ac/hr)	Relative pressure	Min filtration	Surface temp	Water temp	Safety Notes	Normal lux	Night lux	Local lux	Standby grade	Colour render	Control	Plane	Medical Location	
		WC - Wheelchair accessible	1	4.5	Toilet	V0922	28	18	Adjacent Space Transfer Air	None	No	None	Central Dirty Extract	0	10	Negative	None	43	41		200	n/a	None	A	80	Presence detection	Floor 0m	See Guidance Notes	n/a
		Store	2	12.0	Storage Area Equipment	W1585	28	16	Radiant Panels	Remote Sensor Adj.	No	None	Central General Extract	0	3	Negative	None	43	n/a		200	n/a	None	A	80	Presence detection	Floor 0m	See Guidance Notes	n/a
		Laundry	2	15.0	Laundry	Y0521	28	18	Adjacent Space Transfer Air	None	Yes	Comfort Cooled Fresh Air	Central Supply and Extract	6	10	Negative	G4	43	60		300	n/a	None	A	80	Switch	Floor 0m	See Guidance Notes	n/a
		DSR	1	7.0	DSR	Y1510	28	18	Adjacent Space Transfer Air	None	No	None	Central Dirty Extract	0	6	Negative	None	43	60		100	n/a	None	A	90	Presence detection	Floor 0m	See Guidance Notes	n/a
		Store	1	10.0	Storage Area Equipment	W1585	28	16	Radiant Panels	Remote Sensor Adj.	No	None	Central General Extract	0	3	Negative	None	43	n/a		200	n/a	None	A	80	Presence detection	Floor 0m	See Guidance Notes	n/a
		En-suite Shower / WC / WHB	26	6.0	Toilet	V0922	28	18	Adjacent Space Transfer Air	None	No	None	Central Dirty Extract	0	10	Negative	None	43	41		200	n/a	None	A	80	Presence detection	Floor 0m	See Guidance Notes	n/a
		Storage - refuse	1	10.0	Disposal Hold	Y0646	28	18	Adjacent Space Transfer Air	None	No	None	Central Dirty Extract	0	10	Negative	None	43	n/a		100	n/a	None	A	90	Presence detection	Floor 0m	See Guidance Notes	n/a
L1	DCN Acute Care - 24 Beds	Waiting Area, relatives	1	30.0	Waiting Room	J0132-02	28	18	Radiant Panels	Remote Sensor Adj.	Yes	Comfort Cooled Fresh Air	Central Supply and Extract	5	5	Balanced	G4	43	n/a		300	n/a	None	A	80	Switch	Floor 0m	See Guidance Notes	n/a
		Multi-Disciplinary Office / Reception	1	18.0	Multi Disciplinary Work Areas	M0254	25	18	Radiant Panels	Remote Sensor Adj.	Yes	Comfort Cooled Fresh Air	Central Supply and Extract	4	4	Balanced	G4	43	n/a		300	n/a	1000	A	80	Switch	Desk 0.75 to 0.85m	See Guidance Notes	n/a
		Refreshment: Vending Machine	1	3.0	Waiting Room	J0132-02	28	18	Radiant Panels	Remote Sensor Adj.	Yes	Comfort Cooled Fresh Air	Central Supply and Extract	5	5	Balanced	G4	43	n/a		300	n/a	None	A	80	Switch	Floor 0m	See Guidance Notes	n/a
		Visitor toilets, baby changing	2	4.5	Toilet	V1131	28	18	Adjacent Space Transfer Air	None	No	None	Central Dirty Extract	0	10	Negative	None	43	41		200	n/a	None	A	80	Presence detection	Floor 0m	See Guidance Notes	n/a
		WC: Independent Wheelchair	1	4.5	Toilet	V0922	28	18	Adjacent Space Transfer Air	None	No	None	Central Dirty Extract	0	10	Negative	None	43	41		200	n/a	None	A	80	Presence detection	Floor 0m	See Guidance Notes	n/a
		Interview/Relatives Quiet Room	1	9.0	Meeting Room	M0724	25	18	Radiant Panels	Remote Sensor Adj.	Yes	Ceiling Cassette - Chilled Water	Central Supply and Extract	10 l/s per person	10 l/s per person	Balanced	G4	43	n/a		300	n/a	None	A	80	Switch	Desk 0.75 to 0.85m	See Guidance Notes	n/a
		Consulting/Examination Room	4	15.5	Consulting Room	C0224	28	18	Radiant Panels	Remote Sensor Adj.	Yes	Comfort Cooled Fresh Air	Central Supply and Extract	3	3	Balanced	G4	43	41		300	n/a	1000	A	80	Switch	Bed / Trolley 1.45m	See Guidance Notes	1
		Patient Waiting	1	20.0	Waiting Room	J0132-02	28	18	Radiant Panels	Remote Sensor Adj.	Yes	Comfort Cooled Fresh Air	Central Supply and Extract	5	5	Balanced	G4	43	n/a		300	n/a	None	A	80	Switch	Floor 0m	See Guidance Notes	n/a
		Receiving/Resuscitation area	1	30.0	Resusitation Bay	B1411	25	21	Radiant Panels	Remote Sensor Adj.	Yes	Comfort Cooled Fresh Air	Central Supply and Extract	10	6	Positive	G4	43	41		500	n/a	1000	A	80	Switch	Bed / Trolley 1.45m	See Guidance Notes	n/a
		Relatives Overnight Stay Room	1	10.0	Relatives Overnight Stay	D1311	28	20	Radiant Panels	Remote Sensor Adj.	Yes	Comfort Cooled Fresh Air	Central Supply and Extract	4	0	Positive	G4	43	41		100	n/a	None	A	80	Switch	Bed / Trolley 1.45m	See Guidance Notes	n/a
		Ensuite Accessible Shower/Wc/WHB	1	6.0	Bathroom	V1643	28	20	Adjacent Space Transfer Air	None	No	None	Central Dirty Extract	0	10	Negative	None	43	41		200	n/a	None	A	80	Presence detection	Floor 0m	See Guidance Notes	n/a
		Single Bed Room	12	19.0	Bedroom	B0305	25	18	Radiant Panels	Remote Sensor Adj.	Yes	Comfort Cooled Fresh Air	Natural & Central Supply Air	4	via ensuite	Balanced	G4	43	41		100	5	300	A	80	Switch / Dimmer	Bed / Trolley 1.45m	See Guidance Notes	1
		Ensuite Shower/Wc/WHB	12	4.5	Bathroom	V1643	28	20	Adjacent Space Transfer Air	None	No	None	Central Dirty Extract	0	10	Negative	None	43	41		200	n/a	None	A	80	Presence detection	Floor 0m	See Guidance Notes	n/a
		Single Bedroom (level 1)	12	19.0	Bedroom	B0305	25	18	Radiant Panels	Remote Sensor Adj.	Yes	Comfort Cooled Fresh Air	Natural & Central Supply Air	4	via ensuite	Balanced	G4	43	41		100	5	300	A	80	Switch / Dimmer	Bed / Trolley 1.45m	See Guidance Notes	1
		Shower Room:en-suite	12	4.5	Bathroom	V1643	28	20	Adjacent Space Transfer Air	None	No	None	Central Dirty Extract	0	10	Negative	None	43	41		200	n/a	None	A	80	Presence detection	Floor 0m	See Guidance Notes	n/a
		Touchdown Base	4	2.0	staff base	T0151	28	18	Radiant Panels	Remote Sensor Adj.	No	None	Central Supply and Extract	10l/s/per person	10l/s/per person	Balanced	G4	n/a	n/a		200/300	n/a	None	A	80	Switch / Dimmer	Desk 0.75 to 0.85m	See Guidance Notes	n/a
		Ward Management Office	1	10.0	Cellular / Ward Offices	M0251	25	18	Radiant Panels	Remote Sensor Adj.	Yes	Comfort Cooled Fresh Air	Central Supply and Extract	4	4	Balanced	G4	43	n/a		300	n/a	None	A	80	Switch	Desk 0.75 to 0.85m	See Guidance Notes	n/a
		Multi-disciplinary Office	1	18.0	Multi Disciplinary Work Areas	M0254	25	18	Radiant Panels	Remote Sensor Adj.	Yes	Comfort Cooled Fresh Air	Central Supply and Extract	4	4	Balanced	G4	43	n/a		300	n/a	None	A	80	Switch	Desk 0.75 to 0.85m	See Guidance Notes	n/a
		Staff Base	1	6.0	Cellular / Ward Offices	M0251	25	18	Radiant Panels	Remote Sensor Adj.	Yes	Comfort Cooled Fresh Air	Central Supply and Extract	4	4	Balanced	G4	43	n/a		300	n/a	None	A	80	Switch	Desk 0.75 to 0.85m	See Guidance Notes	n/a
		Linen Bay	2	1.5	Linen Bay	W1594-01	28	16	Adjacent Space Transfer Air	None	No	None	Central Extract	0	3	Negative	None	43	n/a		200	n/a	None	A	80	Presence detection	Floor 0m	See Guidance Notes	n/a
		Resuscitation Trolley Bay	2	1.0	Resus Trolley bay	G0180-01	28	18	Adjacent Space Transfer Air	None	No	None	None	0	0	n/a	None	43	n/a		500	n/a	None	A	90	Switch	Bed / Trolley 1.45m	See Guidance Notes	n/a
		Mobile X-Ray Bay	1	4.0	Circulation Equipment Storage Bays	G0180-06	28	16	Adjacent Space Transfer Air	None	No	None	Central General Extract	0	3	Negative	None	43	n/a		200	n/a	None	A	80	Presence detection	Floor 0m	See Guidance Notes	n/a
		Pantry	1	8.0	Pantry	P0627	28	18	Radiant Panels	Remote Sensor Adj.	Yes	Comfort Cooled Fresh Air	Central Supply and Extract	6	8	Negative	G4	43	41		300	n/a	None	A	80	Switch	Floor 0m	See Guidance Notes	n/a
		Interview/Relatives Quiet Room	1	9.0	Meeting Room	M0724	25	18	Radiant Panels	Remote Sensor Adj.	Yes	Ceiling Cassette - Chilled Water	Central Supply and Extract	10 l/s per person	10 l/s per person	Balanced	G4	43	n/a		300	n/a	None	A	80	Switch	Desk 0.75 to 0.85m	See Guidance Notes	n/a
		Teaching Room	1	20.0	Classroom	H1313-03	25	18	Radiant Panels	Remote Sensor Adj.	Yes	Ceiling Cassette - Chilled Water	Central Supply and Extract	10 l/s per person	10 l/s per person	Balanced	G4	43	41		300	n/a	None	A	80	Switch	Desk 0.75 to 0.85m	See Guidance Notes	n/a
		Hoist Bay	2	3.0	Circulation Equipment Storage Bays	G0180-03	28	16	Adjacent Space Transfer Air	None	No	None	Central General Extract	0	3	Negative	None	43	n/a		200	n/a	None	A	80	Presence detection	Floor 0m	See Guidance Notes	n/a
		Clean Utility	1	12.0	Clean Utility	T0101	28	18	Radiant Panels	Remote Sensor Adj.	Yes	Comfort Cooled Fresh Air	Central Supply Air	6	0	Positive	G4	43	41		150	n/a	None	A	80	Presence detection	General working plane 1m	See Guidance Notes	n/a
		Dirty Utility	2	14.0	Dirty utility	Y0431	28	18	Adjacent Space Transfer Air	None	No	None	Central Dirty Extract	0	6	Negative	None	43	41		200	n/a	None	A	80	Presence detection	Floor 0m	See Guidance Notes	n/a
		DSR	1	7.0	DSR	Y1510	28	18	Adjacent Space Transfer Air	None	No	None	Central Dirty Extract	0	6	Negative	None	43	60		100	n/a	None	A	90	Presence detection	Floor 0m	See Guidance Notes	n/a
		Disposal Hold	2	10.0	Disposal Hold	Y0646	28	18	Adjacent Space Transfer Air	None	No	None	Central Dirty Extract	0	10	Negative	None	43	n/a		100	n/a	None	A	90	Presence detection	Floor 0m	See Guidance Notes	n/a
		Storage Equipment	1	10.0	Storage Area Equipment	W1585	28	16	Radiant Panels	Remote Sensor Adj.	No	None	Central General Extract	0	3	Negative	None	43	n/a		200	n/a	None	A	80	Presence detection	Floor 0m	See Guidance Notes	n/a
		Storage Consumables	1	18.0	Storage Area Equipment	W1585-??	28	16	Radiant Panels	Remote Sensor Adj.	No	None	Central General Extract	0	3	Negative	None	43	n/a		200	n/a	None	A	80	Presence detection	Floor 0m	See Guidance Notes	n/a
		Storage Stationery	1	4.0	Storage Area Equipment	W1585-??	28	16	Radiant Panels	Remote Sensor Adj.	No	None	Central General Extract	0	3	Negative	None	43	n/a		200	n/a	None	A	80	Presence detection	Floor 0m	See Guidance Notes	n/a
		Staff Room	1	9.0	Common room/staff room/lounge	D0608-03	28	18	Radiant Panels	Remote Sensor Adj.	Yes	Comfort Cooled Fresh Air	Central Supply and Extract	6	8	Negative	G4	43	41		300	n/a	None	A	80	Switch	Floor 0m	See Guidance Notes	n/a
		Ward Kitchen	1	12.0	Ward Kitchen	P0627-01	28	18	Adjacent Space Transfer Air	None	Yes	Ceiling Cassette - Chilled Water	Central General Extract	0	6	Negative	G4	n/a	60		500	n/a	None	A	80	Switch	General working plane 1m	See Guidance Notes	n/a
		WC Staff	3	3.0	Toilet	V1010	28	18	Adjacent Space Transfer Air	None	No	None	Central Dirty Extract	0	10	Negative	None	43	41		200	n/a	None	A	80	Presence detection	Floor 0m	See Guidance Notes	n/a
L2	DCN Inpatients 43 Beds	Reception	1	3.0	Reception	J0132-01	28	18	Radiant Panels	Remote Sensor Adj.	Yes	Comfort Cooled Fresh Air	Central Supply Air	4	4	Balanced	G4	43	n/a		300	n/a	None	A	80	Switch	Desk 0.75 to 0.85m	See Guidance Notes	n/a
		Waiting Area	1	16.5	Waiting Room	J0132-02	28	18	Radiant Panels	Remote Sensor Adj.	Yes	Comfort Cooled Fresh Air	Central Supply and Extract	5	5	Balanced	G4	43	n/a		300	n/a	None	A	80	Switch	Floor 0m	See Guidance Notes	n/a
		WC: Semi Ambulant	2	3.0	Toilet	V1010	28	18	Adjacent Space Transfer Air	None	No	None	Central Dirty Extract	0	10	Negative	None	43	41		200	n/a	None	A	80	Presence detection	Floor 0m	See Guidance Notes	n/a
		WC: Independent Wheelchair	1	4.5	Toilet	V0922	28	18	Adjacent Space Transfer Air	None	No	None	Central Dirty Extract	0	10	Negative	None	43	41		200	n/a	None	A	80	Presence detection	Floor 0m	See Guidance Notes	n/a
		Single Bedroom	41	19.0	Bedroom	B0305	25	18	Radiant Panels	Remote Sensor Adj.	Yes	Comfort Cooled Fresh Air	Natural & Central Supply Air	4	via ensuite	Balanced	G4	43	41		100	5	300	A	80	Switch / Dimmer	Bed / Trolley 1.45m	See Guidance Notes	1
		Single Isolation Bedroom	2	19.0	Isolation Bedroom	B0308-??	25	21	Adjacent Space Transfer Air	BMS Adjustable Sensor	Yes	Comfort Cooled Fresh Air	Supply via lobby	10	0	Balanced	F7	43	41		100	5	300	A	80	Switch / Dimmer	Bed / Trolley 1.45m	See Guidance Notes	1
		Isolation Bedroom Entrance Lobby	2	4.0	Isolation Lobby	G0510-02	25	18	Warm Air - Reheat Battery	Local / BMS Adjustable Sensor	Yes	Comfort Cooled Fresh Air	Central Supply	69	0	Positive	F7	43	n/a		200	n/a	None	A	80	Presence detection	Floor 0m	See Guidance Notes	n/a
		Shower Room:en-suite	43	4.5	Bathroom	V1643	28	20	Adjacent Space Transfer Air	None	No	None	Central Dirty Extract	0	10	Negative	None	43	41		200	n/a	None	A	80	Presence detection	Floor 0m	See Guidance Notes	n/a
		Assisted Bathroom	1	14.0	Bathroom	V1736	28	20	Adjacent Space Transfer Air	None	No	None	Central Dirty Extract	0	10	Negative	None	43	41		200	n/a	None	A	80	Presence detection	Floor 0m	See Guidance Notes	n/a
		Treatment Room	1	16.0	Treatment Room	X0105	28	18	Radiant Panels	Remote Sensor Adj.	Yes	Comfort Cooled Fresh Air	Central Supply Air	10	0	Positive	F7	43	41		500	n/a	1000	A	90	Switch	Bed / Trolley 1.45m	See Guidance Notes	n/a
		Ward Management Office	2	9.0	Cellular / Ward Offices	M0251	25	18	Radiant Panels	Remote Sensor Adj.	Yes	Comfort Cooled Fresh Air	Central Supply and Extract	4	4	Balanced	G4	43	n/a		300	n/a	None	A	80	Switch	Desk 0.75 to 0.85m	See Guidance Notes	n/a
		Multi-disciplinary Office	2	18.0	Multi Disciplinary Work Areas	M0254	25	18	Radiant Panels	Remote Sensor Adj.	Yes	Comfort Cooled Fresh Air	Central Supply and Extract	4	4	Balanced	G4	43	n/a		300	n/a	None	A	80	Switch	Desk 0.75 to 0.85m	See Guidance Notes	n/a
		Touchdown Base	12	2.0	staff base	T0151	28	18	Radiant Panels	Remote Sensor Adj.	No	None	Central Supply and Extract	10l/s/per person	10l/s/per person	Balanced	G4	n/a	n/a		200/300	n/a	None	A	80	Switch / Dimmer	Desk 0.75 to 0.85m	See Guidance Notes	n/a
		Teaching Room	1	20.0	Classroom	H1313-03	25	18	Radiant Panels	Remote Sensor Adj.	Yes	Ceiling Cassette - Chilled Water	Central Supply and Extract	10 l/s per person	10 l/s per person	Balanced	G4	43	41		300	n/a	None	A	80	Switch	Desk 0.75 to 0.85m	See Guidance Notes	n/a
		Interview Room	2	9.0	Meeting Room	M0724	25	18	Radiant Panels	Remote Sensor Adj.	Yes	Ceiling Cassette - Chilled Water	Central Supply and Extract	10 l/s per person	10 l/s per person	Balanced	G4	43	n/a		300	n/a	None	A	80	Switch	Desk 0.75 to 0.85m	See Guidance Notes	n/a
		Sitting Room	2	12.0	Common room/staff room/lounge	D1120	28	18	Radiant Panels	Remote Sensor Adj.	Yes	Comfort Cooled Fresh Air	Central Supply and Extract	6	8	Negative	G4	43	41		300	n/a	None	A	80	Switch	Floor 0m	See Guidance Notes	n/a

RHSC / DCN Environmental Matrix

Dept	Dept	Room Name	Qty		Room Function	ADB Code	Temp (max)	Temp (min)	Heating Type	Heating Control	Cooling (present)	Cooling (type)	Ventilation (type)	Supply (ac/hr)	Extract (ac/hr)	Relative pressure	Min filtration	Surface temp	Water temp	Safety Notes	Normal lux	Night lux	Local lux	Standby grade	Colour render	Control	Plane	Medical Location	
		Pantry	2	8.0	Pantry	P0627	28	18	Radiant Panels	Remote Sensor Adj.	Yes	Comfort Cooled Fresh Air	Central Supply and Extract	6	8	Negative	G4	43	41		300	n/a	None	A	80	Switch	Floor 0m	See Guidance Notes	n/a
		Mobile X-Ray Bay	1	4.0	Circulation Equipment Storage Bays	G0180-06	28	16	Adjacent Space Transfer Air	None	No	None	Central General Extract	0	3	Negative	None	43	n/a		200	n/a	None	A	80	Presence detection	Floor 0m	See Guidance Notes	n/a
		Resuscitation Trolley Bay	2	1.0	Resus Trolley bay	G0180-01	28	18	Adjacent Space Transfer Air	None	No	None	None	0	0	n/a	None	43	n/a		500	n/a	None	A	90	Switch	Bed / Trolley 1.45m	See Guidance Notes	n/a
		Hoist Bay	5	3.0	Circulation Equipment Storage Bays	G0180-03	28	16	Adjacent Space Transfer Air	None	No	None	Central General Extract	0	3	Negative	None	43	n/a		200	n/a	None	A	80	Presence detection	Floor 0m	See Guidance Notes	n/a
		Store	2	12.0	Storage Area Equipment	W1585	28	16	Radiant Panels	Remote Sensor Adj.	No	None	Central General Extract	0	3	Negative	None	43	n/a		200	n/a	None	A	80	Presence detection	Floor 0m	See Guidance Notes	n/a
		Linen Bay	2	1.5	Linen Bay	W1594-01	28	16	Adjacent Space Transfer Air	None	No	None	Central Extract	0	3	Negative	None	43	n/a		200	n/a	None	A	80	Presence detection	Floor 0m	See Guidance Notes	n/a
		Clean Utility	2	12.0	Clean Utility	T0101	28	18	Radiant Panels	Remote Sensor Adj.	Yes	Comfort Cooled Fresh Air	Central Supply Air	6	0	Positive	G4	43	41		150	n/a	None	A	80	Presence detection	General working plane 1m	See Guidance Notes	n/a
		Dirty Utility	3	14.0	Dirty utility	Y0431	28	18	Adjacent Space Transfer Air	None	No	None	Central Dirty Extract	0	6	Negative	None	43	41		200	n/a	None	A	80	Presence detection	Floor 0m	See Guidance Notes	n/a
		DSR	2	7.0	DSR	Y1510	28	18	Adjacent Space Transfer Air	None	No	None	Central Dirty Extract	0	6	Negative	None	43	60		100	n/a	None	A	90	Presence detection	Floor 0m	See Guidance Notes	n/a
		Disposal Hold	2	10.0	Disposal Hold	Y0646	28	18	Adjacent Space Transfer Air	None	No	None	Central Dirty Extract	0	10	Negative	None	43	n/a		100	n/a	None	A	90	Presence detection	Floor 0m	See Guidance Notes	n/a
		Ward Kitchen	2	16.0	Ward Kitchen	P0627-01	28	18	Adjacent Space Transfer Air	None	Yes	Ceiling Cassette - Chilled Water	Central General Extract	0	6	Negative	G4	n/a	60		500	n/a	None	A	80	Switch	General working plane 1m	See Guidance Notes	n/a
		WC: Staff	4	3.0	Toilet	V1010	28	18	Adjacent Space Transfer Air	None	No	None	Central Dirty Extract	0	10	Negative	None	43	41		200	n/a	None	A	80	Presence detection	Floor 0m	See Guidance Notes	n/a
M1	DCN Outpatients	Enquiry / Information Desk: 2 staff	1	8.0	Reception	J0132-01	28	18	Radiant Panels	Remote Sensor Adj.	Yes	Comfort Cooled Fresh Air	Central Supply Air	4	4	Balanced	G4	43	n/a		300	n/a	None	A	80	Switch	Desk 0.75 to 0.85m	See Guidance Notes	n/a
		Medical Records Store	1	8.0	Cellular / Ward Offices	M0251	25	18	Radiant Panels	Remote Sensor Adj.	Yes	Comfort Cooled Fresh Air	Central Supply and Extract	4	4	Balanced	G4	43	n/a		300	n/a	None	A	80	Switch	Desk 0.75 to 0.85m	See Guidance Notes	n/a
		Main Waiting	1	59.0	Waiting Room	J0132-02	28	18	Radiant Panels	Remote Sensor Adj.	Yes	Comfort Cooled Fresh Air	Central Supply and Extract	5	5	Balanced	G4	43	n/a		300	n/a	None	A	80	Switch	Floor 0m	See Guidance Notes	n/a
		Public Telephone Booth	1	1.5	Circulation Phone Booth	G0710	28	18	Radiant Panels	Remote Sensor Adj.	No	None	n/a	0	0	n/a	n/a	n/a	n/a		200	n/a	None	A	80	Presence detection	Floor 0m	See Guidance Notes	n/a
		Public Telephone: Single Booth, Accessible	1	2.0	Circulation Phone Booth	G0712	28	18	Radiant Panels	Remote Sensor Adj.	No	None	n/a	0	0	n/a	n/a	n/a	n/a		200	n/a	None	A	80	Presence detection	Floor 0m	See Guidance Notes	n/a
		WC Fully Accessible Changing Room	1	7.0	Changing Facilities	V0726	28	18	Radiant Panels	Remote Sensor Adj.	Yes	Comfort Cooled Fresh Air	Central Supply and Extract	6	10	positive to wc	G4	43	41		100	n/a	None	A	80	Presence detection	Floor 0m	See Guidance Notes	n/a
		Refreshment: Vending Machine	1	3.0	Waiting Room	J0132-02	28	18	Radiant Panels	Remote Sensor Adj.	Yes	Comfort Cooled Fresh Air	Central Supply and Extract	5	5	Balanced	G4	43	n/a		300	n/a	None	A	80	Switch	Floor 0m	See Guidance Notes	n/a
		Nurse Base	1	2.0	staff base	T0151	28	18	Radiant Panels	Remote Sensor Adj.	No	None	Central Supply and Extract	10l/s/per person	10l/s/per person	Balanced	G4	n/a	n/a		200/300	n/a	None	A	80	Switch / Dimmer	Desk 0.75 to 0.85m	See Guidance Notes	n/a
		WC - Wheelchair accessible	1	4.5	Toilet	V0922	28	18	Adjacent Space Transfer Air	None	No	None	Central Dirty Extract	0	10	Negative	None	43	41		200	n/a	None	A	80	Presence detection	Floor 0m	See Guidance Notes	n/a
		Physical Measurement	1	3.5	Consulting Room	C0522-02	28	18	Radiant Panels	Remote Sensor Adj.	Yes	Comfort Cooled Fresh Air	Central Supply and Extract	3	3	Balanced	G4	43	41		300	n/a	1000	A	80	Switch	Bed / Trolley 1.45m	See Guidance Notes	1
		Consult/Examination	15.5	15.5	Consulting Room	C0224	28	18	Radiant Panels	Remote Sensor Adj.	Yes	Comfort Cooled Fresh Air	Central Supply and Extract	3	3	Balanced	G4	43	41		300	n/a	1000	A	80	Switch	Bed / Trolley 1.45m	See Guidance Notes	1
		Consult/Multi-Disciplinary	2	24.0	Consulting Room	C0207-01	28	18	Radiant Panels	Remote Sensor Adj.	Yes	Comfort Cooled Fresh Air	Central Supply and Extract	3	3	Balanced	G4	43	41		300	n/a	1000	A	80	Switch	Bed / Trolley 1.45m	See Guidance Notes	1
		Treatment Room (with prep area)	1	16.0	Treatment Room	X0105-01	28	18	Radiant Panels	Remote Sensor Adj.	Yes	Comfort Cooled Fresh Air	Central Supply Air	10	0	Positive	F7	43	41		500	n/a	1000	A	80	Switch	Bed / Trolley 1.45m	See Guidance Notes	n/a
		Phlebotomy Room	1	8.0	Consulting Room	C0224-??	28	18	Radiant Panels	Remote Sensor Adj.	Yes	Comfort Cooled Fresh Air	Central Supply and Extract	3	3	Balanced	G4	43	41		300	n/a	1000	A	80	Switch	Bed / Trolley 1.45m	See Guidance Notes	1
		Store - Equipment / General	1	6.0	Storage Area Equipment	W1585-??	28	16	Radiant Panels	Remote Sensor Adj.	No	None	Central General Extract	0	3	Negative	None	43	n/a		200	n/a	None	A	80	Presence detection	Floor 0m	See Guidance Notes	n/a
		Sub Waiting Area	1	16.5	Waiting Room	J0132-02	28	18	Radiant Panels	Remote Sensor Adj.	Yes	Comfort Cooled Fresh Air	Central Supply and Extract	5	5	Balanced	G4	43	n/a		300	n/a	None	A	80	Switch	Floor 0m	See Guidance Notes	n/a
		Nurse Base	1	2.0	staff base	T0151	28	18	Radiant Panels	Remote Sensor Adj.	No	None	Central Supply and Extract	10l/s/per person	10l/s/per person	Balanced	G4	n/a	n/a		200/300	n/a	None	A	80	Switch / Dimmer	Desk 0.75 to 0.85m	See Guidance Notes	n/a
		WC - Wheelchair accessible	1	4.5	Consulting Room	V0922	28	18	Radiant Panels	Remote Sensor Adj.	Yes	Comfort Cooled Fresh Air	Central Supply and Extract	3	3	Balanced	G4	43	41		300	n/a	1000	A	80	Switch	Bed / Trolley 1.45m	See Guidance Notes	1
		Physical Measurement	1	3.5	Consulting Room	C0522-02	28	18	Radiant Panels	Remote Sensor Adj.	Yes	Comfort Cooled Fresh Air	Central Supply and Extract	3	3	Balanced	G4	43	41		300	n/a	1000	A	80	Switch	Bed / Trolley 1.45m	See Guidance Notes	1
		Consult/Examination	4	15.5	Consulting Room	C0224	28	18	Radiant Panels	Remote Sensor Adj.	Yes	Comfort Cooled Fresh Air	Central Supply and Extract	3	3	Balanced	G4	43	41		300	n/a	1000	A	80	Switch	Bed / Trolley 1.45m	See Guidance Notes	1
		Multi-Disciplinary Office	1	26.0	Multi Disciplinary Work Areas	M0254	25	18	Radiant Panels	Remote Sensor Adj.	Yes	Comfort Cooled Fresh Air	Central Supply and Extract	4	4	Balanced	G4	43	n/a		300	n/a	None	A	80	Switch	Desk 0.75 to 0.85m	See Guidance Notes	n/a
		Clean Utility	1	8.0	Clean Utility	T0101	28	18	Radiant Panels	Remote Sensor Adj.	Yes	Comfort Cooled Fresh Air	Central Supply Air	6	0	Positive	G4	43	41		150	n/a	None	A	80	Presence detection	General working plane 1m	See Guidance Notes	n/a
		Dirty Utility: urine test	1	11.0	Dirty utility	Y0431	28	18	Adjacent Space Transfer Air	None	No	None	Central Dirty Extract	0	6	Negative	None	43	41		200	n/a	None	A	80	Presence detection	Floor 0m	See Guidance Notes	n/a
		Patient Interview Room	1	9.0	Meeting Room	M0724	25	18	Radiant Panels	Remote Sensor Adj.	Yes	Ceiling Cassette - Chilled Water	Central Supply and Extract	10 l/s per person	10 l/s per person	Balanced	G4	43	n/a		300	n/a	None	A	80	Switch	Desk 0.75 to 0.85m	See Guidance Notes	n/a
		Outpatients Management Office	1	9.0	Cellular / Ward Offices	M0251	25	18	Radiant Panels	Remote Sensor Adj.	Yes	Comfort Cooled Fresh Air	Central Supply and Extract	4	4	Balanced	G4	43	n/a		300	n/a	None	A	80	Switch	Desk 0.75 to 0.85m	See Guidance Notes	n/a
		Staff Room	1	12.0	Common room/staff room/lounge	D0608-03	28	18	Radiant Panels	Remote Sensor Adj.	Yes	Comfort Cooled Fresh Air	Central Supply and Extract	6	8	Negative	G4	43	41		300	n/a	None	A	80	Switch	Floor 0m	See Guidance Notes	n/a
		WC - Staff	2	3.0	Toilet	V1010	28	18	Adjacent Space Transfer Air	None	No	None	Central Dirty Extract	0	10	Negative	None	43	41		200	n/a	None	A	80	Presence detection	Floor 0m	See Guidance Notes	n/a
		Store: Clinical Supplies, Equipment & Stationery	1	15.0	Storage Area Equipment	W1585	28	16	Radiant Panels	Remote Sensor Adj.	No	None	Central General Extract	0	3	Negative	None	43	n/a		200	n/a	None	A	80	Presence detection	Floor 0m	See Guidance Notes	n/a
		Linen Bay	1	1.5	Linen Bay	W1594-01	28	16	Adjacent Space Transfer Air	None	No	None	Central Extract	0	3	Negative	None	43	n/a		200	n/a	None	A	80	Presence detection	Floor 0m	See Guidance Notes	n/a
		DSR	1	7.0	DSR	Y1510	28	18	Adjacent Space Transfer Air	None	No	None	Central Dirty Extract	0	6	Negative	None	43	60		100	n/a	None	A	90	Presence detection	Floor 0m	See Guidance Notes	n/a
M2	DCN Therapies	Waiting	1	18.0	Waiting Room	J0132-02	28	18	Radiant Panels	Remote Sensor Adj.	Yes	Comfort Cooled Fresh Air	Central Supply and Extract	5	5	Balanced	G4	43	n/a		300	n/a	None	A	80	Switch	Floor 0m	See Guidance Notes	n/a
		Staff Lockers	1	4.5	Changing Facilities	V0726	28	18	Radiant Panels	Remote Sensor Adj.	Yes	Comfort Cooled Fresh Air	Central Supply and Extract	6	10	positive to wc	G4	43	41		100	n/a	None	A	80	Presence detection	Floor 0m	See Guidance Notes	n/a
		Reception	1	8.0	Reception	J0132-01	28	18	Radiant Panels	Remote Sensor Adj.	Yes	Comfort Cooled Fresh Air	Central Supply Air	4	4	Balanced	G4	43	n/a		300	n/a	None	A	80	Switch	Desk 0.75 to 0.85m	See Guidance Notes	n/a
		ADL Kitchen	1	22.0	Pantry	Q0120	28	18	Radiant Panels	Remote Sensor Adj.	Yes	Comfort Cooled Fresh Air	Central Supply and Extract	6	8	Negative	G4	43	41		300	n/a	None	A	80	Switch	Floor 0m	See Guidance Notes	n/a
		ADL Bathroom, Shower, WC with hoists	1	13.0	Toilet	V1736-01	28	18	Adjacent Space Transfer Air	None	No	None	Central Dirty Extract	0	10	Negative	None	43	41		200	n/a	None	A	80	Presence detection	Floor 0m	See Guidance Notes	n/a
		Physio Treatment Room	1	15.0	Physiotherapy Studio	X0105-02	28	18	Radiant Panels	Remote Sensor Adj.	Yes	Comfort Cooled Fresh Air	Central Supply and Extract	5	6	Negative	G4	43	41		300	n/a	None	A	80	Switch / Dimmer	Floor 0m	See Guidance Notes	n/a
		Multi-Purpose Rehabilitation Room	1	80.0	Physiotherapy Studio	X0318	28	18	Radiant Panels	Remote Sensor Adj.	Yes	Comfort Cooled Fresh Air	Central Supply and Extract	5	6	Negative	G4	43	41		300	n/a	None	A	80	Switch / Dimmer	Floor 0m	See Guidance Notes	n/a
		Consult/Examination	1	15.5	Consulting Room	C0224	28	18	Radiant Panels	Remote Sensor Adj.	Yes	Comfort Cooled Fresh Air	Central Supply and Extract	3	3	Balanced	G4	43	41		300	n/a	1000	A	80	Switch	Bed / Trolley 1.45m	See Guidance Notes	1
		Distraction Free Treatment Room	2	15.0	Treatment Room	X0105	28	18	Radiant Panels	Remote Sensor Adj.	Yes	Comfort Cooled Fresh Air	Central Supply Air	10	0	Positive	F7	43	41		500	n/a	1000	A	90	Switch	Bed / Trolley 1.45m	See Guidance Notes	n/a
		Store: General/Equipment	1	25.0	Storage Area Equipment	W1585	28	16	Radiant Panels	Remote Sensor Adj.	No	None	Central General Extract	0	3	Negative	None	43	n/a		200	n/a	None	A	80	Presence detection	Floor 0m	See Guidance Notes	n/a
		Store: General/Equipment	1	20.0	Storage Area Equipment	W1585	28	16	Radiant Panels	Remote Sensor Adj.	No	None	Central General Extract	0	3	Negative	None	43	n/a		200	n/a	None	A	80	Presence detection	Floor 0m	See Guidance Notes	n/a
		Store: General/Equipment	1	5.0	Storage Area Equipment	W1585	28	16	Radiant Panels	Remote Sensor Adj.	No	None	Central General Extract	0	3	Negative	None	43	n/a		200	n/a	None	A	80	Presence detection	Floor 0m	See Guidance Notes	n/a
		Changing Cubicles	4	4.0	Changing Facilities	V0726	28	18	Radiant Panels	Remote Sensor Adj.	Yes	Comfort Cooled Fresh Air	Central Supply and Extract	6	10	positive to wc	G4	43	41		100	n/a	None	A	80	Presence detection	Floor 0m	See Guidance Notes	n/a
		Staff Office	1	65.6	Cellular / Ward Offices	M0251	25	18	Radiant Panels	Remote Sensor Adj.	Yes	Comfort Cooled Fresh Air	Central Supply and Extract	4	4	Balanced	G4	43	n/a		300	n/a	None	A	80	Switch	Desk 0.75 to 0.85m	See Guidance Notes	n/a
		Interview Room	2	9.0	Meeting Room	M0724	25	18	Radiant Panels	Remote Sensor Adj.	Yes	Ceiling Cassette - Chilled Water	Central Supply and Extract	10 l/s per person	10 l/s per person	Balanced	G4	43	n/a		300	n/a	None	A	80	Switch	Desk 0.75 to 0.85m	See Guidance Notes	n/a
		Patient Toilet	2	4.5	Toilet	V1010	28	18	Adjacent Space Transfer Air	None	No	None	Central Dirty Extract	0	10	Negative	None	43	41		200	n/a	None	A	80	Presence detection	Floor 0m	See Guidance Notes	n/a
		Staff Toilet	2	3.0	Toilet	V1010	28	18	Adjacent Space Transfer Air	None	No	None	Central Dirty Extract	0	10	Negative	None	43	41		200	n/a	None	A	80	Presence detection	Floor 0m	See Guidance Notes	n/a
	Programmed	Waiting area; 4 & 2 wheelchairs	1	17.0	Waiting Room	J0132-02	28	18	Radiant Panels	Remote Sensor Adj.	Yes	Comfort Cooled Fresh Air	Central Supply and Extract	5	5	Balanced	G4	43	n/a		300	n/a	None	A	80	Switch	Floor 0m	See Guidance Notes	n/a

RHSC / DCN Environmental Matrix

Dept	Dept	Room Name	Qty		Room Function	ADB Code	Temp (max)	Temp (min)	Heating Type	Heating Control	Cooling (present)	Cooling (type)	Ventilation (type)	Supply (ac/hr)	Extract (ac/hr)	Relative pressure	Min filtration	Surface temp	Water temp	Safety Notes	Normal lux	Night lux	Local lux	Standby grade	Colour render	Control	Plane	Medical Location	
M3	Programmed Investigations Unit	Treatment Area	1	45.0	Treatment Room	X0111	28	18	Radiant Panels	Remote Sensor Adj.	Yes	Comfort Cooled Fresh Air	Central Supply Air	10	0	Positive	F7	43	41		500	n/a	1000	A	80	Switch	Bed / Trolley 1.45m	See Guidance Notes	n/a
		Treatment Room	1	16.0	Treatment Room	X0105	28	18	Radiant Panels	Remote Sensor Adj.	Yes	Comfort Cooled Fresh Air	Central Supply Air	10	0	Positive	F7	43	41		500	n/a	1000	A	80	Switch	Bed / Trolley 1.45m	See Guidance Notes	n/a
M4	DCN Neurophysiology	Waiting Area (DCN)	1	15.0	Waiting Room	J0132-02	28	18	Radiant Panels	Remote Sensor Adj.	Yes	Comfort Cooled Fresh Air	Central Supply and Extract	5	5	Balanced	G4	43	n/a		300	n/a	None	A	80	Switch	Floor 0m	See Guidance Notes	n/a
		WC - wheelchair accessible (DCN)	1	4.5	Toilet	V0922	28	18	Adjacent Space Transfer Air	None	No	None	Central Dirty Extract	0	10	Negative	None	43	41		200	n/a	None	A	80	Presence detection	Floor 0m	See Guidance Notes	n/a
		EEG Recording Room	3	16.0	Diagnostic room	X0125	25	18	Warm Air - Reheat Battery	BMS Adjustable Sensor	Yes	Comfort Cooled	Central Supply and Extract	to suit location	to suit location	Balanced	F7	43	41		300	n/a	1000	A	80	Switch / Dimmer	General working plane 1m	See Guidance Notes	1
		EMG/Nerve Conduction Room	3	16.0	Diagnostic room	X0136	25	18	Warm Air - Reheat Battery	BMS Adjustable Sensor	Yes	Comfort Cooled	Central Supply and Extract	to suit location	to suit location	Balanced	F7	43	41		300	n/a	1000	A	80	Switch / Dimmer	General working plane 1m	See Guidance Notes	1
		VTEM/Ambulatory Review Room	1	20.0	Diagnostic room	M0251	25	18	Warm Air - Reheat Battery	BMS Adjustable Sensor	Yes	Comfort Cooled	Central Supply and Extract	to suit location	to suit location	Balanced	F7	43	41		300	n/a	1000	A	80	Switch / Dimmer	General working plane 1m	See Guidance Notes	1
		Reporting Room	1	20.0	Cellular / Ward Offices	M0251	25	18	Radiant Panels	Remote Sensor Adj.	Yes	Comfort Cooled Fresh Air	Central Supply and Extract	4	4	Balanced	G4	43	n/a		300	n/a	None	A	80	Switch	Desk 0.75 to 0.85m	See Guidance Notes	n/a
		HOD Office	1	10.0	Cellular / Ward Offices	M0251	25	18	Radiant Panels	Remote Sensor Adj.	Yes	Comfort Cooled Fresh Air	Central Supply and Extract	4	4	Balanced	G4	43	n/a		300	n/a	None	A	80	Switch	Desk 0.75 to 0.85m	See Guidance Notes	n/a
		Clinical Physiologist Room	1	24.6	Cellular / Ward Offices	M0251	25	18	Radiant Panels	Remote Sensor Adj.	Yes	Comfort Cooled Fresh Air	Central Supply and Extract	4	4	Balanced	G4	43	n/a		300	n/a	None	A	80	Switch	Desk 0.75 to 0.85m	See Guidance Notes	n/a
		Secretarial Office	1	9.0	Cellular / Ward Offices	M0251	25	18	Radiant Panels	Remote Sensor Adj.	Yes	Comfort Cooled Fresh Air	Central Supply and Extract	4	4	Balanced	G4	43	n/a		300	n/a	None	A	80	Switch	Desk 0.75 to 0.85m	See Guidance Notes	n/a
		Quiet Room	1	10.0	Common room/staff room/lounge	H1107-01	28	18	Radiant Panels	Remote Sensor Adj.	Yes	Comfort Cooled Fresh Air	Central Supply and Extract	6	8	Negative	G4	43	41		300	n/a	None	A	80	Switch	Floor 0m	See Guidance Notes	n/a
		Store / Records	1	32.5	Storage Area Equipment	W1585-??	28	16	Radiant Panels	Remote Sensor Adj.	No	None	Central General Extract	0	3	Negative	None	43	n/a		200	n/a	None	A	80	Presence detection	Floor 0m	See Guidance Notes	n/a
		WC - Staff	1	3.0	Toilet	V1010	28	18	Adjacent Space Transfer Air	None	No	None	Central Dirty Extract	0	10	Negative	None	43	41		200	n/a	None	A	80	Presence detection	Floor 0m	See Guidance Notes	n/a
N1	DCN Entrance	Reception / Information Desk	1	6.0	Reception	J0132-01	28	18	Radiant Panels	Remote Sensor Adj.	Yes	Comfort Cooled Fresh Air	Central Supply Air	4	4	Balanced	G4	43	n/a		300	n/a	None	A	80	Switch	Desk 0.75 to 0.85m	See Guidance Notes	n/a
		Draught Lobby	1	9.0	Circulation Areas - Entrance Lobby	G0800-01	28	Not Controlled	Warm Air Door Curtain	BMS Adjustable Sensor	No	None	None	0	0	Balanced	None	n/a	n/a		200	n/a	None	A	80	Presence detection	Floor 0m	See Guidance Notes	n/a
		Waiting Area	1	8.0	Waiting Room	J1155	28	18	Radiant Panels	Remote Sensor Adj.	Yes	Comfort Cooled Fresh Air	Central Supply and Extract	5	5	Balanced	G4	43	n/a		300	n/a	None	A	80	Switch	Floor 0m	See Guidance Notes	n/a
		Vending Machine	1	3.0	Circulation Areas	P0808	28	18	underfloor heating / none to suit location	BMS Adjustable Sensor	No	None	to suit location	to suit location	to suit location	Balanced	G4	43	41		200	n/a	None	A	80	presence detection	Floor 0m	See Guidance Notes	n/a
		WC - Visitors	1	3.0	Toilet	V1010	28	18	Adjacent Space Transfer Air	None	No	None	Central Dirty Extract	0	10	Negative	None	43	41		200	n/a	None	A	80	Presence detection	Floor 0m	See Guidance Notes	n/a
		Wheelchair Bay	1	6.0	Circulation Equipment Storage Bays	G0180-02	28	16	Adjacent Space Transfer Air	None	No	None	Central General Extract	0	3	Negative	None	43	n/a		200	n/a	None	A	80	Presence detection	Floor 0m	See Guidance Notes	n/a
		WC - Wheelchair accessible	1	4.5	Toilet	V0922	28	18	Adjacent Space Transfer Air	None	No	None	Central Dirty Extract	0	10	Negative	None	43	41		200	n/a	None	A	80	Presence detection	Floor 0m	See Guidance Notes	n/a
N2	DCN Wards / Health Records Support - (N2)	Staff Room	1	34.0	Common room/staff room/lounge	D0608-03	28	18	Radiant Panels	Remote Sensor Adj.	Yes	Comfort Cooled Fresh Air	Central Supply and Extract	6	8	Negative	G4	43	41		300	n/a	None	A	80	Switch	Floor 0m	See Guidance Notes	n/a
		Disposal Hold (small)	1	4.0	Disposal Hold	Y0646	28	18	Adjacent Space Transfer Air	None	No	None	Central Dirty Extract	0	10	Negative	None	43	n/a		100	n/a	None	A	80	Presence detection	Floor 0m	See Guidance Notes	n/a
		Staff Reception / Office / Control Base	1	20.0	Reception	J0132-01	28	18	Radiant Panels	Remote Sensor Adj.	Yes	Comfort Cooled Fresh Air	Central Supply Air	4	4	Balanced	G4	43	n/a		300	n/a	None	A	80	Switch	Desk 0.75 to 0.85m	See Guidance Notes	n/a
		Reception	1	8.0	Reception	J0132-01	28	18	Radiant Panels	Remote Sensor Adj.	Yes	Comfort Cooled Fresh Air	Central Supply Air	4	4	Balanced	G4	43	n/a		300	n/a	None	A	80	Switch	Desk 0.75 to 0.85m	See Guidance Notes	n/a
		Multi-Disciplinary Office	1	18.0	Multi Disciplinary Work Areas	M0254	25	18	Radiant Panels	Remote Sensor Adj.	Yes	Comfort Cooled Fresh Air	Central Supply and Extract	4	4	Balanced	G4	43	n/a		300	n/a	None	A	80	Switch	Desk 0.75 to 0.85m	See Guidance Notes	n/a
		Main Waiting/Play Area	1	50.0	Waiting Room	J0132-02	28	18	Radiant Panels	Remote Sensor Adj.	Yes	Comfort Cooled Fresh Air	Central Supply and Extract	5	5	Balanced	G4	43	n/a		300	n/a	None	A	80	Switch	Floor 0m	See Guidance Notes	n/a
		WC - Wheelchair accessible	3	4.5	Toilet	V0922	28	18	Adjacent Space Transfer Air	None	No	None	Central Dirty Extract	0	10	Negative	None	43	41		200	n/a	None	A	80	Presence detection	Floor 0m	See Guidance Notes	n/a
		Single Rooms ensuite	3	15.0	Bathroom	V1643	28	20	Adjacent Space Transfer Air	None	No	None	Central Dirty Extract	0	10	Negative	None	43	41		200	n/a	None	A	80	Presence detection	Floor 0m	See Guidance Notes	n/a
		En Suite WC / WHB	3	4.5	Toilet	V1010	28	18	Adjacent Space Transfer Air	None	No	None	Central Dirty Extract	0	10	Negative	None	43	41		200	n/a	None	A	80	Presence detection	Floor 0m	See Guidance Notes	n/a
		Changing Cubicles	3	4.0	Changing Facilities	V0726	28	18	Radiant Panels	Remote Sensor Adj.	Yes	Comfort Cooled Fresh Air	Central Supply and Extract	6	10	positive to wc	G4	43	41		100	n/a	None	A	80	Presence detection	Floor 0m	See Guidance Notes	n/a
		Locker Bay	1	13.0	Changing Facilities	V0726	28	18	Radiant Panels	Remote Sensor Adj.	Yes	Comfort Cooled Fresh Air	Central Supply and Extract	6	10	positive to wc	G4	43	41		100	n/a	None	A	80	Presence detection	Floor 0m	See Guidance Notes	n/a
		Interview Rooms	2	12.0	Meeting Room	M0724	25	18	Radiant Panels	Remote Sensor Adj.	Yes	Ceiling Cassette - Chilled Water	Central Supply and Extract	10 l/s per person	10 l/s per person	Balanced	G4	43	n/a		300	n/a	None	A	80	Switch	Desk 0.75 to 0.85m	See Guidance Notes	n/a
		Consult/Examination	2	15.5	Consulting Room	C0224	28	18	Radiant Panels	Remote Sensor Adj.	Yes	Comfort Cooled Fresh Air	Central Supply and Extract	3	3	Balanced	G4	43	41		300	n/a	1000	A	80	Switch	Bed / Trolley 1.45m	See Guidance Notes	1
		Physical Measurement Bay	1	3.5	Consulting Room	C0522-02	28	18	Radiant Panels	Remote Sensor Adj.	Yes	Comfort Cooled Fresh Air	Central Supply and Extract	3	3	Balanced	G4	43	41		300	n/a	1000	A	80	Switch	Bed / Trolley 1.45m	See Guidance Notes	1
		Reception, administration office & communication base: 4 staff	1	24.0	Reception	J0132-01	28	18	Radiant Panels	Remote Sensor Adj.	Yes	Comfort Cooled Fresh Air	Central Supply Air	4	4	Balanced	G4	43	n/a		300	n/a	None	A	80	Switch	Desk 0.75 to 0.85m	See Guidance Notes	n/a
		Duty Room: 2 porters	1	5.0	Cellular / Ward Offices	M0251	25	18	Radiant Panels	Remote Sensor Adj.	Yes	Comfort Cooled Fresh Air	Central Supply and Extract	4	4	Balanced	G4	43	n/a		300	n/a	None	A	80	Switch	Desk 0.75 to 0.85m	See Guidance Notes	n/a
		Admissions Lounge	1	36.0	Common room/staff room/lounge	D2155	28	18	Radiant Panels	Remote Sensor Adj.	Yes	Comfort Cooled Fresh Air	Central Supply and Extract	6	8	Negative	G4	43	41		300	n/a	None	A	80	Switch	Floor 0m	See Guidance Notes	n/a
		WC & handwash: accessible, wheelchair assisted	1	4.5	Toilet	V0922	28	18	Adjacent Space Transfer Air	None	No	None	Central Dirty Extract	0	10	Negative	None	43	41		200	n/a	None	A	80	Presence detection	Floor 0m	See Guidance Notes	n/a
		Consulting, examination & changing room	3	15.5	Consulting Room	C0224	28	18	Radiant Panels	Remote Sensor Adj.	Yes	Comfort Cooled Fresh Air	Central Supply and Extract	3	3	Balanced	G4	43	41		300	n/a	1000	A	80	Switch	Bed / Trolley 1.45m	See Guidance Notes	1
		Interview, counselling & quiet room: 5 persons	1	9.0	Meeting Room	M0724	25	18	Radiant Panels	Remote Sensor Adj.	Yes	Ceiling Cassette - Chilled Water	Central Supply and Extract	10 l/s per person	10 l/s per person	Balanced	G4	43	n/a		300	n/a	None	A	80	Switch	Desk 0.75 to 0.85m	See Guidance Notes	n/a
		Changing Cubicle	1	4.0	Changing Facilities	V0726	28	18	Radiant Panels	Remote Sensor Adj.	Yes	Comfort Cooled Fresh Air	Central Supply and Extract	6	10	positive to wc	G4	43	41		100	n/a	None	A	80	Presence detection	Floor 0m	See Guidance Notes	n/a
		WC & handwash: accessible, wheelchair assisted	1	4.5	Toilet	V0922	28	18	Adjacent Space Transfer Air	None	No	None	Central Dirty Extract	0	10	Negative	None	43	41		200	n/a	None	A	80	Presence detection	Floor 0m	See Guidance Notes	n/a
		Immediate Pre Theatre Wait	1	50.0	Waiting Room	J0132-02	28	18	Radiant Panels	Remote Sensor Adj.	Yes	Comfort Cooled Fresh Air	Central Supply and Extract	5	5	Balanced	G4	43	n/a		300	n/a	None	A	80	Switch	Floor 0m	See Guidance Notes	n/a
		WC - Wheelchair accessible	3	4.5	Toilet	V0922	28	18	Adjacent Space Transfer Air	None	No	None	Central Dirty Extract	0	10	Negative	None	43	41		200	n/a	None	A	80	Presence detection	Floor 0m	See Guidance Notes	n/a
		Anaesthetic Room	8	19.0	Operating Theatre Suite	N0305	25	18	warm air via AHU Battery	Local / BMS Adjustable Sensor	Yes	Comfort Cooled Fresh Air	Central Supply and Extract	In line with SHTM 03-01	In line with SHTM 03-01		F7	43	41		500	n/a	10,000 - 100,000	A	80	Switch	Bed / Trolley 1.45m	See Guidance Notes	n/a
		Anaesthetic room: emergency operations	1	29.0	Operating Theatre Suite	N0305	25	18	warm air via AHU Battery	Local / BMS Adjustable Sensor	Yes	Comfort Cooled Fresh Air	Central Supply and Extract	In line with SHTM 03-01	In line with SHTM 03-01		F7	43	41		500	n/a	10,000 - 100,000	A	80	Switch	Bed / Trolley 1.45m	See Guidance Notes	n/a
		Operating Theatre	9	55.0	Operating Theatre Suite	N0106-01	25	18	warm air via AHU Battery	Local / BMS Adjustable Sensor	Yes	Comfort Cooled Fresh Air	Central Supply and Extract	In line with SHTM 03-01	In line with SHTM 03-01		F7	43	41		500	n/a	10,000 - 100,000	A	80	Switch	Bed / Trolley 1.45m	See Guidance Notes	n/a
		Minor Procedures Room	1	19.0	Operating Theatre Suite	N0106-01	25	18	warm air via AHU Battery	Local / BMS Adjustable Sensor	Yes	Comfort Cooled Fresh Air	Central Supply and Extract	In line with SHTM 03-01	In line with SHTM 03-01		F7	43	41		500	n/a	10,000 - 100,000	A	80	Switch	Bed / Trolley 1.45m	See Guidance Notes	n/a
		Scrub-up (single)	9	11.0	Operating Theatre Suite	N0224	25	18	warm air via AHU Battery	Local / BMS Adjustable Sensor	Yes	Comfort Cooled Fresh Air	Central Supply and Extract	In line with SHTM 03-01	In line with SHTM 03-01		F7	43	41		500	n/a	10,000 - 100,000	A	80	Switch	Bed / Trolley 1.45m	See Guidance Notes	n/a
		Preparation Room	10	12.0	Operating Theatre Suite	T0526	25	18	warm air via AHU Battery	Local / BMS Adjustable Sensor	Yes	Comfort Cooled Fresh Air	Central Supply and Extract	In line with SHTM 03-01	In line with SHTM 03-01		F7	43	41		500	n/a	10,000 - 100,000	A	80	Switch	Bed / Trolley 1.45m	See Guidance Notes	n/a
		Utility Room	5	14.0	Operating Theatre Suite	Y0431-01	25	18	warm air via AHU Battery	Local / BMS Adjustable Sensor	Yes	Comfort Cooled Fresh Air	Central Supply and Extract	In line with SHTM 03-01	In line with SHTM 03-01		F7	43	41		500	n/a	10,000 - 100,000	A	80	Switch	Bed / Trolley 1.45m	See Guidance Notes	n/a
		Exit Bay	5	12.0	Operating Theatre Suite	G0407	25	18	warm air via AHU Battery	Local / BMS Adjustable Sensor	Yes	Comfort Cooled Fresh Air	Central Supply and Extract	In line with SHTM 03-01	In line with SHTM 03-01		F7	43	41		500	n/a	10,000 - 100,000	A	80	Switch	Bed / Trolley 1.45m	See Guidance Notes	n/a

RHSC / DCN Environmental Matrix

Dept	Dept	Room Name	Qty		Room Function	ADB Code	Temp (max)	Temp (min)	Heating Type	Heating Control	Cooling (present)	Cooling (type)	Ventilation (type)	Supply (ac/hr)	Extract (ac/hr)	Relative pressure	Min filtration	Surface temp	Water temp	Safety Notes	Normal lux	Night lux	Local lux	Standby grade	Colour render	Control	Plane	Medical Location	
P1	Operating Theatres & RHSC Surgical Day Case Unit	MRI Room	1	45.0	Diagnostic room	E0801-02	25	18	Warm Air - Reheat Battery	BMS Adjustable Sensor	Yes	Comfort Cooled Fresh Air	Central Supply and Extract	to suit location	to suit location	Balanced	F7	43	41		300	n/a	1000	A	80	Switch / Dimmer	General working plane 1m	See Guidance Notes	1
		Control Room - MRI	1	16.0	Cellular / Ward Offices	E0604-03	25	18	Radiant Panels	Remote Sensor Adj.	Yes	Comfort Cooled Fresh Air	Central Supply and Extract	4	4	Balanced	G4	43	n/a		300	n/a	None	A	80	Switch	Desk 0.75 to 0.85m	See Guidance Notes	n/a
		Equipment Room - MRI	1	16.0	Storage Area Equipment	E0311	28	16	Radiant Panels	Remote Sensor Adj.	No	None	Central General Extract	0	3	Negative	None	43	n/a		200	n/a	None	A	80	Presence detection	Floor 0m	See Guidance Notes	n/a
		Trolley Bay	2	4.0	Circulation Equipment Storage Bays	J1264	28	16	Adjacent Space Transfer Air	None	No	None	Central General Extract	0	3	Negative	None	43	n/a		200	n/a	None	A	80	Presence detection	Floor 0m	See Guidance Notes	n/a
		Sub-Wait Area	1	4.5	Waiting Room	J0132-02	28	18	Radiant Panels	Remote Sensor Adj.	Yes	Comfort Cooled Fresh Air	Central Supply and Extract	5	5	Balanced	G4	43	n/a		300	n/a	None	A	80	Switch	Floor 0m	See Guidance Notes	n/a
		WC Accessible	1	4.5	Toilet	V0922	28	18	Adjacent Space Transfer Air	None	No	None	Central Dirty Extract	0	10	Negative	None	43	41		200	n/a	None	A	80	Presence detection	Floor 0m	See Guidance Notes	n/a
		Preparation Room	1	14.0	Operating Theatre Suite	T0526	25	18	warm air via AHU Battery	Local / BMS Adjustable Sensor	Yes	Comfort Cooled Fresh Air	Central Supply and Extract	In line with SHTM 03-01	In line with SHTM 03-01		F7	43	41		500	n/a	10,000 - 100,000	A	80	Switch	Bed / Trolley 1.45m	See Guidance Notes	n/a
		Anaesthetic Room	1	19.0	Operating Theatre Suite	N0305	25	18	warm air via AHU Battery	Local / BMS Adjustable Sensor	Yes	Comfort Cooled Fresh Air	Central Supply and Extract	In line with SHTM 03-01	In line with SHTM 03-01		F7	43	41		500	n/a	10,000 - 100,000	A	80	Switch	Bed / Trolley 1.45m	See Guidance Notes	n/a
		Angiography Procedures Room	1	55.0	Operating Theatre Suite	E0311	25	18	warm air via AHU Battery	Local / BMS Adjustable Sensor	Yes	Comfort Cooled Fresh Air	Central Supply and Extract	In line with SHTM 03-01	In line with SHTM 03-01		F7	43	41		500	n/a	10,000 - 100,000	A	80	Switch	Bed / Trolley 1.45m	See Guidance Notes	n/a
		Angiography Procedures Control Room	1	16.0	Operating Theatre Suite	X0216	25	18	warm air via AHU Battery	Local / BMS Adjustable Sensor	Yes	Comfort Cooled Fresh Air	Central Supply and Extract	In line with SHTM 03-01	In line with SHTM 03-01		F7	43	41		500	n/a	10,000 - 100,000	A	80	Switch	Bed / Trolley 1.45m	See Guidance Notes	n/a
		Angiography Procedures Machine Room	1	16.0	Operating Theatre Suite	E0311	25	18	warm air via AHU Battery	Local / BMS Adjustable Sensor	Yes	Comfort Cooled Fresh Air	Central Supply and Extract	In line with SHTM 03-01	In line with SHTM 03-01		F7	43	41		500	n/a	10,000 - 100,000	A	80	Switch	Bed / Trolley 1.45m	See Guidance Notes	n/a
		Preparation Room	1	12.0	Operating Theatre Suite	T0526	25	18	warm air via AHU Battery	Local / BMS Adjustable Sensor	Yes	Comfort Cooled Fresh Air	Central Supply and Extract	In line with SHTM 03-01	In line with SHTM 03-01		F7	43	41		500	n/a	10,000 - 100,000	A	80	Switch	Bed / Trolley 1.45m	See Guidance Notes	n/a
		Sterile Supplies Store	1	12.0	Clean Utility	T0101	28	18	Radiant Panels	Remote Sensor Adj.	Yes	Comfort Cooled Fresh Air	Central Supply Air	6	0	Positive	G4	43	41		150	n/a	None	A	80	Presence detection	General working plane 1m	See Guidance Notes	n/a
		X-Ray/Ultrasound Bay	1	4.0	Circulation Equipment Storage Bays	G0180-06	28	16	Adjacent Space Transfer Air	None	No	None	Central General Extract	0	3	Negative	None	43	n/a		200	n/a	None	A	80	Presence detection	Floor 0m	See Guidance Notes	n/a
		Image Intensifier Bay	3	4.0	Circulation Equipment Storage Bays	G0180-06	28	16	Adjacent Space Transfer Air	None	No	None	Central General Extract	0	3	Negative	None	43	n/a		200	n/a	None	A	80	Presence detection	Floor 0m	See Guidance Notes	n/a
		Satellite Pharmacy Store	1	6.0	Clean Utility	T0526-01	28	18	Radiant Panels	Remote Sensor Adj.	Yes	Comfort Cooled Fresh Air	Central Supply Air	6	0	Positive	G4	43	41		150	n/a	None	A	80	Presence detection	General working plane 1m	See Guidance Notes	n/a
		Sterile Supplies Store	1	94.0	Clean Utility	T0526-?	28	18	Radiant Panels	Remote Sensor Adj.	Yes	Comfort Cooled Fresh Air	Central Supply Air	6	0	Positive	G4	43	41		150	n/a	None	A	80	Presence detection	General working plane 1m	See Guidance Notes	n/a
		Clinical Equipment Store	1	60.0	Storage Area Equipment	W1585	28	16	Radiant Panels	Remote Sensor Adj.	No	None	Central General Extract	0	3	Negative	None	43	n/a		200	n/a	None	A	80	Presence detection	Floor 0m	See Guidance Notes	n/a
		Clinical Equipment Store	1	30.0	Storage Area Equipment	W1585	28	16	Radiant Panels	Remote Sensor Adj.	No	None	Central General Extract	0	3	Negative	None	43	n/a		200	n/a	None	A	80	Presence detection	Floor 0m	See Guidance Notes	n/a
		Linen Bay	2	1.5	Linen Bay	W1594-01	28	16	Adjacent Space Transfer Air	None	No	None	Central Extract	0	3	Negative	None	43	n/a		200	n/a	None	A	80	Presence detection	Floor 0m	See Guidance Notes	n/a
		Linen Bay	1	1.5	Linen Bay	W1594-01	28	16	Adjacent Space Transfer Air	None	No	None	Central Extract	0	3	Negative	None	43	n/a		200	n/a	None	A	80	Presence detection	Floor 0m	See Guidance Notes	n/a
		Dirty Scopes Store	1	6.0	Dirty utility	Y0431	28	18	Adjacent Space Transfer Air	None	No	None	Central Dirty Extract	0	6	Negative	None	43	41		200	n/a	None	A	80	Presence detection	Floor 0m	See Guidance Notes	n/a
		Decontaminated Scopes Store	1	8.0	Dirty utility	Y0431	28	18	Adjacent Space Transfer Air	None	No	None	Central Dirty Extract	0	6	Negative	None	43	41		200	n/a	None	A	80	Presence detection	Floor 0m	See Guidance Notes	n/a
		Medical Gas Cylinder Store	1	4.0	Storage Area Med Gas	W1585-??	28	16	Frost protection	Room Thermostat	No	None	Natural ventilation	0	0	n/a	None	n/a	n/a		200	n/a	None	A	80	Presence detection	Floor 0m	See Guidance Notes	n/a
		DSR	2	7.0	DSR	Y1510	28	18	Adjacent Space Transfer Air	None	No	None	Central Dirty Extract	0	6	Negative	None	43	60		100	n/a	None	A	90	Presence detection	Floor 0m	See Guidance Notes	n/a
		Disposal Hold	1	15.0	Disposal Hold	Y0646	28	18	Adjacent Space Transfer Air	None	No	None	Central Dirty Extract	0	10	Negative	None	43	n/a		100	n/a	None	A	90	Presence detection	Floor 0m	See Guidance Notes	n/a
		Disposal Hold	1	10.0	Disposal Hold	Y0646	28	18	Adjacent Space Transfer Air	None	No	None	Central Dirty Extract	0	10	Negative	None	43	n/a		100	n/a	None	A	90	Presence detection	Floor 0m	See Guidance Notes	n/a
		Store - Plaster	1	6.0	Storage Area Equipment	W1585-??	28	16	Radiant Panels	TRV Remote Head Adj.	No	None	Central General Extract	0	3	Negative	None	43	n/a		200	n/a	None	A	80	Presence detection	Floor 0m	See Guidance Notes	n/a
		Resuscitation Trolley Bay	1	1.0	Resus Trolley bay	G0180-01	28	18	Adjacent Space Transfer Air	None	No	None	None	0	0	n/a	None	43	n/a		500	n/a	None	A	90	Switch	Bed / Trolley 1.45m	See Guidance Notes	n/a
		Parking bay: fibre optic bronchoscope light source trolley DCN	1	1.0	Circulation Equipment Storage Bays	G0180-06	28	16	Adjacent Space Transfer Air	None	No	None	Central General Extract	0	3	Negative	None	43	n/a		200	n/a	None	A	80	Presence detection	Floor 0m	See Guidance Notes	n/a
		Trolley Holding Bay Clean	1	12.0	Circulation Equipment Storage Bays	J1624	28	16	Adjacent Space Transfer Air	None	No	None	Central General Extract	0	3	Negative	None	43	n/a		200	n/a	None	A	80	Presence detection	Floor 0m	See Guidance Notes	n/a
		IPS Room	1	1.5	IPS Room	Engineering	Manufacturer Dependant	Manufacturer Dependant	None	None	No	None	Central General Extract	0	3	Negative	None	43	n/a	0	n/a	n/a	None	A	80	Presence detection	Floor 0m	See Guidance Notes	n/a
		IPS Room	1	1.8	IPS Room	Engineering	Manufacturer Dependant	Manufacturer Dependant	None	None	No	None	Central Supply and Extract	0	3	Negative	None	43	n/a	0	n/a	n/a	None	A	80	Presence detection	Floor 0m	See Guidance Notes	n/a
		Trolley Holding Bay Dirty	2	6.0	Circulation Equipment Storage Bays	J1624	28	16	Adjacent Space Transfer Air	None	No	None	Central General Extract	0	3	Negative	None	43	n/a		200	n/a	None	A	80	Presence detection	Floor 0m	See Guidance Notes	n/a
		Laser Printer / CR Room DCN	1	15.0	Cellular / Ward Offices	M0251	25	18	Radiant Panels	Remote Sensor Adj.	Yes	Comfort Cooled Fresh Air	Central Supply and Extract	4	4	Balanced	G4	43	n/a		300	n/a	None	A	80	Switch	Desk 0.75 to 0.85m	See Guidance Notes	n/a
		Post Anaesthetic Recovery	1	145.8	Recovery Bay / Recovery Room	B2417	28	20	Radiant Panels	Remote Sensor Adj.	Yes	Comfort Cooled Fresh Air	Central Supply and Extract	15	15	Balanced	G4	43	41		500	n/a	1000	A	80	Switch / Dimmer	Bed / Trolley 1.45m	See Guidance Notes	n/a
		Recovery Staff Base	1	12.0	Cellular / Ward Offices	M0254	25	18	Radiant Panels	Remote Sensor Adj.	Yes	Comfort Cooled Fresh Air	Central Supply and Extract	4	4	Balanced	G4	43	n/a		300	n/a	None	A	80	Switch	Desk 0.75 to 0.85m	See Guidance Notes	n/a
		Recovery Clean Utility	1	12.0	Clean Utility	T0101	28	18	Radiant Panels	Remote Sensor Adj.	Yes	Comfort Cooled Fresh Air	Central Supply Air	6	0	Positive	G4	43	41		150	n/a	None	A	80	Presence detection	General working plane 1m	See Guidance Notes	n/a
		Recovery Dirty Utility	1	14.0	Dirty utility	Y0431	28	18	Adjacent Space Transfer Air	None	No	None	Central Dirty Extract	0	6	Negative	None	43	41		200	n/a	None	A	80	Presence detection	Floor 0m	See Guidance Notes	n/a
		SDCU Dispensary	1	8.0	Clean Utility	T0526-?	28	18	Radiant Panels	Remote Sensor Adj.	Yes	Comfort Cooled Fresh Air	Central Supply Air	6	0	Positive	G4	43	41		150	n/a	None	A	80	Presence detection	General working plane 1m	See Guidance Notes	n/a
		SDCU Recovery	1	110.0	Recovery Bay / Recovery Room	B2517	28	20	Radiant Panels	Remote Sensor Adj.	Yes	Comfort Cooled Fresh Air	Central Supply and Extract	15	15	Balanced	G4	43	41		500	n/a	1000	A	80	Switch / Dimmer	Bed / Trolley 1.45m	See Guidance Notes	n/a
		SDCU Discharge Lounge	1	40.0	Common room/staff room/lounge	D1135	28	18	Radiant Panels	Remote Sensor Adj.	Yes	Comfort Cooled Fresh Air	Central Supply and Extract	6	8	Negative	G4	43	41		300	n/a	None	A	80	Switch	Floor 0m	See Guidance Notes	n/a
		Pantry (DCU)	1	8.0	Pantry	P0627	28	18	Radiant Panels	Remote Sensor Adj.	Yes	Comfort Cooled Fresh Air	Central Supply and Extract	6	8	Negative	G4	43	41		300	n/a	None	A	80	Switch	Floor 0m	See Guidance Notes	n/a
		SDCU Post Op Staff Base/Utility	1	10.0	staff base	T0151-??	28	18	Radiant Panels	Remote Sensor Adj.	No	None	Central Supply and Extract	10l/s/per person	10l/s/per person	Balanced	G4	n/a	n/a		200/300	n/a	None	A	80	Switch / Dimmer	Desk 0.75 to 0.85m	See Guidance Notes	n/a
		Wheelchair Parking Bay	1	1.5	Circulation Equipment Storage Bays	G0180-02	28	16	Adjacent Space Transfer Air	None	No	None	Central General Extract	0	3	Negative	None	43	n/a		200	n/a	None	A	80	Presence detection	Floor 0m	See Guidance Notes	n/a
		Interview Room - DCU	2	9.0	Meeting Room	M0724	25	18	Radiant Panels	Remote Sensor Adj.	Yes	Ceiling Cassette - Chilled Water	Central Supply and Extract	10 l/s per person	10 l/s per person	Balanced	G4	43	n/a		300	n/a	None	A	80	Switch	Desk 0.75 to 0.85m	See Guidance Notes	n/a
		Charge Nurse Office	1	9.0	Cellular / Ward Offices	M0251	25	18	Radiant Panels	Remote Sensor Adj.	Yes	Comfort Cooled Fresh Air	Central Supply and Extract	4	4	Balanced	G4	43	n/a		300	n/a	None	A	80	Switch	Desk 0.75 to 0.85m	See Guidance Notes	n/a
		WC - Patients	1	3.0	Toilet	V1010	28	18	Adjacent Space Transfer Air	None	No	None	Central Dirty Extract	0	10	Negative	None	43	41		200	n/a	None	A	80	Presence detection	Floor 0m	See Guidance Notes	n/a
		WC - Wheelchair accessible	1	4.5	Toilet	V0922	28	18	Adjacent Space Transfer Air	None	No	None	Central Dirty Extract	0	10	Negative	None	43	41		200	n/a	None	A	80	Presence detection	Floor 0m	See Guidance Notes	n/a
		Recovery bay: post anaesthetic, 1 place	6	13.5	Recovery Bay / Recovery Room	B2417-01	28	20	Radiant Panels	Remote Sensor Adj.	Yes	Comfort Cooled Fresh Air	Central Supply and Extract	15	15	Balanced	G4	43	41		500	n/a	1000	A	80	Switch / Dimmer	Bed / Trolley 1.45m	See Guidance Notes	n/a
		Recovery room: post anaesthetic, 1 place	2	26.0	Recovery Bay / Recovery Room	B2417-01	28	20	Radiant Panels	Remote Sensor Adj.	Yes	Comfort Cooled Fresh Air	Central Supply and Extract	15	15	Balanced	G4	43	41		500	n/a	1000	A	80	Switch / Dimmer	Bed / Trolley 1.45m	See Guidance Notes	n/a
		Staff and communication base, enclosed 3 staff	1	12.0	Cellular / Ward Offices	M0251	25	18	Radiant Panels	Remote Sensor Adj.	Yes	Comfort Cooled Fresh Air	Central Supply and Extract	4	4	Balanced	G4	43	n/a		300	n/a	None	A	80	Switch	Desk 0.75 to 0.85m	See Guidance Notes	n/a
		Clean Utility	1	12.0	Clean Utility	T0101	28	18	Radiant Panels	Remote Sensor Adj.	Yes	Comfort Cooled Fresh Air	Central Supply Air	6	0	Positive	G4	43	41		150	n/a	None	A	80	Presence detection	General working plane 1m	See Guidance Notes	n/a
		Dirty Utility: bedpan disposal & urine test	1	14.0	Dirty utility	Y0431	28	18	Adjacent Space Transfer Air	None	No	None	Central Dirty Extract	0	6	Negative	None	43	41		200	n/a	None	A	80	Presence detection	Floor 0m	See Guidance Notes	n/a
		Staff Room	1	60.0	Common room/staff room/lounge	D0608-03	28	18	Radiant Panels	Remote Sensor Adj.	Yes	Comfort Cooled Fresh Air	Central Supply and Extract	6	8	Negative	G4	43	41		300	n/a	None	A	80	Switch	Floor 0m	See Guidance Notes	n/a

RHSC / DCN Environmental Matrix

Dept	Dept	Room Name	Qty		Room Function	ADB Code	Temp (max)	Temp (min)	Heating Type	Heating Control	Cooling (present)	Cooling (type)	Ventilation (type)	Supply (ac/hr)	Extract (ac/hr)	Relative pressure	Min filtration	Surface temp	Water temp	Safety Notes	Normal lux	Night lux	Local lux	Standby grade	Colour render	Control	Plane	Medical Location	
		Dictation/ 1:1/Phone Booth	4	4.2	Cellular / Ward Offices	M0251-01	25	18	Radiant Panels	Remote Sensor Adj.	Yes	Comfort Cooled Fresh Air	Central Supply and Extract	4	4	Balanced	G4	43	n/a		300	n/a	None	A	80	Switch	Desk 0.75 to 0.85m	See Guidance Notes	n/a
		Office Senior Nurse Theatres	1	9.0	Cellular / Ward Offices	M0251	25	18	Radiant Panels	Remote Sensor Adj.	Yes	Comfort Cooled Fresh Air	Central Supply and Extract	4	4	Balanced	G4	43	n/a		300	n/a	None	A	80	Switch	Desk 0.75 to 0.85m	See Guidance Notes	n/a
		Office Staff	1	16.0	Cellular / Ward Offices	M0251	25	18	Radiant Panels	Remote Sensor Adj.	Yes	Comfort Cooled Fresh Air	Central Supply and Extract	4	4	Balanced	G4	43	n/a		300	n/a	None	A	80	Switch	Desk 0.75 to 0.85m	See Guidance Notes	n/a
		Charge Nurse Office	1	9.0	Cellular / Ward Offices	M0251	25	18	Radiant Panels	Remote Sensor Adj.	Yes	Comfort Cooled Fresh Air	Central Supply and Extract	4	4	Balanced	G4	43	n/a		300	n/a	None	A	80	Switch	Desk 0.75 to 0.85m	See Guidance Notes	n/a
		WC-Staff	2	3.0	Toilet	V1010	28	18	Adjacent Space Transfer Air	None	No	None	Central Dirty Extract	0	10	Negative	None	43	41		200	n/a	None	A	80	Presence detection	Floor 0m	See Guidance Notes	n/a
		Male Staff Changing and Lockers	1	60.0	Changing Facilities	V0726	28	18	Radiant Panels	Remote Sensor Adj.	Yes	Comfort Cooled Fresh Air	Central Supply and Extract	6	10	positive to wc	G4	43	41		100	n/a	None	A	80	Presence detection	Floor 0m	See Guidance Notes	n/a
		Female Staff Changing and Lockers	1	70.0	Changing Facilities	V0726	28	18	Radiant Panels	Remote Sensor Adj.	Yes	Comfort Cooled Fresh Air	Central Supply and Extract	6	10	positive to wc	G4	43	41		100	n/a	None	A	80	Presence detection	Floor 0m	See Guidance Notes	n/a
		Footwear Machine Washing Area	1	4.0	Dirty utility	Y0431	28	18	Adjacent Space Transfer Air	None	No	None	Central Dirty Extract	0	6	Negative	None	43	41		200	n/a	None	A	80	Presence detection	Floor 0m	See Guidance Notes	n/a
		General X-Ray Room	2	33.0	Diagnostic room	E0128	25	18	Warm Air - Reheat Battery	BMS Adjustable Sensor	Yes	Comfort Cooled	Central Supply and Extract	to suit location	to suit location	Balanced	F7	43	41		300	n/a	1000	A	80	Switch / Dimmer	General working plane 1m	See Guidance Notes	1
		Changing Cubicles	5	4.0	Changing Facilities	V0726	28	18	Radiant Panels	Remote Sensor Adj.	Yes	Comfort Cooled Fresh Air	Central Supply and Extract	6	10	positive to wc	G4	43	41		100	n/a	None	A	80	Presence detection	Floor 0m	See Guidance Notes	n/a
		Screening Room (fluoroscopy)	1	39.0	Diagnostic room	E0218-01	25	18	Warm Air - Reheat Battery	BMS Adjustable Sensor	Yes	Comfort Cooled	Central Supply and Extract	to suit location	to suit location	Balanced	F7	43	41		300	n/a	1000	A	80	Switch / Dimmer	General working plane 1m	See Guidance Notes	1
		Preparation Room	1	10.0	Consulting Room	T0526-?	28	18	Radiant Panels	Remote Sensor Adj.	Yes	Comfort Cooled Fresh Air	Central Supply and Extract	3	3	Balanced	G4	43	41		300	n/a	1000	A	80	Switch	Bed / Trolley 1.45m	See Guidance Notes	1
		Ultrasound Room	2	16.0	Diagnostic room	E0115	25	18	Warm Air - Reheat Battery	BMS Adjustable Sensor	Yes	Comfort Cooled	Central Supply and Extract	to suit location	to suit location	Balanced	F7	43	41		300	n/a	1000	A	80	Switch / Dimmer	General working plane 1m	See Guidance Notes	1
		Dental Room	1	20.0	Consulting Room	E0135	28	18	Radiant Panels	Remote Sensor Adj.	Yes	Comfort Cooled Fresh Air	Central Supply and Extract	3	3	Balanced	G4	43	41		300	n/a	1000	A	80	Switch	Bed / Trolley 1.45m	See Guidance Notes	1
		Main Reporting	1	25.0	Cellular / Ward Offices	M0251	25	18	Radiant Panels	Remote Sensor Adj.	Yes	Comfort Cooled Fresh Air	Central Supply and Extract	4	4	Balanced	G4	43	n/a		300	n/a	None	A	80	Switch	Desk 0.75 to 0.85m	See Guidance Notes	n/a
		Acute Reporting	1	10.0	Cellular / Ward Offices	M0251	25	18	Radiant Panels	Remote Sensor Adj.	Yes	Comfort Cooled Fresh Air	Central Supply and Extract	4	4	Balanced	G4	43	n/a		300	n/a	None	A	80	Switch	Desk 0.75 to 0.85m	See Guidance Notes	n/a
		MRI Reporting	1	10.0	Cellular / Ward Offices	M0251	25	18	Radiant Panels	Remote Sensor Adj.	Yes	Comfort Cooled Fresh Air	Central Supply and Extract	4	4	Balanced	G4	43	n/a		300	n/a	None	A	80	Switch	Desk 0.75 to 0.85m	See Guidance Notes	n/a
		Processing Area	1	30.0	Diagnostic room	M0251	25	18	Warm Air - Reheat Battery	BMS Adjustable Sensor	Yes	Comfort Cooled	Central Supply and Extract	to suit location	to suit location	Balanced	F7	43	41		300	n/a	1000	A	80	Switch / Dimmer	General working plane 1m	See Guidance Notes	1
		Gamma Camera	2	40.0	Diagnostic room	E0176	25	18	Warm Air - Reheat Battery	BMS Adjustable Sensor	Yes	Comfort Cooled	Central Supply and Extract	to suit location	to suit location	Balanced	F7	43	41		300	n/a	1000	A	80	Switch / Dimmer	General working plane 1m	See Guidance Notes	1
		Gamma Camera Control Area	1	17.0	Consulting Room	E0604-04	28	18	Radiant Panels	Remote Sensor Adj.	Yes	Comfort Cooled Fresh Air	Central Supply and Extract	3	3	Balanced	G4	43	41		300	n/a	1000	A	80	Switch	Bed / Trolley 1.45m	See Guidance Notes	1
		Radioactive Waste Store	1	2.0	Storage Area Equipment	W1585-??	28	16	Radiant Panels	Remote Sensor Adj.	No	None	Central General Extract	0	3	Negative	None	43	n/a		200	n/a	None	A	80	Presence detection	Floor 0m	See Guidance Notes	n/a
		WC Ambulant (Hot)	2	4.5	Toilet	V0922-03	28	18	Adjacent Space Transfer Air	None	No	None	Central Dirty Extract	0	10	Negative	None	43	41		200	n/a	None	A	80	Presence detection	Floor 0m	See Guidance Notes	n/a
		Injection Room	2	8.0	Consulting Room	E0715	28	18	Radiant Panels	Remote Sensor Adj.	Yes	Comfort Cooled Fresh Air	Central Supply and Extract	3	3	Balanced	G4	43	41		300	n/a	1000	A	80	Switch	Bed / Trolley 1.45m	See Guidance Notes	1
		Preparation Room	1	14.0	Consulting Room	T0526-?	28	18	Radiant Panels	Remote Sensor Adj.	Yes	Comfort Cooled Fresh Air	Central Supply and Extract	3	3	Balanced	G4	43	41		300	n/a	1000	A	80	Switch	Bed / Trolley 1.45m	See Guidance Notes	1
		Hot Waiting Area	2	10.0	Waiting Room	J0132-02	28	18	Radiant Panels	Remote Sensor Adj.	Yes	Comfort Cooled Fresh Air	Central Supply and Extract	5	5	Balanced	G4	43	n/a		300	n/a	None	A	80	Switch	Floor 0m	See Guidance Notes	n/a
		Cold Waiting Area	2	10.0	Waiting Room	J0132-02	28	18	Radiant Panels	Remote Sensor Adj.	Yes	Comfort Cooled Fresh Air	Central Supply and Extract	5	5	Balanced	G4	43	n/a		300	n/a	None	A	80	Switch	Floor 0m	See Guidance Notes	n/a
		Stress Room (myocardial work)	1	14.0	Consulting Room	C0224-04	28	18	Radiant Panels	Remote Sensor Adj.	Yes	Comfort Cooled Fresh Air	Central Supply and Extract	3	3	Balanced	G4	43	41		300	n/a	1000	A	80	Switch	Bed / Trolley 1.45m	See Guidance Notes	1
		Changing Cubicles	2	4.0	Changing Facilities	V0726	28	18	Radiant Panels	Remote Sensor Adj.	Yes	Comfort Cooled Fresh Air	Central Supply and Extract	6	10	positive to wc	G4	43	41		100	n/a	None	A	80	Presence detection	Floor 0m	See Guidance Notes	n/a
		Counting Laboratory	1	14.0	Laboratory	L1804	25	18	Radiant Panels	Remote Sensor Adj.	Yes	Ceiling Cassette - Chilled Water	Central Supply and Extract	6	6	Balanced	F7	43	60		500	n/a	None	A	80	Switch	Desk 0.75 to 0.85m	See Guidance Notes	n/a
		Beverage Bay	1	3.0	Tea Making	P0625	28	18	Adjacent Space Transfer Air	None	No	None	Central General Extract	0	5	Negative	None	43	41		200	n/a	None	A	80	switch	Floor 0m	See Guidance Notes	n/a
		Admin Office	1	10.0	Cellular / Ward Offices	M0251	25	18	Radiant Panels	Remote Sensor Adj.	Yes	Comfort Cooled Fresh Air	Central Supply and Extract	4	4	Balanced	G4	43	n/a		300	n/a	None	A	80	Switch	Desk 0.75 to 0.85m	See Guidance Notes	n/a
		WC Ambulant (Cold)	1	4.5	Toilet	V1010	28	18	Adjacent Space Transfer Air	None	No	None	Central Dirty Extract	0	10	Negative	None	43	41		200	n/a	None	A	80	Presence detection	Floor 0m	See Guidance Notes	n/a
		Recovery Area	1	15.0	Recovery Bay / Recovery Room	C0522-04	28	20	Radiant Panels	Remote Sensor Adj.	Yes	Comfort Cooled Fresh Air	Central Supply and Extract	15	15	Balanced	G4	43	41		500	n/a	1000	A	80	Switch / Dimmer	Bed / Trolley 1.45m	See Guidance Notes	n/a
		Gamma Camera Reporting	1	10.0	Cellular / Ward Offices	M0251	25	18	Radiant Panels	Remote Sensor Adj.	Yes	Comfort Cooled Fresh Air	Central Supply and Extract	4	4	Balanced	G4	43	n/a		300	n/a	None	A	80	Switch	Desk 0.75 to 0.85m	See Guidance Notes	n/a
		Medical Physics Office	1	10.0	Cellular / Ward Offices	M0251	25	18	Radiant Panels	Remote Sensor Adj.	Yes	Comfort Cooled Fresh Air	Central Supply and Extract	4	4	Balanced	G4	43	n/a		300	n/a	None	A	80	Switch	Desk 0.75 to 0.85m	See Guidance Notes	n/a
		Emergency Shower	1	2.5	Bathroom	V1643-01	28	20	Adjacent Space Transfer Air	None	No	None	Central Dirty Extract	0	10	Negative	None	43	41		200	n/a	None	A	80	Presence detection	Floor 0m	See Guidance Notes	n/a
		Reception Area	1	8.0	Reception	J0132-01	28	18	Radiant Panels	Remote Sensor Adj.	Yes	Comfort Cooled Fresh Air	Central Supply Air	4	4	Balanced	G4	43	n/a		300	n/a	None	A	80	Switch	Desk 0.75 to 0.85m	See Guidance Notes	n/a
		Admin Office	1	10	Cellular / Ward Offices	M0251	25	18	Radiant Panels	Remote Sensor Adj.	Yes	Comfort Cooled Fresh Air	Central Supply and Extract	4	4	Balanced	G4	43	n/a		300	n/a	None	A	80	Switch	Desk 0.75 to 0.85m	See Guidance Notes	n/a
		Waiting Area - Main Dept	1	50.0	Waiting Room	J0132-02	28	18	Radiant Panels	Remote Sensor Adj.	Yes	Comfort Cooled Fresh Air	Central Supply and Extract	5	5	Balanced	G4	43	n/a		300	n/a	None	A	80	Switch	Floor 0m	See Guidance Notes	n/a
		Baby Infant / Feeding Room	1	4.0	Baby Feeding	S0012	25	18	Radiant Panels	Remote Sensor Adj.	No	None	Central Supply Air	5	0	Positive	G4	43	41		100	n/a	None	A	80	Presence detection	Floor 0m	See Guidance Notes	n/a
		Nappy Change Room with handwash	1	4.0	Toilet	V1131	28	18	Adjacent Space Transfer Air	None	No	None	Central Dirty Extract	0	10	Negative	None	43	41		200	n/a	None	A	80	Presence detection	Floor 0m	See Guidance Notes	n/a
		WC - Wheelchair accessible	2	4.5	Toilet	V0922	28	18	Adjacent Space Transfer Air	None	No	None	Central Dirty Extract	0	10	Negative	None	43	41		200	n/a	None	A	80	Presence detection	Floor 0m	See Guidance Notes	n/a
		Resuscitation Trolley Bay	1	1.0	Circulation Equipment Storage Bays	G0180-01	28	16	Adjacent Space Transfer Air	None	No	None	Central General Extract	0	3	Negative	None	43	n/a		200	n/a	None	A	80	Presence detection	Floor 0m	See Guidance Notes	n/a
		Reception	1	8.0	Reception	J0132-01	28	18	Radiant Panels	Remote Sensor Adj.	Yes	Comfort Cooled Fresh Air	Central Supply Air	4	4	Balanced	G4	43	n/a		300	n/a	None	A	80	Switch	Desk 0.75 to 0.85m	See Guidance Notes	n/a
		Admin Office	1	28.7	Cellular / Ward Offices	M0251	25	18	Radiant Panels	Remote Sensor Adj.	Yes	Comfort Cooled Fresh Air	Central Supply and Extract	4	4	Balanced	G4	43	n/a		300	n/a	None	A	80	Switch	Desk 0.75 to 0.85m	See Guidance Notes	n/a
		Waiting Area	1	35.0	Waiting Room	J0132-02	28	18	Radiant Panels	Remote Sensor Adj.	Yes	Comfort Cooled Fresh Air	Central Supply and Extract	5	5	Balanced	G4	43	n/a		300	n/a	None	A	80	Switch	Floor 0m	See Guidance Notes	n/a
		WC - Patients	1	3.0	Toilet	V1010	28	18	Adjacent Space Transfer Air	None	No	None	Central Dirty Extract	0	10	Negative	None	43	41		200	n/a	None	A	80	Presence detection	Floor 0m	See Guidance Notes	n/a
		WC - Wheelchair accessible	1	4.5	Toilet	V0922	28	18	Adjacent Space Transfer Air	None	No	None	Central Dirty Extract	0	10	Negative	None	43	41		200	n/a	None	A	80	Presence detection	Floor 0m	See Guidance Notes	n/a
		Acute Reporting	1	25.0	Cellular / Ward Offices	M0251	25	18	Radiant Panels	Remote Sensor Adj.	Yes	Comfort Cooled Fresh Air	Central Supply and Extract	4	4	Balanced	G4	43	n/a		300	n/a	None	A	80	Switch	Desk 0.75 to 0.85m	See Guidance Notes	n/a
		Quiet Reporting	1	20.0	Cellular / Ward Offices	M0251	25	18	Radiant Panels	Remote Sensor Adj.	Yes	Comfort Cooled Fresh Air	Central Supply and Extract	4	4	Balanced	G4	43	n/a		300	n/a	None	A	80	Switch	Desk 0.75 to 0.85m	See Guidance Notes	n/a
		Teleradiology Reporting	1	12.0	Cellular / Ward Offices	M0251	25	18	Radiant Panels	Remote Sensor Adj.	Yes	Comfort Cooled Fresh Air	Central Supply and Extract	4	4	Balanced	G4	43	n/a		300	n/a	None	A	80	Switch	Desk 0.75 to 0.85m	See Guidance Notes	n/a
		Doppler Ultrasound	1	16.0	Diagnostic room	E0113	25	18	Warm Air - Reheat Battery	BMS Adjustable Sensor	Yes	Comfort Cooled	Central Supply and Extract	to suit location	to suit location	Balanced	F7	43	41		300	n/a	1000	A	80	Switch / Dimmer	General working plane 1m	See Guidance Notes	1
		Ultrasound Admin Office	1	15.0	Cellular / Ward Offices	M0251	25	18	Radiant Panels	Remote Sensor Adj.	Yes	Comfort Cooled Fresh Air	Central Supply and Extract	4	4	Balanced	G4	43	n/a		300	n/a	None	A	80	Switch	Desk 0.75 to 0.85m	See Guidance Notes	n/a
		Resuscitation Trolley Bay	1	1.0	Circulation Equipment Storage Bays	G0180-01	28	16	Adjacent Space Transfer Air	None	No	None	Central General Extract	0	3	Negative	None	43	n/a		200	n/a	None	A	80	Presence detection	Floor 0m	See Guidance Notes	n/a
		Waiting Play Area	1	10.0	Waiting Room	J0132-02	28	18	Radiant Panels	Remote Sensor Adj.	Yes	Comfort Cooled Fresh Air	Central Supply and Extract	5	5	Balanced	G4	43	n/a		300	n/a	None	A	80	Switch	Floor 0m	See Guidance Notes	n/a
		Patient Interview Room	1	9.0	Meeting Room	M0724	25	18	Radiant Panels	Remote Sensor Adj.	Yes	Ceiling Cassette - Chilled Water	Central Supply and Extract	10 l/s per person	10 l/s per person	Balanced	G4	43	n/a		300	n/a	None	A	80	Switch	Desk 0.75 to 0.85m	See Guidance Notes	n/a
		Dirty Utility	1	9.0	Dirty utility	Y0431	28	18	Adjacent Space Transfer Air	None	No	None	Central Dirty Extract	0	6	Negative	None	43	41		200	n/a	None	A	80	Presence detection	Floor 0m	See Guidance Notes	n/a

RHSC / DCN Environmental Matrix

Dept	Dept	Room Name	Qty		Room Function	ADB Code	Temp (max)	Temp (min)	Heating Type	Heating Control	Cooling (present)	Cooling (type)	Ventilation (type)	Supply (ac/hr)	Extract (ac/hr)	Relative pressure	Min filtration	Surface temp	Water temp	Safety Notes	Normal lux	Night lux	Local lux	Standby grade	Colour render	Control	Plane	Medical Location	
Q1	Radiology	Store Room	1	20.0	Storage Area Equipment	W1585-??	28	16	Radiant Panels	Remote Sensor Adj.	No	None	Central General Extract	0	3	Negative	None	43	n/a		200	n/a	None	A	80	Presence detection	Floor 0m	See Guidance Notes	n/a
		Disposal Hold	2	10.0	Disposal Hold	Y0646	28	18	Adjacent Space Transfer Air	None	No	None	Central Dirty Extract	0	10	Negative	None	43	n/a		100	n/a	None	A	90	Presence detection	Floor 0m	See Guidance Notes	n/a
		DSR	1	7.0	DSR	Y1510	28	18	Adjacent Space Transfer Air	None	No	None	Central Dirty Extract	0	6	Negative	None	43	60		100	n/a	None	A	90	Presence detection	Floor 0m	See Guidance Notes	n/a
		IPS Room	1	1.0	IPS Room	Engineering	Manufacturer Dependant	Manufacturer Dependant	None	None	No	None	Central General Extract	0	3	Negative	None	43	n/a	0	n/a	n/a	None	A	80	Presence detection	Floor 0m	See Guidance Notes	n/a
		Linen Bay	2	1.5	Linen Bay	W1594-01	28	16	Adjacent Space Transfer Air	None	No	None	Central Extract	0	3	Negative	None	43	n/a		200	n/a	None	A	80	Presence detection	Floor 0m	See Guidance Notes	n/a
		Photocopy Room	1	6	Cellular / Ward Offices	M0251	25	18	Radiant Panels	Remote Sensor Adj.	Yes	Comfort Cooled Fresh Air	Central Supply and Extract	4	4	Balanced	G4	43	n/a		300	n/a	None	A	80	Switch	Desk 0.75 to 0.85m	See Guidance Notes	n/a
		MRI Room	1	45.0	Diagnostic room	E0801	25	18	Warm Air - Reheat Battery	BMS Adjustable Sensor	Yes	Comfort Cooled	Central Supply and Extract	to suit location	to suit location	Balanced	F7	43	41		300	n/a	1000	A	80	Switch / Dimmer	General working plane 1m	See Guidance Notes	1
		Control Room - CT/MRI	1	24.0	Cellular / Ward Offices	E0604-01	25	18	Radiant Panels	Remote Sensor Adj.	Yes	Comfort Cooled Fresh Air	Central Supply and Extract	4	4	Balanced	G4	43	n/a		300	n/a	None	A	80	Switch	Desk 0.75 to 0.85m	See Guidance Notes	n/a
		Equipment Room - MRI	1	16.0	IT equipment (comms server)	E0311	25	18	None	None	Yes	Ceiling Cassette - Chilled Water	Central General Extract	0	2	Negative	None	n/a	n/a		300	n/a	None	A	80	Switch	Floor 0m	See Guidance Notes	n/a
		CT Room	1	36.0	Diagnostic room	E0601-01	25	18	Warm Air - Reheat Battery	BMS Adjustable Sensor	Yes	Comfort Cooled	Central Supply and Extract	to suit location	to suit location	Balanced	F7	43	41		300	n/a	1000	A	80	Switch / Dimmer	General working plane 1m	See Guidance Notes	1
		WC - Wheelchair accessible	1	4.5	Toilet	V0922	28	18	Adjacent Space Transfer Air	None	No	None	Central Dirty Extract	0	10	Negative	None	43	41		200	n/a	None	A	80	Presence detection	Floor 0m	See Guidance Notes	n/a
		Changing Cubicles	2	4.0	Changing Facilities	V0726	28	18	Radiant Panels	Remote Sensor Adj.	Yes	Comfort Cooled Fresh Air	Central Supply and Extract	6	10	positive to wc	G4	43	41		100	n/a	None	A	80	Presence detection	Floor 0m	See Guidance Notes	n/a
		Baby Infant / Feeding Room	1	4.0	Baby Feeding	S0012	25	18	Radiant Panels	Remote Sensor Adj.	No	None	Central Supply Air	5	0	Positive	G4	43	41		100	n/a	None	A	80	Presence detection	Floor 0m	See Guidance Notes	n/a
		Induction Area - 1 place	1	16.0	Treatment Room	X0145-01	28	18	Radiant Panels	Remote Sensor Adj.	Yes	Comfort Cooled Fresh Air	Central Supply Air	10	0	Positive	F7	43	41		500	n/a	1000	A	90	Switch	Bed / Trolley 1.45m	See Guidance Notes	n/a
		Recovery Area - 1 place	1	16.0	Treatment Room	B2417-01	28	18	Radiant Panels	Remote Sensor Adj.	Yes	Comfort Cooled Fresh Air	Central Supply Air	10	0	Positive	F7	43	41		500	n/a	1000	A	90	Switch	Bed / Trolley 1.45m	See Guidance Notes	n/a
		Waiting Area	1	12.0	Waiting Room	J0132-02	28	18	Radiant Panels	Remote Sensor Adj.	Yes	Comfort Cooled Fresh Air	Central Supply and Extract	5	5	Balanced	G4	43	n/a		300	n/a	None	A	80	Switch	Floor 0m	See Guidance Notes	n/a
		Trolley Bay	2	4.0	Circulation Equipment Storage Bays	J1624	28	16	Adjacent Space Transfer Air	None	No	None	Central General Extract	0	3	Negative	None	43	n/a		200	n/a	None	A	80	Presence detection	Floor 0m	See Guidance Notes	n/a
		Adult Waiting Area	1	8.0	Waiting Room	J0132-02	28	18	Radiant Panels	Remote Sensor Adj.	Yes	Comfort Cooled Fresh Air	Central Supply and Extract	5	5	Balanced	G4	43	n/a		300	n/a	None	A	80	Switch	Floor 0m	See Guidance Notes	n/a
		WC - Wheelchair accessible & change	1	7.0	Toilet	V0922	28	18	Adjacent Space Transfer Air	None	No	None	Central Dirty Extract	0	10	Negative	None	43	41		200	n/a	None	A	80	Presence detection	Floor 0m	See Guidance Notes	n/a
		WC - Wheelchair accessible	1	4.5	Toilet	V0922	28	18	Adjacent Space Transfer Air	None	No	None	Central Dirty Extract	0	10	Negative	None	43	41		200	n/a	None	A	80	Presence detection	Floor 0m	See Guidance Notes	n/a
		CT Room	1	36.0	Diagnostic room	E0601	25	18	Warm Air - Reheat Battery	BMS Adjustable Sensor	Yes	Comfort Cooled	Central Supply and Extract	to suit location	to suit location	Balanced	F7	43	41		300	n/a	1000	A	80	Switch / Dimmer	General working plane 1m	See Guidance Notes	1
		Control Room - CT	1	16.0	Cellular / Ward Offices	E0604-02	25	18	Radiant Panels	Remote Sensor Adj.	Yes	Comfort Cooled Fresh Air	Central Supply and Extract	4	4	Balanced	G4	43	n/a		300	n/a	None	A	80	Switch	Desk 0.75 to 0.85m	See Guidance Notes	n/a
		Preparation Room	1	14.0	Consulting Room	T0526-?	28	18	Radiant Panels	Remote Sensor Adj.	Yes	Comfort Cooled Fresh Air	Central Supply and Extract	3	3	Balanced	G4	43	41		300	n/a	1000	A	80	Switch	Bed / Trolley 1.45m	See Guidance Notes	1
		Injection Room	1	12.0	Treatment Room	E0715	28	18	Radiant Panels	Remote Sensor Adj.	Yes	Comfort Cooled Fresh Air	Central Supply Air	10	0	Positive	F7	43	41		500	n/a	1000	A	90	Switch	Bed / Trolley 1.45m	See Guidance Notes	n/a
		Changing Cubicles	2	4.0	Changing Facilities	V0726	28	18	Radiant Panels	Remote Sensor Adj.	Yes	Comfort Cooled Fresh Air	Central Supply and Extract	6	10	positive to wc	G4	43	41		100	n/a	None	A	80	Presence detection	Floor 0m	See Guidance Notes	n/a
		Inpatient Holding Bays	1	43.2	Circulation Equipment Storage Bays	J0132-02	28	16	Adjacent Space Transfer Air	None	No	None	Central General Extract	0	3	Negative	None	43	n/a		200	n/a	None	A	80	Presence detection	Floor 0m	See Guidance Notes	n/a
		Toilets	1	3.0	Toilet	V1010	28	18	Adjacent Space Transfer Air	None	No	None	Central Dirty Extract	0	10	Negative	None	43	41		200	n/a	None	A	80	Presence detection	Floor 0m	See Guidance Notes	n/a
		Disabled Toilet	1	4.5	Toilet	V0922	28	18	Adjacent Space Transfer Air	None	No	None	Central Dirty Extract	0	10	Negative	None	43	41		200	n/a	None	A	80	Presence detection	Floor 0m	See Guidance Notes	n/a
		MRI Room	2	45.0	Diagnostic room	E0801-01	25	18	Warm Air - Reheat Battery	BMS Adjustable Sensor	Yes	Comfort Cooled	Central Supply and Extract	to suit location	to suit location	Balanced	F7	43	41		300	n/a	1000	A	80	Switch / Dimmer	General working plane 1m	See Guidance Notes	1
		Control Room - MRI	1	24.0	Cellular / Ward Offices	E0604-03	25	18	Radiant Panels	Remote Sensor Adj.	Yes	Comfort Cooled Fresh Air	Central Supply and Extract	4	4	Balanced	G4	43	n/a		300	n/a	None	A	80	Switch	Desk 0.75 to 0.85m	See Guidance Notes	n/a
		Equipment Room	2	16.0	Storage Area Equipment	W1585	28	16	Radiant Panels	Remote Sensor Adj.	No	None	Central General Extract	0	3	Negative	None	43	n/a		200	n/a	None	A	80	Presence detection	Floor 0m	See Guidance Notes	n/a
		Preparation Room	1	14.0	Consulting Room	T0526-?	28	18	Radiant Panels	Remote Sensor Adj.	Yes	Comfort Cooled Fresh Air	Central Supply and Extract	3	3	Balanced	G4	43	41		300	n/a	1000	A	80	Switch	Bed / Trolley 1.45m	See Guidance Notes	1
		Injection Room	1	12.0	Consulting Room	E0715	28	18	Radiant Panels	Remote Sensor Adj.	Yes	Comfort Cooled Fresh Air	Central Supply and Extract	3	3	Balanced	G4	43	41		300	n/a	1000	A	80	Switch	Bed / Trolley 1.45m	See Guidance Notes	1
		Sub Wait	1	6.0	Waiting Room	J0132-02	28	18	Radiant Panels	Remote Sensor Adj.	Yes	Comfort Cooled Fresh Air	Central Supply and Extract	5	5	Balanced	G4	43	n/a		300	n/a	None	A	80	Switch	Floor 0m	See Guidance Notes	n/a
		Changing Cubicles	6	4.0	Changing Facilities	V0726	28	18	Radiant Panels	Remote Sensor Adj.	Yes	Comfort Cooled Fresh Air	Central Supply and Extract	6	10	positive to wc	G4	43	41		100	n/a	None	A	80	Presence detection	Floor 0m	See Guidance Notes	n/a
		Recovery Bays	1	8.0	Circulation Equipment Storage Bays	B2417-01	28	16	Adjacent Space Transfer Air	None	No	None	Central General Extract	0	3	Negative	None	43	n/a		200	n/a	None	A	80	Presence detection	Floor 0m	See Guidance Notes	n/a
		Toilets	1	3.0	Toilet	V1010	28	18	Adjacent Space Transfer Air	None	No	None	Central Dirty Extract	0	10	Negative	None	43	41		200	n/a	None	A	80	Presence detection	Floor 0m	See Guidance Notes	n/a
		Disabled Toilet	1	4.5	Toilet	V0922	28	18	Adjacent Space Transfer Air	None	No	None	Central Dirty Extract	0	10	Negative	None	43	41		200	n/a	None	A	80	Presence detection	Floor 0m	See Guidance Notes	n/a
		MRI Room	1	45.0	Diagnostic room	E0801-01	25	18	Warm Air - Reheat Battery	BMS Adjustable Sensor	Yes	Comfort Cooled	Central Supply and Extract	to suit location	to suit location	Balanced	F7	43	41		300	n/a	1000	A	80	Switch / Dimmer	General working plane 1m	See Guidance Notes	1
		Control Room - MRI	1	24.0	Cellular / Ward Offices	E0604-03	25	18	Radiant Panels	Remote Sensor Adj.	Yes	Comfort Cooled Fresh Air	Central Supply and Extract	4	4	Balanced	G4	43	n/a		300	n/a	None	A	80	Switch	Desk 0.75 to 0.85m	See Guidance Notes	n/a
		Equipment Room	1	16.0	Storage Area Equipment	W1585	28	16	Radiant Panels	Remote Sensor Adj.	No	None	Central General Extract	0	3	Negative	None	43	n/a		200	n/a	None	A	80	Presence detection	Floor 0m	See Guidance Notes	n/a
		Equipment Store	1	6.0	Storage Area Equipment	W1585	28	16	Radiant Panels	Remote Sensor Adj.	No	None	Central General Extract	0	3	Negative	None	43	n/a		200	n/a	None	A	80	Presence detection	Floor 0m	See Guidance Notes	n/a
		University Staff Office	1	10.0	Cellular / Ward Offices	M0251	25	18	Radiant Panels	Remote Sensor Adj.	Yes	Comfort Cooled Fresh Air	Central Supply and Extract	4	4	Balanced	G4	43	n/a		300	n/a	None	A	80	Switch	Desk 0.75 to 0.85m	See Guidance Notes	n/a
		Store Room	1	20.0	Storage Area Equipment	W1585-??	28	16	Radiant Panels	Remote Sensor Adj.	No	None	Central General Extract	0	3	Negative	None	43	n/a		200	n/a	None	A	80	Presence detection	Floor 0m	See Guidance Notes	n/a
		DSR	1	7.0	DSR	Y1510	28	18	Adjacent Space Transfer Air	None	No	None	Central Dirty Extract	0	6	Negative	None	43	60		100	n/a	None	A	90	Presence detection	Floor 0m	See Guidance Notes	n/a
		Dirty Utility	1	9.0	Dirty utility	Y0431	28	18	Adjacent Space Transfer Air	None	No	None	Central Dirty Extract	0	6	Negative	None	43	41		200	n/a	None	A	80	Presence detection	Floor 0m	See Guidance Notes	n/a
		IPS Room	1	3.0	IPS Room	Engineering	Manufacturer Dependant	Manufacturer Dependant	None	None	No	None	Central General Extract	0	3	Negative	None	43	n/a	0	n/a	n/a	None	A	80	Presence detection	Floor 0m	See Guidance Notes	n/a
		Clean Utility	1	10.0	Clean Utility	T0101	28	18	Radiant Panels	Remote Sensor Adj.	Yes	Comfort Cooled Fresh Air	Central Supply Air	6	0	Positive	G4	43	41		150	n/a	None	A	80	Presence detection	General working plane 1m	See Guidance Notes	n/a
		Staff WC	1	3.0	Toilet	V1010	28	18	Adjacent Space Transfer Air	None	No	None	Central Dirty Extract	0	10	Negative	None	43	41		200	n/a	None	A	80	Presence detection	Floor 0m	See Guidance Notes	n/a
		Male Staff Changing and Lockers	1	27.0	Changing Facilities	V0726	28	18	Radiant Panels	Remote Sensor Adj.	Yes	Comfort Cooled Fresh Air	Central Supply and Extract	6	10	positive to wc	G4	43	41		100	n/a	None	A	80	Presence detection	Floor 0m	See Guidance Notes	n/a
		Female Staff Changing and Lockers	1	65.0	Changing Facilities	V0726	28	18	Radiant Panels	Remote Sensor Adj.	Yes	Comfort Cooled Fresh Air	Central Supply and Extract	6	10	positive to wc	G4	43	41		100	n/a	None	A	80	Presence detection	Floor 0m	See Guidance Notes	n/a
		Staff WC	2	3.0	Toilet	V1010	28	18	Adjacent Space Transfer Air	None	No	None	Central Dirty Extract	0	10	Negative	None	43	41		200	n/a	None	A	80	Presence detection	Floor 0m	See Guidance Notes	n/a
		Resource Room / Library	1	39.0	Open Plan Office	H1313-03	25	18	Radiant Panels	Remote Sensor Adj.	Yes	Comfort Cooled Fresh Air	Central Supply and Extract	4	4	Balanced	G4	43	n/a		300	n/a	None	A	80	Switch	Desk 0.75 to 0.85m	See Guidance Notes	n/a
		Consultant Office (5 person)	1	20.5	Cellular / Ward Offices	M0251	25	18	Radiant Panels	Remote Sensor Adj.	Yes	Comfort Cooled Fresh Air	Central Supply and Extract	4	4	Balanced	G4	43	n/a		300	n/a	None	A	80	Switch	Desk 0.75 to 0.85m	See Guidance Notes	n/a
		Consultant Office (5 person)	2	20.5	Cellular / Ward Offices	M0251	25	18	Radiant Panels	Remote Sensor Adj.	Yes	Comfort Cooled Fresh Air	Central Supply and Extract	4	4	Balanced	G4	43	n/a		300	n/a	None	A	80	Switch	Desk 0.75 to 0.85m	See Guidance Notes	n/a
		Registrars Office (5 desks)	1	20.5	Cellular / Ward Offices	M0251	25	18	Radiant Panels	Remote Sensor Adj.	Yes	Comfort Cooled Fresh Air	Central Supply and Extract	4	4	Balanced	G4	43	n/a		300	n/a	None	A	80	Switch	Desk 0.75 to 0.85m	See Guidance Notes	n/a

RHSC / DCN Environmental Matrix

Dept	Dept	Room Name	Qty		Room Function	ADB Code	Temp (max)	Temp (min)	Heating Type	Heating Control	Cooling (present)	Cooling (type)	Ventilation (type)	Supply (ac/hr)	Extract (ac/hr)	Relative pressure	Min filtration	Surface temp	Water temp	Safety Notes	Normal lux	Night lux	Local lux	Standby grade	Colour render	Control	Plane	Medical Location	
		Superintendent/PACS Manager/Radiographers/Nursing Office	1	28.7	Cellular / Ward Offices	M0251	25	18	Radiant Panels	Remote Sensor Adj.	Yes	Comfort Cooled Fresh Air	Central Supply and Extract	4	4	Balanced	G4	43	n/a		300	n/a	None	A	80	Switch	Desk 0.75 to 0.85m	See Guidance Notes	n/a
		Meeting Room - 6 person	1	9.0	Meeting Room	H1313-02	25	18	Radiant Panels	Remote Sensor Adj.	Yes	Ceiling Cassette - Chilled Water	Central Supply and Extract	10 l/s per person	10 l/s per person	Balanced	G4	43	n/a		300	n/a	None	A	80	Switch	Desk 0.75 to 0.85m	See Guidance Notes	n/a
		Meeting Room - 4 person	2	6.0	Meeting Room	H1313-01	25	18	Radiant Panels	Remote Sensor Adj.	Yes	Ceiling Cassette - Chilled Water	Central Supply and Extract	10 l/s per person	10 l/s per person	Balanced	G4	43	n/a		300	n/a	None	A	80	Switch	Desk 0.75 to 0.85m	See Guidance Notes	n/a
		2nd Floor Desks	1	233.7	Open Plan Office	M0132-01	25	18	Radiant Panels	Remote Sensor Adj.	Yes	Comfort Cooled Fresh Air	Central Supply and Extract	4	4	Balanced	G4	43	n/a		300	n/a	None	A	80	Switch	Desk 0.75 to 0.85m	See Guidance Notes	n/a
		2nd Floor Desks	1	143.5	Open Plan Office	M0132-01	25	18	Radiant Panels	Remote Sensor Adj.	Yes	Comfort Cooled Fresh Air	Central Supply and Extract	4	4	Balanced	G4	43	n/a		300	n/a	None	A	80	Switch	Desk 0.75 to 0.85m	See Guidance Notes	n/a
		2nd Floor Desks	1	180.4	Open Plan Office	M0132-01	25	18	Radiant Panels	Remote Sensor Adj.	Yes	Comfort Cooled Fresh Air	Central Supply and Extract	4	4	Balanced	G4	43	n/a		300	n/a	None	A	80	Switch	Desk 0.75 to 0.85m	See Guidance Notes	n/a
		2nd Floor Desks	1	221.4	Open Plan Office	M0132-01	25	18	Radiant Panels	Remote Sensor Adj.	Yes	Comfort Cooled Fresh Air	Central Supply and Extract	4	4	Balanced	G4	43	n/a		300	n/a	None	A	80	Switch	Desk 0.75 to 0.85m	See Guidance Notes	n/a
		2nd Floor Desks	1	69.7	Open Plan Office	M0132-01	25	18	Radiant Panels	Remote Sensor Adj.	Yes	Comfort Cooled Fresh Air	Central Supply and Extract	4	4	Balanced	G4	43	n/a		300	n/a	None	A	80	Switch	Desk 0.75 to 0.85m	See Guidance Notes	n/a
		2nd Floor Desks	1	147.6	Open Plan Office	M0132-01	25	18	Radiant Panels	Remote Sensor Adj.	Yes	Comfort Cooled Fresh Air	Central Supply and Extract	4	4	Balanced	G4	43	n/a		300	n/a	None	A	80	Switch	Desk 0.75 to 0.85m	See Guidance Notes	n/a
		2nd Floor Desks	1	180.4	Open Plan Office	M0132-01	25	18	Radiant Panels	Remote Sensor Adj.	Yes	Comfort Cooled Fresh Air	Central Supply and Extract	4	4	Balanced	G4	43	n/a		300	n/a	None	A	80	Switch	Desk 0.75 to 0.85m	See Guidance Notes	n/a
		Meeting Room - 4 person	7	6.0	Cellular / Ward Offices	M0251	25	18	Radiant Panels	Remote Sensor Adj.	Yes	Comfort Cooled Fresh Air	Central Supply and Extract	4	4	Balanced	G4	43	n/a		300	n/a	None	A	80	Switch	Desk 0.75 to 0.85m	See Guidance Notes	n/a
		Meeting Room - 6 person	2	9.0	Cellular / Ward Offices	M0251	25	18	Radiant Panels	Remote Sensor Adj.	Yes	Comfort Cooled Fresh Air	Central Supply and Extract	4	4	Balanced	G4	43	n/a		300	n/a	None	A	80	Switch	Desk 0.75 to 0.85m	See Guidance Notes	n/a
		Dictation/ 1:1/Phone Booth	18	4.2	Cellular / Ward Offices	M0251-01	25	18	Radiant Panels	Remote Sensor Adj.	Yes	Comfort Cooled Fresh Air	Central Supply and Extract	4	4	Balanced	G4	43	n/a		300	n/a	None	A	80	Switch	Desk 0.75 to 0.85m	See Guidance Notes	n/a
		WC - Wheelchair Accessible	2	4.5	Toilet	V0922	28	18	Adjacent Space Transfer Air	None	No	None	Central Dirty Extract	0	10	Negative	None	43	41		200	n/a	None	A	80	Presence detection	Floor 0m	See Guidance Notes	n/a
		WC - Staff (Male)	1	17.0	Toilet	V1010	28	18	Adjacent Space Transfer Air	None	No	None	Central Dirty Extract	0	10	Negative	None	43	41		200	n/a	None	A	80	Presence detection	Floor 0m	See Guidance Notes	n/a
		WC - Staff (Male)	1	11.0	toilet	V1010	28	18	Adjacent Space Transfer Air	None	No	None	Central Dirty Extract	0	10	Negative	None	43	41		200	n/a	None	A	80	Presence detection	Floor 0m	See Guidance Notes	n/a
		WC - Staff (Female)	1	18.0	toilet	V1010	28	18	Adjacent Space Transfer Air	None	No	None	Central Dirty Extract	0	10	Negative	None	43	41		200	n/a	None	A	80	Presence detection	Floor 0m	See Guidance Notes	n/a
		WC - Staff (Female)	1	21.0	Toilet	V1010	28	18	Adjacent Space Transfer Air	None	No	None	Central Dirty Extract	0	10	Negative	None	43	41		200	n/a	None	A	80	Presence detection	Floor 0m	See Guidance Notes	n/a
		Store Clinical	1	24.0	Storage Area Equipment	W1585	28	16	Radiant Panels	Remote Sensor Adj.	No	None	Central General Extract	0	3	Negative	None	43	n/a		200	n/a	None	A	80	Presence detection	Floor 0m	See Guidance Notes	n/a
		Beverage Bay	1	3.0	Tea Making	P0625	28	18	Adjacent Space Transfer Air	None	No	None	Central General Extract	0	5	Negative	None	43	41		200	n/a	None	A	80	switch	Floor 0m	See Guidance Notes	n/a
		Printer/Photocopier Room	1	16.0	Cellular / Ward Offices	M0251	25	18	Radiant Panels	Remote Sensor Adj.	Yes	Comfort Cooled Fresh Air	Central Supply and Extract	4	4	Balanced	G4	43	n/a		300	n/a	None	A	80	Switch	Desk 0.75 to 0.85m	See Guidance Notes	n/a
R1	Clinical Management	Staff Room	1	12.0	Common room/staff room/lounge	D0608-03	28	18	Radiant Panels	Remote Sensor Adj.	Yes	Comfort Cooled Fresh Air	Central Supply and Extract	6	8	Negative	G4	43	41		300	n/a	None	A	80	Switch	Floor 0m	See Guidance Notes	n/a
		DSR	2	7.0	DSR	Y1510	28	18	Adjacent Space Transfer Air	None	No	None	Central Dirty Extract	0	10	Negative	None	43	60		100	n/a	None	A	90	Presence detection	Floor 0m	See Guidance Notes	n/a
		Disposal Hold (small)	1	4.0	Disposal Hold	Y0646	28	18	Adjacent Space Transfer Air	None	No	None	Central Dirty Extract	0	10	Negative	None	43	n/a		100	n/a	None	A	90	Presence detection	Floor 0m	See Guidance Notes	n/a
		4th Floor Desks	1	213.0	Open Plan Office	M0132-02	25	18	Radiant Panels	Remote Sensor Adj.	Yes	Comfort Cooled Fresh Air	Central Supply and Extract	4	4	Balanced	G4	43	n/a		300	n/a	None	A	80	Switch	Desk 0.75 to 0.85m	See Guidance Notes	n/a
		Meeting Room - 4 person	1	6.0	Meeting Room	H1313-01	25	18	Radiant Panels	Remote Sensor Adj.	Yes	Ceiling Cassette - Chilled Water	Central Supply and Extract	10 l/s per person	10 l/s per person	Balanced	G4	43	n/a		300	n/a	None	A	80	Switch	Desk 0.75 to 0.85m	See Guidance Notes	n/a
		Meeting Room - 6 person	1	4.0	Meeting Room	H1313-02	25	18	Radiant Panels	Remote Sensor Adj.	Yes	Ceiling Cassette - Chilled Water	Central Supply and Extract	10 l/s per person	10 l/s per person	Balanced	G4	43	n/a		300	n/a	None	A	80	Switch	Desk 0.75 to 0.85m	See Guidance Notes	n/a
		Dictation/ 1:1/Phone Booth	2	4.2	Cellular / Ward Offices	M0251-01	25	18	Radiant Panels	Remote Sensor Adj.	Yes	Comfort Cooled Fresh Air	Central Supply and Extract	4	4	Balanced	G4	43	n/a		300	n/a	None	A	80	Switch	Desk 0.75 to 0.85m	See Guidance Notes	n/a
		Management Conference Room	2	26.0	Meeting Room	H1313-03	25	18	Radiant Panels	Remote Sensor Adj.	Yes	Ceiling Cassette - Chilled Water	Central Supply and Extract	10 l/s per person	10 l/s per person	Balanced	G4	43	n/a		300	n/a	None	A	80	Switch	Desk 0.75 to 0.85m	See Guidance Notes	n/a
		WC - Wheelchair Accessible	1	4.5	toilet	V0922	28	18	Adjacent Space Transfer Air	None	No	None	Central Dirty Extract	0	10	Negative	None	43	41		200	n/a	None	A	80	Presence detection	Floor 0m	See Guidance Notes	n/a
		WC - Staff (Male)	1	8.0	Toilet	V1010	28	18	Adjacent Space Transfer Air	None	No	None	Central Dirty Extract	0	10	Negative	None	43	41		200	n/a	None	A	80	Presence detection	Floor 0m	See Guidance Notes	n/a
		WC - Staff (Female)	1	11.0	Toilet	V1010	28	18	Adjacent Space Transfer Air	None	No	None	Central Dirty Extract	0	10	Negative	None	43	41		200	n/a	None	A	80	Presence detection	Floor 0m	See Guidance Notes	n/a
		Store Management	1	6.0	Cellular / Ward Offices	M0251	25	18	Radiant Panels	Remote Sensor Adj.	Yes	Comfort Cooled Fresh Air	Central Supply and Extract	4	4	Balanced	G4	43	n/a		300	n/a	None	A	80	Switch	Desk 0.75 to 0.85m	See Guidance Notes	n/a
		Store Management	1	10.0	Cellular / Ward Offices	M0251	25	18	Radiant Panels	Remote Sensor Adj.	Yes	Comfort Cooled Fresh Air	Central Supply and Extract	4	4	Balanced	G4	43	n/a		300	n/a	None	A	80	Switch	Desk 0.75 to 0.85m	See Guidance Notes	n/a
		Beverage Bay	1	3.0	Tea Making	P0625	28	18	Adjacent Space Transfer Air	None	No	None	Central General Extract	0	5	Negative	None	43	41		200	n/a	None	A	80	switch	Floor 0m	See Guidance Notes	n/a
		Printer/Photocopier Room	1	6.0	Cellular / Ward Offices	M0251	25	18	Radiant Panels	Remote Sensor Adj.	Yes	Comfort Cooled Fresh Air	Central Supply and Extract	4	4	Balanced	G4	43	n/a		300	n/a	None	A	80	Switch	Desk 0.75 to 0.85m	See Guidance Notes	n/a
		Staff Room	2	6.0	Common room/staff room/lounge	D0608-03	28	18	Radiant Panels	Remote Sensor Adj.	Yes	Comfort Cooled Fresh Air	Central Supply and Extract	6	8	Negative	G4	43	41		300	n/a	None	A	80	Switch	Floor 0m	See Guidance Notes	n/a
		DSR	1	7.0	DSR	Y1510	28	18	Adjacent Space Transfer Air	None	No	None	Central Dirty Extract	0	10	Negative	None	43	60		100	n/a	None	A	90	Presence detection	Floor 0m	See Guidance Notes	n/a
		Disposal Hold (small)	1	4.0	Disposal Hold	Y0646	28	18	Adjacent Space Transfer Air	None	No	None	Central Dirty Extract	0	10	Negative	None	43	n/a		100	n/a	None	A	90	Presence detection	Floor 0m	See Guidance Notes	n/a
R2	Health Records	Receipt / Dispatch Counter	1	6.0	Reception	J0132-01	28	18	Radiant Panels	Remote Sensor Adj.	Yes	Comfort Cooled Fresh Air	Central Supply Air	4	4	Balanced	G4	43	n/a		300	n/a	None	A	80	Switch	Desk 0.75 to 0.85m	See Guidance Notes	n/a
		Trolley Area	1	6.0	Circulation Equipment Storage Bays	J1624	28	16	Adjacent Space Transfer Air	None	No	None	Central General Extract	0	3	Negative	None	43	n/a		200	n/a	None	A	80	Presence detection	Floor 0m	See Guidance Notes	n/a
		RHSC Office	1	15.0	Cellular / Ward Offices	M0251	25	18	Radiant Panels	Remote Sensor Adj.	Yes	Comfort Cooled Fresh Air	Central Supply and Extract	4	4	Balanced	G4	43	n/a		300	n/a	None	A	80	Switch	Desk 0.75 to 0.85m	See Guidance Notes	n/a
		RHSC & DCN Records Library (160,000 records)	1	368.0	Storage Area Equipment	W1585-??	28	16	Radiant Panels	Remote Sensor Adj.	No	None	Central General Extract	0	3	Negative	None	43	n/a		200	n/a	None	A	80	Presence detection	Floor 0m	See Guidance Notes	n/a
		Assistant Health Records Manager / Supervisors	1	12.0	Cellular / Ward Offices	M0251	25	18	Radiant Panels	Remote Sensor Adj.	Yes	Comfort Cooled Fresh Air	Central Supply and Extract	4	4	Balanced	G4	43	n/a		300	n/a	None	A	80	Switch	Desk 0.75 to 0.85m	See Guidance Notes	n/a
		WC Staff	1	3.0	Toilet	V1010	28	18	Adjacent Space Transfer Air	None	No	None	Central Dirty Extract	0	10	Negative	None	43	41		200	n/a	None	A	80	Presence detection	Floor 0m	See Guidance Notes	n/a
		RHSC / DCN Office 17 Person	3	3.0	Open Plan Office	M0132-01	25	18	Radiant Panels	Remote Sensor Adj.	Yes	Comfort Cooled Fresh Air	Central Supply and Extract	4	4	Balanced	G4	43	n/a		300	n/a	None	A	80	Switch	Desk 0.75 to 0.85m	See Guidance Notes	n/a
		Receipt Bay	1	3.0	Circulation Areas	cds	28	18	underfloor heating / none to suit location	BMS Adjustable Sensor	No	None	to suit location	to suit location	to suit location	Balanced	G4	43	41		200	n/a	None	A	80	presence detection	Floor 0m	See Guidance Notes	n/a
		Dry Goods	1	9.0	Storage Area Equipment	W1585-??	28	16	Radiant Panels	Remote Sensor Adj.	No	None	Central General Extract	0	3	Negative	None	43	n/a		200	n/a	None	A	80	Presence detection	Floor 0m	See Guidance Notes	n/a
		Kitchen Equipment	1	6.0	Storage Area Equipment	W1585-??	28	16	Radiant Panels	Remote Sensor Adj.	No	None	Central General Extract	0	3	Negative	None	43	n/a		200	n/a	None	A	80	Presence detection	Floor 0m	See Guidance Notes	n/a
		Refuse	1	10.0	Storage Area Equipment	W1585-??	28	16	Radiant Panels	Remote Sensor Adj.	No	None	Central General Extract	0	3	Negative	None	43	n/a		200	n/a	None	A	80	Presence detection	Floor 0m	See Guidance Notes	n/a
		Disposables / Detergent	1	6.0	DSR	Y1510	28	18	Adjacent Space Transfer Air	None	No	None	Central Dirty Extract	0	10	Negative	None	43	60		100	n/a	None	A	80	Presence detection	Floor 0m	See Guidance Notes	n/a
		Veg Store	1	6.0	CDS	cds	28	18	Adjacent Space Transfer Air	None	No	None	Central General Extract	0	3	Negative	None	n/a	n/a		200	n/a	None	A	80	Presence detection	Floor 0m	See Guidance Notes	n/a
		Raw Meat	1	7.0	CDS	cds	8	5	None	None	Yes	By Specialist	None	0	0	n/a	None	n/a	n/a		300	n/a	None	A	80	Switch	General working plane 1m	See Guidance Notes	n/a
		Dairy Store	1	9.0	CDS	cds	5	2	None	None	Yes	By Specialist	None	0	0	n/a	None	n/a	n/a		200	n/a	None	A	80	Presence detection	Floor 0m	See Guidance Notes	n/a
		Freezer	2	5.0	CDS	cds	-18	-20	None	None	Yes	By Specialist	None	0	0	n/a	None	n/a	n/a		300	n/a	None	A	80	Switch	Floor 0m	See Guidance Notes	n/a
		Preparation/Cooking Area	1	110.0	CDS	cds	28	18	None	None	Yes	Ceiling Cassette - Chilled Water	Central Supply and Extract	DW172 Dependant	DW172 Dependant	Negative	G4	43	60		500	n/a	None	A	80	Switch	General working plane 1m	See Guidance Notes	n/a
		Diet Prep Area	1	12.0	CDS	cds	28	18	None	None	Yes	Ceiling Cassette - Chilled Water	Central Supply and Extract	DW172 Dependant	DW172 Dependant	Negative	G4	43	60		500	n/a	None	A	80	Switch	General working plane 1m	See Guidance Notes	n/a
S1	Kitchen	Diet Store	1	5.0	CDS	W1585-??	28	18	Adjacent Space Transfer Air	None	No	None	Central General Extract	0	3	Negative	None	n/a	n/a		200	n/a	None	A	80	Presence detection	Floor 0m	See Guidance Notes	n/a
		Pan Wash	1	12.0	CDS	cds	28	18	None	None	Yes	Ceiling Cassette - Chilled Water	Central Supply and Extract	DW172 Dependant	DW172 Dependant	Negative	G4	43	60		300	n/a	None	A	80	Switch	General working plane 1m	See Guidance Notes	n/a

RHSC / DCN Environmental Matrix

Dept	Dept	Room Name	Qty		Room Function	ADB Code	Temp (max)	Temp (min)	Heating Type	Heating Control	Cooling (present)	Cooling (type)	Ventilation (type)	Supply (ac/hr)	Extract (ac/hr)	Relative pressure	Min filtration	Surface temp	Water temp	Safety Notes	Normal lux	Night lux	Local lux	Standby grade	Colour render	Control	Plane	Medical Location	
		Temperature Controlled Sandwich Prep	1	18.0	CDS	cds	12	10	None	None	Yes	Ceiling Cassette - Chilled Water	General Supply and Extract	4	4	Balanced	G4	43	41		500	n/a	None	A	80	Switch	General working plane 1m	See Guidance Notes	n/a
		Weighing	1	7.0	CDS	cds	28	18	None	None	Yes	Ceiling Cassette - Chilled Water	Central Supply and Extract	DW172 Dependant	DW172 Dependant	Negative	G4	43	60		300	n/a	None	A	80	Switch	General working plane 1m	See Guidance Notes	n/a
		Clean Trolleys Park	1	21.5	CDS	cds	28	16	Adjacent Space Transfer Air	None	No	None	General Supply and Extract	1	2	Negative	None	n/a	n/a		200	n/a	None	A	80	Presence detection	Floor 0m	See Guidance Notes	n/a
		Bakery Preparation	1	13.0	CDS	cds	12	10	None	None	Yes	Ceiling Cassette - Chilled Water	General Supply and Extract	4	4	Balanced	G4	43	41		500	n/a	None	A	80	Switch	General working plane 1m	See Guidance Notes	n/a
		Returned Trolleys	1	25.0	CDS	cds	28	16	Adjacent Space Transfer Air	None	No	None	General Supply and Extract	1	2	Negative	None	n/a	n/a		300	n/a	None	A	80	Presence detection	Floor 0m	See Guidance Notes	n/a
		Trolley Wash Area	1	6.0	CDS	cds	28	16	Adjacent Space Transfer Air	None	No	None	General Supply and Extract	2	3	Negative	None	43	41		300	n/a	None	A	80	Switch	General working plane 1m	See Guidance Notes	n/a
		Office 5 person	1	20.5	Cellular / Ward Offices	M0251	25	18	Radiant Panels	Remote Sensor Adj.	Yes	Comfort Cooled Fresh Air	Central Supply and Extract	4	4	Balanced	G4	43	n/a		300	n/a	None	A	80	Switch	Desk 0.75 to 0.85m	See Guidance Notes	n/a
		Female Staff Changing inc Shower	1	13.0	Changing Facilities	V0554	28	18	Radiant Panels	Remote Sensor Adj.	Yes	Comfort Cooled Fresh Air	Central Supply and Extract	6	10	positive to wc	G4	43	41		100	n/a	None	A	80	Presence detection	Floor 0m	See Guidance Notes	n/a
		Male Staff Changing inc Shower	1	10.0	Changing Facilities	V0726	28	18	Radiant Panels	Remote Sensor Adj.	Yes	Comfort Cooled Fresh Air	Central Supply and Extract	6	10	positive to wc	G4	43	41		100	n/a	None	A	80	Presence detection	Floor 0m	See Guidance Notes	n/a
		DSR	1	7.0	DSR	Y1510	28	18	Adjacent Space Transfer Air	None	No	None	Central Dirty Extract	0	10	Negative	None	43	60		300	n/a	None	A	80	Switch	Floor 0m	See Guidance Notes	n/a
S2	e-Health Infrastructure	Core Server Room	1	40.0	IT equipment (comms server)	Engineering	25	18	None	None	Yes	Ceiling Cassette - Chilled Water	Central General Extract	0	2	Negative	None	n/a	n/a		300	n/a	None	A	80	Switch	Floor 0m	See Guidance Notes	n/a
		Domestic Service Office	1	20.5	Cellular / Ward Offices	M0251	25	18	Radiant Panels	Remote Sensor Adj.	Yes	Comfort Cooled Fresh Air	Central Supply and Extract	4	4	Balanced	G4	43	n/a		300	n/a	None	A	80	Switch	Desk 0.75 to 0.85m	See Guidance Notes	n/a
		Dictation/ 1:1/Phone Booth	1	4.2	Cellular / Ward Offices	M0251-01	25	18	Radiant Panels	Remote Sensor Adj.	Yes	Comfort Cooled Fresh Air	Central Supply and Extract	4	4	Balanced	G4	43	n/a		300	n/a	None	A	80	Switch	Desk 0.75 to 0.85m	See Guidance Notes	n/a
		Sanitary Bins Store	1	6.0	Dirty utility	Y0431	28	18	Adjacent Space Transfer Air	None	No	None	Central Dirty Extract	0	6	Negative	None	43	41		200	n/a	None	A	80	Presence detection	Floor 0m	See Guidance Notes	n/a
S3	Domestic Services	Bulk Equipment Store	1	10.0	Storage Area Equipment	W1585-??	28	16	Radiant Panels	Remote Sensor Adj.	No	None	Central General Extract	0	3	Negative	None	43	n/a		200	n/a	None	A	80	Presence detection	Floor 0m	See Guidance Notes	n/a
		Supplies Store	1	20.0	Storage Area Equipment	W1585-??	28	16	Radiant Panels	Remote Sensor Adj.	No	None	Central General Extract	0	3	Negative	None	43	n/a		200	n/a	None	A	80	Presence detection	Floor 0m	See Guidance Notes	n/a
		Linen Pool (Clean)	1	32.0	Linen Bay	W1594-01	28	16	Adjacent Space Transfer Air	None	No	None	Central Extract	0	3	Negative	None	43	n/a		200	n/a	None	A	80	Presence detection	Floor 0m	See Guidance Notes	n/a
		Linen Pool (Dirty)	1	32.0	Dirty utility	Y0431	28	18	Adjacent Space Transfer Air	None	No	None	Central Dirty Extract	0	6	Negative	None	43	41		200	n/a	None	A	80	Presence detection	Floor 0m	See Guidance Notes	n/a
		Storage/Holding Area	1	100.0	Storage Area Equipment	W1585-??	28	16	Radiant Panels	Remote Sensor Adj.	No	None	Central General Extract	0	3	Negative	None	43	n/a		200	n/a	None	A	80	Presence detection	Floor 0m	See Guidance Notes	n/a
S4	Materials Management	Porters Office	1	10.0	Cellular / Ward Offices	M0251	25	18	Radiant Panels	Remote Sensor Adj.	Yes	Comfort Cooled Fresh Air	Central Supply and Extract	4	4	Balanced	G4	43	n/a		300	n/a	None	A	80	Switch	Desk 0.75 to 0.85m	See Guidance Notes	n/a
		Office	1	3.0	Tea Making	P0625	28	18	Adjacent Space Transfer Air	None	No	None	Central General Extract	0	5	Negative	None	43	41		200	n/a	None	A	80	switch	Floor 0m	See Guidance Notes	n/a
		Mailroom	1	20.0	Cellular / Ward Offices	M0251	25	18	Radiant Panels	Remote Sensor Adj.	Yes	Comfort Cooled Fresh Air	Central Supply and Extract	4	4	Balanced	G4	43	n/a		300	n/a	None	A	80	Switch	Desk 0.75 to 0.85m	See Guidance Notes	n/a
		Female Staff Changing , Shower, WC & Lockers	1	240.0	Changing Facilities	V0554	28	18	Radiant Panels	Remote Sensor Adj.	Yes	Comfort Cooled Fresh Air	Central Supply and Extract	6	10	positive to wc	G4	43	41		100	n/a	None	A	80	Presence detection	Floor 0m	See Guidance Notes	n/a
S5	Central Staff Changing	Male Staff Changing , Shower, WC & Lockers	1	100.0	Changing Facilities	V0554-01	28	18	Radiant Panels	Remote Sensor Adj.	Yes	Comfort Cooled Fresh Air	Central Supply and Extract	6	10	positive to wc	G4	43	41		100	n/a	None	A	80	Presence detection	Floor 0m	See Guidance Notes	n/a
		Bay for Token Machine	1	5.0	Circulation Equipment Storage Bays	P0808	28	16	Adjacent Space Transfer Air	None	No	None	Central General Extract	0	3	Negative	None	43	n/a		200	n/a	None	A	80	Presence detection	Floor 0m	See Guidance Notes	n/a
		DSR	1	7.0	DSR	Y1510	28	18	Adjacent Space Transfer Air	None	No	None	Central Dirty Extract	0	10	Negative	None	43	60		100	n/a	None	A	90	Presence detection	Floor 0m	See Guidance Notes	n/a
		Workshop (NPD)	1	45.0	Small Workshop	K0421	28	18	Radiant Panels	Remote Sensor Adj.	Yes	Comfort Cooled Fresh Air	Central Supply and Extract	4	6	Negative	G4	43	41		300	n/a	None	A	80	Switch	Desk 0.75 to 0.85m	See Guidance Notes	n/a
		Workshop (NHSL)	1	30.0	Small Workshop	K0421	28	18	Radiant Panels	Remote Sensor Adj.	Yes	Comfort Cooled Fresh Air	Central Supply and Extract	4	6	Negative	G4	43	41		300	n/a	None	A	80	Switch	Desk 0.75 to 0.85m	See Guidance Notes	n/a
		Store	1	30.0	Storage Area Equipment	W1585	28	16	Radiant Panels	Remote Sensor Adj.	No	None	Central General Extract	0	3	Negative	None	43	n/a		200	n/a	None	A	80	Presence detection	Floor 0m	See Guidance Notes	n/a
S6	Estates	Staff Room (4th floor)	1	12.0	Common room/staff room/lounge	D0608-03	28	18	Radiant Panels	Remote Sensor Adj.	Yes	Comfort Cooled Fresh Air	Central Supply and Extract	6	8	Negative	G4	43	41		300	n/a	None	A	80	Switch	Floor 0m	See Guidance Notes	n/a
		BMS Room	1	10.0	IT equipment (comms server)	query	25	18	None	None	Yes	Ceiling Cassette - Chilled Water	Central General Extract	0	2	Negative	None	n/a	n/a		300	n/a	None	A	80	Switch	Floor 0m	See Guidance Notes	n/a
		Staff Change	1	15.0	Changing Facilities	V0726	28	18	Radiant Panels	Remote Sensor Adj.	Yes	Comfort Cooled Fresh Air	Central Supply and Extract	6	10	positive to wc	G4	43	41		100	n/a	None	A	80	Presence detection	Floor 0m	See Guidance Notes	n/a
		Staff WC	1	3.0	Toilet	V1010	28	18	Adjacent Space Transfer Air	None	No	None	Central Dirty Extract	0	10	Negative	None	43	41		200	n/a	None	A	80	Presence detection	Floor 0m	See Guidance Notes	n/a
		Shower	2	2.5	Bathroom	V1643	28	20	Adjacent Space Transfer Air	None	No	None	Central Dirty Extract	0	10	Negative	None	43	41		200	n/a	None	A	80	Presence detection	Floor 0m	See Guidance Notes	n/a
		Restaurant	1	157.0	Eating/Drinking	D0608-02	28	18	Radiant Panels	Remote Sensor Adj.	Yes	Comfort Cooled Fresh Air	Central Supply and Extract	10 l/s per person	10 l/s per person	Balanced	G4	43	41		300	n/a	None	A	80	Switch	Floor 0m	See Guidance Notes	n/a
		Storage/Dishwashing	1	25.0	Storage Area Equipment	W1585-??	28	16	Radiant Panels	Remote Sensor Adj.	No	None	Central General Extract	0	3	Negative	None	43	n/a		200	n/a	None	A	80	Presence detection	Floor 0m	See Guidance Notes	n/a
S7	Restaurant	Male WC	2	3.0	Toilet	V1010	28	18	Adjacent Space Transfer Air	None	No	None	Central Dirty Extract	0	10	Negative	None	43	41		200	n/a	None	A	80	Presence detection	Floor 0m	See Guidance Notes	n/a
		DSR	1	7.0	DSR	Y1510	28	18	Adjacent Space Transfer Air	None	No	None	Central Dirty Extract	0	10	Negative	None	43	60		100	n/a	None	A	90	Presence detection	Floor 0m	See Guidance Notes	n/a
		Female WC	2	3.0	Toilet	V1010	28	18	Adjacent Space Transfer Air	None	No	None	Central Dirty Extract	0	10	Negative	None	43	41		200	n/a	None	A	80	Presence detection	Floor 0m	See Guidance Notes	n/a
S8	Sterile Support Store	Trolley Holding Bay	1	23	Circulation Equipment Storage Bays	J1624	28	16	Adjacent Space Transfer Air	None	No	None	Central General Extract	0	3	Negative	None	43	n/a		200	n/a	None	A	80	Presence detection	Floor 0m	See Guidance Notes	n/a
		RFFS Changing / Support	1	29	Changing Facilities	V0726	28	18	Radiant Panels	Remote Sensor Adj.	Yes	Comfort Cooled Fresh Air	Central Supply and Extract	6	10	positive to wc	G4	43	41		100	n/a	None	A	80	Presence detection	Floor 0m	See Guidance Notes	n/a
		Bed Bay	1	3.4	Circulation Equipment Storage Bays	G0180-06	28	16	Adjacent Space Transfer Air	None	No	None	Central General Extract	0	3	Negative	None	43	n/a		200	n/a	None	A	80	Presence detection	Floor 0m	See Guidance Notes	n/a
		WC Ambulant	1	3	Toilet	V1010	28	18	Adjacent Space Transfer Air	None	No	None	Central Dirty Extract	0	10	Negative	None	43	41		200	n/a	None	A	80	Presence detection	Floor 0m	See Guidance Notes	n/a
S9	Helipad Support	RFFS Medical Equipment Store	1	6	Storage Area Equipment	W1585-??	28	16	Radiant Panels	Remote Sensor Adj.	No	None	Central General Extract	0	3	Negative	None	43	n/a		200	n/a	None	A	80	Presence detection	Floor 0m	See Guidance Notes	n/a
T1	Plant	IT Node Rooms	25	9.0	IT equipment (comms server)	query	25	18	None	None	Yes	Ceiling Cassette - Chilled Water	Central General Extract	0	2	Negative	None	n/a	n/a		300	n/a	None	A	80	Switch	Floor 0m	See Guidance Notes	n/a
		Main Lab	1	120.0	Laboratory	L1804	25	18	Radiant Panels	Remote Sensor Adj.	Yes	Ceiling Cassette - Chilled Water	Central Supply and Extract	6	6	Balanced	F7	43	60		500	n/a	None	A	80	Switch	Desk 0.75 to 0.85m	See Guidance Notes	n/a
		Utility Area Wash Up	1	12.0	Laboratory	L1804	25	18	Radiant Panels	Remote Sensor Adj.	Yes	Ceiling Cassette - Chilled Water	Central Supply and Extract	6	6	Balanced	F7	43	60		500	n/a	None	A	80	Switch	Desk 0.75 to 0.85m	See Guidance Notes	n/a
		Temp Controlled Store	1	15.2	Laboratory	L1804	25	18	Radiant Panels	Remote Sensor Adj.	Yes	Ceiling Cassette - Chilled Water	Central Supply and Extract	6	6	Balanced	F7	43	60		500	n/a	None	A	80	Switch	Desk 0.75 to 0.85m	See Guidance Notes	n/a
U1	Labs	DSR	1	8.0	DSR	Y1510	28	18	Adjacent Space Transfer Air	None	No	None	Central Dirty Extract	0	10	Negative	None	43	60		100	n/a	None	A	90	Presence detection	Floor 0m	See Guidance Notes	n/a
		Record Store	1	15.0	Storage Area Equipment	W1585-??	28	16	Radiant Panels	Remote Sensor Adj.	No	None	Central General Extract	0	3	Negative	None	43	n/a		200	n/a	None	A	80	Presence detection	Floor 0m	See Guidance Notes	n/a
		Disposal Hold	1	10.0	Disposal Hold	Y0646	28	18	Adjacent Space Transfer Air	None	No	None	Central Dirty Extract	0	10	Negative	None	43	n/a		100	n/a	None	A	90	Presence detection	Floor 0m	See Guidance Notes	n/a
		Meeting/Staff	1	16.0	Meeting Room	H1313-03	25	18	Radiant Panels	Remote Sensor Adj.	Yes	Ceiling Cassette - Chilled Water	Central Supply and Extract	10 l/s per person	10 l/s per person	Balanced	G4	43	n/a		300	n/a	None	A	80	Switch	Desk 0.75 to 0.85m	See Guidance Notes	n/a
		Male Change	2	6.0	Changing Facilities	V0726	28	18	Radiant Panels	Remote Sensor Adj.	Yes	Comfort Cooled Fresh Air	Central Supply and Extract	6	10	positive to wc	G4	43	41		100	n/a	None	A	80	Presence detection	Floor 0m	See Guidance Notes	n/a
		Office	1	29.7	Cellular / Ward Offices	M0251	25	18	Radiant Panels	Remote Sensor Adj.	Yes	Comfort Cooled Fresh Air	Central Supply and Extract	4	4	Balanced	G4	43	n/a		300	n/a	None	A	80	Switch	Desk 0.75 to 0.85m	See Guidance Notes	n/a
		Staff WC	2	3.0	Toilet	V1010	28	18	Adjacent Space Transfer Air	None	No	None	Central Dirty Extract	0	10	Negative	None	43	41		200	n/a	None	A	80	Presence detection	Floor 0m	See Guidance Notes	n/a

Add value.
Inspire trust.

RHSC DCN

Review of Ventilation Provisions for (B1) PICU and HDU Departments

July 2019

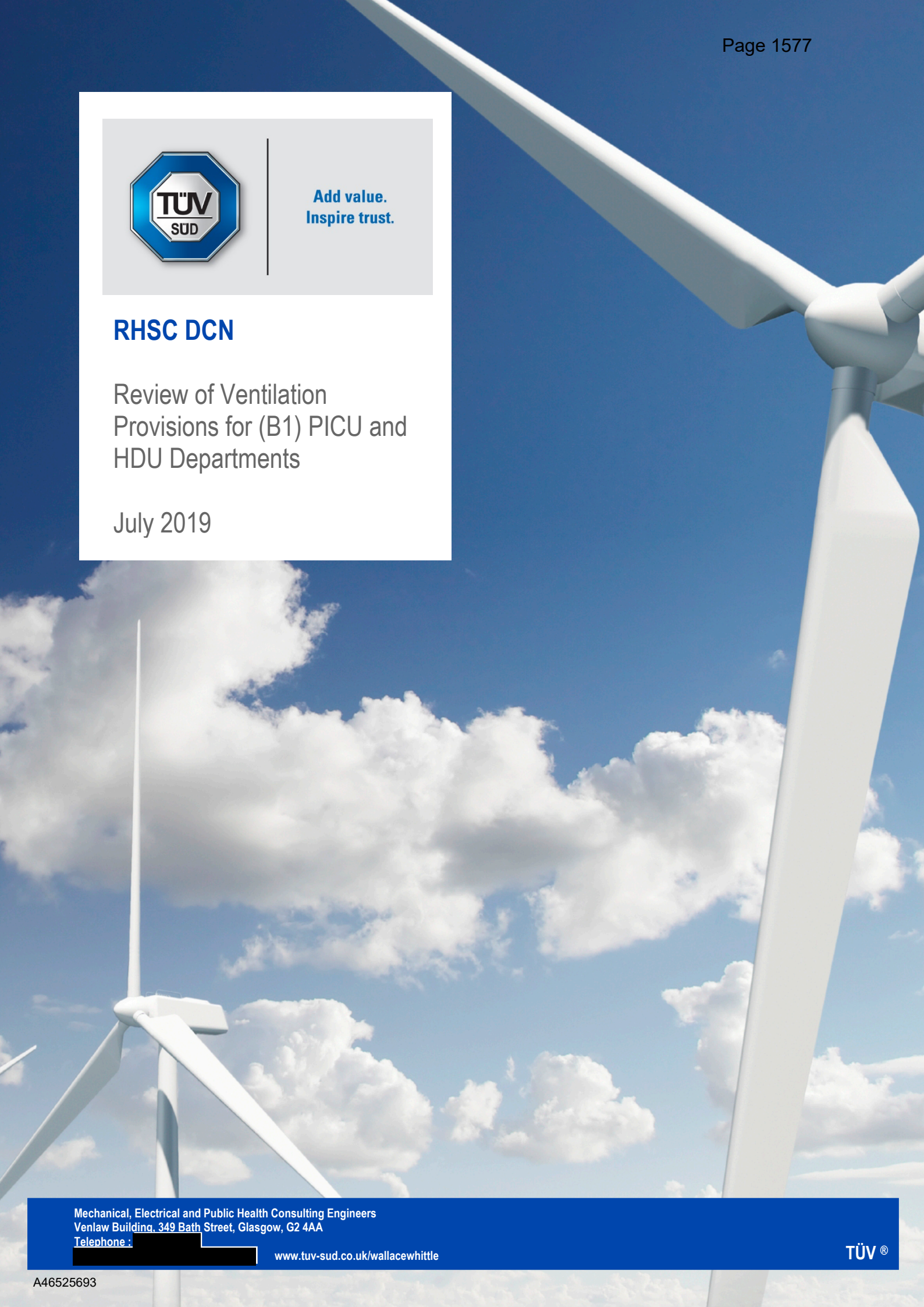

Mechanical, Electrical and Public Health Consulting Engineers
Venlaw Building, 349 Bath Street, Glasgow, G2 4AA
Telephone : [redacted]
www.tuv-sud.co.uk/wallacewhittle

Issue / Revision Record

Issue	Date	By	Checked	Comment
1	15.07.19	SMcK	BR	Issue 1

WW24i

We aim to be the pre-eminent provider of quality building services solutions and the best to work with, in the view of our clients, partners and colleagues. We believe in a sustainability led approach to design for the benefit of our clients and the world we live in.

It is our ultimate goal to work closely with our fellow professionals and clients to minimise carbon emissions and to deliver a better environment for us all to live in.

Contents

		Page
1.0	Introduction	3
2.0	Review of Relevant Standards	4
3.0	Implications of Suggested Criteria	6
4.0	Conclusions	7
5.0	Appendix	8

1.0 Introduction

Following a review of the installed ventilation systems of the Hospital NHSL have stated that the design standards for rooms: -

1 – B1 - 009	4 bed
1 – B1 - 019	1 bed
1 – B1 – 020	1 bed
1 – B1 – 021	1 bed
1 – B1 – 031	4 bed
1 – B1 – 037	1 bed
1 – B1 – 063	4 bed
1 – B1 – 065	4 bed
1 – B1 – 076	1 cot

Are not in compliance with SHTM-03-01 specifically Appendix 1 row of table as below.

Application	Ventilation	a/c hour	Pressure	Filter	Noise	Temperature	Comments
Critical care areas	S	10	+10	F7	30	18-25	Isolation Rooms may be -ve press

We have therefore carried out a full review of the standards quoted along with other requirements as briefed.

Section 2 of this report records our findings.

2.0 Review of Relevant Standards

2.1 The Clinical Output Based Specification for B1 Critical Care refers to a number of design guidance documents the ones relating to engineering services being:

HBN 23 – Hospital Accommodation for children and young people

HBN 57 – Now superseded by HBN 04 – 02 Critical Care Units

SHTM 2025 – now superseded by SHTM 03 – 01 – Ventilation for Healthcare premises

SHFN 30 Version 3 – Infection control in the built environment Design & Planning

2.2 Clinical Output Based Specification for B1 Critical Care.

In addition to the referenced document there are notes on Page 14 for "lobbied single bed isolation cubicles". This is exactly what we have provided.

Single cubicles are also mentioned but with no detailed ventilation requirements, in terms of air changes nor pressure

2.3 HBN – 04 – 02 Critical Care Units

Section 6 of this document explains the requirement for Isolation Rooms however with no particular detail of actual performance criteria, hence our RFI query and accepted guidance (25/09/15 Acconex correspondence MM-RTRFI-000088, see Appendix).

2.4 SHTM – 03 – 01 – Ventilation for Healthcare premises.

Our interpretation of the line being quoted here is that it pertains to Isolation Rooms conditions within the Critical Care Area as referenced by the Isolation Room reference in the Comments Column of Appendix 1 of SHTM 03-01.

Ward Isolation Rooms are referenced in the table as being referenced in SHPN 4 Supplement 1. This document specifically refers to design standards for Isolation Rooms with En-Suite Facilities (see Appendix).

The Isolation Rooms in the PICU and HDU areas do not have En-Suite facilities as such, there is no system performance guidance other than the line referenced in SHTM 03 – 01 which we have utilised for design.

Application	Ventilation	a/c hour	Pressure	Filter	Noise	Temperature	Comments
Critical care areas	S	10	+10	F7	30	18-25	Isolation Rooms may be -ve press

We had also, during the design period, specifically raised this with NHSL, refer to Acconex of 25/09/2015 (see Appendix) who agreed with our approach here.

2.5 SHFN 30 Version 3 – Infection Control in the Built Environment

Whilst this document gives general guidance on design principles on general design principles and practices, it doesn't specifically provide technical guidance e.g. air change rates etc. which are referenced to SHTM 2025 (superseded by SHTM 03 – 01).

2.6 Information Exchange during design process

In addition to the specific RFI re isolation rooms as previously noted we would also record that both the single and the 4 room areas have been subject of detailed review involving NHSL

Further the services levels to the rooms in question are all as per the original Client provided Environmental Matrix in terms of supply air changes with no positive pressurisation figure ever being noted.

We carried out various exercises including all parties during the Construction period when Air change rates post FBC were discussed and reviewed. The current design reflects the agreements and directions agreed from these reviews. For example refer to Acconex NHSL-GC-002953 12 April 2018 (see Appendix) where NHSL confirmed which of the 4 bed areas were to be installed to achieve 4 Air Changes, this includes rooms currently under review.

3.0 Implications of Suggested Criteria

At the meeting held on 12th July NHSL confirmed that they wished these areas to be designed to 10A/C and 10 Pa positive pressure in these rooms.

We advised at that time that if this is a definitive instruction then in our opinion extensive alterations not only to the ventilation installation but the building fabric, fittings and layouts would be necessary, including:

1) Ventilation distribution and fittings as installed is not suitable for this volume increase – Additional AHU, new ductwork, grillage, pressure currently stabilisers etc. would need to be considered. This would also impact on electrical, heating and cooling distribution systems.

2) Ceiling is unsuitable for 10 Pa and would require to be replaced

3) Windows – currently openable – are not suitable and would require replacement

4) Light fittings also unsuitable for 10 Pa, replacements required

5) Existing ceiling track and pendants would require review but possibly as unlikely to be suitable for 10 Pa

6) If 10 Pa is to be maintained in the rooms as suggested, to maintain the integrity of pressure this would require pressure loss protection at opening doors. This would normally involve some form of airlock potentially with Interlocking doors.

4.0 Conclusions

From our detailed study of available design guidance we can find no information to support the statement that compliance with SHTM 03-01 requires these room to have 10 Air Change and 10Pa positive pressurisation.

However, if it is NHSL's preference to now modify the design standards. We can of course do this, however if 10 air change is required it will require extensive alterations, replacement and additions to the ventilation systems currently installed.

Should the requirement for the additional pressure also be required then this could result in extensive remodelling of the department as per Section 3 of this report.

5.0 Appendix

The following extracts from relevant guidance documents are included these being:

1. Clinical Output Based Specification for B1 Critical Care – Page 14 & 15
2. Appendix 1 from SHTM 03 – 01
3. SHPN4 Supplement 1 – Page 5 Paragraph 2.5
4. Acconex of 25/09/2015 refers to RFI confirming services required to Isolations Rooms are in accordance with our design.
5. Acconex of 12/04/18 confirms rooms which are required to have 4 Air Changes which is in line with current provisions.

1. Clinical Output Based Specification for B1 Critical Care – Page 14 & 15

the use of art embedded within the department to ensure the department is child friendly and meets the wide age range of those attending

- All clinical areas need lighting that can be varied in intensity
- Nurse flows should be such that they can access the equipment store, the bulk supply store, a dirty utility and a clean utility within a reasonable short distance from the critical care area they are working within. A central location within critical care of these stores and utility areas is desirable
- Parent flows should be such that the parents can reach the area where their child is nursed without traversing another critical care area. If possible the parents should not need to encounter a critical care area with children who are of a higher acuity than their own child. The lowest acuity area is Neonatal Surgical HDU, then low acuity HDU, then High acuity HDU then PICU is the highest acuity area
- Flexibility in the use of the Critical Care beds for both High Dependency and Intensive Care is key to maintaining efficient use of high specification beds. All three critical care areas must be co-located
- Single cubicles will be used for privacy or isolating ordinary infectious conditions
- Maximum visibility of all Critical Care beds is essential. The bed spaces and cubicles should be arranged such that the bedside monitoring and ventilator screen is visible to staff traversing the main thoroughfare of each critical care area
- Lobbied single bed isolation cubicles are required for both source and protective isolation of patients and they all require to have identical design of pressure control with positive pressure lobbies with filtered air, and negative extraction cubicles. It is required that Contaminated air must not flow back into any of the open Critical Care areas. It is required that the lobby must be joined to the room at the foot end of the bed.
- All PICU and HDU bed spaces are required to be of the same specification to allow greatest flexibility of use
- All cubicles require glazing above 1000mm to ensure visibility of patients and patient monitoring from the thoroughfare of the unit and from adjacent cubicles
- Privacy control needs to be provided from each cubicle area. Blinds should be easy to operate and should not hinder visibility. Venetian blinds are not favoured as they impair full visibility
- All glazing units require to be able to be 'blacked' out to facilitate ultrasound procedures
- Bedhead/Pendant services are required to provide two independent gas/vacuum sources and two independent electric sources, all of which must be clearly marked.
- All Critical Care bed head/pendant services should have UPS, as should emergency lighting. There needs to be a UPS

solution to maintain electrical supply to the bed head/pendant services and emergency lighting for the period until the generator kicks in. Essential electrical socket should be attached to the emergency electrical network such as drug fridges

- It is intended to use free standing ventilators. The monitors will be mounted with tilt and swivel mounts on pendants
- There should be an oxygen, air and electric supply in the large Clean Utility (1) placed conveniently to allow the nurse to check ventilator equipment is in working order prior to returning to bed space
- Drinking water will be available throughout the area
- Wash hand basins will be required at the entrances of the unit

1.9 Design Guidance

Attention is drawn to the design guidance contained in the following documents:

- HBN 23: Hospital Accommodation for Children & Young People
- HBN 57: Facilities for Critical Care
- SHTM 2025: Ventilation
- SHFN 30: Version 3: Infection Control
- SHTM 61: Flooring
- HBN 14: Pharmacy
- Paediatric Intensive Care Society Standards Document published in 2001
- CEL 28 (2013) Medicines Storage on Hospital In-Patient Wards
- Departmental Operational Design Notes

Formatted: Bullets and Numbering
Formatted: Font: 12 pt
Formatted: Font: 12 pt
Formatted: Bullets and Numbering

1.10 Other Specifications

Lead clinical staff from Critical Care Unit must be involved with the tendering and specification of the pendant and bed head services.

2. Appendix 1 from SHTM 03 – 01

Appendix 1: Recommended air-change rates

Application	Ventilation	ac/Hour	Pressure (Pascals)	Supply Filter	Noise (NR)	Temp (°C)	Comments For further information see Section 6
General ward	S / N	6	-	G4	30	18-28	
Communal ward toilet	E	10	-ve	-	40	-	
Single room	S / E / N	6	0 or –ve	G4	30	18-28	
Single room WC	E	3	-ve	-	40	-	
Clean utility	S	6	+ve	G4	40	18-28	
Dirty utility	E	6	-ve	-	40	-	
Ward Isolation room	-	-	-	-	-	-	See SHPN 4; Supplement 1
Infectious disease Iso room	E	10	-5	G4	30	18-28	Extract filtration may be required
Neutropenic patient ward	S	10	+10	H12	30	18-28	
Critical Care Areas	S	10	+10	F7	30	*18-25*	Isolation room may be –ve press
Birthing Room	S & E	15	-ve	G4	40	*18-25*	Provide clean air-flow path
SCBU	S	6	+ve	F7	30	*18-25*	Isolation room may be –ve press
Preparation room (Lay-up)	S	>25	35	F7*	40	*18-25*	*H12 if a lay-up for a UCV Theatre
Preparation room / bay sterile pack store	S	10	25	F7	40	*18-25*	*50NR if a bay in a UCV Theatre
Operating theatre	S	25	25	F7	40	*18-25*	
UCV Operating theatre	S	25*	25	H12	40	*18-25*	Fresh air rate; excludes re-circulation
Anaesthetic room	S & E	15	>10	F7	40	*18-25*	Provide clean air-flow path
Theatre Sluice/dirty utility	E	>20	-5	-	40	-	
Recovery room	S & E	15	0	F7	35	*18-25*	Provide clean air-flow path

Table A1

© Health Facilities Scotland, a division of NHS National Services Scotland.

A46525693

Application	Ventilation	ac/Hour	Pressure (Pascals)	Supply Filter	Noise (NR)	Temp (°C)	Comments For further information see Section 6
Recovery room	S & E	15	0	F7	35	*18-25*	Provide clean air-flow path
Cardiac catheterisation lab	S	15	+ve	F7	40	*18-22*	
Endoscopy room	S	15	+ve	F7	40	*18-25*	
Endoscopy cleaning	E	>10	-ve	-	40	-	
Day case theatre	S	15	+ve	F7	40	*18-25*	
Treatment room	S	10	+ve	F7	35	*18-25*	
Pharmacy aseptic suite	S	20	#	H14	-	*18-22*	# See EGGMP (Orange guide) a
Cat 3 or 4 containment room	#	>20	#	H14*	-	*18-22*	# See ACDP guide; *Filter in extract
Post mortem room	S & E	S = 10 E = 12	-ve	G4	35	*18–22*	Provide clean air-flow path
Specimen store	E	-	-ve	-	-	-	Fan accessible from outside of store

Table A1 continued

Notes: 18°C-22°C indicates the range over which the temperature may float

18°C-22°C indicates the range over which the temperature should be capable of being controlled

S = supply N = natural ventilation

E = extract [a] – European guidelines on good manufacturing practice published by the Medicines and Healthcare products Regulatory Authority (MHRA)

© Health Facilities Scotland, a division of NHS National Services Scotland.

A46525693

3. SHPN4 Supplement 1 – Page 5 Paragraph 2.5

2. Operational policies and planning principles

The need to isolate patients

2.1 Historically, isolation in general wards has been provided in single rooms, sometimes without en-suite facilities. Rooms without en-suite facilities often cannot be used to isolate patients effectively.

2.2 Ventilated isolation suites with en-suite facilities have also been provided. They may have a ventilation system that provides a positive pressure in the room to protect the patient from infection, or a negative pressure to prevent a patient from infecting others, or the ventilation may be switchable from positive to negative. These rooms rely on staff being able to assess the type of ventilation required when a patient arrives on the ward and, for switchable systems, knowing how to select the correct ventilation mode. Patients can be put at risk by user error if the ventilation mode is not set correctly.

2.3 The provision of isolation rooms which are switchable from positive to negative air pressure is no longer recommended because of the risk of cross contamination in the event of the setting being incorrect.

2.4 There are four main reasons for caring for patients in single rooms:

- patient susceptibility to infection from other sources;
- where a patient presents an infection risk to others;
- non-medical, for example patient preference;
- clinical but not infection-related.

In terms of infection control, only patients in the first two categories require isolation. Patients in the latter two categories can be cared for in standard single en-suite rooms.

Isolation facilities

2.5 In order to simplify the use of isolation facilities, this Supplement proposes two room designs for isolating patients in acute general settings:

- enhanced single room with en-suite facilities;
- enhanced single room with en-suite facilities and ventilated bed access lobby (isolation suite).

© Health Facilities Scotland a Division of NHS National Services Scotland

4. Acconex of 25/09/2015 refers to RFI confirming services required to Isolations Rooms are in accordance with our design.

Ken

From: M Brown
Sent: 25/09/2015 11:30:31 AM BST (GMT +01:00)
To: Ken Hall
Cc: Colin Grindlay, Robert Nethery, Kelly Gordon, Kamil Kolodziejczyk, Colin MacRae, David Stillie, Fiona Halcrow, Janice Mackenzie
Mail Number: MM-RTRFI-000088
Subject: Re: Confirmation of Isolation Cubicles

Hi Ken,
The Board have reviewed your RFI and refer IHSL to the departments Clinical Output Specification that contains the relevant information with regard to the operational functionality / use of rooms and ventilation requirement. Extract from B1 PICU Clinical Output Spec noted below:

- Single cubicles will be used for privacy or isolating ordinary infectious conditions

- Lobbied single bed isolation cubicles are required for both source and protective isolation of patients and they all require to have identical design of pressure control with positive pressure lobbies with filtered air, and negative extraction cubicles. It is required that Contaminated air must not flow back into any of the open Critical Care areas. It is required that the lobby must be joined to the room at the foot end of the bed.

Furthermore the Boards response is noted in red below:

We have noted that there are rooms on the layout drawings that are labelled as Isolation Cubicles room references:-

1-B1-036, 1-B1-026, 1-B1-017 and 1-B1-016.

These rooms do not follow the standard isolation room layout as depicted within the SHPN 04 Supplement 1 and therefore we would like some guidance as to their intended use and ventilation requirements. Currently we have provided supply air into the Gowning Lobby with a pressure stabiliser in the party wall to the bedroom and a dedicated extract within the bedroom to provide a duty of 10ac/hr which will give a pressure balance.

Almost all children and infants admitted to PICU/HDU need their breathing to be supported by a ventilator. Hence en-suite facilities are not required. The proposed solution is correct and should maintain a positive pressure in the gowning lobby with respect to the corridor. The door directly into the bedroom is for patient entry/exit, with all other access and egress via the gowning lobby.

In addition to the rooms listed above, room 1-H2-021 (Single Bed 1) is not labelled as an isolation bedroom, again ventilation services confirmation required.

It should be treated as such as it is in the Clinical Research Facility.

Kind regards,

Mo

From: K Hall
Sent: 22/09/2015 2:17:20 PM BST (GMT +01:00)
To: Kamil Kolodziejczyk, Colin MacRae
Cc: Colin Grindlay, Robert Nethery, Maureen Brown
Mail Number: BMCE-RFI-000346
Subject: Fwd: Confirmation of Isolation Cubicles

Hi Colin / Kamil

Can you confirm feedback on the noted point from Wallace Whittle on ventilation within isolation cubicles.

Thanks

Ken

From: B Rutherford
Sent: 22/09/2015 12:27:18 PM BST (GMT +01:00)
To: Colin Grindlay
Cc: Ken Hall
Mail Number: WWHIT-RFI-000022
Subject: Confirmation of Isolation Cubicles

Colin,

We have noted that there are rooms on the layout drawings that are labelled as Isolation Cubicles room references:-
1-B1-036, 1-B1-026, 1-B1-017 and 1-B1-016.

These rooms do not follow the standard isolation room layout as depicted within the SHPN 04 Supplement 1 and therefore we would like some guidance as to their intended use and ventilation requirements. Currently we have provided supply air into the Gowning Lobby with a pressure stabiliser in the party wall to the bedroom and a dedicated extract within the bedroom to provide a duty of 10ac/hr which will give a pressure balance.

In addition to the rooms listed above, room 1-H2-021 (Single Bed 1) is not labelled as an isolation bedroom, again ventilation services confirmation required.

5. Acconex of 12/04/18 confirms rooms which are required to have 4 Air Changes which is in line with current provisions.

RHSC and DCN
Little France
Edinburgh
Scotland United Kingdom

NHS Lothian
56 Canaan Lane
Edinburgh
EH10 4SG United Kingdom
[redacted]

MAIL TYPE
General Correspondence
REFERENCE NUMBER
MPX-GC-026334

MAIL NUMBER
NHSL-GC-002953

Re: 12.04.18 4 Bed Workshop Summary

From	Mr Ronnie Henderson - NHS Lothian
To (4)	Mr Kamil Kolodziejczyk - Mott MacDonald Ltd (Head Office UK) (+3 more...)
Cc (2)	Mr Colin Grindlay - Multiplex Construction Europe (+1 more...)
Sent	Wednesday, 18 April 2018 9:10:44 AM BST (GMT +01:00)
Status	N/A

ATTRIBUTES

Attribute 1	Stage 3 - RHSC & DCN Construction Phase
Attribute 2	33. M&E Building Services

MESSAGE

Hi Ken,

I note the attched schedule rev 05 still refers to Air Change rates between 2.7 & 3.5, we are seeking design for 4 Air Changes to all 14 rooms. Can you confirm that this is the brief to WW

Regards

Ronnie

From: K Hall
Sent: 17/04/2018 2:52:00 PM BST (GMT +01:00)
To: Douglas Anderson, Kamil Kolodziejczyk, Ronnie Henderson, Stewart McKechnie
Cc: Colin Grindlay, Andrew McColl
Mail Number: MPX-MM-000503
Subject: 12.04.18 4 Bed Workshop Summary

Confirmation of Key Points discussed.

Add value.
Inspire trust.

Aberdeen Office
166 Great Western Road
Aberdeen, AB10 6OE
Telephone: [redacted]

Belfast Office
Arthur House, 41 Arthur Street
Belfast, BT1 4GB
Telephone: [redacted]

Ireland Office
Riverside Office Park
Unit 4D, Neil T, Blaney Road
Letterkenny, County Donegal, F92 R928
Telephone: [redacted]

Glasgow Office
Venlaw Building, 349 Bath Street
Glasgow, G2 4AA
Telephone [redacted]

London Office
22 Chapter Street
London, SW1P 4NP
Telephone: [redacted]

Warrington Office
Suite D, Chadwick House
Birchwood Park
Warrington, WA3 6AE
Telephone: [redacted]

UAE Office
Office 407, IBN Battuta Gate
PO Box 2834
Telephone: [redacted]

Hearing Commencing 26 February 2024

Bundle 2 - Documentation relating to the ventilation system in 2019